APPROVED
MAR 03 2022
BOARD OF RECREATION
AND PARK COMMISSIONERS

BOARD REPORT **NO.** 22-050

DATE March 03, 2022 C.D. 12

BOARD OF RECREATION AND PARK COMMISSIONERS

SUBJECT: GRANADA HILLS PARK – POOL AND BATHHOUSE REPLACEMENT (PRJ21109) (W.O.# E170517F) PROJECT – APPROVAL OF FINAL PLANS; CALL FOR BIDS; CATEGORICAL EXEMPTION FROM THE PROVISIONS OF THE CALIFORNIA ENVIRONMENTAL QUALITY ACT (CEQA) PURSUANT TO ARTICLE III, SECTION 1, CLASS 1(2) [MINOR ALTERATIONS OF MECHANICAL SYSTEMS SERVING EXISTING FACILITIES], CLASS 2(3) [RECONSTRUCTION OF EXISTING UTILITY FACILITIES INVOLVING NEGLIGIBLE OR NO EXPANSION OF CAPACITY] AND CLASS 11(6) [CONSTRUCTION OF MINOR STRUCTURES ACCESSORY TO INSTITUTIONAL FACILITIES] OF CITY CEQA GUIDELINES AS WELL AS TO ARTICLE 19, SECTION 15301(b),15302(c) and 15303(e) OF CALIFORNIA CEQA GUIDELINES

AP Diaz		M. Rudnick	
H. Fujita		for *C. Santo Domingo	DF
J. Kim		N. Williams	

M. Shull
General Manager

Approved X Disapproved _____ Withdrawn _____

RECOMMENDATIONS

1. Approve the final plans and specifications, substantially in the form on file in the Board of Recreation and Park Commissioners (Board) Office and as attached to this Report as Attachment 2, for the Granada Hills Park – Pool and Bathhouse Replacement (PRJ21109) (W.O. #E170517F) Project (Project);

2. Approve the Project to be bid and constructed through the Department of Recreation and Parks (RAP) As-Needed Pre-Qualified General Contractors for Park Facilities Construction – New Facility Construction (PQGC);

3. Approve the date to be advertised for receipt of bids as Wednesday, April 13, 2022 at 2:00 P.M. in the Board Office;

4. Determine that the Project is categorically exempt from the provisions of the California Environmental Quality Act (CEQA) pursuant to Article III, Section 1, Class 1(2) [Minor alterations of mechanical systems serving existing facilities] and Class 2(3) [Reconstruction of existing utility facilities involving negligible or no expansion of capacity] of City CEQA Guidelines as well as to Article 19, Section 15302(c) of California CEQA Guidelines and direct staff to file a Notice of Exemption (NOE) with the Office of Planning and Research and with the Los Angeles County Clerk; and,

5. Authorize RAP's Chief Accounting Employee or Designee to make technical corrections as necessary to carry out the intent of this Report.

SUMMARY

Granada Hills Park is located at 16730 Chatsworth Street in the Granada Hills area of the City. This 17.76-acre facility provides a variety of services and programs to the community, including baseball, basketball, soccer, a gymnasium, a swimming pool, and tennis courts. RAP staff has determined that the age and condition of the 1975 pool and bathhouse facility necessitates replacement of the pool tank and renovation of the bathhouse.

The Project scope provides improvements to the existing pool and bathhouse including:

1. Demolition of the existing 7,200 square-foot (60'x120') swimming pool and pool deck

2. Construction of:

    - New 9,000 square-foot (75'x120') swimming pool
    - New 3,100 square-foot splash pad
    - New 1,400 square-foot pool equipment pump house
    - New pathways in compliance with the Americans with Disabilities Act (ADA) requirements
    - New landscaping & irrigation around the new pool and existing bathhouse

3. Renovation of the existing bathhouse including ADA restrooms, men's and women's showers and changing areas

A community meeting was held on December 6, 2017. The community and Council District are supportive of the Project. Final plans and specifications (Attachment No. 2) were prepared by Sparano + Mooney (SMA) Architecture, Inc. (SMA), under the supervision of the Department of Public Works, Bureau of Engineering (BOE), Architectural Division.

After review by RAP and BOE staff, it was determined that the construction work can be completed by RAP's PQGC, and that BOE's Construction Management Division will provide construction management services.

The City Engineer's estimate of the Project's construction cost is Six million, Nine Hundred and Fifty Thousand Dollars ($6,950,000). The budgeted amount for construction contingency is Six Hundred and Ninety-Five Thousand Dollars ($695,000).

Funds are currently available from the following funds and accounts:

FUNDING SOURCE	FUND/DEPT./ACCT. NO.
Sunshine Canyon Trust Fund	302/89/89270K-GR
Quimby	302/89/89460K-GR

TREES AND SHADE

The Project has many established trees in the northern half of the park in proximity to the existing pool and bathhouse. Of the existing sixty-seven (67) trees identified in this portion of the park, sixteen (16) are to be removed to make room for the new pool and splash pad construction. The proposed trees to be removed are (1) Aleppo Pine, (1) Weeping Bottle Brush, (5) Carob, (1) Ash, (1) Sycamore, and (7) Podocarpus. Additionally, at the recommendation of RAP arborist six (6) other trees: (3) Mulberry, (2) Sycamore and (1) Sweetgum will be removed. None of the trees are protected trees under the Los Angeles Municipal Code. A total of thirty-two (32) new trees will be planted in the northern portion of the park to mitigate the tree removals required by the Project's construction.

The proposed new trees include eight (8) Tipu Trees *(Tipu tipuana),* three (3) Indian Rosewood Trees *(Dalbergia sissoo),* three (3) Apple Gum Trees *(Angophera costata),* four (4) Afghan Pines *(Pinus elderica),* ten (10) Pink Trumpet Trees *(Tabebuia impetiginous)* and four (4) Centennial Spirit Crape Myrtles *(Lagerstromemia* 'Centennial Spirit').

At the time of construction completion, the new trees would provide approximately 1,320 square feet of canopy coverage. At five (5) years after construction completion, it is anticipated that those trees will provide approximately 2,640 square feet of canopy coverage. Upon full maturity, the trees to be planted will have the potential of providing 50,496 square feet of canopy cover.

ENVIRONMENTAL IMPACT

The proposed Project involves minor alterations of systems serving existing facilities, reconstruction of existing utility facilities involving negligible or no expansion of capacity and construction of minor structures accessory to institutional facilities.

This site is not within a coastal, methane, or historic zone, so there is no reasonable possibility that the project may impact on an environmental resource of hazardous or critical concern. The project site is located in a high wind area. Compliance with applicable structural building design standards of existing codes and applicable specification from the most recent edition of the California Building Code, and Los Angeles Building (LABC) for wind load would reduce effects associated with high winds. No other known projects would involve cumulatively significant impacts, and no future projects would result from the proposed project. As of February 15, 2022,

the State Department of Toxic Substances Control (DTSC) (Envirostor at www.envirostor.dtsc.ca.gov) has not listed the Project site or any contaminated sites near the Project area (within 500 feet). According to the Caltrans Scenic Highway Map there is no scenic highway located within the vicinity of the project or within the project site. Furthermore, cultural resources survey was conducted *(Cultural and Paleontological Resources Assessment for the Granada Hills Pool and Bathhouse Replacement, City of Los Angeles, California,* SWCA February 2018). Based on the results of this survey, the project site does not contain historical resources. Excavation for the project will occur in already disturbed areas and the project includes measures to manage unforeseen discovery of cultural resources.

Based on these considerations, staff recommends that the Board determine that it is categorically exempt from the provisions of the California Environmental Quality Act (CEQA) pursuant to Article III, Section 1, Class 1(2), Class 2(3) and Class 11(6) of City CEQA Guidelines as well as to Article 19, Section 15301(b), 15302(c) and 15303(e) of California CEQA Guidelines. Staff will file a Notice of Exemption with the California Office of the State Clearinghouse and with the Los Angeles County Clerk upon Board's approval.

FISCAL IMPACT

The proposed construction is fully funded by the Sunshine Canyon Trust Fund and Quimby funds. There will be no fiscal impact to RAP's General Fund associated with the Project. Operations and maintenance costs will be evaluated and included in future RAP annual budget requests.

STRATEGIC PLAN INITIATIVES AND GOALS

Approval of this Board Report advances RAP's Strategic Plan by supporting:

Goal No. 2: Offer Affordable and Equitable Recreational Program
Outcome No. 1: Improved health and social equity for young Angelino's

This Report was prepared by Alex Ngo, Project Manager, BOE Architectural Division; reviewed by Steven Fierce, Principal Architect, BOE Architectural Division; Deborah Weintraub, BOE Chief Deputy City Engineer; Sean Phan Civil Engineer, Planning, Maintenance and Construction Branch and Darryl Ford, Superintendent, Planning, Maintenance and Construction Branch.

LIST OF ATTACHMENTS

Attachment No. 1 – CEQA Notice of Exemption
Attachment No. 2 – Bid Package with Final Plans and Specifications

COUNTY CLERK'S USE

ATTACHMENT NO. 1

CITY OF LOS ANGELES
OFFICE OF THE CITY CLERK
ROOM 395, CITY HALL
LOS ANGELES, CALIFORNIA 90012
CALIFORNIA ENVIRONMENTAL QUALITY ACT

CITY CLERK'S USE

NOTICE OF EXEMPTION

(Articles II and III – City CEQA Guidelines)

Submission of this form is optional. The form shall be filed with the County Clerk, 12400 E. Imperial Highway, Norwalk, California, 90650, pursuant to Public Resources Code Section 21152(b). Pursuant to Public Resources Code Section 21167(d), the filing of this notice starts a 35-day statute of limitations on court challenges to the approval of the project.

LEAD CITY AGENCY AND ADDRESS: City of Los Angeles
c/o Los Angeles City Engineer
1149 S. Broadway, MS 939
Los Angeles, CA 90015

COUNCIL DISTRICT
12

PROJECT TITLE: Granada Hills Pool & Bathhouse Replacement
CIP No. G1004
W.O. E170517B

LOG REFERENCE

PROJECT LOCATION: The proposed project is located at 16730 Chatsworth Street in Granada Hills, Los Angeles, within the Granada Hills Recreation Center (Center). The Center is located in the southeastern corner of Chatsworth Street and Petit Avenue as shown in Figure 1, Project Site Map. Improvements will take place at the existing swimming pool and the bathhouse as shown in Figure 2, Project Layout Map.

T.G. 501 D3

DESCRIPTION OF NATURE, PURPOSE, AND BENEFICIARIES OF PROJECT. The proposed project would demolish and replace the existing swimming pool, pool deck, pool equipment; refurbish the existing bathhouse; and construct a new splash pad adjacent to the pool fence. The proposed project will benefit park patrons and would be operated by the Department of Recreation and Parks. The existing bathhouse building will require full Americans with Disabilities Act (ADA), seismic, fire-life-safety, and other code compliance upgrades.

CONTACT PERSON
Shilpa Gupta

TELEPHONE NUMBER
213-485-4560

EXEMPT STATUS: (Check One)

	CITY CEQA GUIDELINES	STATE CEQA GUIDELINES
☐ MINISTERIAL	Art. II, Sec. 2.b	Sec. 15268
☐ DECLARED EMERGENCY	Art. II, Sec. 2.a(1)	Sec. 15269(a)
☐ EMERGENCY PROJECT	Art. II, Sec. 2.a(2)	Sec. 15269(b)(c)
☐ GENERAL EXEMPTION	Art. II, Sec. 1	Sec. 15061(b)(3)
☒ CATEGORICAL EXEMPTION*	Art. III, Sec. 1 Class 1 Cat. 2 Art. III, Sec. 1 Class 2 Cat. 3	Sec. 15301(b) Sec. 15302(c)
☐ STATUTORY*	Art. _____	Sec. _____

* See Public Resources Code Sec. 21080 and set forth state and city guidelines provisions.

JUSTIFICATION FOR PROJECT EXEMPTION: This project falls under State CEQA Guidelines Section 15301 (b) as well as under *City of Los Angeles CEQA Guidelines* Art. III Class 1, Cat.2, and under State CEQA Guidelines Section 15302(c) as well as under *City of Los Angeles CEQA Guidelines* Art. III Class 2, Cat.3, because the proposed project involves the reconstruction and rehabilitation of existing pool and bathhouse along with a new splash pad with no expansion of the facility. None of the limitations set forth in State CEQA61idelines 15300.2 apply (See attached narrative).

SIGNATURE:	TITLE:	DATE:
Maria Martin	Environmental Affairs Officer Environmental Management Group	3/2/18

FEE:	RECEIPT NO.	REC'D BY	DATE
$75.00			

DISTRIBUTION: (1) County Clerk (2) City Clerk (3) Agency Record

ATTACHMENT NO. 2

BUREAU OF ENGINEERING
DEPARTMENT OF PUBLIC WORKS
CITY OF LOS ANGELES

GRANADA HILLS POOL AND BATHHOUSE REPLACEMENT PROJECT



BUREAU OF ENGINEERING
OFFICIAL RECORD

PROJECT TEAM

CLIENT:
CITY OF LOS ANGELES
DEPARTMENT OF RECREATION AND PARKS
CONTACT: MICHAEL A. SHULL
GENERAL MANAGER
(213) 202-2700

221 N FIGUEROA STREET, SUITE 350
LOS ANGELES, CA 90012

PROJECT MANAGEMENT:
CITY OF LOS ANGELES
DEPARTMENT OF PUBLIC WORKS
BUREAU OF ENGINEERING
ARCHITECTURAL DIVISION
CONTACT: ALEXANDER D. NGO, ARCHITECT
PROJECT MANAGER
alex.ngo@lacity.org
(213) 485-4821

1149 S. BROADWAY, SUITE 830
LOS ANGELES, CA 90015

ARCHITECT:
SPARANO + MOONEY ARCHITECTURE
642 MOULTON AVE, STUDIO W4
LOS ANGELES, CA 90031

CONTACT: LUDWING JUAREZ
(323) 221-6600

CIVIL ENGINEER:
VCA ENGINEERS, INC.
1041 SOUTH GARFIELD AVE., SUITE 210
ALHAMBRA, CA 91801

CONTACT: EDDIE GREFIEL, ENV. S.P.
(323) 729-6043

LANDSCAPE ARCHITECT:
WITHERS & SANDGREN
20948 TULSA STREET
CHATSWORTH, CA 91311

CONTACT: JAN SANDGREN, LEED AP
(818) 291-0200

STRUCTURAL ENGINEER:
VCA ENGINEERS, INC.
1041 SOUTH GARFIELD AVE., SUITE 210
ALHAMBRA, CA 91801

CONTACT: YOUNG NAM, S.E. P.E.
(323) 729-6098

MECHANICAL ENGINEER:
MAROKO & SHWE, INC.
1106-B WEST MAGNOLIA BLVD
BURBANK, CA 91506

CONTACT: JAMES SHWE, P.E.
(818) 840-0280
CONTACT: NICK WANG
(818) 840-0280

PLUMBING ENGINEER:
MAROKO & SHWE, INC.
1106-B WEST MAGNOLIA BLVD
BURBANK, CA 91506

CONTACT: JAMES SHWE, P.E.
(818) 840-0280
CONTACT: SANDA CHU
(818) 840-0280

ELECTRICAL ENGINEER:
SILVER ROTH AND ASSOCIATES
511 S. FAIRFAX AVENUE
LOS ANGELES, CA 90036

CONTACT: FELIX ROTH, P.E.
(323) 933-3700

AQUATICS DESIGN:
AQUATIC DESIGN GROUP
2226 FARADAY AVENUE
CARLSBAD, CA 92008

CONTACT: GREG CANNON
(760) 444-8302

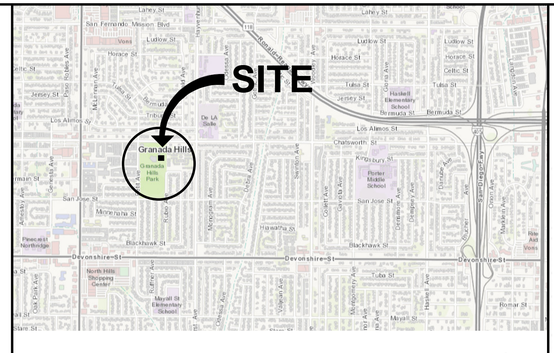

(THOMAS GUIDE PAGE 501, GRID D3)
VICINITY MAP

NOT TO SCALE

BID SET
PROJECT ISSUE DATE: 06/22/21

THE CITY OF LOS ANGELES OR ITS OFFICERS OR AGENTS SHALL NOT BE RESPONSIBLE FOR THE ACCURACY OR COMPLETENESS OF ELECTRONIC COPIES OF THIS PLAN SHEET.

TTLB TEMPLATE REVISION DATE: 08/2014
SHEET ISSUE DATE: 11/22/17
FILE PATH: BIM 360://Granada Hills Pool Renovation/A_Granada-Hills_2017.rvt

REVISION DATES (DESIGN STAGE ONLY)

BUREAU OF ENGINEERING
ENGINEERING
CITY OF LOS ANGELES

NO.	REVISION DESCRIPTION	DATE	BY

WORK ACCEPTED: ---
SERIAL NO. ---
BUILDING NO. --
INDEX NO. RP-300118

REGISTERED PROFESSIONAL ENGINEER
GARY LEE MOORE
No. C-49446
CIVIL
STATE OF CALIFORNIA

DEPARTMENT OF PUBLIC WORKS
GARY LEE MOORE, PE, ENV SP
CITY ENGINEER
ACCEPTED BY:
Electronically Signed by Deborah Weintraub on 09/13/2021 4:39:59 PM
9/13/2021
DATE:
Gary Lee Moore
Electronically signed by 23866
09/14/2021
DATE:
CITY ENGINEER

CITY OF LOS ANGELES
VERTICAL CONTROL:
HORIZONTAL CONTROL:
SHEET TITLE: COVER SHEET
PROJECT: GRANADA HILLS POOL AND BATHHOUSE REPLACEMENT PROJECT
ADDRESS: 16730 CHATSWORTH STREET GRANADA HILLS, CA 91344

WORK ORDER NO. #E170517
PLAN FILE NO. #308
DRAWING NO. G0.10
SHEET OF SHEETS

PLOTTED:8/18/2020 1:25:32 PM

SCOPE OF WORK

1. BATHHOUSE BUILDING RENOVATION-PERMIT # 18014-10001-06569

   -DEMOLITION OF EXISTING INTERIOR WALLS, ELECTRICAL DEVICES, FIXTURES, AND JUNCTION BOXES, WITH ASSOCIATED CONDUIT AND CONDUCTORS, PLUMBING FIXTURES WITH ASSOCIATED LINES AND VALVES, CONCRETE FLOOR, AND CEILINGS AS DESCRIBED WITHIN THE ATTACHED DOCUMENTS.

   -DEMOLITION OF EXISTING ROOF DECK AND SHINGLES.

   -NEW CONSTRUCTION AS DESCRIBED WITHIN THE ATTACHED DOCUMENTS.

2. SWIMMING POOL AND DECKING REPLACEMENT

   -DEMOLITION OF EXISTING POOL, CONCRETE DECKING, STORMDRAIN CATCHBASINS AND ASSOCIATED LINES UNDERNEATH INCLUDING ELECTRICAL CONDUIT AND CONDUCTORS UNDERNEATH DECK AS DESCRIBED WITHIN THE ATTACHED DOCUMENTS.

   -NEW SWIMMING POOL AND SPLASH PAD-UNDER SUPPLEMENTAL PERMIT TO # 18014-10001-06569

   -NEW CONSTRUCTION AS DESCRIBED WITHIN THE ATTACHED DOCUMENTS.

3. POOL EQUIPMENT BUILDING REPLACEMENT

   -DEMOLITION OF EXISTING POOL EQUIPMENT BUILDING IN ITS ENTIRETY, INCLUDING FOOTINGS AND FOUNDATIONS.- UNDER SEPARATE PERMIT# 19019-10000-00213.

   -STRUCTURAL BACK FILL FOR NEW CONSTRUCTION AS DESCRIBED WITHIN THE ATTACHED DOCUMENTS

   -NEW CONSTRUCTION- UNDER PERMIT# 18010-10000-05541- AS DESCRIBED WITHIN THE ATTACHED DOCUMENTS.

4. PROVIDE NEW, PROPERLY DRAINING FLOOR FOR POOL DECK AND WITHIN BUILDINGS.
5. NEW SHADE CANOPY STRUCTURES- UNDER PERMIT# 18010-10000-05542
6. MECHANICAL, PLUMBING AND ELECTRICAL UNDER SEPARATE PERMITS.

GENERAL NOTES

1. ALL WORK SHALL CONFORM TO & BE IN FULL & COMPLETE COMPLIANCE WITH CITY OF LOS ANGELES STANDARDS, REGULATIONS, ORDINANCES, AND ADOPTED CODES.
2. THE CONTRACTOR SHALL VERIFY DIMENSIONS AND EXISTING CONDITIONS AT THE PROJECT SITE PRIOR TO BID SUBMITTAL AND START OF CONSTRUCTION. CONTRACTOR SHALL NOTIFY SPARANO + MOONEY ARCHITECTURE OF ANY DISCREPANCIES FOR CLARIFICATIONS.
3. CONTRACTOR IS TO NOTIFY SPARANO + MOONEY ARCHITECTURE IF IT IS DETERMINED THAT THERE ARE CONFLICTS THAT PREVENT THE EXECUTION OF THE CONSTRUCTION DOCUMENTS AS DRAWN.
4. IF CONTRADICTIONS ARE FOUND WITHIN THE DESIGN, THE CONTRACTOR SHALL BID THE MORE EXPENSIVE OPTION AND SUBMIT THIS FINDING TO THE ARCHITECT AS PART OF THE BID FOR REVIEW.
5. THE CONTRACTOR SHALL IDENTIFY CRITICAL DUE DATES FOR OWNER SELECTIONS TO BE PURCHASED AND INSTALLED BY THE CONTRACTOR.
6. CONTRACTOR SHALL PROVIDE PROTECTION DURING CONSTRUCTION INCLUDING WITHOUT LIMITATION IN ACCORDANCE WITH THE CODES & REGLATIONS OF GOVERNING AGENCY.
7. CONTRACTOR SHALL NOT SCALE THE DRAWINGS. DIMENSIONS OF THE FLOOR PLANS ARE SHOWN TO FACE OF STUD AND OUTSIDE OF FOUNDATION SILL UNLESS NOTED OTHERWISE.
8. CONTRACTOR SHALL SUBMIT SHOP DRAWINGS & COMPLY WITH SAMPLE SUBMITTAL REQUIREMENTS AS REQUIRED BY SPECIFICATIONS.
9. CONTRACTORS SHALL BE RESPONSIBLE FOR CORRECTION OF WORK AT THEIR OWN EXPENSE FOR WORK INSTALLED IN CONFLICT WITH THE CONSTRUCTION DOCUMENTS.
10. CONTRACTOR SHALL CHECK & VERIFY SIZE & LOCATION OF DUCT OPENINGS & PLUMBING RUNS WITH MECHANICAL CONTRETE SLAB OR FRAMING SAID OPENINGS. DUCT OPENINGS IN FIRE RATED WALLS SHALL HAVE FIRE DAMPERS. SEAL BETWEEN DUCTS & PARTITION WHERE REQUIRED.
11. CONTRACTOR SHALL PROVIDE AND LOCATE ACCESS PANELS AS REQUIRED AFTER INSTALLATION OF MECHANICAL DUCTS, PLUMBING AND ELECTRICAL WORK. SPARANO + MOONEY ARCHITECTURE SHALL APPROVE LOCATION PRIOR TO INSTALLATION.
12. CONTRACTOR SHALL PROVIDE ALL NECESSARY BLOCKING, STIFFENERS, BRACING, FRAMING, HANGERS, OR OTHER SUPPORT FOR ALL FIXTURES, EQUIPMENT, CABINETRY, FURNISHINGS AN ALL OTHER ITEM REQUIRING THE SAME.
13. CONTRACTOR SHALL COORDINATE THE INSTALLATION OF OWNER PURCHASED APPLIANCES AND EQUIPMENT WITH ADJACENT, ASSOCIATED WORK SUCH AS BUT NOT LIMITED TO CABINETRY, FRAMING, LIGHTING, AND WASTE AND DRAINAGE PIPING.
14. FIRE RESISTANT CONSTRUCTION REQUIREMENTS SHALL BE ADHERED TO. OCCUPANCY SEPARATIONS & OPENINGS IN SEPARATION SHALL CONFORM TO APPLICABLE CODES (SEE COVER SHEET).
15. GLAZED OPENINGS WITHIN 40" OF THE DOOR LOCK WHEN THE DOOR IS IN THE CLOSED POSITION SHALL BE FULLY TEMPERED.
16. GLASS DOORS, ADJACENT PANELS AND ALL GLAZED PANELS WITHIN 18" OF THE FLOOR, SHALL BE TEMPERED GLASS OR OTHER BUILDING CODE ACCEPTED SAFETY GLASS.
17. PROVIDE FLASHING AND COUNTER FLASHING AT ALL EXTERIOR OPENINGS THAT ARE EXPOSED TO THE WEATHER AND ALL VALLEY'S RIDGES, AND JUCITONS BETWEEN EXPOSED HORIZONTAL AND VERTICAL SURFACES.
18. ALL WOOD IN DIRECT CONTACT WITH CONCRETE SHALL BE PRESSURE TREATED WITH AN APPROVED PRESERVATIVE.
19. ALL EXCAVATION AND GRADING WORK SHALL COMPLY WITH THE BUILDING CODE.
20. SWINGING DOORS AND WINDOWS TO THE EXTERIOR OR TO UNCONDITIONED SPACES SHALL BE FULLY WEATHERSTRIPPED, OR OTHERWISE TREATED TO LIMIT AIR INFILTRATION.
21. CONTRACTOR SHALL COORDINATE SIZE AND LOCATION OF LIGHT FIXTURES BEFORE FRAMING CEILINGS.
22. PROVIDE SHOP DRAWINGS AS REQUIRED BY SPECIFICATIONS ON THIS SHEET.
23. CLEAN UP JOBSITE, REMOVE DEBRIS & TRASH ON DAILY BASIS.
24. MAINTAIN AN ORDERLY, CLEAN, SAFE AND EFFICIENT JOBSITE AT ALL TIMES.
25. AT COMPLETION OF JOB, CONTRACTOR SHALL PROVIDE FINAL CLEANING FOR ALL NEW AND ANY EXISTING
26. SECURITY TO BE PROVIDED AND

LADBS GENERAL REQUIREMENTS

1. SKYLIGHTS SHALL COMPLY WITH AN APPROVED ICC EVALUATION REPORT OR LOS ANGELES CITY RESEARCH REPORT.
2. UNIT SKYLIGHTS SHALL BE LABELED BY AN LA CITY APPROVED LABELING AGENCY. SUCH LABEL SHALL STATE THE APPROVED LABELING AGENCY NAME, PRODUCT DESIGNATION AND PERFORMANCE GRADE RATING (SESEACRH REPORT NOT REQUIRED) 2405.5
3. THE CONSTRUCTION SHALL NOT RESTRICT A FIVE-FOOT CLEAR AND UNOBSTRUCTED ACCESS TO ANY WATER OR POWER DISTRIBUTION FACILITIES (POWER POLES, PULL BOXES, TRANSFORMERS, VAULTS, PUMPS, VALVES, METERS, APPURTENANCES, ETC.) OR TO THE LOCATION OF THE HOOK-UP. THE CONSTRUCTION SHALL NOT BE WITHIN TEN FEET OF ANY POWER LINES-WETHER OR NOT THE LINES ARE LOCATED ON THE PROPERTY. FAILURE TO COMPLY MAY CAUSE CONSTRUCTION DELAYS AND/OR ADDITIONAL EXPENSES.
4. AN APPROVED SEISMIC GAS SHUTOFF VALVE WILL BE INSTALLED ON THE FUEL GAS LINE ON THE DOWNSTREAM SIDE OF THE UTILITY METER AND BE RIGIDLY CONNECTED TO THE EXTERIOR OF THE BUILDING OR STRUCTURE CONTAINING THE FUEL GAS PIPING. (PER ORDINANCE 170,158) (INLCLUDES COMMERCIAL ADDITIONS AND TI WORK OVER $10,000) SEPARATE PERMIT IS REQUIRED.
5. PROVIDE ULTRA-LOW FLUSH WATER CLOSETS FOR ALL NEW CONSTRUCTION. EXISTING SHOWER HEADS AND TOILETS MUST BE ADAPTED FOR LOW WATER COMSUMPTION.
6. A COPY OF THE EVALUATION REPORT AND/OR CONDITIONS OF LISTING SHALL BE MADE AVAILABLE ON THE JOB SITE.

LADBS MEANS OF EGREES

1. EXIT SIGNS SHALL BE INTERNALLY OR EXTERNALLY ILLUMINATED.
2. EXIT SIGNS ILLUMINATED BY AN EXTERNAL SOURCE SHALL HAVE AN INTENSITY OF NOT LESS THAN 5 FOOT CANDLES (54 LUX).
3. INTERNALLY ILLUMINATED SIGNS SHALL BE LISTED AND LABELED AND SHALL BE INSTALLED IN ACCORDANCE WITH THE MANUFACTURER'S INSTRUCTIONS AND SECTION 2702.
4. EXIT SIGNS SHALL BE ILLUMINATED AT ALL TIMES.(1013.3)
5. EXIT SIGNS SHALL BE CONNECTED TO AN EMERGENCY POWER SYSTEM THAT WILL PROVIDE ILLUMIATION OF NOT LESS THAN 90 MIN. IN CASE OF PRIMARY POWER LOSS (1013.6.3)
6. EGRES DOORS SHALL BE READILY OPENABLE FROM THE EGRESS SIDE WITHOUT THE USE OF A KEY OR SPECIAL KNOWLEDGE OR EFFORT. SEE 1010.1.9.3 FOR EXCEPTIONS.
7. DOOR HANDLES, LOCK AND OTHER OPERATIONG DEVICES SHALL BE INSTALLED AT MIN. 34" AND A MAX. 48" ABOVE THE FINISHED FLOOR.
8. THIS DOOR TO REMAIN UNLOCKED WHEN BUILDING IS OCCUPIED.
9. ALL EGREES DOOR OPERATION SHALL ALSO COMPLY WITH SECTION 1010.1.9 AND 1010.9.12
10. THE MEANS OF EGREES, INCLUDING THE EXIT DISCHARGE, SHALL BE ILLUMINATED AT ALL TIMES THE BUILDING SPACE SERVED BY THE MEANS OF EGREES IS OCCUPIED.
11. THE MEANS OF EGREES ILLUMINATION LEVEL SHALL NOT BE LESS THAN 1 FOOT-CANDLE AT THE WALKING SURFACE.
12. THE POWER SUPPLY FOR MEANS OF EGREES ILLUMINATION SHALL NORMALLY BE PROVIDED BY THE PREMISESELECTRICAL SUPPLY. IN THE EVENT OF POWER SUPPLY FAILURE, AN EMERGENCY ELECTRICAL SYSTEM SHALL AUTOMATICALLY ILLUMINATE THE FOLLOWING AREAS:
    A. AISLES AND UNENCLOSED EGRESS STAIRWAYS IN ROOMS AND SPACES THAT REQUIRE TWO OR MORE MEANS OF EGREES.
    B. CORRIDORS, EXIT ENCLOSURES AND EXIT PASSAGEWAYS IN BUILDINGS REQUIRED TO HAVE TWO OR MORE EXITS.
    C. EXTERIOR EGREES COMPONENTS AT OTHER THAN THE LEVEL OF EXIT DISCHARGE UNTIL EXIT DISCHARGE IS ACCOMPLISHED FOR BUILDINGS REQUIRED TO HAVE TWO OR MORE EXITS.
    D. INTERIOR EXIT DISCHARGE ELEMENTS, AS PERMITTED IN SECTION 1028.1, IN BUILDINGS RQUIRED TO HAVE TWO OR MORE EXITS.
    E. EXTERIOR LANDINGS, AS REQUIRED BY SECTION 1010.1.6. FOR EXIT DISCHARGE DOORWAYS IN BUILSINGS REQUIRED TO HAVE TWO OR MORE EXITS.
13. THE EMERGENCY POWER SYSTEM SHALL PROVIDE POWER FOR A DURATION OF NOT LESS THAN 90 MINUTES AND SHALL CONSIST OF STORAGE BATTERIES, UNIT EQUIPMENT OR AN ON-SITE GENERATOR. THE INSTALLATION OF THE EMERGENCY POWER SYSTEM SHALL BE IN ACCORDANCE WITH SECTION 2702.
14. EMERGENCY LIGHTING FACILITIES SHALL BE ARRANGED TO PROVIDE INITIAL ILLUMINATION THAT IS AT LEAST AN AVERGAE OF 1 FOOT-CANDLE (11 LUX) AND A MINIMUM AT ANY POINT OF 0.1 FOOT CANDLE (1 LUX) MEASURED ALONG THE PATH OF EGREES AT FLOOR LEVEL. ILLUMINATION LEVELS SHALL BE PERMITTED TO DECLINE TO 0.6 FOOT-CANDLE (6 LUX) AVERAGE AND A MINIMUM AT ANY POINT OF 0.06 FOOT-CANDLE (0.6 LUX) AT THE END OF THE MERGENCY LIGHTING TIME DURATION. A MAXIMUM-TO-MIMIMUM ILLUMINATION UNIFORMITY RATIO OF 40 TO 1 SHALL NOT BE EXCEEDED.

BUILDING NOTES

1. NO HAZARDOUS MATERIALS TO BE STORED AND/ OR USED WITHIN THE BUILDING
2. CALL DIG ALERT BEFORE ANY TRENCHING (800) 227-2600

DIAL BEFORE YOU DIG
1-800-227-2600
DIGALERT
PLAY IT SAFE. DIAL BEFORE YOU DIG!
AT LEAST TWO WORKING DAYS PRIOR TO EXCAVATING
SERVING NINE SOUTHERN CALIFORNIA COUNTIES

DRAWING INDEX

GENERAL
G0.10 COVER SHEET
G0.20 DRAWING INDEX, PROJECT DATA
G0.21 CODE ANALYSIS AND EGRESS PLAN
G0.22 SOILS REPORT APPROVAL LETTERS
G0.23 SOILS REPORT APPROVAL LETTERS
G0.30 SYMBOLS AND ABBREVIATIONS
G0.40 ACCESSIBILITY NOTES
G0.41 ACCESSIBILITY NOTES
G0.42 ACCESSIBILITY NOTES
G0.45 GREEN BUILDING CODE SUPPPLEMENTAL FORMS
G0.46 GREEN BUILDING CODE SUPPLEMENTAL FORMS
G0.47 GREEN BUILDING CODE SUPPLEMENTAL FORMS
G0.50 PLOT PLAN

CIVIL
1 SITE SURVEY
2 SITE SURVEY
C1.00 GENERAL NOTES, LEGEND, AND ABBREVIATIONS
C1.01 GENERAL NOTES, LEGEND, AND ABBREVIATIONS
CD1.01 DEMOLITION PLAN
C2.00 SITE CONTROL PLAN
C3.00 GRADING PLAN
C3.01 ENLARGED GRADING PLAN
C3.02 GRADING PLAN
C3.03 GRADING SECTIONS
C4.00 UTILITY PLAN
C4.01 LID PLAN
C5.00 MISCELLANEOUS DETAILS
C5.01 MISCELLANEOUS DETAILS
C5.02 MISCELLANEOUS DETAILS
C5.03 MISCELLANEOUS DETAILS
C5.04 MISCELLANEOUS DETAILS
C5.05 MISCELLANEOUS DETAILS
C5.06 MISCELLANEOUS DETAILS
C6.00 EROSION CONTROL PLAN
C6.01 MISCELLANEOUS DETAILS

LANDSCAPE
L-0.10 TREE CANOPY ANALYSIS
L-0.20 EXISTING IRRIGATION DEMOLITION PLAN
L-1.00 IRRIGATION AS-BUILT
L-1.01 IRRIGATION PLAN
L-1.02 IRRIGATION PLAN
L-1.50 IRRIGATION DETAILS
L-2.00 TREE PLANTING PLAN
L-2.01 SHRUB PLANTING PLAN
L-2.50 LANDSCAPE DETAILS

ARCHITECTURAL
A0.01 AS-BUILT A-1
A0.02 AS-BUILT A-2
A0.03 AS-BUILT A-3
A0.04 AS-BUILT A-4
A0.05 AS-BUILT A-5
A0.06 AS-BUILT A-6
A0.07 AS-BUILT A-7
A0.08 AS-BUILT A-8
A0.09 AS-BUILT A-10
A0.10 AS-BUILT S-1
A0.11 AS-BUILT S-2
A0.12 AS-BUILT S-3
A0.13 AS-BUILT S-4
A0.14 AS-BUILTS P-1 1970
A0.15 AS-BUILTS P-3 1970
A0.16 AS-BUILTS P-4 1970
A0.17 AS-BUILTS E-2 1961
A0.18 AS-BUILTS XE-6 1970
A0.19 AS-BUILTS E1.2 1998
A0.20 AS-BUILTS E2.2 1998
A1.10 FACILITY SITE PLAN
A2.00 DEMOLITION PLAN
A2.10 FACILITY FLOOR PLAN
A2.11 ROOF PLANS
A2.12 CONTROL JOINT DECK PLAN
A2.13 CONTROL JOINT SITE PLAN
A2.14 CONTROL JOINT SITE PLAN
A2.15 CONTROL JOINT SITE PLAN
A2.16 SLAB AND CURB CONTROL PLAN
A3.10 RENOVATED ENLARGED PLANS
A3.11 RENOVATED ENLARGED PLANS
A3.12 TOILET STALL TYPES AND ACCESSORIES
A3.50 REFLECTED CEILING PLANS
A3.51 REFLECTED CEILING PLANS
A4.10 EXTERIOR ELEVATIONS
A4.11 ENLARGED EXTERIOR ELEVATIONS
A4.50 INTERIOR ELEVATIONS
A4.51 INTERIOR ELEVATIONS
A4.52 INTERIOR ELEVATIONS
A4.53 INTERIOR ELEVATIONS
A5.10 BUILDING SECTIONS
A5.11 BUILDING SECTIONS
A5.12 BUILDING SECTIONS
A6.10 WALL SECTIONS
A6.11 WALL SECTIONS
A6.12 WALL SECTIONS
A7.00 WALL TYPES AND DETAILS
A7.10 SITE DETAILS
A7.11 SITE DETAILS
A7.12 SITE DETAILS
A7.13 TRASH AND RECYCLING ENCLOSURE PLANS & DETAILS
A7.20 ROOF DETAILS
A7.30 EXTERIOR DETAILS
A7.31 EXTERIOR DETAILS
A7.32 EXTERIOR DETAILS
A7.50 INTERIOR DETAILS
A7.51 INTERIOR DETAILS
A7.60 TYPICAL CEILING DETAILS
A8.10 DOOR SCHEDULE
A8.11 DOOR AND WINDOW DETAILS
A8.12 WINDOW TYPES
A8.50 FINISH SCHEDULE

STRUCTURAL
S0.01 GENERAL NOTES
S0.02 GENERAL NOTES
S0.03 GENERAL NOTES
S1.01 TYPICAL DETAILS
S1.02 TYPICAL DETAILS
S1.03 TYPICAL DETAILS

DRAWING INDEX (CONTINUE)

S1.04 TYPICAL DETAILS
S1.04A TYPICAL DETAILS
S1.05 TYPICAL DETAILS
S1.06 TYPICAL DETAILS
S2.00 OVERALL SITE PLAN
S2.01 FOUNDATION PLAN
S3.01 ROOF FRAMING PLAN
S3.02 CANOPY FOUNDATION AND ROOF FRAMING PLANS
S3.03 RAMP FOUNDATION PLAN
S4.01 FOUNDATION DETAILS
S4.02 FOUNDATION DETAILS
S4.03 FOUNDATION DETAILS
S4.04 FOUNDATION DETAILS
S5.01 FRAMING DETAILS
S5.02 FRAMING DETAILS
S6.01 ELEVATIONS
S6.02 SECTIONS

MECHANICAL
M0.01 LEGENDS, NOTES, AND SHEET INDEX
M0.11 SCHEDULES
M0.20 TITLE 24
M0.30 TITLE 24
M0.40 TITLE 24
M2.10 HVAC FLOOR PLANS
M2.11 HVAC ROOF PLANS
M4.10 DETAILS
M4.11 DETAILS
M4.12 DETAILS
M5.10 CONTROLS
M5.11 CONTROLS
M5.12 CONTROLS
PLUMBING
P0.10 LEGEND, GENERAL NOTES, AND SHEET INDEX
P0.11 SCHEDULES
P0.12 SCHEDULES
PSD1.01 PLUMBING SITE DEMOLITION PLAN
PS1.01 SITE PLAN
P2.00 DEMOLITION FLOOR PLAN
P2.10 FACILITY FLOOR PLAN
P2.11 ROOF PLANS
P3.10A ENLARGED FLOOR PLANS (WATER & GAS)
P3.10B ENLARGED FLOOR PLANS (WASTE & VENT)
P3.11A ENLARGED FLOOR PLANS (WATER & GAS)
P3.11B ENLARGED FLOOR PLANS (WASTE & VENT)
P3.12 MEN'S RR AND JAN - WATER PIPING LAYOUT
P3.13 MEN'S RR AND JAN - WASTE & VENT PIPING LAYOUT
P3.14 WOMEN'S RR AND JAN-WATER PIPING LAYOUT
P3.15 WOMEN'S RR AND JAN-WASTE AND VENT PIPING LAYOUT
P3.16 FAM/UNISEX-WATER PIPING LAYOUT
P3.17 FAM/UNISEX-WASTE AND VENT PIPING LAYOUT
P3.18 STAFF RR - PIPING LAYOUT
P4.11-A COLD AND HOT WATER RISER DIAGRAMS PART 1
P4.11-B COLD AND HOT WATER RISER DIAGRAMS PART 2
P4.12-A WASTE AND VENT RISER DIAGRAMS PART 1
P4.12-B WASTE AND VENT RISER DIAGRAMS PART 2
P4.13 GAS RISER DIAGRAM
P4.14 EQUIPMENT RISER DIAGRAMS
P4.15 POOL EQUIPMENT BUILDING-WASTE & VENT RISER DIAGRAM
P4.16 POOL EQUIPMENT BUILDING- GAS & STORM DRAIN RISER DIAGRAM
P5.11 DETAILS

ELECTRICAL
E0.1 GENERAL NOTES AND SPECIFICATIONS, ONE LINE DIAGRAM AND SCHEDULES
E0.2 PANEL SCHEDULES
E1.0 ELECTRICAL SITE PLAN
E1.1 ELECTRICAL DEMOLITION PLAN
E2.1 LIGHTING PLANS - BATHHOUSE AND POOL EQ. BLDG.
E2.2 EM LIGHTING POINY BY POINT CALCS-BATHHOUSE AND POOL EQ. BLDG.
E3.1 POWER AND SIGNAL PLANS- BATHHOUSE AND POOL EQ. BLDG.
E3.2 MECHANICAL EQ. POWER-BATHHOUSE AND POOL EQ. BLDG.
E3.3 MECHANICAL EQ. ROOF POWER- BATHHOUSE AND POOL EQ. BLDG.
E4.1 TITLE 24
E5.1 ELECTRICAL DETAILS
E5.2 ELECTRICAL DETAILS
E6.1 TITLE 24
E6.2 TITLE 24
FA0.1 FIRE ALARM GENERAL NOTES AND SPECIFICATIONS
FA2.1 FIRE ALARM PLANS-BATHHOUSE AND POOL EQ. BLDG.
FA3.1 FIRE ALARM DETAILS

AQUATICS
SP-1 SWIMMING POOL LAYOUT PLAN
SP-2 SWIMMING POOL PIPING PLAN
SP-3 SWIMMING POOL UNDERWATER LIGHT/TIMING SYSTEM PLAN
SP-4 SWIMMING POOL SECTIONS
SP-5 DETAILS
SP-6 DETAILS
SP-7 DETAILS
SP-8 DETAILS
SP-9 DETAILS
SP-10 DETAILS
SP-11 DETAILS
SP-12 DETAILS
SP-13 DETAILS
SP-14 DETAILS
WP-1 WET PLAY LAYOUT PLAN
WP-2 WET PLAY PIPING PLAN
WP-3 WET PLAY DETAILS
WP-4 WET PLAY DETAILS
WP-5 WET PLAY DETAILS
WP-6 WET PLAY DETAILS
MR-1 MECHANICAL ROOM LAYOUT PLAN
MR-1A WET PLAY MECHANICAL ROOM LAYOUT PLAN
MR-2 MECHANICAL ROOM DETAILS
MR-3 MECHANICAL ROOM DETAILS
MR-4 MECHANICAL ROOM DETAILS
MR-5 MECHANICAL ROOM DETAILS
MR-6 MECHANICAL ROOM DETAILS
MR-7 MECHANICAL ROOM DETAILS
MR-8 MECHANICAL ROOM DETAILS
MR-9 MECHANICAL ROOM DETAILS

ELECTRICAL MUSCO LIGHTING
ET-1(M) GENERAL NOTES
ET-2(M) FOUNDATION DETAILS
ET-7(M) 60B-3POLE/OUNDATION STANDARD
ET-12-1(M) POLE DETAILS
ET-12-2(M) POLE DETAILS
ET-12-1(M) OPTIONAL AUXILIARY MOUNTS

BUREAU OF ENGINEERING
OFFICIAL RECORD

BID SET
PROJECT ISSUE DATE: 06/22/21

CITY OF LOS ANGELES
DEPARTMENT OF PUBLIC WORKS
BUREAU OF ENGINEERING
ENGINEERING
CITY OF LOS ANGELES

NO.	REVISION DESCRIPTION	DATE	BY

BUILDING NO. -
INDEX NO. RP-300118

LICENSED ARCHITECT
JOHN P. SPARANO
No. C-26244
EXP. 1-30-21
STATE OF CALIFORNIA

CITY OF LOS ANGELES
DEPARTMENT OF PUBLIC WORKS
BUREAU OF ENGINEERING
GARY LEE MOORE, PE, ENV SP
CITY ENGINEER

	DATE:
ARCHITECTURAL DIVISION	
ARCHITECT/ENGINEER: JOHN SPARANO	LIC. NO.: C-26244
DESIGNED BY: SPARANO + MOONEY ARCHITECTURE	03/03/20
DRAWN BY: JORGE BELTRAN	03/03/20
CHECKED BY: LUDWING JUAREZ	03/03/20
APPROVED BY:	03/03/20

VERTICAL CONTROL:
HORIZONTAL CONTROL:
SHEET TITLE: DRAWING INDEX, PROJECT DATA
PROJECT: GRANADA HILLS POOL AND BATHHOUSE REPLACEMENT PROJECT
ADDRESS: 16730 CHATSWORTH STREET GRANADA HILLS, CA 91344

WORK ORDER NO. #E170517
PLAN FILE NO. #308
DRAWING NO. G0.20
SHEET 0 OF SHEETS

PLOTTED:8/18/2020 1:25:36 PM

REVISION DATES (DESIGN STAGE ONLY)

THE CITY OF LOS ANGELES OR IT'S OFFICERS OR AGENTS SHALL NOT BE RESPONSIBLE FOR THE ACCURACY OR COMPLETENESS OF ELECTRONIC COPIES OF THIS PLAN SHEET.

TTLB TEMPLATE REVISION DATE: 02/2013
SHEET ISSUE DATE: 02/09/10
FILE PATH: BIM 360://Granada Hills Pool Renovation/A_Granada-Hills_2017.rvt

PROJECT INFORMATION AND CODE ANALYSIS

APPLICABLE CODES
2017 LOS ANGELES BUILDING CODE
2016 CALIFORNIA PLUMBING CODE
2016 CALIFORNIA MECHANICAL CODE
2016 CALIFORNIA ENERGY CODE
2016 CALIFORNIA GREEN BUILDING STANDARDS CODE
2016 CALIFORNIA FIRE CODE
TITLE 24 OF THE CALIFORNIA ADMINISTRATIVE CODE
TITLE 22 OF THE CALIFORNIA HEALTH AND SAFETY CODE

ACCESSIBILITY CODES:
AMERICAN WITH DISABILITY ACT ACCESSIBILITY GUIDELINES (ADAAG)
THE CALIFORNIA ACCESS COMPLIANCE LAW (CCR, TITLE 24)

BUILDING STRUCTURE COMPONENTS

STRUCTURE:	REINFORCED CONCRETE FOOTINGS
	BRICK BEARING WALLS
	STEEL COLUMNS
	WOOD ROOF JOISTS AND DECK
EXTERIOR WALL:	FULLY GROUTED BRICK
INTERIOR PARTITIONS:	METAL STUD WALLS

SITE SUMMARY

COUNCIL DISTRICT:	CD-12
ZONE:	OS-1XL
FIRE DISTRICT:	87
LOT SIZE:	753,521 S.F.
ALLOWABLE BUILDING HEIGHT:	NONE

BUILDING SUMMARY - BATHHOUSE

BUILDING USE:	BUILDING ADMINISTRATION, LOBBY, RESTROOMS, SHOWERS, & BUILDING SUPPORT
BUILDING STORIES:	1 STORY
BUILDING HEIGHT:	11'-8"
GROSS BUILDING AREA:	4,963 S.F.
NET BUILDING AREA:	4,672 S.F.
OCCUPANCY CLASSIFICATION:	B
BUILDING CONSTRUCTION TYPE:	V-B
ALLOWABLE AREA FACTOR (PER TABLE 506.2) :	OCCUPANCY CLASS GROUP-B, TYPE V-B = 9,000 S.F.
OCCUPANCY CALCULATION (PER TABLE 1004.1.2) :	4,672 NET S.F. / 50 S.F. = 94 OCCS. TOTAL OCCUPANTS: 94
EXIT WIDTH CALCULATION OF ALTERED SPACE (SEC. 1005.3.2) :	94 OCCS. x 0.2"/OCC. = 19" (18.8") 19" REQUIRED (241" PROVIDED)
NUMBER OF EXITS (PER TABLE 1006.3.1) :	2 EXITS REQUIRED (5 EXITS PROVIDED)

BUILDING SUMMARY - POOL EQUIPMENT BUILDING

BUILDING USE:	POOL EQUIPMENT
BUILDING STORIES:	1 STORY
BUILDING HEIGHT:	14'-4"
GROSS BUILDING AREA:	1,369 S.F.
NET BUILDING AREA:	1,263 S.F.
OCCUPANCY CLASSIFICATION:	S-2
BUILDING CONSTRUCTION TYPE:	V-B
ALLOWABLE AREA FACTOR (PER TABLE 506.2) :	OCCUPANCY CLASS GROUP S-2, TYPE V-B = 13,500 S.F.
OCCUPANCY CALCULATION (PER TABLE 1004.1.2) :	1,263 NET S.F. / 300 S.F. = 5 OCCS. TOTAL OCCUPANTS: 5
EXIT WIDTH CALCULATION OF ALTERED SPACE (SEC. 1005.3.2) :	5 OCCS. x 0.2"/OCC. = 1" 1" REQUIRED (360" PROVIDED)
NUMBER OF EXITS (PER TABLE 1006.3.1) :	2 EXITS REQUIRED (5 EXITS PROVIDED)

SWIMMING POOL & POOL DECK

OCCUPANCY CLASSIFICATION:	A-5	
GROSS SQUARE FOOTAGE AREA - POOL DECK:	11,804 S.F.	
GROSS SQUARE FOOTAGE AREA - RECREATIONAL POOL:	9,110 S.F.	
OCCUPANCY CALCULATION (PER TABLE 1004.1.2) :		
POOL DECK -	11,804 S.F. / 15 S.F. = 787 OCCS.	
RECREATION POOL -	9,000 S.F. / 50 S.F. = 182 OCCS. TOTAL OCCUPANTS: 969 OCCS.	
EXIT WIDTH CALCULATION OF ALTERED SPACE (SEC. 1005.3.2) :	969 OCCS. x 0.2"/OCC. = 194" (193.8") 194" REQUIRED (245" PROVIDED)	
NUMBER OF EXITS (PER TABLE 1006.3.1) :	3 EXITS REQUIRED (4 EXITS PROVIDED)	

SANITARY FACILITY REQUIREMENTS FOR SWIMMING POOLS
(PER CHAPTER 31B-SECTION 3116B)

POOL USER CALCULATIONS

RECREATION POOL (15 S.F. PER POOL USER) :	9,110 S.F. / 15 S.F. = 607 POOL USERS		
SPLASHPAD (15 S.F. PER SPLASHPAD USER)	1,003 S.F./ 15 S.F. = 7 SPLASHPAD USERS		TOTAL : 674 USERS
TOTAL USERS FOR EACH SEX:	337 MALE ; 337 FEMALE		
REQUIRED SHOWERS (1 FIXTURE / 50 POOL USERS) :	674 P.U. / 50 P.U. = 14 FIXTURES	REQUIRED	14 SHOWERS PROVIDED
WOMEN'S TOILETS (1 FIXTURE / 60 POOL USERS) :	337 P.U. / 60 P.U. = 5 FIXTURES	REQUIRED	6 TOILETS PROVIDED
MEN'S TOILETS (1 FIXTURE / 75 POOL USERS) :	337 P.U. / 75 P.U. = 5 FIXTURES	REQUIRED	5 TOILETS PROVIDED
URINALS (1 FIXTURE / 75 POOL USERS) :	337 P.U. / 75 P.U. = 5 FIXTURES	REQUIRED	5 URINALS PROVIDED
LAVATORIES (1 FIXTURE / 80 POOL USERS) :	674 P.U. / 80 P.U. = 8 FIXTURES	REQUIRED	8 LAVATORIES REQUIRED
DRINKING FOUNTAINS (1FIXTURE FOR FIRST 250 POOL USERS, 1 FXTURE / 200 POOL USERS THEREAFTER) :	1:250 = 1 FIXTURE ; (674 P.U. - 250 P.U.) / 200 P.U. = 3 FIXTURES REQUIRED		3 DRINKING FOUNTAINS PROVIDED

ACCESSIBLE FIXTURE COUNTS (PER SECTION 11B-213.3)

1. ACCESSIBLE SHOWER COMPARTMENT:	1 REQUIRED AT EACH MULTI-FIXTURE	1 REQ. MIN. FOR SINGLE USER / UNISEX RESTROOM
2. WHEELCHAIR ACCESSIBLE COMPARTMENT:	1 REQUIRED AT EACH MULTI-FIXTURE	
3. AMBULATORY ACCESSIBLE COMPARTMENT:	1 REQUIRED AT EACH MULTI-FIXTURE	
4. ACCESSIBLE URINAL:	1 REQUIRED	
5. ACCESSIBLE LAVATORY:	1 REQUIRED AT EACH MULTI-FIXTURE	1 REQ. MIN. FOR SINGLE USER / UNISEX RESTROOM
6. ACCESSIBLE DRINKING FOUNTIAN:	2 REQUIRED	

PARKING REQUIREMENTS

OFF-STREET EXISTING PARKING COUNTS
(PER CHAPTER 31B-SECTION 3116B)
WEST PARKING COUNTS: 93 SPACES TOTAL; 5 ADA SPACES (INCLUSIVE)

SOUTH PARKING LOT: 53 SPACES TOTAL; 2 ADA SPACES (INCLUSIVE)

OFF-STREET PARKING REQUIREMENTS
(PER LAMC 12.23B.8(a) PROVIDE ADDITIONAL PARKING FOR NEW FLOOR AREA)

"ALL CURRENTLY PROVIDED PARKING SPACES SHALL BE CONSIDERED AS THE REQUIRED PARKING FOR AN EXISTING NONCONFORMING USE IF THE PARKING SPACES ARE LESS THAN OR EQUAL TO THE PARKING REQUIRED BY CURRENT REGULATIONS"

EXISTING BATHHOUSE BUILDING: 4,580 NET S.F.
RENOVATED BATHHOUSE BUILDING: 4,801 NET S.F.
NEW SQUARE FOOTAGE: 230 NET S.F.
REQUIRED PARKING (1/100 S.F.) = 1 PARKING STALL

NEW MECHANICAL BUILDING: 1,263 NET S.F.

NEW SQUARE FOOTAGE: 1,263 NET S.F.
REQUIRED PARKING (1/500 S.F.) = 3 PARKING STALLS

TOTAL REQUIRED ADDITIONAL PARKING: 4 PARKING STALLS
1 PARKING STALL PROVIDED PROVIDED AS SHOWN IN SITE PLAN
(PER LAMC 12.21A4 ABILITY TO REPLACE AUTOMOBILE PARKING WITH BICYCLE PARKING SPACES)
"NEW OR EXISTING AUTOMOBILE PARKING SPACES REQUIRED BY THE CODE FOR ALL USES MAY BE REPLACED BY BICYCLE PARKING AT A RATIO OF ONE AUTOMOBILE PARKING SPACE FOR EVERY FOUR BICYCLE PARKING SPACES PROVIDED. NOTWITHSTANDING THE FOREGOING, NO MORE THAN 20 PERCENT OF THE REQUIRED AUTOMOBILE PARKING SPACES FOR NONRESIDENTIAL USES SHALL BE REPLACED AT A SITE. AUTOMOBILE PARKING SPACES FOR NONRESIDENTIAL PROJECTS OR BUILDINGS LOCATED WITHIN 1,500 FEET OF A PORTAL OF A FIXED RAIL TRANSIT STATION, BUS STATION, OR OTHER SIMILAR TRANSIT FACILITY, AS DEFINED BY SECTION 12.24 Y., MAY REPLACE UP TO 30 PERCENT OF THE REQUIRED AUTOMOBILE PARKING SPACES WITH BICYCLE PARKING. FOR BUILDINGS WITH LESS THAN 20 REQUIRED AUTOMOBILE PARKING SPACES, UP TO 4 PARKING SPACES MAY BE REPLACED."

BICYCLE PARKING SPACES: 16 SPACES PROVIDED
IN LIEU OF 4 PARKING STALLS

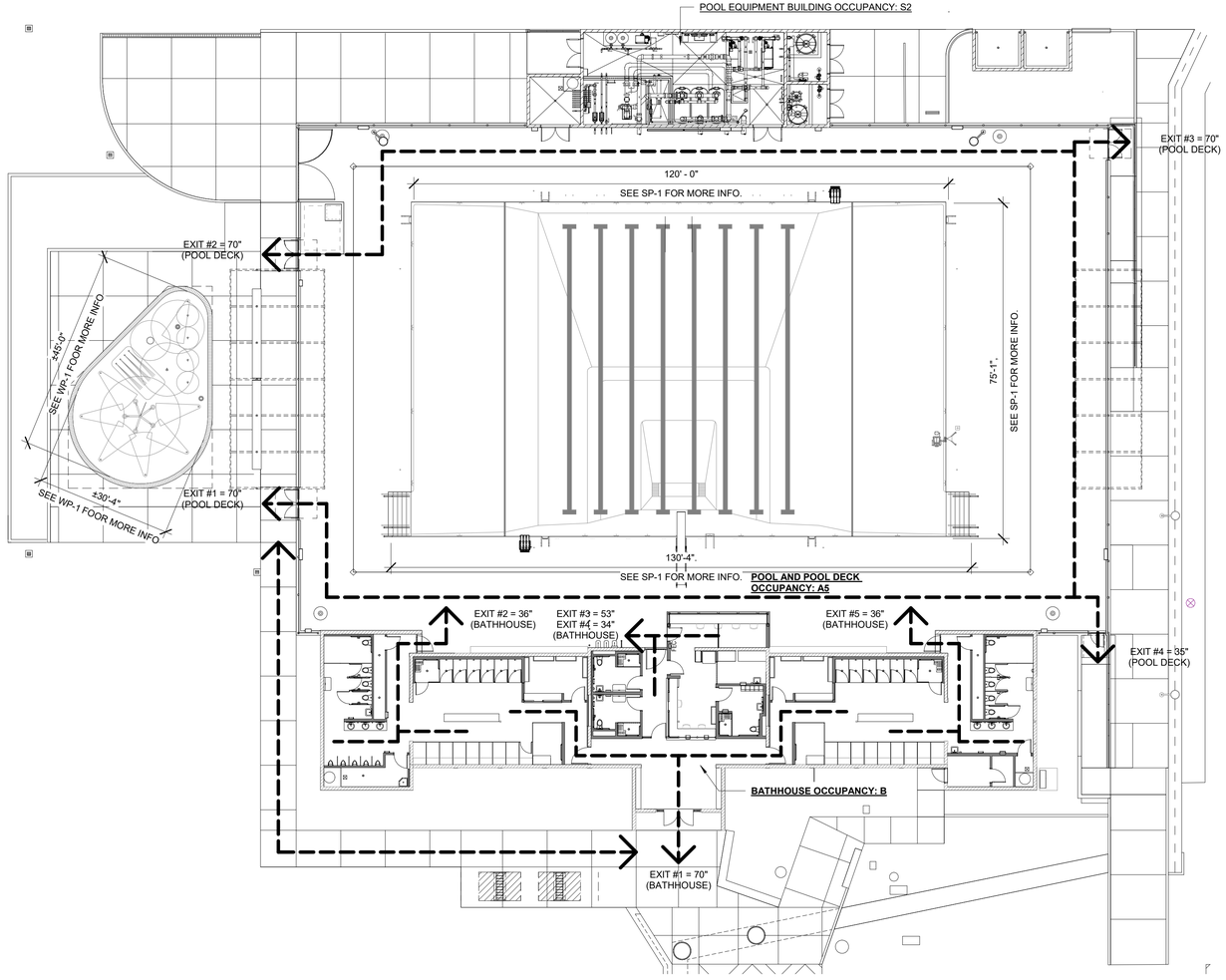

1 FACILITY FLOOR PLAN-EGRESS
1/16" = 1'-0"

MEANS OF EGRESS NOTES

1. EXIT SIGNS SHALL BE INTERNALLY OR EXTERNALLY ILLUMINATED..
2. EXIT SIGNS ILLUMINATED BY AN EXTERNAL SOURCE SHALL HAVE AN INTENSITY OF NOT LESS THAN 5 FOOT CANDLES (54 lux).
3. INTERNALLY ILLUMINATED SIGNS SHALL BE LISTED AND LABELED AND SHALL BE INSTALLED IN ACCORDANCE WITH THE MANUFACTURER'S INSTRUCTIONS AND SECTION 2702.
4. EXIT SIGNS SHALL BE ILLUMINATED AT ALL TIMES. (1013.3)
5. EXIT SIGNS SHALL BE CONNECTED TO AN EMERGENCY POWER SYSTEM THAT WILL PROVIDE AN ILLUMINATION OF NOT LESS THAN 90 MIN. IN CASE OF PRIMARY POWER LOSS (1013.6.3)
6. EGRESS DOORS SHALL BE READILY OPENABLE FROM THE EGRESS SIDE WITHOUT THE USE OF A KEY OR SPECIAL KNOWLEDGE OR EFFORT. SEE 1010.1.9.3 FOR EXCEPTIONS.
7. DOOR HANDLES, LOCK AND OTHER OPERATING DEVICES SHALL BE INSTALLED AT A MIN. 34" AND A MAX. 48" ABOVE THE FINISHED FLOOR.
8. THIS DOOR TO REMAIN UNLOCKED WHEN BUILDING IS OCCUPIED.
9. ALL EGRESS DOOR OPERATIONS SHALL ALSO COMPLY WITH SECTION 1010.1.9.9- 1010.1.9.12.
10. THE MEANS OF EGRESS, INCLUDING THE EXIT DISCHARGE, SHALL BE ILLUMINATED AT ALL TIMES THE BUILDING SPACE SERVED BY THE MEANS OF EGRESS IS OCCUPIED.
11. THE MEANS OF EGRESS ILLUMINATION LEVEL SHALL NOT BE LESS THAN 1 FOOT-CANDLE AT THE WALKING SURFACE.
12. THE POWER SUPPLY FOR MEANS OF EGRESS ILLUMINATION SHALL NORMALLY BE PROVIDED BY THE PREMISES' ELECTRICAL SUPPLY. IN THE EVENT OF POWER SUPPLY FAILURE, AN EMERGENCY ELECTRICAL SYSTEM SHALL AUTOMATICALLY ILLUMINATE THE FOLLOWING AREAS:
    A. ISLES AND UNENCLOSED EGRESS STAIRWAYS IN ROOMS AND SPACES THAT REQUIRE TWO OR MORE MEANS OF EGRESS AND SPACES THAT REQUIRE TWO OR MORE MEANS OF EGRESS. B. CORRIDORS, EXIT ENCLOSURES AND EXIT PASSAGEWAYS IN BUILDING REQUIRED TO HAVE TWO OR MORE EXITS; C. EXTERIOR EGRESS COMPONENTS AT OTHER THAN THE LEVEL OF EXIT DISCHARGE UNTIL EXIT DISCHARGE IS ACCOMPLISHED FOR BUILDINGS REQUIRED TO HAVE TWO OR MORE EXITS. D. INTERIOR EXIT DISCHARGE ELEMENTS, AS PERMITTED IN SECTION 1028.1. IN BUILDINGS REQUIRED TO HAVE TWO OR MORE EXITS. E. EXTERIOR LANDINGS, AS REQUIRED BY SECTION 1010.1.6, FOR EXIT DISCHARGE DOORWAYS IN BUILDINGS REQUIRED TO HAVE TWO OR MORE EXITS.
13. THE EMERGENCY POWER SYSTEM SHALL PROVIDE POWER FOR A DURATION OF NOT LESS THAN 90 MINUTES AND SHALL CONSIST OF STORAGE BATTERIES, UNIT EQUIPMENT OR AN ON-SITE GENERATOR. THE INSTALLATION OF THE EMERGENCY POWER SYSTEM SHALL BE IN ACCORDANCE WITH SECTION 2702.
14. EMERGENCY LIGHTING FACILITIES SHALL BE ARRANGED TO PROVIDE INITIAL ILLUMINATION THAT IS AT LEAST AN AVERAGE OF 1 FOOT-CANDLE (11 lux) AND A MINIMUM AT ANY POINT OF 0.1 FOOT CANDLE (1 lux) MEASURED ALONG THE PATH OF EGRESS AT FLOOR LEVEL. ILLUMINATION LEVELS SHALL BE PERMITTED TO DECLINE TO 0.6 FOOT-CANDLE (6 lux) AVERAGE AND A .IMI,U, AT ANY POINT OF 0.6 FOOT-CANDLE (0.6 lux) AT THE END OF THE EMERGENCY LIGHTING TIME DURATION. a MAXIMUM-TO-MINIMUM ILLUMINATION UNIFORMITY RATIO OF 40 TO 1 SHALL NOT BE EXCEEDED.

BUREAU OF ENGINEERING
OFFICIAL RECORD

ENGINEERING
CITY OF LOS ANGELES

BUREAU OF ENGINEERING
DEPARTMENT OF PUBLIC WORKS
CITY OF LOS ANGELES

NO.	REVISION DESCRIPTION	DATE	BY

BUILDING NO. -
INDEX NO. RP-300118

LICENSED ARCHITECT
JOHN P. SPARANO
No. C-26244
EXP. 1-30-21
STATE OF CALIFORNIA

GARY LEE MOORE, PE, ENV SP
CITY ENGINEER
DATE:

ARCHITECTURAL DIVISION	LIC. NO.: C-26244	03/03/20
ARCHITECT/ENGINEER: JOHN SPARANO		03/03/20
DESIGNED BY: SPARANO + MOONEY ARCHITECTURE		03/03/20
DRAWN BY: JORGE BELTRAN		03/03/20
CHECKED BY: LUDWING JUAREZ		03/03/20
APPROVED BY:		

BID SET
PROJECT ISSUE DATE: 06/22/21

VERTICAL CONTROL:
HORIZONTAL CONTROL:

SHEET TITLE: CODE ANALYSIS AND EGRESS PLAN

PROJECT: GRANADA HILLS POOL AND BATHHOUSE REPLACEMENT PROJECT

ADDRESS: 16730 CHATSWORTH STREET GRANADA HILLS, CA 91344

WORK ORDER NO. #E170517
PLAN FILE NO. #308
DRAWING NO. G0.21
SHEET OF SHEETS

PLOTTED:8/18/2020 1:25:46 PM

THE CITY OF LOS ANGELES OR ITS OFFICERS OR AGENTS SHALL NOT BE RESPONSIBLE FOR THE ACCURACY OR COMPLETENESS OF ELECTRONIC COPIES OF THIS PLAN SHEET.

REVISION DATES: (DESIGN STAGE ONLY)

TTLB TEMPLATE REVISION DATE: 02/2013
SHEET ISSUE DATE:11/07/18
FILE PATH: BIM 360://Granada Hills Pool Renovation/A_Granada-Hills_2017.rvt

CITY OF LOS ANGELES
CALIFORNIA

BOARD OF BUILDING AND SAFETY COMMISSIONERS
VAN AMBATIELOS, PRESIDENT
E. FELICIA BRANNON, VICE PRESIDENT
JOSELYN GEAGA-ROSENTHAL
GEORGE HOVAGUIMIAN
JAVIER NUNEZ

ERIC GARCETTI, MAYOR

DEPARTMENT OF BUILDING AND SAFETY
201 NORTH FIGUEROA STREET
LOS ANGELES, CA 90012
FRANK M. BUSH, GENERAL MANAGER, SUPERINTENDENT OF BUILDING
OSAMA YOUNAN, P.E., EXECUTIVE OFFICER

SOILS REPORT APPROVAL LETTER

November 9, 2017

LOG # 100428
SOILS/GEOLOGY FILE - 2

Department of Recreation and Parks
1149 S. Broadway, 8th floor
Los Angeles, Ca 90015

TRACT: SUBDIVISION NO. 1 OF THE PROPERTY OF THE PORTER LAND AND WATER COMPANY (M R 31-3/6)
LOT(S): 2 SEC 18 T2N R15W
LOCATION: 16730 W CHATSWORTH ST

CURRENT REFERENCE REPORT/LETTER(S)	REPORT No.	DATE(S) OF DOCUMENT	PREPARED BY
Soils Report	17-074	08/22/2017	City of LA-GEO
Laboratory Test Report	A8950-06-12	07/31/2017	Geocon West, Inc.

The Grading Division of the Department of Building and Safety has reviewed the referenced report that provide) recommendations for the proposed swimming pool and shade structure. The proposed swimming pool is to replace an existing pool.The earth materials at the subsurface exploration locations consist of up to 6 feet of uncertified fill underlain by clay, sandy silt, and silt.

The consultants recommend to support the proposed structure(s) on conventional foundation bearing on a blanket of compacted fill. The shade structure may be supported on conventional foundation and/or drilled-pile foundations bearing on native undisturbed.

Engineering analyses provided by City of LA-GEO is based on field and laboratory testing performed by Geocon West, Inc. City of LA-GEO is accepting responsibility for use of the data in accordance to Code section 91.7008.5 of LABC.

The referenced reports are acceptable, provided the following conditions are complied with during site development:

(Note: Numbers in parenthesis ( ) refer to applicable sections of the 2017 City of LA Building Code. P/BC numbers refer the applicable Information Bulletin. Information Bulletins can be accessed on the internet at LADBS.ORG.)

1. The soils engineer shall review and approve the detailed plans prior to issuance of any permit. This approval shall be by signature on the plans that clearly indicates the soils engineer has reviewed the plans prepared by the design engineer and that the plans included the recommendations contained in his report. (7006.1)

2. All recommendations of the report(s) that are in addition to or more restrictive than the conditions contained herein shall be incorporated into the plans.

3. An on-site storm water infiltration system at the subject site shall not be implemented, as recommended.

4. A copy of the subject and appropriate referenced reports and this approval letter shall be attached to the District Office and field set of plans. Submit one copy of the above reports to the Building Department Plan Checker prior to issuance of the permit. (7006.1)

5. A grading permit shall be obtained for all structural fill and retaining wall backfill. (106.1.2)

6. All man-made fill shall be compacted to a minimum 90 percent of the maximum dry density of the fill material per the latest version of ASTM D 1557. Where cohesionless soil having less than 15 percent finer than 0.005 millimeters is used for fill, it shall be compacted to a minimum of 95 percent relative compaction based on maximum dry density (D1556). Placement of gravel in lieu of compacted fill is allowed only if complying with Section 91.7011.3 of the Code. (7011.3)

7. If import soils are used, no footings shall be poured until the soils engineer has submitted a compaction report containing in-place shear test data and settlement data to the Grading Division of the Department, and obtained approval. (7008.2)

8. Compacted fill shall extend beyond the footings a minimum distance equal to the depth of the fill below the bottom of footings or a minimum of two feet whichever is greater, except at locations where lateral over excavation is not possible (i.e., foundations adjacent to property lines or structures), in which case the foundations may be deepened to bear in native soils, as recommended (7011.3).

9. Existing uncertified fill shall not be used for support of footings, concrete slabs or new fill. (1809.2, 7011.3)

10. Drainage in conformance with the provisions of the Code shall be maintained during and subsequent to construction. (7013.12)

11. All loose foundation excavation material shall be removed prior to commencement of framing. Slopes disturbed by construction activities shall be restored. (7005.3)

12. The applicant is advised that the approval of this report does not waive the requirements for excavations contained in the State Construction Safety Orders enforced by the State Division of Industrial Safety. (3301.1)

13. Prior to the issuance of the permits, the soils engineer and/or the structural designer shall evaluate the surcharge loads used in the report calculations for the design of the retaining walls and shoring. If the surcharge loads used in the calculations do not conform to the actual surcharge loads, the soil engineer shall submit a supplementary report with revised recommendations to the Department for approval.

14. Unsurcharged temporary excavation may be cut vertical up to 5 feet. Excavations over 5 up to 10 feet shall be trimmed back at a uniform gradient not exceeding 1:1 (horizontal to vertical), from top to bottom of excavation, and excavations greater than 10 feet shall be trimmed back at a uniform gradient of 1.5:1, as recommended.

15. Footings supported on approved compacted fill or expansive soil shall be reinforced with a minimum of four (4) ½-inch diameter (#4) deformed reinforcing bars. Two (2) bars shall be placed near the bottom and two (2) bars placed near the top.

16. The foundation/slab design shall satisfy all requirements of the Information Bulletin P/BC 2014-116 "Foundation Design for Expansive Soils" (1803.5.3).

17. Pile caisson and/or isolated foundation ties are required by Code Sections 1809.13 and/or 1810.3.13. Exceptions and modification to this requirement are provided in Information Bulletin P/BC 2014-030.

18. When water is present in drilled pile holes, concrete shall be tremied from the bottom up to ensure minimum segregation of the mix and negligible turbulence of the water (1808.8.3)

19. Existing uncertified fill shall not be used for lateral support of deep foundation. (1810.2.1)

20. Slabs placed on approved compacted fill shall be at least 3½ inches thick and shall be reinforced with ½-inch diameter (#4) reinforcing bars spaced maximum of 16 inches on center each way.

21. Concrete floor slabs placed on expansive soil shall be placed on a 4-inch fill of coarse aggregate or on a moisture barrier membrane. The slabs shall be at least 3½ inches thick and shall be reinforced with ½-inch diameter (#4) reinforcing bars spaced maximum of 16 inches on center each way.

22. The seismic design shall be based on a Site Class D as recommended. All other seismic design parameters shall be reviewed by LADBS building plan check.

23. All retaining walls shall be provided with a standard surface backdrain system and all drainage shall be conducted to the street in an acceptable manner and in a non-erosive device. (7013.11)

24. With the exception of retaining walls designed for hydrostatic pressure, all retaining walls shall be provided with a subdrain system to prevent possible hydrostatic pressure behind the wall. Prior to issuance of any permit, the retaining wall subdrain system recommended in the soil report shall be incorporated into the foundation plan which shall be reviewed and approved by the soils engineer of record. (1805.4)

25. Installation of the subdrain system shall be inspected and approved by the soils engineer of record and the City grading/building inspector. (108.9)

26. Basement walls and floors shall be waterproofed/damp-proofed with an L.A. City approved "Below-grade" waterproofing/damp-proofing material with a research report number. (104.2.6)

27. Prefabricated drainage composites (Miradrain) (Geotextiles) may be only used in addition to traditionally accepted methods of draining retained earth.

28. The pool shall be designed for expansive soil conditions in accordance with Information Bulletin P/BC 2014-014.

29. The proposed swimming pool shall be designed for a freestanding condition. (1808.7.3)

30. Pool deck drainage shall be collected and conducted to an approved location via a non-erosive device. (7013.10)

31. All deck drainage shall be collected and conducted to an approved location in a non-erosive device. (7013.10)

32. All roof and pad drainage shall be conducted to the street in an acceptable manner. (7013.10)

33. All concentrated drainage shall be conducted in an approved device and disposed of in a manner approved by the LADBS. (7013.10)

34. The soils engineer shall inspect all excavations to determine that conditions anticipated in the report have been encountered and to provide recommendations for the correction of hazards found during grading. (7008 & 1705.6)

35. All friction pile or caisson drilling and installation shall be performed under the inspection and approval of the geologist and soils engineer. The geologist shall indicate the distance that friction piles or caissons penetrate into competent material in a written field memorandum. (1803.5.5, 1704.9)

36. Prior to the pouring of concrete, a representative of the consulting soils engineer shall inspect and approve the footing excavations. He/She shall post a notice on the job site for the LADBS Building Inspector and the Contractor stating that the work so inspected meets the conditions of the report, but that no concrete shall be poured until the City Building Inspector has also inspected and approved the footing excavations. A written certification to this effect shall be filed with the Grading Division of the Department upon completion of the work. (108.9 & 7008.2)

37. Prior to excavation, an initial inspection shall be called with LADBS Inspector at which time sequence of construction, pile installation, protection fences and dust and traffic control will be scheduled. (108.9.1)

38. Installation of shoring, underpinning, slot cutting excavations and/or pile installation shall be performed under the inspection and approval of the soils engineer and deputy grading inspector. (1705.6)

39. Prior to the placing of compacted fill, a representative of the soils engineer shall inspect and approve the bottom excavations. He/She shall post a notice on the job site for the City Grading Inspector and the Contractor stating that the soil inspected meets the conditions of the report, but that no fill shall be placed until the LADBS Grading Inspector has also inspected and approved the bottom excavations. A written certification to this effect shall be included in the final compaction report filed with the Grading Division of the Department. All fill shall be placed under the inspection and approval of the soils engineer. A compaction report together with the approved soil report and Department approval letter shall be submitted to the Grading Division of the Department upon completion of the compaction. In addition, an Engineer's Certificate of Compliance with the legal description as indicated in the grading permit and the permit number shall be included. (7011.3)

40. No footing/slab shall be poured until the compaction report is submitted and approved by the Grading Division of the Department.

DAN RYAN EVANGELISTA
Structural Engineering Associate I

DRE/dre
Log No. 100428
213-482-0480

cc: City of LA-GEO, Project Consultant
Geocon West, Inc., Project Consultant
VN District Office

CITY OF LOS ANGELES
CALIFORNIA

BOARD OF BUILDING AND SAFETY COMMISSIONERS
VAN AMBATIELOS, PRESIDENT
E. FELICIA BRANNON, VICE PRESIDENT
JOSELYN GEAGA-ROSENTHAL
GEORGE HOVAGUIMIAN
JAVIER NUNEZ

ERIC GARCETTI, MAYOR

DEPARTMENT OF BUILDING AND SAFETY
201 NORTH FIGUEROA STREET
LOS ANGELES, CA 90012
FRANK M. BUSH, GENERAL MANAGER, SUPERINTENDENT OF BUILDING
OSAMA YOUNAN, P.E., EXECUTIVE OFFICER

SOILS REPORT APPROVAL LETTER

November 14, 2018

LOG # 105775
SOILS/GEOLOGY FILE - 2

Department of Recreation and Parks
1149 S. Broadway, 8th floor
Los Angeles, Ca 90015

TRACT: SUBDIVISION NO. 1 OF THE PROPERTY OF THE PORTER LAND AND WATER COMPANY (M R 31-3/6)
LOT(S): 2 SEC 18 T2N R15W
LOCATION: 16730 W CHATSWORTH ST

CURRENT REFERENCE REPORT/LETTER(S)	REPORT No.	DATE OF DOCUMENT	PREPARED BY
Addendum Report	17-074	10/25/2018	City of LA-GEO

PREVIOUS REFERENCE REPORT/LETTER(S)	REPORT No.	DATE OF DOCUMENT	PREPARED BY
Dept. Approval Letter	100428	11/09/2017	LADBS
Soils Report	17-074	08/22/2017	City of LA-GEO
Laboratory Test Report	A8950-06-12	07/31/2017	Geocon West, Inc.

The Grading Division of the Department of Building and Safety has reviewed the referenced report that provide recommendations for the proposed pool equipment building, concrete ramp, a lifeguard room addition, PV panels and security light poles. The Department previously conditionally approved the above referenced reports dated 07/31/2017 and 08/22/2017 for the proposed swimming pool and shade structure in a letter dated 11/09/2017, Log #100428. Foundation recommendations are provided on page 2 of the 10/25/2018 report.

The referenced reports are acceptable, provided the following conditions are complied with during site development:

(Note: Numbers in parenthesis ( ) refer to applicable sections of the 2017 City of LA Building Code. P/BC numbers refer the applicable Information Bulletin. Information Bulletins can be accessed on the internet at LADBS.ORG.)

1. All conditions of the above referenced Department approval letter(s) shall apply except as specifically modified herein.

2. Controlled Low Strength Material, CLSM (slurry) proposed to be used for backfill shall satisfy the requirements specified in P/BC 2014-121.

3. Prior to the issuance of the permits, the soils engineer and/or the structural designer shall evaluate the surcharge loads used in the report calculations for the design of the retaining walls and shoring. If the surcharge loads used in the calculations do not conform to the actual surcharge loads, the soil engineer shall submit a supplementary report with revised recommendations to the Department for approval.

4. Temporary excavations that remove lateral support to the public way, adjacent property, or adjacent structures shall be supported by shoring or constructed using ABC slot cuts. Note: Lateral support shall be considered to be removed when the excavation extends below a plane projected downward at an angle of 45 degrees from the bottom of a footing of an existing structure, from the edge of the public way or an adjacent property. (3307.3.1)

5. Prior to the issuance of any permit that authorizes an excavation where the excavation is to be of a greater depth than are the walls or foundation of any adjoining building or structure and located closer to the property line than the depth of the excavation, the owner of the subject site shall provide the Department with evidence that the adjacent property owner has been given a 30-day written notice of such intent to make an excavation (3307.1).

6. The soils engineer shall review and approve the shoring plans prior to issuance of the permit (3307.3.2).

7. Shoring shall be designed for the lateral earth pressures specified in the section titled "Temporary Shoring" starting on page 2 of the 10/25/2018 report; all surcharge loads shall be included into the design.

8. Shoring shall be designed for a maximum lateral deflection of ½ inches, as recommended.

9. A shoring monitoring program shall be implemented to the satisfaction of the soils engineer.

10. Installation of shoring, slot cutting and/or pile excavations shall be performed under the inspection and approval of the soils engineer and deputy grading inspector (1705.6, 1705.8).

11. Retaining walls shall be designed for the lateral earth pressures specified in the section titled "Retaining Walls" starting on page 4 of the 10/25/2018 report. Note: All surcharge loads shall be included into the design.

12. Retaining walls higher than 6 feet shall be designed for lateral earth pressure due to earthquake motions as specified on page 10 of the 08/22/2017 report (1803.5.12).

DAN RYAN EVANGELISTA
Structural Engineering Associate II

DRE/dre
Log No. 105775
213-482-0480

cc: City of LA-GEO, Project Consultant
VN District Office

BUREAU OF ENGINEERING
OFFICIAL RECORD

BUREAU OF ENGINEERING
ENGINEERING
CITY OF LOS ANGELES

NO.	REVISION DESCRIPTION	DATE	BY

BUILDING NO. -
INDEX NO. RP-300118

LICENSED ARCHITECT
JOHN P. SPARANO
No. C-26244
EXP. 1-30-21
STATE OF CALIFORNIA

DEPARTMENT OF PUBLIC WORKS
CITY OF LOS ANGELES

GARY LEE MOORE, PE, ENV SP	CITY ENGINEER	DATE:
	ARCHITECTURAL DIVISION	03/03/20
ARCHITECT/ENGINEER: JOHN SPARANO	LIC. NO.: C-26244	03/03/20
DESIGNED BY: SPARANO + MOONEY ARCHITECTURE		03/03/20
DRAWN BY: JORGE BELTRAN		03/03/20
CHECKED BY: LUDWING JUAREZ		03/03/20
APPROVED BY:		03/03/20

VERTICAL CONTROL:
HORIZONTAL CONTROL:

SHEET TITLE: SOILS REPORT APPROVAL LETTERS

PROJECT: GRANADA HILLS POOL AND BATHHOUSE REPLACEMENT PROJECT
ADDRESS: 16730 CHATSWORTH STREET GRANADA HILLS, CA 91344

BID SET
PROJECT ISSUE DATE: 06/22/21

WORK ORDER NO. #E170517
PLAN FILE NO.
DRAWING NO. G0.22
SHEET 0 OF SHEETS

PLOTTED:8/18/2020 1:25:49 PM

THE CITY OF LOS ANGELES OR ITS OFFICERS OR AGENTS SHALL NOT BE RESPONSIBLE FOR THE ACCURACY OR COMPLETENESS OF ELECTRONIC COPIES OF THIS PLAN SHEET.

TTLB TEMPLATE REVISION DATE: 02/2013
SHEET ISSUE DATE: 11/20/18
FILE PATH: BIM 360://Granada Hills Pool Renovation/A_Granada-Hills_2017.rvt

REVISION DATES (DESIGN STAGE ONLY)

THE CITY OF LOS ANGELES OR ITS OFFICERS OR AGENTS SHALL NOT BE RESPONSIBLE FOR THE ACCURACY OR COMPLETENESS OF ELECTRONIC COPIES OF THIS PLAN SHEET.

TTLB TEMPLATE REVISION DATE: 02/2013
SHEET ISSUE DATE: 03/25/20
FILE PATH: BIM 360://Granada Hills Pool Renovation/A_Granada-Hills_2017.rvt

BOARD OF BUILDING AND SAFETY COMMISSIONERS
VAN AMBATIELOS PRESIDENT
JAVIER NUNEZ VICE PRESIDENT
JOSELYN GEAGA-ROSENTHAL
GEORGE HOVAGUIMIAN
ELVIN W. MOON

CITY OF LOS ANGELES
CALIFORNIA

ERIC GARCETTI
MAYOR

DEPARTMENT OF BUILDING AND SAFETY
201 NORTH FIGUEROA STREET
LOS ANGELES, CA 90012
FRANK M. BUSH
GENERAL MANAGER
SUPERINTENDENT OF BUILDING
OSAMA YOUNAN, P.E.
EXECUTIVE OFFICER

SOILS REPORT APPROVAL LETTER

March 23, 2020

LOG # 112389
SOILS/GEOLOGY FILE - 2

Department of Recreation and Parks
1149 S. Broadway, 8th floor
Los Angeles, Ca 90015

TRACT: SUBDIVISION NO. 1 OF THE PROPERTY OF THE PORTER LAND AND WATER COMPANY (M R 31-3/6)
LOT(S): 2 SEC 18 T2N R15W
LOCATION: 16730 W CHATSWORTH ST

CURRENT REFERENCE REPORT/LETTER(S)	REPORT No.	DATE OF DOCUMENT	PREPARED BY
Addendum Report	17-074	02/18/2020	City of LA-GEO

PREVIOUS REFERENCE REPORT/LETTER(S)	REPORT No.	DATE OF DOCUMENT	PREPARED BY
Dept. Approval Letter	105775	11/14/2018	LADBS
Addendum Report	17-074	10/25/2018	City of LA-GEO
Dept. Approval Letter	100428	11/09/2017	LADBS
Soils Report	17-074	08/22/2017	City of LA-GEO
Laboratory Test Report	A8950-06-12	07/31/2017	Geocon West, Inc.

The Grading Division of the Department of Building and Safety has reviewed the referenced report that provide recommendations for the proposed infiltration system and exterior slab. The Department previously conditionally approved the above referenced reports dated 08/22/2017 and 10/25/2018 for the proposed swimming pool, shade structure, pool equipment building, concrete ramp, a lifeguard room addition, PV panels and security light poles in a letter dated 11/14/2018, Log #105775. Foundation recommendations are provided on page 2 of the 10/25/2018 report.

The referenced reports are acceptable, provided the following conditions are complied with during site development:

(Note: Numbers in parenthesis ( ) refer to applicable sections of the 2020 City of LA Building Code. P/BC numbers refer the applicable Information Bulletin. Information Bulletins can be accessed on the internet at LADBS.ORG.)

1. All conditions of the above referenced Department approval letter(s) shall apply except as specifically modified herein.

2. Slabs placed on approved compacted fill shall be at least 3½ inches thick and shall be reinforced with ½-inch diameter (#4) reinforcing bars spaced a maximum of 16 inches on center each way.

3. Concrete floor slabs placed on expansive soil shall be placed on a 4-inch fill of coarse aggregate or on a moisture barrier membrane. The slabs shall be at least 3½ inches thick and shall be reinforced with ½-inch diameter (#4) reinforcing bars spaced a maximum of 16 inches on center each way.

4. The infiltration facility design and construction shall comply with the minimum requirements specified in the Information Bulletin P/BC 2014-118.

5. The infiltration system shall be constructed at the location shown on the drawing attached to the current report.

6. The construction of the infiltration system shall be provided under the inspection and approval of the soils engineer.

7. An overflow outlet shall be provided to conduct water to the street in the event that the infiltration system capacity is exceeded. (P/BC 2014-118)

8. Approval for the proposed infiltration system from the Bureau of Sanitation, Department of Public Works shall be secured.

9. A minimum distance of 10 feet (in any direction) shall be provided from adjacent proposed/existing footings to the discharge of the proposed infiltration system. A minimum distance of 10 feet horizontally shall be provided from private property lines to the proposed infiltration system.

DAN RYAN EVANGELISTA
Structural Engineering Associate III

Log No. 112389
213-482-0480

cc: City of LA-GEO, Project Consultant
VN District Office

BUREAU OF ENGINEERING
OFFICIAL RECORD

REVISION DATES (DESIGN STAGE ONLY)

BUREAU OF ENGINEERING
ENGINEERING
CITY OF LOS ANGELES

NO.	REVISION DESCRIPTION	DATE	BY

BUILDING NO. -
INDEX NO. RP-300118

LICENSED ARCHITECT GARY P. SPARANO No. C-26244 EXP. 1-30-21 STATE OF CALIFORNIA

DEPARTMENT OF PUBLIC WORKS
CITY OF LOS ANGELES

GARY LEE MOORE, PE, ENV SP
CITY ENGINEER

ARCHITECTURAL DIVISION
ARCHITECT/ENGINEER: JOHN SPARANO LIC. NO.: C-26244
DESIGNED BY: SPARANO + MOONEY ARCHITECTURE
DRAWN BY: JORGE BELTRAN
CHECKED BY: LUDWING JUAREZ
APPROVED BY:
DATE: 03/03/20 (x5)

VERTICAL CONTROL:
HORIZONTAL CONTROL:

SHEET TITLE: SOILS REPORT APPROVAL LETTERS

PROJECT: GRANADA HILLS POOL AND BATHHOUSE REPLACEMENT PROJECT
ADDRESS: 16730 CHATSWORTH STREET GRANADA HILLS, CA 91344

BID SET
PROJECT ISSUE DATE: 06/22/21

WORK ORDER NO. #E170517
PLAN FILE NO.
DRAWING NO. G0.23
SHEET 0 OF SHEETS

PLOTTED:8/18/2020 1:25:51 PM

ARCHITECTURAL ABBREVIATIONS

A.B.	ANCHOR BOLT
ABV	ABOVE
A.C.	ASPHALTIC CONCRETE
ACOUS	ACOUSTICAL
ACT	ACOUSTICAL CEILING TILE
ADJ	ADJUSTABLE, ADJACENT
A.F.	ACCESS FLOORING
AFF	ABOVE FINISH FLOOR
ALUM	ALUMINUM
ANOD	ANODIZED
A.P.	ACCESS PANEL
ARCH	ARCHITECTURAL
ASPH	ASPHALT
ASSOCD	ASSOCIATED
A.W.P.	ACOUSTICAL WALL PANEL
BD	BOARD
BLDG	BUILDING
BLK	BLOCK, BLOCKING
BM	BEAM
BRKT	BRACKET
B.U.R.	BUILT UP ROOF
BOT	BOTTOM
C	CARPET
CAB	CABINET
C.B.	CATCH BASIN
CBC	CALIFORNIA BUILDING CODE
CEM	CEMENT, CEMENTITIOUS
C.I.	CAST IRON
C.I.P.	CAST IN PLACE
CJ	CONTROL JOINT
C.L.	CHAIN LINK
CLG	CEILING
CLR	CLEAR
CLOS	CLOSET
CMU	CONCRETE MASONRY UNIT
COL	COLUMN
COMM	COMMUNICATION
COMPTR	COMPUTER
CONC	CONCRETE
CONT	CONTINUOUS, CONTROL
CORR	CORRIDOR
C.P.	CONTROL POINT
C.T.	CERAMIC TILE
C.T.B.	CERAMIC TILE BASE
DEPT	DEPARTMENT
DET	DETAIL
D.F.	DRINKING FOUNTAIN
DIA	DIAMETER
DIAG	DIAGONAL
DIM	DIMENSION
DIV	DIVISION(S)
DN	DOWN
DR	DOOR
DS	DOWNSPOUT
DWGS	DRAWINGS
EA	EACH
E.	EAST
(E)	EXISTING
EXIST	EXISTING
EXT'G	EXISTING
EJ	EXPANSION JOINT
EL	ELEVATION
ELEC	ELECTRICAL
ELEV	ELEVATION
E.O.C.	EMERGENCY OPERATIONS CENTER
EQ	EQUAL
EQUIP	EQUIPMENT
ETC	ET CETERA
E.W.C.	ELECTRIC WATER COOLER
EXH	EXHAUST
EXP'D	EXPOSED
EXT	EXTERIOR
FD	FLOOR DRAIN
F.E.	FIRE EXTINGUISHER
FEC	FIRE EXTINGUISHER CABINET
FF	FINISH FLOOR
F.G.	FINISH GRADE
F.H.C.	FIRE HOSE CABINET
FIN	FINISH
FIXT	FIXTURE
FL	FLOOR
FLG	FLOORING
F.O.	FACE OF
F.O.C.	FACE OF CONCRETE
F.O.S.	FACE OF STUD
FRAM'G	FRAMING
F.S.	FINISH SURFACE
FT	FOOT, FEET
FTG	FOOTING
FURR	FURRING
G.	GAS LINE
GA	GAUGE
GALV	GALVANIZED
GC	GENERAL CONTRACTOR
G.I.	GALVANIZED IRON
GL	GLASS
GLZ	GLAZING
GYP	GYPSUM WALLBOARD
GWB	GYPSUM WALLBOARD
H	HIGH
HC	HOLLOW CORE, HANDICAPPED
HD	SURFACE HARDENER
H.D.G.	HOT DIPPED GALVANIZED
HDR	HEADER
HDWD	HARDWOOD
HDWR	HARDWARE
HM	HOLLOW METAL
HORIZ	HORIZONTAL
H.P.	HIGH POINT
HR	HOUR
HT	HEIGHT
HTR	HEATER
HYDR	HYDRAULT
IBC	INTERNATIONAL BUILDING CODE
IN	INCH, INCHES
INSUL	INSULATION
INT	INTERIOR
INT'L	INTERNATIONAL
JAN	JANITOR
JST	JOINT
KITCH	KITCHEN
L.A.	LANDSCAPE AREA
LAM	LAMINATED
LAV	LAVATORY
LBS	POUNDS
LIB	LIBRARY
L.P.	LOW POINT
LTG	LIGHTING
M.B.	MACHINE BOLT
MAT'L	MATERIAL
MAX	MAXIMUM
MDL	MODEL
MECH	MECHANICAL
MED	MEDIUM
MFR	MANUFACTURER
MFRD	MANUFACTURED
MIN	MINIMUM
MOUNT	MOUNTED
M.R.G.B.	MOISTURE RESISTANT GYP BD
M.S.	MAGNETIC SWITCH
MTL	METAL
NEC.	NECESSARY
N.	NORTH
N/A	NOT APPLICABLE
N.I.C.	NOT IN CONTRACT
N-R	NON-RATED
O/	OVER
OC	ON CENTER
OCCUP	OCCUPANCY
O.D.	OUTSIDE DIAMETER
OPP	OPPOSITE
O.T.S.	OPEN TO STRUCTURE
PL	PLATE
PL CEM	PLASTER CEMENT
P LAM	PLASTIC LAMINATE
PLAS	PLASTIC
PLYWD.	PLYWOOD
P.P.	POWER POLE
PR	PAIR
PRE	FACTORY PREFINISHED
PROJ	PROJECTION
PT	PAINT
PTD	PAINTED
PVMT	PAVEMENT
R	RADIUS
R.A.	RETURN AIR
R.B.	RUBBER BASE
RCP	REFLECTED CEILING PLAN
RE:	REFER TO
REF	REFRIGERATOR
REING	REINFORCING
REQ'D	REQUIRED
REV	REVISION
RI	RISER
RM	ROOM
R.R.	RUBBER FLG W/ PROFILE RINGS
R.T.	RUBBER TREAD/RISER
S.	SOUTH
S.A.	SUPPLY AIR
S.AQ.D.	SEE AQUATIC DRAWINGS
S.C.	SOLID CORE
S.C.D.	SEE CIVIL DRAWINGS
SCHED	SCHEDULE
SEAL	SEALER (CONCRETE OR STONE)
SECT	SECTION
S.E.D.	SEE ELECTRICAL DRAWINGS
SERV	SERVER
SF	SQUARE FEET
SGL	SINGLE
SHTG.	SHEATHING
SHLV	SHELVING
SHT	SHEET
SIM	SIMILAR
SL	SLOPE
S.L.D.	SEE LANDSCAPE DRAWINGS
S.M.	SHEET METAL
S.M.D.	SEE MECHANICAL DRAWINGS
SPEC	SPECIFICATIONS
S.P.D.	SEE PLUMBING DRAWINGS
SQ	SQUARE
S.R.F.	SHEET RUBBER FLOORING
S.S.	STAINLESS STEEL
S.S.D.	SEE STRUCTURAL DRAWINGS
ST	STONE
STD	STANDARD
S.T.D.	SEE THEATRICAL DRAWINGS
STL	STEEL
STN	STAIN
STOR	STORAGE
STRUCT	STRUCTURAL
SUSP	SUSPENDED
SW	SWITCH
T	TREAD
T & B	TOP AND BOTTOM
T.C.	TOP OF CURB
TEL	TELEPHONE
TEMP	TEMPERED
T&G	TONGUE AND GROOVE
T.G.	TREE GRATE
THK	THICK
TJI	TRUSS JOIST
T.O.	TOP OF
TOC	TOP OF CONCRETE
T.O.P.	TOP OF PARAPET
T.O.PL.	TOP OF PLATE
T.P.	TOILET PARTITION
T.W.	TOP OF WALL
TYP	TYPICAL
TS	TUBE STEEL
UBC	UNIFORM BUILDING CODE
UNO	UNLESS NOTED OTHERWISE
UOC	UNLESS OTHERWISE CALLED
UON	UNLESS OTHERWISE NOTED
VCT	VINYL COMPOSITION TILE
VCP	VITRIFIED CLAY PIPE
VERT	VERTICAL
VEST	VESTIBULE
V.P.	VENEER PLASTIC
W.	WEST
WAINS	WAINSCOT
WC	WATER CLOSET
WD	WOOD
W/H	WATER HEATER
WDW	WINDOW
WM	WIRE MESH
WP	WEATHERPROOF
W/	WITH
WR	WATER RESISTANT
WRGB	WATER RESISTANT GYP BD
WWF	WELDED WIRE FABRIC
WWM	WELDED WIRE MESH
Ø	DIAMETER
#	POUND OR NUMBER
	CENTER LINE
&	AND
@	AT
°	DEGREES

DIMENSION GRAPHIC NOTES

DIMENSIONS:

NOTE: GENERAL CONTRACTOR RESPONSIBILITIES FOR DIMENSIONS PROVIDED WITHIN THESE DRAWINGS ARE OUTLINED BELOW:

1. THE CONTRACTOR SHALL BE RESPONSIBLE FOR COORDINATING ALL ARCHITECTURAL DIMENSIONS TO ASSURE PROPER PLACEMENT OF ALL PARTS AND MATERIALS IN CONJUNCTION WITH ALL OTHER DISCIPLINES REPRESENTED IN THESE DOCUMENTS, PRIOR TO COMMENCING WORK.
2. VERIFY ALL DIMENSIONS INCLUDING SITE CONDITIONS, BEFORE STARTING WORK.
3. WRITTEN DIMENSIONS SHALL TAKE PRECEDENCE OVER SCALE.

NOTE: UNLESS NOTED OTHERWISE, DIMENSIONS IN THESE DRAWINGS ARE GENERALLY PLACED AS INDICATED BELOW:

1. MASONRY: TO UNFINISHED FACE (NOTE @ SPLITE FACE CONDITION THESE DRAWINGS ASSUME STANDARD 8" OR 12" WIDE BLOCK)

2. CONCRETE: TO UNFINISHED FACE

3. STRUCTURAL: TO STEEL OR TUBING FACE, OR CENTER LINE

4. COLUMNS: CENTER LINE

5. NONBEARING PARTITIONS: TO FACE OF STUD. SEE NOTE 6 BELOW:

6. DIMENSION GRAPHICS

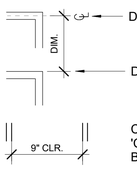

DIMENSION TO CENTER LINE

DIMENSION TO FACE OF STUD OR OTHER UNFINISHED SURFACE

CLEAR FINISH DIMENSIONS:
'CLR' MEANS THE DIMENSIONS REQUIRED AFTER ALL FINISHES HAVE BEEN APPLIED TO THE SUBJECT SURFACES

DRAWING SYMBOLS

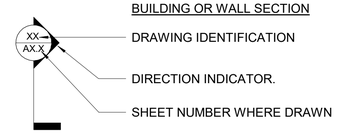

BUILDING OR WALL SECTION
DRAWING IDENTIFICATION
DIRECTION INDICATOR.
SHEET NUMBER WHERE DRAWN

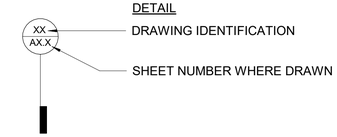

DETAIL
DRAWING IDENTIFICATION
SHEET NUMBER WHERE DRAWN



DRAWING TITLE
DRAWING NUMBER
DRAWING NAME
DRAWING SCALE

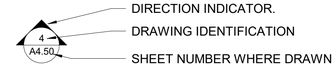

EXTERIOR ELEVATION
DIRECTION INDICATOR.
DRAWING IDENTIFICATION
SHEET NUMBER WHERE DRAWN

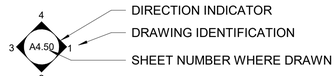

INTERIOR ELEVATION
DIRECTION INDICATOR
DRAWING IDENTIFICATION
SHEET NUMBER WHERE DRAWN

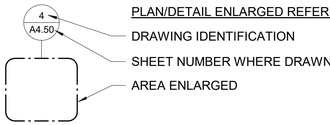

PLAN/DETAIL ENLARGED REFERENCE
DRAWING IDENTIFICATION
SHEET NUMBER WHERE DRAWN
AREA ENLARGED

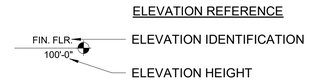

ELEVATION REFERENCE
ELEVATION IDENTIFICATION
ELEVATION HEIGHT

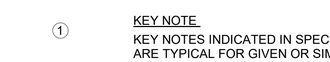

KEY NOTE
KEY NOTES INDICATED IN SPECIFIC DETAILS ARE TYPICAL FOR GIVEN OR SIMILAR CONDITIONS UNLESS NOTED OTHERWISE.

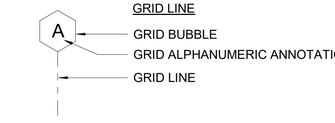

GRID LINE
GRID BUBBLE
GRID ALPHANUMERIC ANNOTATION
GRID LINE

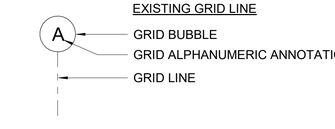

EXISTING GRID LINE
GRID BUBBLE
GRID ALPHANUMERIC ANNOTATION
GRID LINE

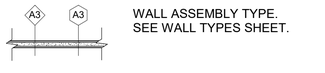

WALL ASSEMBLY TYPE.
SEE WALL TYPES SHEET.

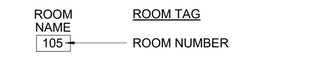

ROOM TAG
ROOM NUMBER
DOOR TAG
WINDOW TAG

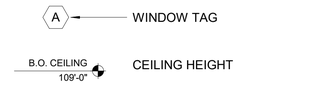

CEILING HEIGHT

GRAPHIC SYMBOLS | DESCRIPTION



CONCRETE OR OTHER CEMENTITIOUS MATERIAL



MASONRY:
(CMU, STONE, OR BRICK, AS INDICATED IN ASSEMBLY DETAILS)

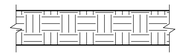

EARTH/SOIL

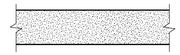

GRAVEL OR SAND



PLYWOOD



CEMENT PLASTER

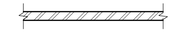

STEEL

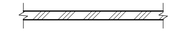

ALUMINUM

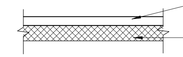

FIBER BOARD
RIGID INSULATION

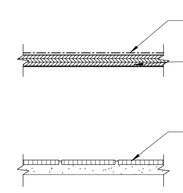

BITUMINOUS SHEATHING OR OTHER MEMBRANE
SUBSTRATE PER ASSEMBLY DETAIL



CERAMIC OR VCT TILE PER SCHEDULES

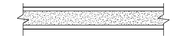

INSULATION: THERMAL OR SOUND AS REQUIRED BY ASSEMBLY DETAIL



GYPSUM WALLBOARD

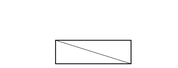

CONTINUOUS WOOD MEMBER

WOOD MEMBER INTERRUPTED AT SHORT INTERVALS OR BLOCKING

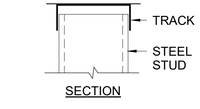

STEEL STUDS (DRAWINGS AT LARGER SCALES)

BUREAU OF ENGINEERING
OFFICIAL RECORD

THE CITY OF LOS ANGELES OR ITS OFFICERS OR AGENTS SHALL NOT BE RESPONSIBLE FOR THE ACCURACY OR COMPLETENESS OF ELECTRONIC COPIES OF THIS PLAN SHEET.

TTLB TEMPLATE REVISION DATE: 02/2013
SHEET ISSUE DATE: 01/04/18
FILE PATH: BIM 360://Granada Hills Pool Renovation/A_Granada-Hills_2017.rvt

REVISION DATES (DESIGN STAGE ONLY)

BUREAU OF ENGINEERING
CITY OF LOS ANGELES

BUREAU OF ENGINEERING
REVISION DESCRIPTION | DATE | BY
NO.

BUILDING NO. -
INDEX NO. RP-300118

LICENSED ARCHITECT
JOHN P. SPARANO
No. C-26244
EXP. 1-30-21
STATE OF CALIFORNIA

DEPARTMENT OF PUBLIC WORKS
CITY OF LOS ANGELES

GARY LEE MOORE, PE, ENV SP — CITY ENGINEER — DATE:
ARCHITECTURAL DIVISION
ARCHITECT/ENGINEER: JOHN SPARANO — LIC. NO.: C-26244 — 03/03/20
DESIGNED BY: SPARANO + MOONEY ARCHITECTURE — 03/03/20
DRAWN BY: JORGE BELTRAN — 03/03/20
CHECKED BY: LUDWING JUAREZ — 03/03/20
APPROVED BY: — 03/03/20

BID SET
PROJECT ISSUE DATE: 06/22/21
VERTICAL CONTROL:
HORIZONTAL CONTROL:

SHEET TITLE: SYMBOLS AND ABBREVIATIONS

PROJECT: GRANADA HILLS POOL AND BATHHOUSE REPLACEMENT PROJECT
ADDRESS: 16730 CHATSWORTH STREET GRANADA HILLS, CA 91344

WORK ORDER NO. #E170517
PLAN FILE NO. #308
DRAWING NO. G0.30
SHEET 0 OF SHEETS

PLOTTED:8/18/2020 1:25:55 PM

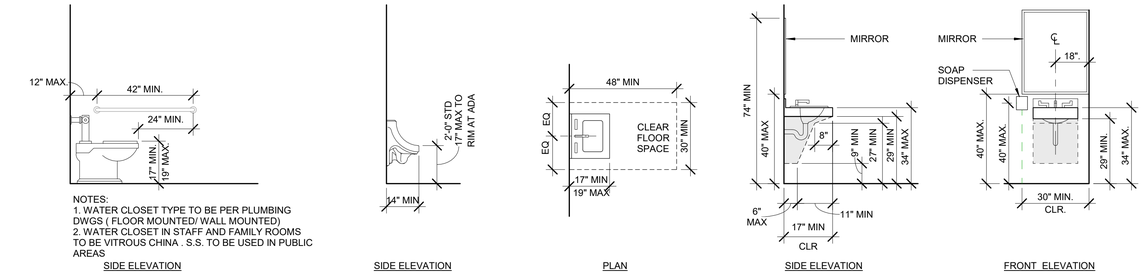

PLUMBING FIXTURE MOUNTING DIAGRAMS
1 3/8" = 1'-0"

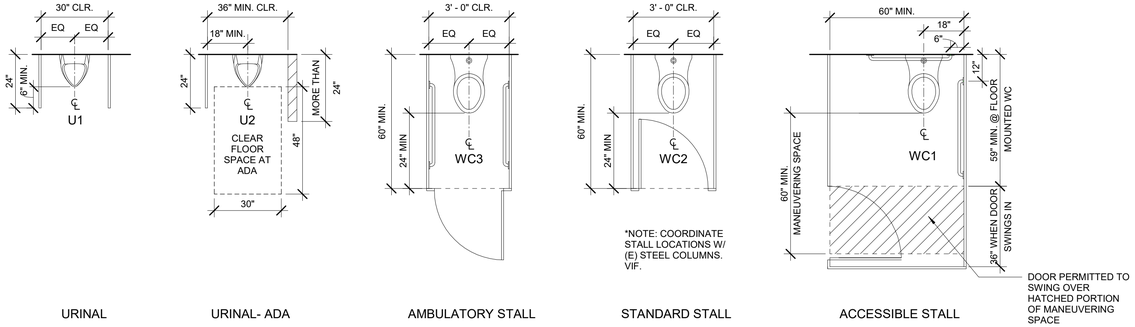

NOTES:

ACCESSIBLE STALL DOORS SHALL PROVIDE A CLEAR WIDTH OF 32 INCHES MIN. CLEAR OPENINGS OF DOORWAYS WITH SWINGING DOORS SHALL BE MEASURED BETWEEN THE FACE OF THE DOOR AND THE STOP, WITH THE DOOR OPEN 90 DEGREES. THERE SHALL BE NO PROJECTIONS INTO THE REQUIRED CLEAR OPENING WIDTH LOWER THAN 34 INCHES ABOVE THE WALKING SURFACE. PROJECTIONS INTO THE CLEAR OPENING WIDTH BETWEEN 34 INCHES AND 80 INCHES ABOVE THE WALKING SURFACE SHALL NOT EXCEED 4 INCHES.

SEE SHEET A3.12 FOR MORE INFO.

TYPICAL STALL LAYOUTS Copy 1
2 3/8" = 1'-0"

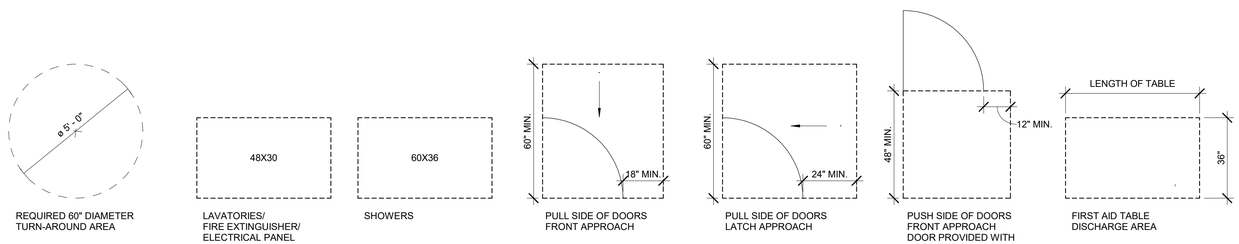

REQUIRED CLEAR FLOOR SPACE AREA DIAGRAMS

CLEAR FLOOR SPACE AREA DIAGRAMS
3 3/8" = 1'-0"

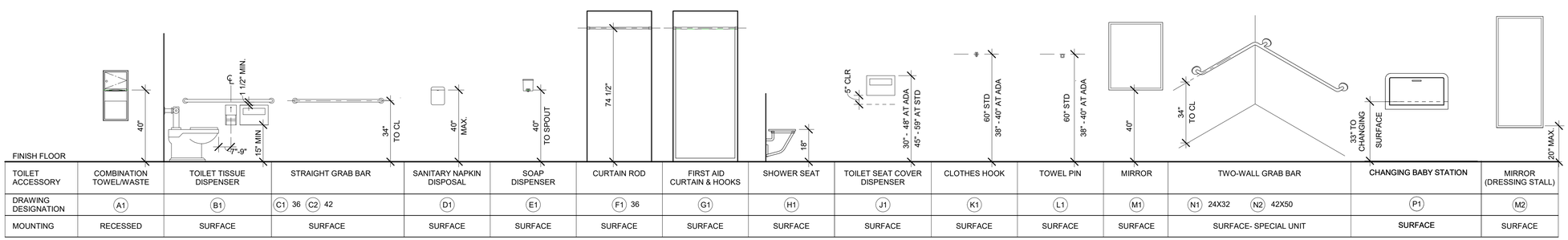

TOILET ACCESSORY	COMBINATION TOWEL/WASTE	TOILET TISSUE DISPENSER	STRAIGHT GRAB BAR	SANITARY NAPKIN DISPOSAL	SOAP DISPENSER	CURTAIN ROD	FIRST AID CURTAIN & HOOKS	SHOWER SEAT	TOILET SEAT COVER DISPENSER	CLOTHES HOOK	TOWEL PIN	MIRROR	TWO-WALL GRAB BAR	CHANGING BABY STATION	MIRROR (DRESSING STALL)
DRAWING DESIGNATION	A1	B1	C1 36 C2 42	D1	E1	F1 36	G1	H1	J1	K1	L1	M1	N1 24X32 N2 42X50	P1	M2
MOUNTING	RECESSED	SURFACE	SURFACE	SURFACE	SURFACE	SURFACE	SURFACE	SURFACE	SURFACE	SURFACE	SURFACE	SURFACE	SURFACE- SPECIAL UNIT	SURFACE	SURFACE
	BOBRICK: B-3699,3644,3944	BOBRICK: B-288	BOBRICK: B-6806	BOBRICK: B-270	BOBRICK: B-2111	BOBRICK: B-207	BOBRICK: B-204-2 BOBRICK: B-204-1	BOBRICK: B-5193	BOBRICK: B-4221	BOBRICK: B-2116	BOBRICK: B-677	BOBRICK: B-290 24X36	BOBRICK: B-6868 BOBRICK: 5897 CUSTOM SIZE	KOALA KARE: KB200 HORIZONTAL	CUSTOM TO MATCH BOBRICK: B-290 18"X54"

ACCESSORY SCHEDULE AND MOUNTING DIAGRAMS
4 3/8" = 1'-0"

ACCESSIBILITY NOTES

1. A MIN. 80" HEADROOM IS TO BE PROVIDED FROM ALL WALKWAY SURFACES TO ANY OBSTRUCTIONS.
2. THERE IS TO BE A LEVEL FLOOR OR LANDING AREA ON EACH SIDE OF ALL DOORS. THE FLOOR OR LANDING IS NOT TO BE LOWER THAN 1/2" BELOW DOORWAY THRESHOLD.
3. ALL HAND-ACTIVATED DOOR OPENING HARDWARE MEETS THE FOLLOWING REQUIREMENTS:
   A. IS TO BE CENTERED A MIN. 30" AND MAX. OF 44" A.F.F.
   B. LATCHING OR LOCKING DOORS IN A PATH OF TRAVEL ARE OPERATED W/ A SINGLE EFFORT BY LEVER-TYPE HARDWARE, PANIC NBARS, PUSH-PULL ACTIVATING BARS OR OTHER HARDWARE DESIGNED TO PROVIDE PASSAGE WITHOUT THE REQUIREMENT TO GRASP THE HARDWARE.
4. THE LOWER 10" OF ALL DOORS SHALL BE CONSTRUCTED AS FOLLOWS:
   A. TO BE SMOOTH AND UNINTERRUPTED, TO ALLOW THE DOOR TO BE OPENED BY A WHEELCHAIR FOOTREST WITHOUT CREATING A TRAP OR HAZARDOUS CONDITION.
   B. NARROW FRAME DOORS MAY USE A 10" H. SMOOTH PANEL ON THE PUSH SIDE OF THE DOOR.
5. STANDARD TOILET COMPARTMENT DOORS WILL BE PROVIDED AS FOLLOWS:
   A. MIN. 9" CLEARANCE FOR FOOT RESTS UNDERNEATH.
   B. A SELF-CLOSING DEVICE.
6. WHERE PERMANENT IDENTIFICATION IS PROVIDED FOR ROOMS AND SPACES, NON-GLARE RAISED LETTERS SHALL ALSO BE PROVIDED AND SHALL BE ACCOMPANIED BY BRAILLE.
7. ALL APPLICABLE ACCESSIBILITY REQUIREMENTS FOR SIGNAGE OF CBC SECTION 11B-703 SHALL BE SATISFIED.
8. ALL BUILDING ENTRANCES THAT ARE ACCESSIBLE TO AND USABLE BY PERSONS WITH DISABILITIES AND AT EVERY MAJOR JUNCTION ALONG OR LEADING TO AN ACCESSIBLE ROUTE OF TRAVEL SHALL BE IDENTIFIED WITH A SIGN DISPLAYING THE INTERNATIONAL SYMBOL OF ACCESSIBILITY AND WITH ADDITIONAL DIRECTIONAL SIGNS, AS REQUIRED, TO BE VISIBLE TO PERSONS ALONG APPROACHING PEDESTRIAN WAYS PER CBC SECTION 1117A.2
9. FACILITIES REQUIRED TO BE ACCESSIBLE SHALL COMPLY WITH CBC SECTION 1009.1

ENTRANCES AND EXITS

1. EXIT DOORS SHALLL BE CAPABLE OF OPENING WITHOUT THE USE OF A KEY OR ANY SPECIAL KNOWLEDGE OR EFFORT PER BUILDING CODE 1003.3.1.8.
2. WIDTH AND HEIGHT OF REQUIRED EXIT DOORWAYS TO COMPLY WITH TITLE 24, 1004.6
3. MAX. EFFORT TO OPERATE EXTERIOR AND INTERIOR DOORS SHALL NOT EXCEED 5 LBS. WITH SUCH PULL OR PUSH EFFORT BEING APPLIED AT RIGHT ANGLES TO HINGED DOORS AND AT THE CENTER PLANE OF SLIDING OR FOLDING DOORS PER CBC SECTION 11B-404.2.9

PROTRUDING OBJECTS

1. PROTRUDING OBJECTS SHALL COMPLY WITH CBC SECTION 11B-307
2. OBJECTS WITH LEADING EDGES MORE THAN 27" AND NOT MORE THAN 80" ABOVE FINISH FLOOR OR GROUND SHALL PROTRUDE 4" MAX. HORIZONTALLY INTO THE CIRCULATION PATH PER CBC SECTION 11B-307.2
3. VERTICAL CLEARANCE SHALL BE 80" HIGH MIN.
4. GUARDRAILS OR OTHER BARRIERS SHALL BE PROVIDED WHERE VERTICAL CLEARANCE IS LESS THAN 80" HIGH. THE LANDING EDGE OF SUCH GUARDRAIL OR BARRIER SHALL BE LOCATED 27" MAX. ABOVE THE FINISH FLOOR OR GROUND PER CBC SECTION 11B-307.4
   PROTRUDING OBJECTS SHALL NOT REDUCE THE CLEAR WIDTH REQUIRED FOR ACCESSIBLE ROUTES PER CBC SECTION 11B-307.5

ADA SHOWER STALL

1. 2 FIXED SHOWER HEADS PROVIDED IN EXEMPTION TO SECTION 11B-608J6 IN PUBLIC SHOWERS. EACH SHOWER HEAD SHALL BE INSTALLED SO IT CAN BE OPERATED INDEPENDENTLY OF THE OTHER AND SHALL HAVE SWIVE ANGLE ADJUSTMENTS, BOTH VERTICALLY AND HORIZONTALLY. ONE SHOWER HEAD SHALL BE LOCATED AT HEIGHT OF 48" MAX. ABOVE FINISH FLOOR.
2. WATER CONTROLS SHALL BE OF A SINGLE LEVER DESIGN, OPERABLE WITH ONE HAND, AND SHALL NOT REQUIRE TIGHT GRASPING, PINCHING, OR TWISTING OF THE WRIST. THE CENTERLINE OF THE CONTROLS SHALL BE LOCATED AT 39"-41" ABOVE THE SHOWER FLOOR. THE FORCE REQUIRED TO ACTIVATE CONTROLLS SHALL BE NO GREATER THAN 5 LBS. CONTROLS SHALL COMPLY WITH CBC SECTION 11B-309-A
3. SHOWER PUMBING FIXTURES
   A. SHOWER HEADS TYPE:
      a. FREE-FLOW SHOWER HEAD-SYMMONS MODEL # 4-282F @ 76" A.F.F. AND @ 48" A.F.F. RESPECTIVELY
   B. SHOWER CONTROLS
      a. CONCEALED VOLUME CONTROL VALVE-SYMMONS MODEL #022 @40" +- 1" A.F.F.
      b. LEVELTROL LEVER DIVERTER WITH VOLUME CONTROL-SYMMONS MODEL #4-458 @ 40" +- A.F.F.
4. STAFF SHOWERS TO RECEIVE FLEXIBLE SHOWER SPRAY HOSE- 60" LONG MIN.
5. GRAB BARS TO COMPLY WITH CBC SECTIONS 11B-608.2.3 AND 11B-610
6. SHOWER SEAT TO COMPLY WITH CBC SECTION 11B-610

CONTROLS & OPR. MECHANISMS

1. CONTROLS AND OPERATING MECHANISMS SHALL COMPLY WITH ACCESSIBILITY CODE.
2. THE HIGHEST OPERABLE PART OF ALL CONTROLS, DISPENSERS, RECEPTACLES, AND OTHER OPERABLE EQUIPMENT SHALL BE PLACED WITHIN 48" OF THE FLOOR BIT NOT LOWER THAN 15" IF FORWARD APPROACH AND WITHIN 54" BUT NOT LOWER THAN 9" IF SIDE APPROACHED.
3. CONTROLS AND OPERATING MECHANISMS SHALL BE OPERABLE WITH ONE HAND AND SHALL NOT REQUIRE TIGHT GRASPING, PINCHING, OR TWISTING OF THE WRIST. THE FORCE REQUIRED TO ACTIVATE CONTROLS SHALL BE NO GREATER THAN 5 POUNDS.

ACCESSIBLE ROUTE OF TRAVEL

1. GRADING SHALL BE COMPLETED TO PROVIDE HANDICAP ACCESS IN ACCORDANCE WITH THE 2017 LOS ANGELES CITY BUILDING CODE.
2. WALKS AND SIDEWALKS SHALL HAVE A CONTINUOUS COMMON SURFACE, NOT INTERRUPTED BY STEPS OR ABRUPT CHANGES IN LEVEL EXCEEDING 1/4".
3. WHEN ABRUPT CHANGES IN LEVEL NOT EXCEEDING 1/2" OCCUR, THEY SHALL BE BEVELED WITH A SLOPE NO GREATER THAN 1:2, EXCEPT THAT LEVEL CHANGES NOT ESCEEDING 1/4" MAY BE VERTICAL.
4. WALK AND SIDEWALK SURFACE SLOPES SHALL NOT EXCEED 2%.
5. WALKS SHALL BE PROVIDED WITH A LEVEL AREA NOT LESS THAN 60" BY 60" AT DOOR OR GATE THAT SWINGS TOWARD THE WALK, AND NOT LESS THAN 48" WIDE BY 44" DEEP AT DOOR OR GATE THAT SWINGS AWAY FROM THE WALK.
6. WALK AND SIDEWALK SURFACES SHALL BE SLIP-RESISTANT AS FOLLOWS:
   A. SURFACES WITH A SLOPE OF LESS THAN 6% GRADIENT SHALL BE AT LEAST AS SLIP-RESISTANT AS THAT DESCRIBED AS A MEDIUM FLOOR FINISH.
   B. SURFACES WITH SLOPE OF 6% GRADIENT SHALL BE SLIP-RESISTANT.
   C. (3) DIFFERENT 1'X4' MOCK UPS ITH (3) DIFFERENT CONCRETE FINISGHES WILL BE MADEAT THE BEGINNING OF THE PROJECT FOR CLIENT APPROVAL. MOCK UP TO REMAIN UNTIL COMPLETION OF CONCRETE WORK.
7. RAMPS ON ACCESSIBLE ROUTES SHALL COMPLY WITH CBC SECTION 11B-405.
8. RAMP RUNS SHALL HAVE A RUNNING SLOPE NOT STEEPER THAN 1:12 OR 8.33%
9. CROSS SLOPE OF RAMP RUNS SHALL NOT BE STEEPER THAN 1:48 OR 2%
10. FLOOR OR GROUND SURFACES OF RAMP RUNS SHALL COMPLY WITH CBC SECTION 11B-302. CHANGES IN LEVEL OTHER THAN THE RUNNING SLOPE AND CROSS SLOPE ARE NOT PERMITTED ON RAMP RUNS.
11. THE CLEAR WIDTH OF A RAMP RUN SHALL BE 48 INCHES MINIMUM.
12. THE RISE OF ANY RAMP SHALL BE 30 INCHES MAXIMUM.
13. RAMPS SHALL HAVE LANDINGS AT THE TOP AND BOTTOM OF EACH RAMP RUN. LANDINGS SHALL COMPLY WITH CBC SECTION 11-B-405.7.
14. (SLOPE) LANDINGS SHALL COMPLY WITH CBC SECTION 11B-302/
15. THE LANDING CLEAR WIDTH SHALL BE AT LEAST AS WIDE A STHE WIDEST RAMP RUN LEADING TO THE LANDING.
16. TOP LANDINGS SHALL BE 60" WIDE MIN. AND LANDING CLEAR LENGTH SHALL BE 60" LONG MIN. BOTTOM LANDING SHALL EXTEND 72" MIN. IN THE DIRECTION OF RAMP RUN.
17. RAMPS THAT CHANGE DIRECTION BETWEEN RUNS AT LANDINGS SHALL HAVE A CLEAR LANDING 60" MIN. BY 72" MIN. IN THE DIRECTION OF THE DOWNWARD TRAVEL FROM THE UPPER RAMP RUN.
18. WHERE DOORWAYS ARE LOCATED ADJACENT TO A RAMP LANDING , MANEUVERING CLEARANCES REQUIRED BY SECTIONS 11B-404.2.4 AND 11B-404.3.2 SHALL BE PERMITTED TO OVERLAP THE REQUIRED LANDING AREA.
19. RAMP RUNS SHALL HAVE HANDRAILS COMPLYING WITH SECTION 11B-505.
20. EDGE PROTECTION COMPLYING WITH SECTION 11B-405.9.2 SHALL BE PROVIDED ON EACH SIDE OF RAMP RUN AND AT EACH RAMP LANDINGS.
21. LANDINGS SUBJECT TO WET CONDITIONS SHALL BE DESIGNED TO PREVENT THE ACCUMULATION OF WATER.

ADA LAVATORY NOTES

1. ADA LAVATORIES SHALL COMPLY WITH CBC SECTION 11B-606.
2. A CLEAR FLOOR SPACE 30" WIDE X 48" LONG SHALL BE PROVIDED IN FRONT OF A LAVATORY TO ALLOW FORWARD APPROACH. SUCH CLEAR FLOOR SPACE SHALL ADJOIN OR OVERLAP AN ACCESSIBLE ROUTE AND SHALL EXTEND INTO KNEE AND TOE SPACE UNDERNEATH THE LAVATORY.
3. LAVATORIES SHALL BE MOUNTED WITH A CLEARANCE OF AT LEAST 29" FROM THE FLOOR TO THE BOTTOM OF THE APRON WITH KNEE CLEARANCE UNDER THE FRONT UP EXTENDING A MINIMUM OF 30" IN WIDTH WITH 8" MIN. DEPTH AT THE TOP. TOE CLEARANCE SHALL BE THE SAMEWIDTH AND SHALL BE A MIN. OF 9" HIGH FROM THE FLOOR AND A MIN. OF 17" DEEP FROM THE FRONT OF THE LAVATORY.
4. A PROJECTION OF A LAVATORY BOWL INTO THE 8" CLEAR SPACE, THEREBY REDUCING THE CLEAR HEIGHT BELOWTHE LAVATORY TO NO LESS THAN 27" AT 8" BACK FROM THE APRON, MEETS THE REQUIREMENT FOR PROVIDING KNEE CLEARANCE. A MAX. HEIGHT OF 34" TO THE TOP OF THE LAVATORY IS RECOMMENDED.
5. HOT WATER AND DRAIN PIPES UNDER THE LAVATORIES SHALL BE INSULATED OR OTHERWISE COVERED. THERE SHALL BE NO SHARP OR ABRASIVE SURFACES UNDER LAVATORIES.
   FAUCET CONTROLS AND OPERATING MECHANISMS SHALL BE OPERABLE WITH ONE HAND AND SHALL NOT REQUIRE TIGHT GRASPING, PINCHING, OR TWISTING OF THE WRIST. THE FORCE REQUIRED TO ACTIVATE CONTROLS SHALL BE NO GREATER THAN 5LBS. PER FT LEVER-OPERATED, PUSH-TYPE AND ELECTRONICALLY CONTROLLED MECHANISMS ARE EXAMPLES OF ACCEPTABLE DESIGNS. SELF-CLOSING VALVES ARE ALLOWED IF THE FAUCET REMAINS OPEN FOR AT LEAST 10 SECONDS.

ACCESSIBLE URINAL NOTES

1. ACCESSIBLE URINAL SHALL COMPLY WITH CBC SECTION 11B-605
2. WHERE URINALS ARE PROVIDED, AT LEAST ONE SHALL HAVE A CLEAR SPACE 30" WIDE X 48" LONG IN FRONT OF THE URINAL.
3. WHERE URINALS ARE PROVIDED, AT LEAST ONE WITH A RIM PROJECTING A MIN. OF 14" FROM THE WALL AND A MAX. OF 17" ABOVE THE FLOOR SHALL BE PROVIDED.
4. URINALS SHALL BE WALL HUNG TYPE WITH THE RIM 17"MAX. ABOVE FINISH FLOOR OR GROUND. URINALS SHALL BE 13 1/2" DEEP MIN. MEASURED FROM THE OUTER FACE OF THE URINAL RIM TO THE BACK OF THE FIXTURE PER CBC SECTION 11B-605.2.
   FLUSH CONTROLS SHALL BE OPERABLE WITH ONE HAND AND SHALL NOT REQUIRE TIGHT GRASPING, PINCHING OR TWISTING OF THE WRIST AND SHALL BE MOUNTED NO MORE THAN 44" ABOVE THE FLOOR. THE FORCE REQUIRED TO ACTIVATE CONTROLS SHALL BE NO GREATER THAN 5 LBS.

THE CITY OF LOS ANGELES OR ITS OFFICERS OR AGENTS SHALL NOT BE RESPONSIBLE FOR THE ACCURACY OR COMPLETENESS OF ELECTRONIC COPIES OF THIS PLAN SHEET.

TTLB TEMPLATE REVISION DATE: 02/2013
SHEET ISSUE DATE: 01/04/18
FILE PATH: BIM 360://Granada Hills Pool Renovation\A_Granada-Hills_2017.rvt

REVISION DATES (DESIGN STAGE ONLY)

BUREAU OF ENGINEERING
CITY OF LOS ANGELES
ENGINEERING

NO.	REVISION DESCRIPTION	DATE	BY

BUILDING NO. -
INDEX NO. RP-300118

DEPARTMENT OF PUBLIC WORKS
BUREAU OF ENGINEERING

GARY LEE MOORE, PE, ENV SP
CITY ENGINEER DATE: 03/03/20

ARCHITECTURAL DIVISION
ARCHITECT/ENGINEER: JOHN SPARANO LIC. NO.: C-26244 03/03/20
DESIGNED BY: SPARANO + MOONEY ARCHITECTURE 03/03/20
DRAWN BY: JORGE BELTRAN
CHECKED BY: LUDWING JUAREZ 03/03/20
APPROVED BY:

VERTICAL CONTROL:
HORIZONTAL CONTROL:

SHEET TITLE: ACCESSIBILITY NOTES

PROJECT: GRANADA HILLS POOL AND BATHHOUSE REPLACEMENT PROJECT
ADDRESS: 16730 CHATSWORTH STREET GRANADA HILLS, CA 91344

BID SET
PROJECT ISSUE DATE: 06/22/21

CITY OF LOS ANGELES

WORK ORDER NO. #E170517
PLAN FILE NO. #308
DRAWING NO. G0.40
SHEET O F SHEETS

BUREAU OF ENGINEERING OFFICIAL RECORD

PLOTTED:6/18/2020 1:26:00 PM

SIGNAGE NOTES:

1. ASI SIGNAGE INNOVATIONS - INFINITY SERIES IS SIGHTED IN THIS DRAWINGS. OBTAIN ALL PRODUCT UNDER SINGLE MANUFACTURER.
2. SIGNS MUST COMPLY WITH THE TITLE 24, DISABLED ACCESS REQUIREMENTS AND LATEST EDITION OF THE LABC.
3. SUBMIT SHOP DRAWINGS OF SIGNAGE AND OBTAIN APPROVAL FROM THE ARCHITECT PRIOR TO ANY FABRICATION.
4. ALL TEXT SHALL BE IN UPPER CASE LETTERS.
5. RESTROOM DOOR SIGNAGE SHALL BE MOUNTED CENTERED TO THE WIDTH OF THE DOOR AND THE MOUNTING HEIGHT MEASURED FROM THE FINISH FLOOR TO THE CENTER OF THE SIGNAGE.
6. RESTROOM WALL SIGNAGE MOUNTING HEIGHT SHALL BE MEASURED FROM THE FINISH FLOOR TO THE CENTER OF THE SIGNAGE.
7. ROOM IDENTIFICATION SIGNAGE MOUNTING HEIGHT SHALL BE MEASURED FROM THE FINISH FLOOR TO THE TOP OF THE SIGNAGE. SIGNS SHALL BE PLACED ON THE STRIKE SIDE OF T HE DOOR.
8. ROOM IDENTIFICATION SIGNAGE ON DOORS SHALL BE CENTERED TO THE WIDTH OF THE DOOR.
9. ALL SIGNAGE SHALL BE ACRYLIC PLASTIC MATERIAL WITH RAISED CHARACTERS AND SYMBOLS, U.N.O.
10. SIGNS WITH RAISED CHARACTERS AND BRAILLE SHALL BE LOCATED 48 INCHES (1220 mm) MINIMUM ABOVE THE FINISH FLOOR OR GROUND SURFACE MEASURED FROM THE BASELINE OF THE LOWEST LINE OF BRAILLE AND 60 INCHES (1525 mm) MAXIMUN ABOVE THE FINISH FLOOR OR GROUND SURFACE, MEASURED FROM THE BASELINE OF THE HIGHEST LINE OF RAISED CHARACTERS. MOUNTING LOCATION SHALL BE DETERMINED SO THAT A PERSON MAY APPROACH WITHIN 3 INCHES (76 mm) OF SIGNAGE WITHOUT ENCOUNTERING PROTRUDING OBJECTS OR STANDING WITHIN THE SWING OF A DOOR.

SIGN TYPES

SIGN TYPE 'A'
ALL GENDER DOOR SIGN



SIGN TYPE 'B'
ALL GENDER WALL SIGN



SIGN TYPE 'C'
RESTROOM DOOR SIGNS, ASI INFINITY SERIES, SEE SPEC.



SIGN TYPE 'D'



SIGN TYPE 'E'
RESTROOM WALL SIGNS, ASI INFINITY SERIES, SEE SPEC.



SIGN TYPE 'F'



SIGN TYPE 'G'
TACTILE SIGN

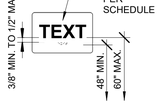

SIGN TYPE 'H'

INTERNATIONAL SYMBOL OF ACCESSIBILITY



BLUE
COLOR #15090
IN FED. STN. 595 B

WHITE

SIGN TYPE 'J'
TACTILE EXIT ROUTE SIGN

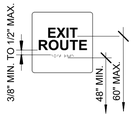

SIGN TYPE 'K'
OCCUPANCY SIGN, ASI INFINITY SERIES OR APPROVED EQUAL, SEE SPEC.



SIGN TYPE 'L'



1 1/2" H. BLUE LETTERS
COLOR #15090
IN FED. STN. 595 B

24GA. STAINLESS STEEL

SIGN TYPE 'M'

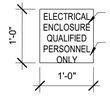

1 1/2" HIGH
COLOR: BLACK

24GA. STAINLESS STEEL

SIGN TYPE 'N'

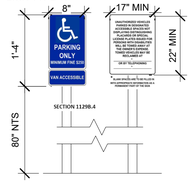

NOTE: CONTRACTOR TO VERIFY WITH LOCAL POLICE FOR MOST UPTO DATE TOWING COMPANY INFORMATION

SIGN TYPE 'P'

H. BRISHED ALUMINUM LETTERS (SIMPLE TYPE), TEXT HIGHT 4"
MOUNTING: GENERAL CONTRATOR TO SUBMIT ATTACHMENT OPTIONS AVAILABLE FROM MANUFACTURER FOR ARCHITECTS SELECTION BY ASI SIGN SYSTEMS INC. OR APPROVED EQUAL
MESSAGE: 16730

4" 16730

SIGN TYPE 'Q'
ADA PAVEMENT SYMBOL

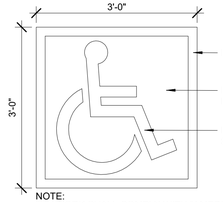

PAINTED WHITE 2" BAND

PAINTED BLUE BACKGROUND

PAINTED WHITE INTERNATIONAL SYMBOL OF ACCESSIBILITY

NOTE:
ALL WORK SHALL COMPLY WITH "AMERICAN'S WITH DISABILITIES ACT" (ADA) OF 1990.

SIGN TYPE 'R'
INTERNATIONAL SYMBOL OF ACCESSIBILITY - SITE SIGN

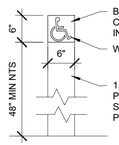

BLUE
COLOR #15090
IN FED. STN. 595 B

WHITE

1.5" X 6" GALVANIZED METAL POST. ATTACH SIGN W/ STAINLESS STEEL TAMPER PROOF SCREWS

TACTILE RESTROOM SIGNAGE AND CONTRASTING RESTROOM SYMBOLS

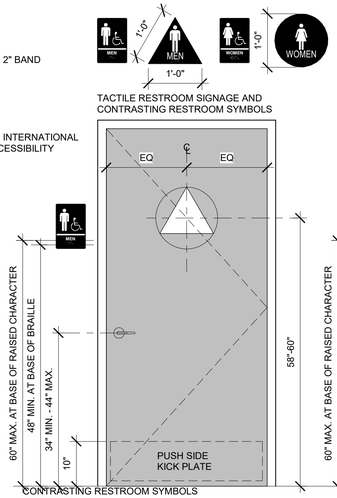

CONTRASTING RESTROOM SYMBOLS CENTERED

CONTRASTING COLOR SIGNS FOR ALL GENDER RESTROOM

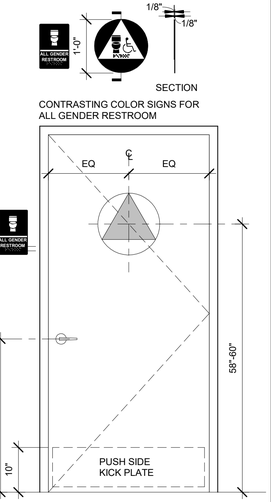

CONTRASTING RESTROOM SIGNS

1 SIGNAGE
3/4" = 1'-0"

SIGNAGE SCHEDULE

DOOR/ ROOM NO.	SIGN TYPE	MESSAGE	MOUNTING HEIGHT	LETTER COLOR	BACKGROUND COLOR	TEXT SIZE	BRAILLE	REMARKS
100A	L	MAIN ENTRY	5'-0" SIDE PANEL	BLACK	STAINLESS STL	1 1/2"	YES	6
100A/100B	-	THIS DOOR TO REMAIN UNLOCKED DURING BUSINESS HOURS	DOOR HEADER	WHITE	BLACK	-	-	-
100B	L	MAIN ENTRY	5'-0" SIDE PANEL	BLACK	STAINLESS STL	1 1/2"	YES	-
100	K	OCCUPANCY	REFER TO 1/G0.41	WHITE	DARK GREY	-	YES	-
101A	D	"FAMILY ROOM" WALL SIGNAGE	REFER TO 1/G0.41	WHITE	DARK GREY	-	YES	-
101A	G	"POOL" WALL SIGNAGE	REFER TO 1/G0.41	WHITE	DARK GREY	-	YES	-
101B	-	THIS DOOR TO REMAIN UNLOCKED DURING BUSINESS HOURS	DOOR HEADER	WHITE	BLACK	-	-	-
102	G	"MEN'S CHANGING ROOM" WALL SIGN	REFER TO 1/G0.41	WHITE	DARK GREY	-	YES	-
102	A	MEN	5'-0" ON DOOR	WHITE	DARK GREY	-	YES	6
103	G	"WOMEN'S CHANGING ROOM" WALL SIGN	REFER TO 1/G0.41	WHITE	DARK GREY	-	YES	-
103	A	WOMEN	5'-0" ON DOOR	WHITE	DARK GREY	-	YES	6
104	G	"STAFF RESTROOM" WALL SIGN	REFER TO 1/G0.41	WHITE	DARK GREY	-	YES	6
104	A	"UNISEX"	5'-0" ON DOOR	WHITE	DARK GREY	-	YES	-
105	M	"STAFFONLY" WALL SIGN	REFER TO 1/G0.41	WHITE	DARK GREY	-	YES	-
107	M	"STAFFONLY" WALL SIGN	REFER TO 1/G0.41	WHITE	DARK GREY	-	YES	-
108	A	"UNISEX"	5'-0" ON DOOR	WHITE	DARK GREY	-	YES	6
109	A	"UNISEX"	5'-0" ON DOOR	WHITE	DARK GREY	-	YES	6
109	A	"UNISEX" WALL SIGN	REFER TO 1/G0.41	WHITE	DARK GREY	-	YES	-
112	G	"JANITOR'S ROOM" WALL SIGN	REFER TO 1/G0.41	WHITE	DARK GREY	-	YES	-
113	G	"JANITOR'S ROOM" WALL SIGN	REFER TO 1/G0.41	WHITE	DARK GREY	-	YES	-
114	-	THIS DOOR TO REMAIN UNLOCKED DURING BUSINESS HOURS	DOOR HEADER	WHITE	BLACK	-	-	3,4,6
115	-	THIS DOOR TO REMAIN UNLOCKED DURING BUSINESS HOURS	DOOR HEADER	WHITE	BLACK	-	-	3,4,6
116	M	"PLUMBING CHASE ENCLOSURE QUALIFIED PERSONNEL ONLY"	REFER TO 1/G0.41	WHITE	DARK GREY	-	YES	-
117	M	"PLUMBING CHASE ENCLOSURE QUALIFIED PERSONNEL ONLY"	REFER TO 1/G0.41	WHITE	DARK GREY	-	YES	-
122	G	"BAG CHECK" WALL SIGN	REFER TO 1/G0.41	WHITE	DARK GREY	-	YES	-
123	G	"BAG CHECK" WALL SIGN	REFER TO 1/G0.41	WHITE	DARK GREY	-	YES	-
125	M	"ELECTRICAL ROOM QUALIFIED PERSONNEL ONLY"	REFER TO 1/G0.41	WHITE	DARK GREY	-	YES	-
126	M	"COMMUNICATIONS ROOM QUALIFIED PERSONNEL ONLY"	REFER TO 1/G0.41	WHITE	DARK GREY	-	YES	-
150	M	"POOL EQUIPMENT ROOM QUALIFIED PERSONNEL ONLY"	REFER TO 1/G0.41	WHITE	DARK GREY	-	YES	-
151	M	"CHLORINE STORAGE ROOM QUALIFIED PERSONNEL ONLY"	REFER TO 1/G0.41	WHITE	DARK GREY	-	YES	-
152	M	"ACID STORAGE ROOM QUALIFIED PERSONNEL ONLY"	REFER TO 1/G0.41	WHITE	DARK GREY	-	YES	-
153	M	"STORAGE ROOM QUALIFIED PERSONNEL ONLY"	REFER TO 1/G0.41	WHITE	DARK GREY	-	YES	-
200	-	THIS DOOR TO REMAIN UNLOCKED DURING BUSINESS HOURS	DOOR HEADER	WHITE	BLACK	-	-	3,4,5
202	-	THIS DOOR TO REMAIN UNLOCKED DURING BUSINESS HOURS	DOOR HEADER	WHITE	BLACK	-	-	3,4,5
203	-	THIS DOOR TO REMAIN UNLOCKED DURING BUSINESS HOURS	DOOR HEADER	WHITE	BLACK	-	-	3,4,5
204	-	THIS DOOR TO REMAIN UNLOCKED DURING BUSINESS HOURS	DOOR HEADER	WHITE	BLACK	-	-	3,4,5
EXTERIOR	P	16730	8'-6"	-	-	-	-	1,2
POOL DECK	P	WOMEN	5'-0"	-	-	-	-	1,2
POOL DECK	P	MEN	5'-0"	-	-	-	-	1,2
POOL DECK	P	FAMILY ROOMS	5'-0"	-	-	-	-	1,2

REMARKS:

1. SEE EXTERIOR ELEVATIONS FOR MORE INFO.
2. SEE SIGNAGE 1/G0.41
3. SEE GATE ELEVATIONS FOR MORE INFO.
4. ALL GATES TO RECEIVE ISA SYMBOL SIGANGE.
5. ADDITIONAL INTERIOR AND EXTERIOR REQUIRED SIGNAGE TO BE COORDINATED WITH ARCHITECT.
6. INTERNATIONAL SYMBOL OF ACCESSIBILITY PER 1/G0.41

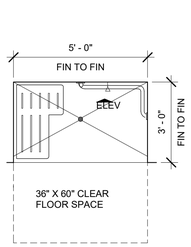

PLAN

SH3

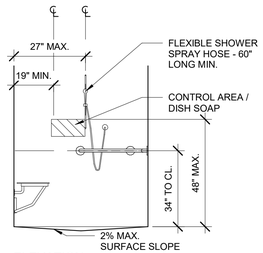

ELEVATION

SH3

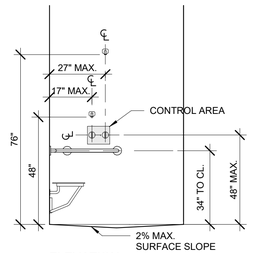

ELEVATION

SH1

4 ACCESSIBLE SHOWER TRANSFER
3/8" = 1'-0"

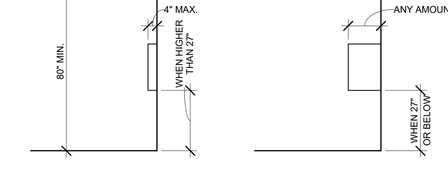

SIDE VIEW SIDE VIEW

PROTRUDING OBJECTS

2 PROTRUDING OBJECT GRAPHICS
3/8" = 1'-0"

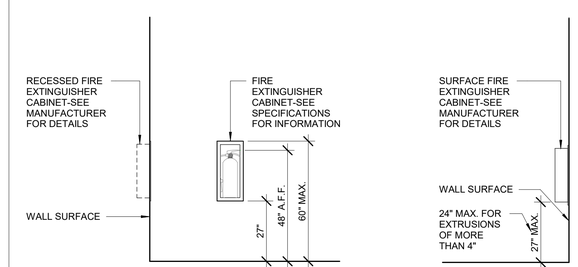

SIDE VIEW FRONT VIEW SURFACE MOUNT SIDE VIEW

F.E. CABINET MOUNTING AND ELEVATION

F.E. CABINET MOUNTING AND ELEVATION
6 3/8" = 1'-0"

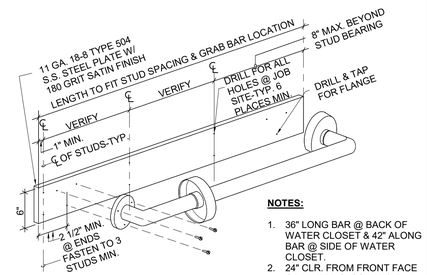

NOTES:

1. 36" LONG BAR @ BACK OF WATER CLOSET & 42" ALONG BAR @ SIDE OF WATER CLOSET.
2. 24" CLR. FROM FRONT FACE OF WATER CLOSET TO END GRAB BAR.

DRAWING NOT TO SCALE

GRAB BAR ANCHOR
1" = 1'-0"

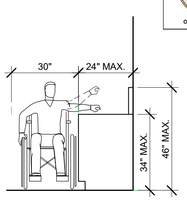

FRONT ELEVATION

MAX. REACH OVER OBSTRUCTION

3 MAX. SIDE REACH OBSTRUCTION
3/8" = 1'-0"

BUREAU OF ENGINEERING
OFFICIAL RECORD

BID SET
PROJECT ISSUE DATE: 06/22/21

CITY OF LOS ANGELES
DEPARTMENT OF PUBLIC WORKS
BUREAU OF ENGINEERING
ENGINEERING
CITY OF LOS ANGELES

GARY LEE MOORE, PE, ENV SP
CITY ENGINEER

DATE:	03/03/20	03/03/20	03/03/20	03/03/20	03/03/20
BY					

NO. REVISION DESCRIPTION DATE BY

BUILDING NO. -

INDEX NO. RP-300118

ARCHITECT/ENGINEER: JOHN SPARANO LIC. NO.: C-26244
ARCHITECTURAL DIVISION
DESIGNED BY: SPARANO + MOONEY ARCHITECTURE
DRAWN BY: JORGE BELTRAN
CHECKED BY: LUDWING JUAREZ
APPROVED BY:

LICENSED ARCHITECT JOHN P. SPARANO No. C-26244 EXP. 1-30-21 STATE OF CALIFORNIA

VERTICAL CONTROL:
HORIZONTAL CONTROL:

SHEET TITLE: ACCESSIBILITY NOTES

PROJECT: GRANADA HILLS POOL AND BATHHOUSE REPLACEMENT PROJECT

ADDRESS: 16730 CHATSWORTH STREET GRANADA HILLS, CA 91344

WORK ORDER NO. #E170517

PLAN FILE NO. #308

DRAWING NO. G0.41

SHEET O F SHEETS

PLOTTED:6/18/2020 1:26:06 PM

THE CITY OF LOS ANGELES OR ITS OFFICERS OR AGENTS SHALL NOT BE RESPONSIBLE FOR THE ACCURACY OR COMPLETENESS OF ELECTRONIC COPIES OF THIS PLAN SHEET.

TTLB TEMPLATE REVISION DATE: 02/2013
SHEET ISSUE DATE: 07/11/18
FILE PATH: BIM 360://Granada Hills Pool Renovation/A_Granada-Hills_2017.rvt

REVISION DATES (DESIGN STAGE ONLY)

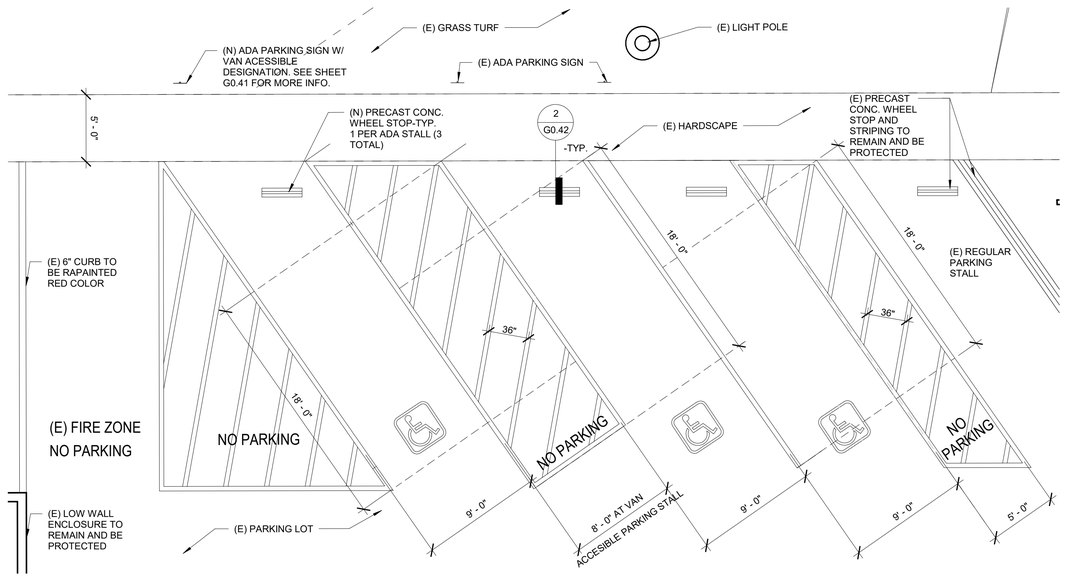

ADA PARKING NOTES: (ADA PORTIONS PER CBC SECTION 11B-502)

1. A NEW SIGN , NOT LESS THAN 17"X22" IN SIZE W/ ;ETTERING NOT LESS THAN 1" IN HEIGHT, SHALL BE POSTED IN A CONSPICIOUS PLACE AT THE ENTRANCE TO OFFSTREET PARKING FACILITIES OR IMMEDIATELY ADJACENT TO AND VISIBLE FROM EACH STALL AND CLEARLY STATE THE FOLLOWING:

   "UNAUTHORIZED VEHICLES PARKED IN DESIGNATED ACCESSIBLE SPACES NOT DISPLAYING DISTINGUISHED PLACARDS OR SPECIAL LICENSE PLATES ISSUED FOR PERSONS WITH DISSABILITIES WILL BE TOWED AWAY AT OWNERS EXPENSE. TOWED VEHICLES MAY BE RECLAIMED AT _____ OR BY TELEPHONING _____."

   ("BLANK SPACES TO BE FILLED W/ APPROPIATE INFORMATION AS A PERMANENT PART OF THE SIGN.)

2. SIGNS TO IDENTIFY ACCESSIBLE PARKING SPACES MAY BE CENTERED ON THE WALL FRONTING THE PARKING SPACE AT A MINIMUM HEIGHT OF 80" FROM THE PARKING SPACE FINISHED GRADE, GROUND OR SIDEWALK.
3. VAN ACCESSIBLE PARKING SPACES SHALL HAVE AN ADDITIONAL SIGN STATING "VAN-ACCESSIBLE" MOUNTED BELOW THE SYMBOL OF ACCESSIBILITY.
4. THE SURFACE OF EACH ACCESSIBLE PARKING STALL SHALL HAVE A SURFACE IDENTIFICATION BY PAINTING THE STALL IN BLUE AND OUTLINING ON THE GROUND WITHIN THE STALL IN A WHITE COLOR A PROFILE VIEW DEPICTING A WHEELCHAIR WITH OCCUPANT.

1 PARKING LOT LAYOUT STUDY
3/16" = 1'-0"

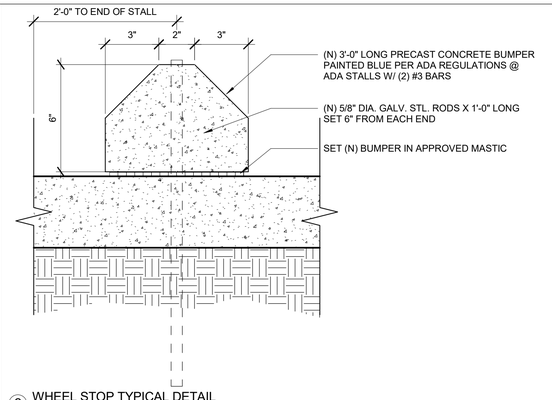

2 WHEEL STOP TYPICAL DETAIL
3" = 1'-0"

BUREAU OF ENGINEERING
OFFICIAL RECORD

THE CITY OF LOS ANGELES OR ITS OFFICERS OR AGENTS SHALL NOT BE RESPONSIBLE FOR THE ACCURACY OR COMPLETENESS OF ELECTRONIC COPIES OF THIS PLAN SHEET.

REVISION DATES (DESIGN STAGE ONLY)

TTLB TEMPLATE REVISION DATE: 02/2013
SHEET ISSUE DATE: 02/27/20
FILE PATH: BIM 360://Granada Hills Pool Renovation/A_Granada-Hills_2017.rvt

BUREAU OF ENGINEERING
CITY OF LOS ANGELES

NO.	REVISION DESCRIPTION	DATE	BY

BUILDING NO. -
INDEX NO. RP-300118

LICENSED ARCHITECT JOHN P. SPARANO C-26244 EXP. 1-30-21 STATE OF CALIFORNIA

DEPARTMENT OF PUBLIC WORKS
BUREAU OF ENGINEERING
CITY OF LOS ANGELES

GARY LEE MOORE, PE, ENV SP
CITY ENGINEER

		DATE:
ARCHITECTURAL DIVISION		
ARCHITECT/ENGINEER:	JOHN SPARANO LIC. NO.: C-26244	03/03/20
DESIGNED BY:	SPARANO + MOONEY ARCHITECTURE	03/03/20
DRAWN BY:	JORGE BELTRAN	03/03/20
CHECKED BY:	LUDWING JUAREZ	03/03/20
APPROVED BY:	JOHN SPARANO	03/03/20

BID SET
PROJECT ISSUE DATE: 06/22/21

VERTICAL CONTROL:
HORIZONTAL CONTROL:

SHEET TITLE: ACCESSIBILITY NOTES

PROJECT: GRANADA HILLS POOL AND BATHHOUSE REPLACEMENT PROJECT
ADDRESS: 16730 CHATSWORTH STREET GRANADA HILLS, CA 91344

WORK ORDER NO. #E170517
PLAN FILE NO.
DRAWING NO. G0.42
SHEET OF SHEETS

PLOTTED:8/18/2020 1:26:09 PM

STORM WATER POLLUTION CONTROL
(2017 Los Angeles Green Building Code)

FORM GRN 1

Storm Water Pollution Control Requirements for Construction Activities
Minimum Water Quality Protection Requirements for All Construction Projects

The following notes shall be incorporated in the approved set of construction/grading plans and represents the minimum standards of good housekeeping which must be implemented on all construction projects.

Construction means constructing, clearing, grading or excavation that result in soil disturbance. Construction includes structure teardown (demolition). It does not include routine maintenance to maintain original line and grade, hydraulic capacity, or original purpose of facility; emergency construction activities required to immediately protect public health and safety; interior remodeling with no outside exposure of construction material or construction waste to storm water; mechanical permit work; or sign permit work. (Order No. 01-182, NPDES Permit No. CAS004001 – Part 5: Definitions)

1. Eroded sediments and pollutants shall be retained on site and shall not be transported from the site via sheet flow, swales, area drains, natural drainage or wind.
2. Stockpiles of earth and other construction-related materials shall be covered and/or protected from being transported from the site by wind or water.
3. Fuels, oils, solvents and other toxic materials must be stored in accordance with their listing and shall not contaminate the soil nor the surface waters. All approved toxic storage containers are to be protected from the weather. Spills must be cleaned up immediately and disposed of properly and shall not be washed into the drainage system.
4. Non-storm water runoff from equipment and vehicle washing and any other activity shall be contained on the project site.
5. Excess or waste concrete may not be washed into the public way or any drainage system. Provisions shall be made to retain concrete waste on-site until it can be appropriately disposed of or recycled.
6. Trash and construction –related solid wastes must be deposited into a covered receptacle to prevent contamination of storm water and dispersal by wind.
7. Sediments and other materials shall not be tracked from the site by vehicle traffic. The construction entrance roadways must be stabilized so as to inhibit sediments from being deposited into the street/public ways. Accidental depositions must be swept up immediately and may not be washed down by rain or by any other means.
8. Retention basins of sufficient size shall be provided to retain storm water runoff on-site and shall be properly located to collect all tributary site runoff.
9. Where retention of storm water runoff on-site is not feasible due to site constraints, runoff may be conveyed to the street and the storm drain system provided that an approved filtering system is installed and maintained on-site during the construction duration.

As a covered entity under Title II of the Americans with Disabilities Act, the City of Los Angeles does not discriminate on the basis of disability and, upon request, will provide reasonable accommodation to ensure equal access to its programs, services and activities.

FORM GRN 5

2017 Los Angeles Green Building Code

MANDATORY REQUIREMENTS CHECKLIST

NEWLY CONSTRUCTED NON-RESIDENTIAL BUILDINGS

(COMPLETE AND INCORPORATE THIS FORM INTO THE PLANS)

Permit # _____ - _____ - _____ Date: _____

ITEM #	CODE SECTION	REQUIREMENT	REFERENCE SHEET (Sheet # or N/A)	COMMENTS (e.g. note #, detail # or reason for N/A)
		PLANNING AND DESIGN		
1	5.106.1	**Storm water pollution prevention**	C600	EROSION CTRL NOTES 16-24
2	5.106.4.1.1	**Short-term bicycle parking**	G0.50	KEYNOTE #9
3	5.106.4.1.2	**Long-term bicycle parking**	N/A	
4	5.106.5.2	**Designated parking**	N/A	NO NEW PARKING
5	5.106.5.3	**Electric vehicle charging**	N/A	NOT IN SCOPE
6	5.106.8	**Light pollution reduction**	E1.0, A1.10	SITE LIGHTING NOTES
7	5.106.10	**Grading and paving**	C300,C301&C302	GRADING
8	5.106.11	**Hardscape alternatives**	A1.10	KEYNOTE #14
		ENERGY EFFICIENCY		
9	5.211.1	**Solar ready buildings**	E1.0, E3.1	LOCATION OF PV PANELS AND INVERTERS
		WATER EFFICIENCY & CONSERVATION		
10	5.303.1.1	**New buildings in excess of 50,000 sqft**	N/A	BLDG. AREA IS LESS
11	5.303.1.2	**Excess consumption**	N/A	NOT ACHIEVABLE
12	5.303.2	**Water reduction**	N/A	NOT ACHIEVABLE
13	5.303.3	**Water conserving plumbing fixtures and fittings**	P0.12	GRN17
14	5.303.3.3	**Showerheads**	P0.12	GRN15 #4
15	5.304.1	**Outdoor water use in landscape areas**	IRR. PLAN L1.00-L1.02	IMPACTED VALVES OF (E) SYSTEM TO BE MODIFIED
16	5.304.3	**Irrigation controller and sensor application**	IRR. PLAN L1.00	(E) CONTROLLER INSTALLATION TO REMAIN
17	5.304.4	**Outdoor water use meters**	SURVEY AND IRR. AS-BUILTS	(E) SEPARATE IRRIGATION WATER METER
18	5.304.5	**Exterior faucets**	G0.46	GRN18 #8
19	5.305.1	**Graywater ready**	N/A	POOL EQUIPMENT ROOM
20	5.305.2	**Recycled water supply to fixtures**	N/A	(E) PLUMBING
21	5.305.3	**Cooling towers**	N/A	NO COOLING TOWERS
22	5.305.4	**Groundwater discharge**	N/A	NO DISCHARGE
		MATERIAL CONSERVATION & RESOURCE EFFICIENCY		
23	5.407.1	**Weather protection**	A7.00	#1
24	5.407.2.1	**Sprinklers**	G0.46	GRN15 #8
25	5.407.2.2.1	**Nonabsorbent floor and wall finishes**	N/A	A8.50 FINISH SCHEDULE
26		**Exterior door protection**	A2.10,A2.11	POOL EQUIPMENT ROOM
27	5.407.2.2.2	**Flashing**	A8.11	#5,#9
28	5.408.1	**Construction waste diversion**	G0.46	GREEN CODE NOTES
29	5.408.3	**Excavated soil and land clearing debris**	C300,CD01	AMOUNT OF EXPORT

As a covered entity under Title II of the Americans with Disabilities Act, the City of Los Angeles does not discriminate on the basis of disability and, upon request, will provide reasonable accommodation to ensure equal access to its programs, services and activities.

FORM GRN 5

2017 Los Angeles Green Building Code

ITEM #	CODE SECTION	REQUIREMENT	REFERENCE SHEET (Sheet # or N/A)	COMMENTS (e.g. note #, detail # or reason for N/A)
30	5.410.1	**Recycling by occupants**	A1.10,A7.13	IN TRASH ENCLOSURE
31	5.410.2	**Commissioning (> 10,000 sq ft.)**	N/A	LESS THAN 10,000 S.F.
32	5.410.2.1	– **Owner's Project Requirements (OPR)**		
33	5.410.2.2	– **Basis of Design (BOD)**		
34	5.410.2.3	– **Commissioning plan**		
35	5.410.2.4	– **Functional performance testing**		
36	5.410.2.5.1	– **Systems manual**		
37	5.410.2.5.2	– **Systems operations training**		
38	5.410.2.6	– **Commissioning report**		
39	5.410.4	**Testing and adjusting (< 10,000 sq ft)**		
40	5.410.4.2	– **Systems**	DIV. 26 SPECS—BASIS OF DESIGN	FOR ELEC. ONLY
41	5.410.4.3	– **Procedures**	SPEC 014525	LESS THAN 10,000 S.F.
42	5.410.4.3.1	– **HVAC balancing**	N/A	PROVIDE IN CONSTUCTION PHASE
43	5.410.4.4	– **Reporting**	N/A	PROVIDE IN CONSTUCTION PHASE
44	5.410.4.5	– **Operation and maintenance manual**	N/A	PROVIDE IN CONSTUCTION PHASE
45	5.410.4.5.1	– **Inspections and reports**	N/A	PROVIDE IN CONSTUCTION PHASE
		ENVIRONMENTAL QUALITY		
46	5.503.1	**Fireplace and Woodstoves**	N/A	NOT IN PROJECT
47	5.504.1.3	**Temporary ventilation**	G0.46	GRN15 #17
48	5.504.3	**Covering of duct openings and protection of mechanical equipment during construction**	G0.46	GRN15 #18
49	5.504.4	**Finish material pollutant control**	GRN11	#19
50	5.504.4.1	– **Adhesives, sealants, and caulks**		
51	5.504.4.3	– **Paints and coatings**		
52	5.504.4.3.1	– **Aerosol paints and coatings**		
53	5.504.4.3.2	– **Verification**	G0.46	GRN15 #20
54	5.504.4.4	**Carpet systems**	N/A	A8.50 FINISH SCHEDULE
55	5.504.4.4.1	**Carpet cushion**	N/A	A8.50 FINISH SCHEDULE
56	5.504.4.5	**Composite wood products**	N/A	A8.50 FINISH SCHEDULE
57	5.504.4.6	**Resilient flooring systems**	N/A	A8.50 FINISH SCHEDULE
58	5.504.5.3	**Filters**	G0.46	GRN15 #26
59	5.504.7	**Environmental tobacco smoke (ETS) control**	N/A	GRN15 #27
60	5.505.1	**Indoor moisture control**	G0.46	GRN15 #28
61	5.506.2	**Carbon dioxide (CO_2) monitoring**	N/A	NOT IN DIV.26 SCOPE
62	5.507.4.1	**Exterior noise transmission prescriptive method**	N/A	POOL EQUIPMENT ROOM FOR POOL
63		– **Exterior noise transmission for roof**	N/A	POOL EQUIPMENT ROOM FOR POOL
64		– **Exterior noise transmission for walls**	N/A	POOL EQUIPMENT ROOM FOR POOL
65		– **Exterior noise transmission for windows**	N/A	POOL EQUIPMENT ROOM FOR POOL
66	5.507.4.2	**Exterior noise transmission performance method**	N/A	POOL EQUIPMENT ROOM FOR POOL

As a covered entity under Title II of the Americans with Disabilities Act, the City of Los Angeles does not discriminate on the basis of disability and, upon request, will provide reasonable accommodation to ensure equal access to its programs, services and activities.

GREEN CODE NOTES (2017 LAGBC)

WATER EFFICIENCY AND CONSERVATION

1. FOR PROJECTS THAT INCLUDE LANDSCAPE WORK, THE LANDSCAPE CERTIFICATION, FORM GRN 12, SHALL BE COMPLETED PRIOR TO FINAL INSPECTION APPROVAL. (STATE ASSEMBLY BILL NO. 1881,5.304.1).

LANDSCAPE DESIGN PLAN

1. RECIRCULATING WATER SYSTEMS SHALL BE USED FOR WATER FEATURES..
2. A MINIMUM 3-INCH LAYER OF MULCH SHALL BE APPLIED ON ALL EXPOSED SOIL SURFACES OF PLANTING AREAS EXCEPT TURF AREAS, CREEPING OR ROOTING GROUNDCOVERS, OR DIRECT SEEDING APPLICATIONS WHERE MULCH IS CONTRAINDICATED.
3. FOR SOILS LESS THAN 6% ORGANIC MATTER IN THE TOP 6 INCHES OF SOIL, COMPOST AT A RATE OF A MINIMUM OF FOUR CUBIC YARDS PER 1,000 SQUARE FEET OF PERMEABLE AREA SHALL BE INCORPORATED TO A DEPTH OF SIX INCHES INTO THE SOIL.

IRRIGATION DESIGN PLAN

1. PRESSURE REGULATING DEVICES ARE REQUIRED IF WATER PRESSURE IS BELOW OR EXCEEDS THE RECOMMENDED PRESSURE OF THE SPECIFIED IRRIGATION DEVICES.
2. CHECK VALVES OR ANTI-DRAIN VALVES ARE REQUIRED ON ALL SPRINKLER HEADS WHERE LOW POINT DRAINAGE COULD OCCUR.

REQUIRED STATEMENTS AND CERTIFICATION

1. A DIAGRAM OF THE IRRIGATION PLAN SHOWING HYDROZONES SHALL BE KEPT WITH THE IRRIGATION CONTROLLER FOR SUBSEQUENT MANAGEMENT PURPOSES.
2. A CERTIFICATE OF COMPLETION SHALL BE FILLED OUT AND CERTIFIED BY EITHER THE SIGNER OF THE LANDSCAPE PLANS, THE SIGNER OF THE IRRIGATION PLANS, OR THE LICENSED LANDSCAPE CONTRACTOR FOR THE PROJECT.
3. AN IRRIGATION AUDIT REPORT SHALL BE COMPLETED AT THE TIME OF FINAL INSPECTION.

MATERIAL CONSERVATION AND RESOURCE EFFICIENCY

1. CONSTRUCTION WASTE SHALL BE REDUCED BY 65%. CONSTRUCTION WASTE SHALL BE HANDLED BY A CITY OF LOS ANGELES CERTIFIED HAULER.
2. NON-RESIDENTIAL ADDITION AND ALTERATIONS SHALL REQUIRE VERIFICATION THAT CALIFORNIA PROHIBITED UNIVERSAL WASTE MATERIALS ARE DISPOSED OF PROPERLY AND DIVERTED FROM LANDFILLS.

ENVIRONMENTAL QUALITY

1. THE BUILDING IS NOT EXPOSED TO A NOISE LEVEL OF 65dB L_{eq} 1-HR DURING ANY HOUR OF OPERATION.

PLANNING AND DESIGN

1. AT LEAST 25% OF THE TOTAL HARDSCAPE SHALL CONSIST OF UNCOLORED CONCRETE

FORM GRN 10

2017 Los Angeles Green Building Code

MANDATORY REQUIREMENTS CHECKLIST

ADDITIONS AND ALTERATIONS TO NON-RESIDENTIAL BUILDINGS

(COMPLETE AND INCORPORATE THIS FORM INTO THE PLANS)

Permit # _____ - _____ - _____ Date: _____

ITEM #	CODE SECTION	REQUIREMENT	REFERENCE SHEET (Sheet # or N/A)	COMMENTS (e.g. note #, detail # or reason for N/A)
		PLANNING AND DESIGN		
1	5.106.1	**Storm water drainage and retention during construction**	C600	
2	5.106.4.1.1	**Short-term bicycle parking (≥ 10 vehicular parking spaces)**	G0.50	KEYNOTE #19
3	5.106.4.1.2	**Long-term bicycle parking (≥ 10 vehicular parking spaces)**	N/A	SHORT TERM PROVIDED
4	5.106.5.2	**Designated parking (≥ 10 vehicular parking spaces)**	N/A	NO NEW PARKING
5	5.106.10	**Grading and Paving**	C200, C301,C302	GRADING
		WATER EFFICIENCY & CONSERVATION		
6	5.303.1.1	**Additions in excess of 50,000 sq ft**	N/A	BLDG. AREA IS LESS
7	5.303.1.2	**Excess consumption**	G0.46	GRN17
8	5.303.2	**Water reduction**	G0.46	GRN17
9	5.303.3	**Water conserving plumbing fixtures and fittings**	P0.12	GRN17
10	5.303.3.3	**Showerheads**	P0.12	GRN15 #4
11	5.304.1	**Outdoor water use in landscape areas**	IRRIGATION PLAN L1.00,L2.00	IMPACTED VALVES OF (E) SYSTEM TO BE MODIFIED
12	5.304.3	**Irrigation controller and sensor application**	IRRIGATION PLAN L1.00	(E) CONTROLLER IRRIGATION TO REMAIN
13	5.304.4	**Outdoor water use meters**	SURVEY AND IRRI. AS-BUILTS	(E) IRRIGATION WATER METER
14	5.304.5	**Exterior faucets**	G0.46	GRN16N #6
15	5.305.1	**Graywater ready**	N/A	ADD/ ALT WORK EXEMPT
16	5.305.2	**Recycled water supply to fixtures**	N/A	(E) PLUMBING
		MATERIAL CONSERVATION & RESOURCE EFFICIENCY		
17	5.407.1	**Weather protection**	A7.00	1
18	5.407.2.1	**Sprinklers**	G0.40	GRN15 #8
19	5.407.2.2.1	**Nonabsorbent floor and wall finishes**	N/A	A8.50 FINISH SECHEDULE
20		**Exterior door protection**	A2.10,A2.11	TRELLIS
21	5.407.2.2.2	**Flashing**	A8.11	5,9
22	5.408.1	**Construction waste diversion**	G0.46	GREEN CODE NOTES
23	5.408.2	**Universal Waste**	G0.47/A2.00	FACT SHEET/ WASTE BIN
24	5.408.3	**Excavated soil and land clearing debris**	C300,CD101	AMOUNT OF EXPORT

As a covered entity under Title II of the Americans with Disabilities Act, the City of Los Angeles does not discriminate on the basis of disability and, upon request, will provide reasonable accommodation to ensure equal access to its programs, services and activities.

FORM GRN 10

2017 Los Angeles Green Building Code

ITEM #	CODE SECTION	REQUIREMENT	REFERENCE SHEET (Sheet # or N/A)	COMMENTS (e.g. note #, detail # or reason for N/A)
25	5.410.1	**Recycling by occupants (additions that are > 30% of existing floor area)**	G0.50,A7.13 A2.10	TRASH AND RECYCLE ENCLOSURE
26	5.410.4	**Testing, adjusting and balancing**		
27	5.410.4.2	– **Systems**	DIV.26 SPECS BASIS OF DESIGN	FOR ELEC. ONLY FOR MECHANICAL ONLY
28	5.410.4.3	– **Procedures**	N/A	PROVIDE IN CONSTUCTION PHASE
29	5.410.4.3.1	– **HVAC balancing**	N/A	PROVIDE IN CONSTUCTION PHASE
30	5.410.4.4	– **Reporting**	N/A	PROVIDE IN CONSTUCTION PHASE
31	5.410.4.5	– **Operation and maintenance manual**	N/A	PROVIDE IN CONSTUCTION PHASE
32	5.410.4.5.1	– **Inspections and reports**	N/A	PROVIDE IN CONSTUCTION PHASE
		ENVIRONMENTAL QUALITY		
33	5.503.1	**Fireplace and Woodstoves**	N/A	NOT IN PROJECT
34	5.504.1.3	**Temporary ventilation**	G0.46	GRN15 # 17
35	5.504.3	**Covering of duct openings and protection of mechanical equipment during construction**	G0.46	GRN15 # 18
36	5.504.4	**Finish material pollutant control**	GRN11	
37	5.504.4.1	– **Adhesives, sealants, and caulks**		
38	5.504.4.3	– **Paints and coatings**		
39	5.504.4.3.1	– **Aerosol paints and coatings**		
40	5.504.4.3.2	– **Verification**	G0.46	GRN15 # 20
41	5.504.4.4	**Carpet systems**	N/A	A8.50/ CONC. FLOOR
42	5.504.4.4.1	**Carpet cushion**	N/A	A8.50/ CONC. FLOOR
43	5.504.4.5	**Composite wood products**	N/A	A8.50/ CONC. FLOOR
44	5.504.4.6	**Resilient flooring systems**	N/A	A8.50/ CONC. FLOOR
45	5.504.5.3	**Filters**	G0.46	GRN15 #26
46	5.504.7	**Environmental tobacco smoke (ETS) control**	N/A	NO SMOKING AREAS
47	5.505.1	**Indoor moisture control**	GRN15	NOTE #28
48	5.506.2	**Carbon dioxide (CO_2) monitoring**	N/A	NOT IN DIV.26 SCOPE
49	5.507.4.1	**Exterior noise transmission prescriptive method**	N/A	SEE ENVIRONMENTAL QUALITY NOTE #1 SHEET G045
50		– **Exterior noise transmission for roof**	N/A	SEE ENVIRONMENTAL QUALITY NOTE #1 SHEET G045
51		– **Exterior noise transmission for walls**	N/A	SEE ENVIRONMENTAL QUALITY NOTE #1 SHEET G045
52		– **Exterior noise transmission for windows**	N/A	SEE ENVIRONMENTAL QUALITY NOTE #1 SHEET G045
53	5.507.4.2	**Exterior noise transmission performance method**	N/A	SEE ENVIRONMENTAL QUALITY NOTE #1 SHEET G045
54	5.507.4.3	**Interior sound transmission**	N/A	ONE TENANT
55	5.508.1	**Ozone depletion and greenhouse gas reductions**	N/A	GRN15 #30
56	5.508.2	**Supermarket refrigerant leak reduction**	N/A	NOT SUPERMARKET

As a covered entity under Title II of the Americans with Disabilities Act, the City of Los Angeles does not discriminate on the basis of disability and, upon request, will provide reasonable accommodation to ensure equal access to its programs, services and activities.

BUREAU OF ENGINEERING
OFFICIAL RECORD

CITY OF LOS ANGELES
DEPARTMENT OF PUBLIC WORKS
BUREAU OF ENGINEERING
REVISION DESCRIPTION | DATE | BY
NO.
BUILDING NO. -
INDEX NO. RP-300118

LICENSED ARCHITECT
GARY L. P. SPARANO
No. C-26244
EXP. 4-30-21
STATE OF CALIFORNIA

CITY OF LOS ANGELES
DEPARTMENT OF PUBLIC WORKS
BUREAU OF ENGINEERING

CITY ENGINEER: GARY LEE MOORE, PE, ENV SP
ARCHITECTURAL DIVISION
ARCHITECT/ENGINEER: JOHN SPARANO LIC. NO.: C-26244
DESIGNED BY: SPARANO + MOONEY ARCHITECTURE
DRAWN BY: JORGE BELTRAN
CHECKED BY: LUDWING JUAREZ
APPROVED BY:
DATE: 03/03/20

VERTICAL CONTROL:
HORIZONTAL CONTROL:

SHEET TITLE: GREEN BUILDING CODE SUPPPLEMENTAL FORMS

PROJECT: GRANADA HILLS POOL AND BATHHOUSE REPLACEMENT PROJECT

ADDRESS: 16730 CHATSWORTH STREET
GRANADA HILLS, CA 91344

BID SET
PROJECT ISSUE DATE: 06/22/21

WORK ORDER NO. #E170517
PLAN FILE NO.
DRAWING NO. G0.45
SHEET ___ OF ___ SHEETS

PLOTTED:6/18/2020 1:26:13 PM

THE CITY OF LOS ANGELES OR ITS OFFICERS OR AGENTS SHALL NOT BE RESPONSIBLE FOR THE ACCURACY OR COMPLETENESS OF ELECTRONIC COPIES OF THIS PLAN SHEET.

TTLB TEMPLATE REVISION DATE: 02/2013
SHEET ISSUE DATE: 09/10/19
FILE PATH: BIM 360://Granada Hills Pool Renovation\A_Granada-Hills_2017.rvt

REVISION DATES (DESIGN STAGE ONLY)

VOC AND FORMALDEHYDE LIMITS

2017 Los Angeles Green Building Code
(Incorporate this form into the plans)

FORM GRN 11

The tables below are taken from the 2017 Los Angeles Green Building Code
Tables 4.504.1, 4.504.2, 4.504.3, 4.504.5, 5.504.4.1, 5.504.4.2, 5.504.4.3, 5.504.4.5

VOC CONTENT LIMITS FOR ARCHITECTURAL COATINGS[2,3]
Grams of VOC per Liter of Coating, Less Water and Less Exempt Compounds

COATING CATEGORY[4,5]	CURRENT LIMIT
Flat coatings	50
Nonflat coatings	100
Nonflat-high gloss coatings	150
Specialty Coatings	
Aluminum roof coatings	400
Basement specialty coatings	400
Bituminous roof coatings	50
Bituminous roof primers	350
Bond breakers	350
Concrete curing compounds	350
Concrete/masonry sealers	100
Driveway sealers	50
Dry fog coatings	150
Faux finishing coatings	350
Fire resistive coatings	350
Floor coatings	100
Form release compounds	250
Graphic arts coatings (sign paints)	500
High temperature coatings	420
Industrial maintenance coatings	250
Low-solids coatings[1]	120
Magnesite cement coatings	450
Mastic texture coatings	100
Metallic pigmented coatings	500
Multicolor coatings	250
Pretreatment wash primers	420
Primers, sealers, and undercoaters	100
Reactive penetrating sealers	350
Recycled coatings	250
Roof coatings	50
Rust preventative coatings	250
Shellacs	
Clear	730
Opaque	550
Specialty primers, sealers and undercoaters	100
Stains	250
Stone consolidants	450
Swimming pool coatings	340
Traffic marking coatings	100
Tub and tile refinish coatings	420
Waterproofing membranes	250
Wood coatings	275
Wood preservatives	350
Zinc-rich primers	340

[1] Grams of VOC per liter of coating, including water and including exempt compounds.
[2] The specific limits remain in effect unless revised limits are listed in subsequent columns in the table.
[3] Values in this table are derived from those specified by the California Air Resources Board, Architectural Coatings Suggested Control Measure, February 1, 2008. More information is available from the Air Resources Board.

FORMALDEHYDE LIMITS[1]
Maximum Formaldehyde Emissions in Parts per Million.

PRODUCT	CURRENT LIMIT
Hardwood plywood veneer core	0.05
Hardwood plywood composite core	0.05
Particleboard	0.09
Medium density fiberboard	0.11
Thin medium density fiberboard[2]	0.13

[1] Values in this table are derived from those specified by the California Air Resources Board, Airborne Toxic Control Measure for Composite Wood as listed in accordance with ASTME 1333. For additional information, see California Code of Regulations, Title 17, Section 93120 through 93120.12.
[2] Thin medium density fiberboard has a maximum thickness of 5/16 inches (8 mm).

SEALANT VOC LIMIT
Less Water and Less Exempt Compounds in Grams per Liter

SEALANTS	CURRENT VOC LIMIT
Architectural	250
Marine deck	760
Nonmembrane roof	300
Roadway	250
Single-ply roof membrane	450
Other	420
SEALANT PRIMERS	
Architectural	
Nonporous	250
Porous	775
Modified bituminous 500	500
Marine deck	760
Other	750

Note: For additional information regarding the limits contained in the VOC content specified in these tables, see South Coast Air Quality Management District Rule 1168.

ADHESIVE VOC LIMIT[1,2]
Less Water and Less Exempt Compounds in Grams per Liter

ARCHITECTURAL APPLICATIONS	CURRENT VOC LIMIT
Indoor carpet adhesives	50
Carpet pad adhesives	50
Outdoor carpet adhesives	150
Wood flooring adhesive	100
Rubber floor adhesives	60
Subfloor adhesives	50
Ceramic tile adhesives	65
VCT and asphalt tile adhesives	50
Drywall and panel adhesives	50
Cove base adhesives	50
Multipurpose construction adhesives	70
Structural glazing adhesives	100
Single-ply roof membrane adhesives	250
Other adhesives not specifically listed	50
SPECIALTY APPLICATIONS	
PVC welding	510
CPVC welding	490
ABS welding	325
Plastic cement welding	250
Adhesive primer for plastic	550
Contact adhesive	80
Special purpose contact adhesive	250
Structural wood member adhesive	140
Top and trim adhesive	250
SUBSTRATE SPECIFIC APPLICATIONS	
Metal to metal	30
Plastic foams	50
Porous material (except wood)	50
Wood	30
Fiberglass	80

[1] If an adhesive is used to bond dissimilar substrates together, its adhesive with the highest VOC content limit is allowed.
[2] For additional information regarding the limits contained in the VOC content specified in this table, see South Coast Air Quality Management District Rule 1168, http://www.arb.ca.gov/DRDB/SC/CURHTML/R1168.PDF.

As a covered entity under Title II of the Americans with Disabilities Act, the City of Los Angeles does not discriminate on the basis of disability and, upon request, will provide reasonable accommodation to ensure equal access to its programs, services and activities.

GREEN BUILDING CODE PLAN CHECK NOTES

2017 Los Angeles Green Building Code

FORM GRN 15

NON-RESIDENTIAL BUILDINGS

1. State on plans that the outdoor lighting systems shall be designed and installed to comply with all of the following:
   a. The minimum requirements in California Energy Code for Lighting Zones 1-4
   b. Backlight, Uplight and Glare (BUG) ratings as defined in IESNA TM-15-11
   c. Allowable BUG ratings not exceeding those shown in on Table 5.106.8 (5.106.8)
2. Separate submeters shall be installed in any building or new space within a building that is projected to consume more than 1,000 gal/day. (5.303.1.2)
3. New plumbing fixtures and fittings shall not exceed the maximum allowable flow rate specified in Section 5.303.3. (5.303.3)
4. When a shower is served by more than one showerhead, the combined flow rate of all the showerheads and/or other shower outlets controlled by a single valve shall not exceed 2.0 gallons per minute at 80psi, or the shower shall be designed to only allow one showerhead to be in operation at a time. (5.303.3.3)
5. For projects that include landscape work, the *Landscape Certification*, Form GRN 12, shall be completed prior to final inspection approval. (State Assembly Bill No. 1881)
6. Installed automatic irrigation system controllers are weather- or soil-based controllers. (WMELO, § 492.7)
7. Weather-resistant exterior wall and foundation envelope shall be detailed in conformance with Los Angeles Building Code Section 1403.2 and California Energy Code Section 150. (5.407.1)
8. Automatic landscape irrigators shall be installed such that it doesn't spray on the structure. (5.407.2.1)
9. New exterior entries and openings subject to foot traffic shall be protected against water intrusion using features such as overhangs, awnings and/or recesses for a combined depth over the entry of at least 4 feet. (5.407.2.2.1)
10. Nonabsorbent interior floor and wall finishes shall be used within at least two feet around and perpendicular to new exterior entries and/or opening subject to foot traffic. (5.407.2.2.1)
11. Exterior entries shall have flashing integrated with the drainage plane. (5.407.2.2.2)
12. Only a City of Los Angeles certified hauler will be used for hauling of construction waste. (5.408.1)
13. 100% of excavated soil and vegetation resulting from land clearing shall be reused or recycled. (5.408.3)
14. A final report for the testing and adjusting of all new systems shall be completed and provided to the field inspector prior to final approval. This report shall be signed by the individual responsible for performing these services. (5.410.4.4)
15. For all new equipment, an *Operation & Systems Manual* shall be provided to the owner and the field inspector at the time of final inspection. (5.410.4.5)
16. All new gas fireplaces must be direct-vent, sealed combustion type. Wood burning fireplaces are prohibited per AQMD Rule 445. (5.503.1, AQMD Rule 445)
17. If the new HVAC system is used during construction, use return air filters with a MERV of 8. Replace all filters immediately prior to occupancy. (5.504.1.3)
18. All new ducts and other new related air distribution components openings shall be covered with tape, plastic, or sheetmetal until the final startup of the heating, cooling and ventilating equipment. (5.504.3)
19. Architectural paints and coatings, adhesives, caulks and sealants shall comply with the Volatile Organic Compound (VOC) limits listed in Tables 5.504.4.1-5.504.4.3. (5.504.4.1-5.504.4.3)
20. The *VOC Content Verification Checklist*, Form GRN 2, shall be completed and verified prior to final inspection approval. The manufacturer's specifications showing VOC content for all applicable products shall be readily available at the job site and be provided to the field inspector for verification. (5.504.4.3.2)
21. All new carpet installed in the building interior meets the testing and product requirements of one of the following:
    a. Carpet and Rug Institute's Green Label Plus Program
    b. California Department of Public Health's Specification 01350
    c. NSF/ANSI 140 at the Gold level
    d. Scientific Certifications Systems Indoor Advantage™ Gold (5.504.4.4)
22. All new carpet cushion installed in the building interior shall meet the requirements of the Carpet and Rug Institute Green Label program. (5.504.4.4.1)
23. New hardwood plywood, particle board, and medium density fiberboard composite wood products used in the interior or exterior of the building shall meet the formaldehyde limits. (5.504.4.5, 10.504.4.5)
24. The *Formaldehyde Emissions Verification Checklist*, Form GRN 3, shall be completed prior to final inspection approval. The manufacturer's specifications showing formaldehyde content for all applicable wood products shall be readily available at the job site and be provided to the field inspector for verification. (5.504.4.5)
25. 80% of the total area receiving new resilient flooring shall comply with one or more of the following:
    a. VOC emission limits defined in the CHPS High Performance Products Database
    b. Certified under UL GREENGUARD Gold
    c. Certification under the Resilient Floor Covering Institute (RFCI) FloorScore program
    d. Meet the California Department of Public Health's Specification 01350 (5.504.4.6)
26. Mechanically ventilated buildings shall have air filter with a Minimum Efficiency Reporting Value (MERV) of 8 or higher. However, buildings within 1,000 feet of a freeway shall provide regularly occupied areas of the building with a MERV 13 filter. Filters shall be installed prior to occupancy and recommendations for maintenance with filters of the same value shall be included in the operation and maintenance manual. (5.504.5.3)
27. Designated outdoor smoking area shall be at least 25 feet from an outdoor air intake or operable windows. (5.504.7)
28. Ventilated spaces in buildings shall meet the minimum requirements of Section 121 of the California Energy Code and Chapter 4 of the California Code of Regulations, Title 8. (5.505.1)
29. Buildings that use Demand Control Ventilation shall have CO_2 sensors and ventilation controls installed in accordance with the requirements of the current edition of the California Energy Code, CCR, Title 24, Part 6, Section 121(c). (5.506.2)
30. The HVAC, refrigeration, and fire suppression equipment shall not contain CFC or Halons. (5.508.1)
31. Retail food stores of 8,000 sq. ft. or more of conditioned area that have a commercial refrigeration system with a global warming potential (GWP) of 150 or greater shall have leak reduction measures in accordance with LAGBC Section 5.508.2. Separate mechanical plan check is required. (5.508.2)

As a covered entity under Title II of the Americans with Disabilities Act, the City of Los Angeles does not discriminate on the basis of disability and, upon request, will provide reasonable accommodation to ensure equal access to its programs, services and activities.

PLUMBING FIXTURE FLOW RATES

Non-Residential Occupancies
2017 Los Angeles Green Building Code
(Incorporate this form into the plans)

FORM GRN 17

SECTION 5.303.2
WATER REDUCTION FIXTURE FLOW RATES

FIXTURE TYPE	MAXIMUM ALLOWABLE FLOW RATE
Showerheads	1.8 gpm @ 80 psi
Lavatory faucets, residential	1.2 gpm @ 60 psi[1,3]
Lavatory Faucets, nonresidential	0.4 gpm @ 60 psi[1,3]
Kitchen faucets	1.5 gpm @ 60 psi[2,4,5]
Wash fountains	1.8 gpm for every 20 in. of rim space @60 psi
Metering faucets	0.2 gallons/cycle
Metering faucets for wash fountains	0.2 gpm for every 20 in. of rim space @ 60 psi
Gravity tank type water closets	1.28 gallons/flush[6]
Flushometer tank water closets	1.28 gallons/flush[6]
Flushometer valve water closets	1.28 gallons/flush[6]
Urinals	0.125 gallons/flush
Clothes Washers	ENERGY-STAR certified
Dishwashers	ENERGY-STAR certified

[1] Lavatory faucets shall not have a flow rate less than 0.8 gpm at 20 psi.
[2] Kitchen faucets may temporarily increase flow above the maximum rate, but not above 2.2gpm @ 60psi and must default to a maximum flow rate of 1.8 gpm @ 60psi.
[3] Where complying faucets are unavailable, aerators or other means may be used to achieve reduction.
[4] Kitchen faucets with a maximum 1.8 gpm flow rate may be installed in buildings that have water closets with a maximum flush rate of 1.06 gallons/flush installed throughout.
[5] This requirement does not apply to faucets in commercial kitchens.
[6] Includes single and dual flush water closets with an effective flush of 1.28 gallons or less.
Single Flush Toilets - The effective flush volume shall not exceed 1.28 gallons (4.8 liters). The effective flush volume is the average flush volume when tested in accordance with ASME A112.19.233.2.
Dual Flush Toilets - The effective flush volume shall not exceed 1.28 gallons (4.8 liters). The effective flush volume is defined as the composite, average flush volume of two reduced flushes and one full flush. Flush volumes will be tested in accordance with ASME A112.19.2 and ASME A112.19.14.

As a covered entity under Title II of the Americans with Disabilities Act, the City of Los Angeles does not discriminate on the basis of disability and, upon request, will provide reasonable accommodation to ensure equal access to its programs, services and activities.

GREEN CODE NOTES (2017 LAGBC)

WATER EFFICIENCY AND CONSERVATION

1. FOR PROJECTS THAT INCLUDE LANDSCAPE WORK, THE LANDSCAPE CERTIFICATION, FORM GRN 12, SHALL BE COMPLETED PRIOR TO FINAL INSPECTION APPROVAL. (STATE ASSEMBLY BILL NO. 1881,5.304.1).

LANDSCAPE DESIGN PLAN

1. RECIRCULATING WATER SYSTEMS SHALL BE USED FOR WATER FEATURES..
2. A MINIMUM 3-INCH LAYER OF MULCH SHALL BE APPLIED ON ALL EXPOSED SOIL SURFACES OF PLANTING AREAS EXCEPT TURF AREAS, CREEPING OR ROOTING GROUNDCOVERS, OR DIRECT SEEDING APPLICATIONS WHERE MULCH IS CONTRAINDICATED.
3. FOR SOILS LESS THAN 6% ORGANIC MATTER IN THE TOP 6 INCHES OF SOIL, COMPOST AT A RATE OF A MINIMUM OF FOUR CUBIC YARDS PER 1,000 SQUARE FEET OF PERMEABLE AREA SHALL BE INCORPORATED TO A DEPTH OF SIX INCHES INTO THE SOIL.

IRRIGATION DESIGN PLAN

1. PRESSURE REGULATING DEVICES ARE REQUIRED IF WATER PRESSURE IS BELOW OR EXCEEDS THE RECOMMENDED PRESSURE OF THE SPECIFIED IRRIGATION DEVICES.
2. CHECK VALVES OR ANTI-DRAIN VALVES ARE REQUIRED ON ALL SPRINKLER HEADS WHERE LOW POINT DRAINAGE COULD OCCUR.

REQUIRED STATEMENTS AND CERTIFICATION

1. A DIAGRAM OF THE IRRIGATION PLAN SHOWING HYDROZONES SHALL BE KEPT WITH THE IRRIGATION CONTROLLER FOR SUBSEQUENT MANAGEMENT PURPOSES.
2. A CERTIFICATE OF COMPLETION SHALL BE FILLED OUT AND CERTIFIED BY EITHER THE SIGNER OF THE LANDSCAPE PLANS, THE SIGNER OF THE IRRIGATION PLANS, OR THE LICENSED LANDSCAPE CONTRACTOR FOR THE PROJECT.
3. AN IRRIGATION AUDIT REPORT SHALL BE COMPLETED AT THE TIME OF FINAL INSPECTION.

MATERIAL CONSERVATION AND RESOURCE EFFICIENCY

1. CONSTRUCTION WASTE SHALL BE REDUCED BY 65%. CONSTRUCTION WASTE SHALL BE HANDLED BY A CITY OF LOS ANGELES CERTIFIED HAULER.
2. NON-RESIDENTIAL ADDITION AND ALTERATIONS SHALL REQUIRE VERIFICATION THAT CALIFORNIA PROHIBITED UNIVERSAL WASTE MATERIALS ARE DISPOSED OF PROPERLY AND DIVERTED FROM LANDFILLS.

ENVIRONMENTAL QUALITY

1. THE BUILDING IS NOT EXPOSED TO A NOISE LEVEL OF 65dB L_{eq} 1-HR DURING ANY HOUR OF OPERATION.

PLANNING AND DESIGN

1. AT LEAST 25% OF THE TOTAL HARDSCAPE SHALL CONSIST OF UNCOLORED CONCRETE

WATER CONSERVATION ORDINANCE NOTES

2017 Los Angeles Green Building Code

FORM GRN 18N

NON-RESIDENTIAL BUILDINGS

1. For new buildings or additions exceeding 50,000 ft^2, install a separate water meter or sub-meter for the following areas:
   A. For each individual leased, rented, or other tenant space within the building projected to consume more than 100 gpd (380 L/day).
   B. Where potable water is used for industrial/process uses, for water supplied to the following subsystems:
      a. Makeup water for cooling towers where flow through is greater than 500 gpm (30 L/s).
      b. Makeup water for evaporative coolers greater than 6 gpm (0.04 L/s).
      c. Steam and hot-water boilers with energy input more than 500,000 Btu/h (147 kW).
   C. For each building that uses more than 100 gpd on a parcel containing multiple buildings. (5.303.1.1)
2. Provide a 20% reduction in the overall potable water use for each building. The reduction shall be based on the maximum allowable water use per plumbing fixture and fittings as required by the Los Angeles Plumbing Code. New projects having a water supply of 2"or less and additions and alterations projects may use the prescriptive method outlined in this section. (5.303.2)
3. A water budget for landscape irrigation use that conforms to the California Department of Water Resources' Model Water Efficient Landscape Ordinance (MWELO) is required for new landscape areas of 500 sqft or more. The following methods to reduce potable water use in landscape areas include, but are not limited to, use of captured rainwater, recycled water, graywater, or water treated for irrigation purposes and conveyed by a water district or public entity. (5.304.1, 5.304.2)
4. New buildings on a site with 1,000 square feet or more of cumulative landscape area shall have separate meters or submeters for outdoor water use. (5.304.4)
5. Additions and alterations on a site with 1,000 square feet of cumulative landscape area which require water service upgrade shall have separate meters or submeters for outdoor water use. (5.304.4)
6. Locks shall be installed on all publicly accessible exterior faucets and hose bibs. (5.304.5)
7. Except as provided in this section, for sites with over 500 square feet of landscape area, alternate waste piping shall be installed to permit discharge from the clothes washer, bathtub, showers, and bathroom/restrooms wash basins to be used for a future graywater irrigation system (5.305.1)
8. Except as provided in this section, where City-recycled water is available within 300 feet of the property line, water closets, urinals, floor drains, and process cooling and heating in the building shall be supplied from recycled water and shall be installed in accordance with the Los Angeles Plumbing Code. (5.305.2)
9. Cooling towers shall comply with one of the following:
   A. Shall have a minimum of 6 cycles of concentration (blowdown)
   B. A minimum of 50% of the makeup water supply to the cooling towers shall come from non-potable water sources, including treated backwash. (5.305.3)
10. Develop and construct a system for onsite reuse of the groundwater where groundwater is being extracted and discharged. Alternatively, the groundwater may be discharged to the sewer. (5.305.4)
11. Provide a hot water system complying with one of the following:
    A. The hot water system shall not allow more than 0.6 gallons of water to be delivered to any fixture before hot water arrives.
    B. Where a hot water recirculation or electric resistance heat trace wire system is installed, the branch from the recirculating loop or electric resistance heat trace wire to the fixture shall contain a maximum of 0.6 gallons. (Los Angeles Plumbing Code Section 610.4.1)

As a covered entity under Title II of the Americans with Disabilities Act, the City of Los Angeles does not discriminate on the basis of disability and, upon request, will provide reasonable accommodation to ensure equal access to its programs, services and activities.

BUREAU OF ENGINEERING
OFFICIAL RECORD

BID SET
PROJECT ISSUE DATE: 06/22/21

CITY OF LOS ANGELES
DEPARTMENT OF PUBLIC WORKS
BUREAU OF ENGINEERING

NO.	REVISION DESCRIPTION	DATE	BY

BUILDING NO. -
INDEX NO. RP-300118

ENGINEERING
CITY OF LOS ANGELES

LICENSED ARCHITECT
GARY L. MOORE
No. C-26244
EXP. 1-30-21
STATE OF CALIFORNIA

CITY ENGINEER	DATE:
	03/03/20
	03/03/20
	03/03/20
	03/03/20
	03/03/20

DEPARTMENT OF PUBLIC WORKS
CITY OF LOS ANGELES

GARY LEE MOORE, PE, ENV SP — CITY ENGINEER
ARCHITECTURAL DIVISION
ARCHITECT/ENGINEER: JOHN SPARANO LIC. NO.: C-26244
DESIGNED BY: SPARANO + MOONEY ARCHITECTURE
DRAWN BY: JORGE BELTRAN
CHECKED BY: LUDWING JUAREZ
APPROVED BY:

VERTICAL CONTROL:
HORIZONTAL CONTROL:

SHEET TITLE: GREEN BUILDING CODE SUPPLEMENTAL FORMS

PROJECT: GRANADA HILLS POOL AND BATHHOUSE REPLACEMENT PROJECT

ADDRESS: 16730 CHATSWORTH STREET GRANADA HILLS, CA 91344

WORK ORDER NO. #E170517
PLAN FILE NO.
DRAWING NO. G0.46
SHEET 0 OF SHEETS

PLOTTED:6/18/2020 1:26:15 PM

THE CITY OF LOS ANGELES OR ITS OFFICERS OR AGENTS SHALL NOT BE RESPONSIBLE FOR THE ACCURACY OR COMPLETENESS OF ELECTRONIC COPIES OF THIS PLAN SHEET.

TTLB TEMPLATE REVISION DATE: 02/2013
SHEET ISSUE DATE: 09/10/19
FILE PATH: BIM 360://Granada Hills Pool Renovation/A_Granada-Hills_2017.rvt

REVISION DATES (DESIGN STAGE ONLY)

DEPARTMENT OF TOXIC SUBSTANCES CONTROL

Our mission is to provide the highest level of safety, and to protect public health and the environment from toxic harm.

Fact Sheet, January 2010

Universal Waste Fact Sheet

California's Universal Waste Rule allows individuals and businesses to transport, handle and recycle certain common hazardous wastes, termed universal wastes, in a manner that differs from the requirements for most hazardous wastes. The more relaxed requirements for managing universal wastes were adopted to ensure that they are managed safely and are not disposed of in the trash.

What are Universal Wastes?

Universal wastes are hazardous wastes that are widely produced by households and many different types of businesses. Universal wastes include televisions, computers and other electronic devices as well as batteries, fluorescent lamps, mercury thermostats, and other mercury containing equipment, among others.

The hazardous waste regulations (Cal. Code Regs, tit. 22, div. 4.5, ch. 11 section 66261.9) identify seven categories of hazardous wastes that can be managed as universal wastes. Any unwanted item that falls within one of these waste streams can be handled, transported and recycled following the simple requirements set forth in the universal waste regulations (UWR) (Cal. Code Regs, tit. 22, div. 4.5, ch. 23)

Universal wastes are:

1. Electronic devices: Includes any electronic device that is a hazardous waste (with or without a Cathode Ray Tube (CRT)), including televisions, computer monitors, cell phones, VCRs, computer CPUs and portable DVD players.
2. Batteries: Most household-type batteries, including rechargeable nickel-cadmium batteries, silver button batteries, mercury batteries, alkaline batteries and other batteries that exhibit a characteristic of a hazardous waste
3. Electric lamps: Fluorescent tubes and bulbs, high intensity discharge lamps, sodium vapor lamps and electric lamps that contain added mercury, as well as any other lamp that exhibits a characteristic of a hazardous waste. (e.g., lead).
4. Mercury-containing equipment: Thermostats, mercury switches, mercury thermometers, pressure or vacuum gauges, dilators and weighted tubing, mercury rubber flooring, mercury gas flow regulators, dental amalgams, counterweights, dampers and mercury added novelties such as jewelry, ornaments and footwear.
5. CRTs: The glass picture tubes removed from devices such as televisions and computer monitors.
6. CRT glass: A cathode ray tube that has been accidently broken or processed for recycling.
7. Non-empty aerosol cans

Universal Wastes may not be disposed of in the trash!

STATE OF CALIFORNIA

DEPARTMENT OF TOXIC SUBSTANCES CONTROL

Our mission is to provide the highest level of safety, and to protect public health and the environment from toxic harm.

Regulatory Standards for Universal Waste

The UWR has separate requirements for of each of the three types of regulated entities:

1. Universal waste handlers
2. Universal waste transporters
3. Destination Facilities

Universal Waste Handlers

A universal waste handler is a generator of universal waste or the owner or operator of a facility that receives universal waste from another universal waste handler, accumulates universal waste, and sends universal waste to another universal waste handler, a facility that accepts hazardous waste, or a foreign country.

A universal waste handler may be:

1. A person (e.g., a household or business) who generates universal waste but does not accept universal waste from others
2. A person who accepts and accumulates universal waste generated by others at his or her facility
3. A person who accepts universal waste generated by others and conducts certain treatment and recycling activities allowed by the universal waste handler regulations

Management Requirements for Universal Waste Handlers (Cal. Code Regs, tit. 22, sections 66273.30-66273.39; additional requirements for handlers who conduct authorized treatment, Cal. Code Regs, tit. 22, sections 66273.70-.77)

- Do not dispose of universal waste or treat universal waste except as provided for in the regulations
- Notify DTSC and/or obtain an EPA identification number
- Use proper containment—non-leaking, compatible containers
- Segregate universal waste in distinct areas
- Determine if materials generated when handling/recycling are hazardous wastes
- Comply with applicable requirements for hazardous waste
- If applicable, comply with zoning requirements when storing universal wastes
- Have spill kits readily available to deal with accidental spills (mercury-containing devices)
- Use proper labeling and markings
- Accumulate universal waste no longer than one year

STATE OF CALIFORNIA

DEPARTMENT OF TOXIC SUBSTANCES CONTROL

Our mission is to provide the highest level of safety, and to protect public health and the environment from toxic harm.

- Provide personnel training to personnel who manage universal waste, or who supervise personnel who manage universal waste and keep training records
- Respond to releases of universal waste or its contents; determine if spill residuals are hazardous waste
- Track shipments by keeping records of what was received and shipped (name, address, quantities) for three years

Universal Waste Transporters

A universal waste transporter is a person engaged in the offsite transportation of universal waste by air, rail, highway or water. A universal waste transporter may be:

1. Universal waste handler carrying universal waste in his or her own vehicle
2. A package shipping service (e.g., US Postal Service; FedEx, UPS)
3. A commercial carrier (e.g., a trucking company, a hauler specializing in universal waste, or the operator of a destination facility that offers a universal waste pick-up service)
   - If you do not own or operate a facility that accepts, generates, accumulates, or stores universal waste, but you pick up and transport universal waste (e.g., electronic devices from office complexes) to a recycling or collection facility, you are a universal waste transporter. Universal waste transporters do not need to notify DTSC or submit annual reports for their transportation activities.
   - Universal waste transporters may store universal waste at a transfer facility for up to 10 days (depending on local zoning). A universal waste transporter who exceeds this limit is considered a universal waste handler and is subject to the handler requirements summarized above.

Destination Facilities

A destination facility is a fully-regulated hazardous waste facility that treats, disposes of, or recycles a specific type of universal waste. Examples of destination facilities are hazardous waste recycling facilities and hazardous waste landfills. A destination facility shall manage the universal waste in accordance with the requirements and conditions in its hazardous waste facility permit, unless authorized by section 66273.60 of title 22 of the California Code of Regulations to manage it pursuant to the reduced requirements applicable to universal waste handlers. A destination facility is required to follow certain rules for shipping universal wastes off-site and for rejecting shipments that contain universal waste and is required to keep records of all shipments received for three years. A facility that only accepts and accumulates universal waste is not a destination facility. Such a facility is regulated as a universal waste handler.

STATE OF CALIFORNIA

GREEN CODE NOTES (2017 LAGBC)

WATER EFFICIENCY AND CONSERVATION

1. FOR PROJECTS THAT INCLUDE LANDSCAPE WORK, THE LANDSCAPE CERTIFICATION, FORM GRN 12, SHALL BE COMPLETED PRIOR TO FINAL INSPECTION APPROVAL. (STATE ASSEMBLY BILL NO. 1881,5.304.1).

LANDSCAPE DESIGN PLAN

1. RECIRCULATING WATER SYSTEMS SHALL BE USED FOR WATER FEATURES..
2. A MINIMUM 3-INCH LAYER OF MULCH SHALL BE APPLIED ON ALL EXPOSED SOIL SURFACES OF PLANTING AREAS EXCEPT TURF AREAS, CREEPING OR ROOTING GROUNDCOVERS, OR DIRECT SEEDING APPLICATIONS WHERE MULCH IS CONTRAINDICATED.
3. FOR SOILS LESS THAN 6% ORGANIC MATTER IN THE TOP 6 INCHES OF SOIL, COMPOST AT A RATE OF A MINIMUM OF FOUR CUBIC YARDS PER 1,000 SQUARE FEET OF PERMEABLE AREA SHALL BE INCORPORATED TO A DEPTH OF SIX INCHES INTO THE SOIL.

IRRIGATION DESIGN PLAN

1. PRESSURE REGULATING DEVICES ARE REQUIRED IF WATER PRESSURE IS BELOW OR EXCEEDS THE RECOMMENDED PRESSURE OF THE SPECIFIED IRRIGATION DEVICES.
2. CHECK VALVES OR ANTI-DRAIN VALVES ARE REQUIRED ON ALL SPRINKLER HEADS WHERE LOW POINT DRAINAGE COULD OCCUR.

REQUIRED STATEMENTS AND CERTIFICATION

1. A DIAGRAM OF THE IRRIGATION PLAN SHOWING HYDROZONES SHALL BE KEPT WITH THE IRRIGATION CONTROLLER FOR SUBSEQUENT MANAGEMENT PURPOSES.
2. A CERTIFICATE OF COMPLETION SHALL BE FILLED OUT AND CERTIFIED BY EITHER THE SIGNER OF THE LANDSCAPE PLANS, THE SIGNER OF THE IRRIGATION PLANS, OR THE LICENSED LANDSCAPE CONTRACTOR FOR THE PROJECT.
3. AN IRRIGATION AUDIT REPORT SHALL BE COMPLETED AT THE TIME OF FINAL INSPECTION.

MATERIAL CONSERVATION AND RESOURCE EFFICIENCY

1. CONSTRUCTION WASTE SHALL BE REDUCED BY 65%. CONSTRUCTION WASTE SHALL BE HANDLED BY A CITY OF LOS ANGELES CERTIFIED HAULER.
2. NON-RESIDENTIAL ADDITION AND ALTERATIONS SHALL REQUIRE VERIFICATION THAT CALIFORNIA PROHIBITED UNIVERSAL WASTE MATERIALS ARE DISPOSED OF PROPERLY AND DIVERTED FROM LANDFILLS.

ENVIRONMENTAL QUALITY

1. THE BUILDING IS NOT EXPOSED TO A NOISE LEVEL OF 65dB L_{eq}1-HR DURING ANY HOUR OF OPERATION.

PLANNING AND DESIGN

1. AT LEAST 25% OF THE TOTAL HARDSCAPE SHALL CONSIST OF UNCOLORED CONCRETE

DEPARTMENT OF TOXIC SUBSTANCES CONTROL

Our mission is to provide the highest level of safety, and to protect public health and the environment from toxic harm.

Households and Conditionally Exempt Small Quantity Universal Waste Generators (CESQUWG)

Two categories of universal waste handlers—households and CESQUWGs—are exempt from most of the requirements of the universal waste regulations provided they comply with certain conditions. Handlers who qualify for these exemptions are not required:

- To obtain an EPA ID number or otherwise notify DTSC;
- To keep records of shipments or provide annual reports to DTSC; or
- To label their universal waste.

A household is defined to include a single detached residence (e.g., a house) or a single unit of a multiple residence unit (e.g., an apartment or condominium). Households that generate hazardous wastes other than universal wastes (e.g., paints and motor oil) can visit DTSC's household hazardous waste Web page (http://www.dtsc.ca.gov/HazardousWaste/UniversalWaste/HHW.cfm) for information on how to properly dispose of them.

A Conditionally Exempt Small Quantity Universal Waste Generator (CESQUWG) is a universal waste generator who produces less than 100 kilograms (220 pounds) of RCRA hazardous waste, including universal waste that is RCRA universal waste and less than 1 kilogram of acutely hazardous waste in a calendar month. (RCRA hazardous waste is hazardous waste that is regulated under the hazardous waste regulations adopted by the U.S. Environmental Protections Agency.)

Pursuant to section 66273.8 of title 22 of the California Code of Regulations, a generator who meets the definition of a household or a CESQUWG is exempt from universal waste handler requirements provided he or she:

1) Does not dispose of universal waste;
2) Relinquishes universal waste only to another universal waste handler, a universal waste transporter, a destination facility, or a curbside household hazardous waste collection program; and
3) Does not conduct treatment of universal waste, except for limited activities enumerated in the regulations (e.g., removing batteries, light bulbs, or mercury switches). This exemption applies only to universal waste generated by the household (e.g. light bulbs, computers, televisions, thermostats, cell phones, etc.), not to universal waste accepted from other people.

Where can I send universal wastes?

A handler may not send universal waste to a municipal solid waste (garbage) landfill or a non-hazardous waste recycling center. All handlers of universal waste must relinquish their universal waste to one of the following:

STATE OF CALIFORNIA

DEPARTMENT OF TOXIC SUBSTANCES CONTROL

Our mission is to provide the highest level of safety, and to protect public health and the environment from toxic harm.

1. Another handler (typically a business that specializes in collecting, storing, accumulating and shipping universal wastes). Examples:
   - A household hazardous waste facility
   - A "Take-it-Back Partner" such as a retailer or manufacturer
   - A collection event
2. A universal waste transporter. Examples:
   - A curbside HHW collection program
   - A package service (e.g., postal service, UPS)
   - A destination facility that offers a pick-up service
3. A universal waste destination facility (generally, a facility with a permit to treat, store, or dispose of hazardous waste).

Search engines available to find locations accepting universal waste in your area: E-Recycle.org; Earth911.org; CalRecyle database; DTSC map; HHW list;

For more information, see DTSC's Universal Waste Web page at: http://www.dtsc.ca.gov/HazardousWaste/UniversalWaste/index.cfm

Contact your DTSC regulatory assistance officer at: (800) 728-6942

STATE OF CALIFORNIA

BUREAU OF ENGINEERING

OFFICIAL RECORD

ENGINEERING
CITY OF LOS ANGELES

BUREAU OF ENGINEERING

NO.	REVISION DESCRIPTION	DATE	BY

BUILDING NO. -

INDEX NO. RP-300118

LICENSED ARCHITECT GARY L. P. SPARANO No. C-26244 EXP. 1-30-21 STATE OF CALIFORNIA

CITY ENGINEER DATE: 03/03/20 03/03/20 03/03/20 03/03/20 03/03/20

DEPARTMENT OF PUBLIC WORKS
CITY OF LOS ANGELES

GARY LEE MOORE, PE, ENV SP CITY ENGINEER
ARCHITECTURAL DIVISION
ARCHITECT/ENGINEER: JOHN SPARANO LIC. NO.: C-26244
DESIGNED BY: Designer
DRAWN BY: Author
CHECKED BY: Checker
APPROVED BY: Approver

VERTICAL CONTROL:
HORIZONTAL CONTROL:

SHEET TITLE: GREEN BUILDING CODE SUPPLEMENTAL FORMS

PROJECT: GRANADA HILLS POOL AND BATHHOUSE REPLACEMENT PROJECT

ADDRESS: 16730 CHATSWORTH STREET GRANADA HILLS, CA 91344

BID SET
PROJECT ISSUE DATE: 06/22/21

WORK ORDER NO. #E170517

PLAN FILE NO.

DRAWING NO. G0.47

SHEET OF SHEETS

PLOTTED:6/18/2020 1:26:17 PM

THE CITY OF LOS ANGELES OR ITS OFFICERS OR AGENTS SHALL NOT BE RESPONSIBLE FOR THE ACCURACY OR COMPLETENESS OF ELECTRONIC COPIES OF THIS PLAN SHEET.

TTLB TEMPLATE REVISION DATE: 02/2013
SHEET ISSUE DATE: 02/25/20
FILE PATH: BIM 360://Granada Hills Pool Renovation\A_Granada-Hills_2017.rvt

REVISION DATES (DESIGN STAGE ONLY)

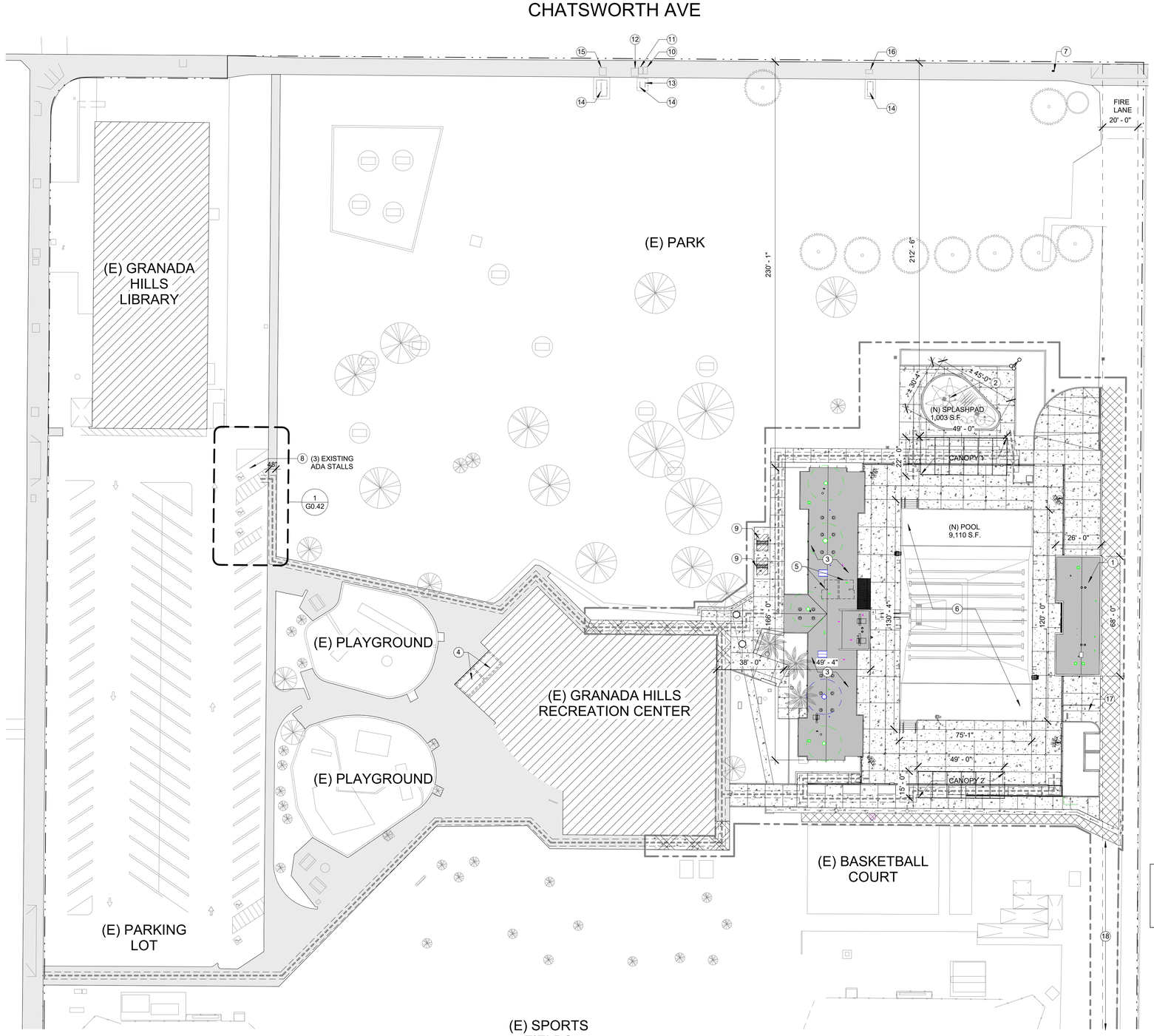

1 PLOT PLAN
1" = 30'-0"

PLOT PLAN GENERAL NOTES

1. PRIOR TO COMMENCEMENT OF WORK, CONTRACTOR IS TO CONDUCT A FIELD STUDY OF ADA ACCESSIBLE PATH OF TRAVEL. ITEMS TO BE OBSERVED ARE, BUT NOT LIMITED TO THE FOLLOWING:
   A. (E) CONCRETE WALK PATH TO BE UNIFORM. G.C. TO FIX ANY (E) CRACKS, HAZARDS AND UNEVEN PAVEMENT. CONTRACTOR TO FIX ANY CRACKS, UNEVENESS, AND/ OR OBSTRUCTIONS FROM ADA PATH.
   B. CONTRACTOR TO ENSURE UNIFORMITY OF ADA ACCESSIBLE PATH AND VERIFY ALL CROSS SLOPES ARE IN COMPLIANCE WITH APPLICABLE CODES. PATH OF TRAVEL SHALL BE 48" MIN. WIDTH WALKWAY, 5% MAX. SLOPE IN THE DIRECTION OF TRAVEL,2% MAX. CROSS SLOPE 11B-403.3,11B-403.5
   C, IN CASE OF ANY MODIFICATIONTO PATH, CONTRACTOR IS TO COORDINATE MODIFICATION W. (E) IRRIGATION SYSTEMS AND RELOCATE, AND/OR REROUTE ACCORDINGLY.
2. GENERAL CONTRACTOR TO REPAIR ANY DAMAGE CAUSED TO IRRIGATION SYSTEM AND LANDSCAPING DURING CONSTRUCTION
3. FIRE DEPARTMENT VEHICULAR ACCESS ROADS MUST BE MAINTAINED IN A SERVICEABLE MANNER PRIOR TO AND DURING THE TIME OF CONSTRUCTION. CFC 503.4
4. A LOCKABLE KEY BOX SHALL BE PROVIDED AT ALL GATED VEHICULAR ENTRANCES, AND AT FACILITY ENTRANCES AS REQUIRED BY THE FIRE CODE OFFICE IN ACCORDANCE WITH CFC 506.
5. S.L.D. FOR MORE INFO.
6. STAGING AREA LOCATION TO BE PROVIDED BY LA-BOE.
7. FLOOR AND FLOOR GROUND SURFACES SHALL BE STABLE, FIRM, AND SLIP RESISTANT PER CBC SECTION 11B-302.1. ALL NEW CONCRETE SLABS TO BE SEALED. FINISH TO BE MEDIUM BROOM FINISH. CONTRACTOR TO PROVIDE MOCK-UPS OF MEDIUM AND HEAVY FINISH.
8. VERTICAL CHANGES IN LEVEL FOR FLOOR OR GROUND SURFACES MAY BE 1/4 INCH HIGH MAX. AND WITHOUT EDGE TREATMENT. CHAGES IN LEVEL GREATER TAHN 1/4 INCH AND NOT EXCEEDING 1/2" IN HEIGHT SHALL BE BEVELED WITH A SLOPE NOT STEEPER THAN 1:2 PER CBC SECTION 11B-303
9. ABRUPT CHANGES IN LEVEL EXCEEDING 4 INCHES IN A VERTICAL DIMENSION BETWEEN WALKS, SIDEWALKS OR OTHER PEDESTRIAN WAYS AND ADJACENT SURFACES OR FEAUTURES SHALL BE IDENTIFIED BY WARNING CURBS AT LEAST 6 INCHES IN HEIGHT ABOVE THE WALK OR SIDEWALK SURFACE OR BY GUARDS OR HANDRAILS WITH A GUIDE RAILED 2 INCHES MIN. AND 4 INCHES MAX. ABOVE THE SURFACE OF THE WALK OR SIDEWALK. THESE REQUIREMENTS DO NOT APPLY BETWEEN A WALK OR SIDEWALK AND AN ADJACENT STREET OR DRIVEWAY PER CBC SECTION 11B-303.5
10. S.C.D. 3/C5.02 FOR CURB DETAIL WHERE OCCURS.
11. THE CONSTRUCTION SHALL NOT RESTRICT A FIVE-FOOT CLEAR AND UNOBSTRUCTED ACCESS TO ANY WATER OR POWER DISTRIBUTION FACILITIES (POWER POLES, PULL-BOXES, TRANSFORMERS, VAULTS, PUMPS, VALVES, METERS, APPURTENANCES, ETC.) OR TO THE LOCATION OF THE HOOK-UP. THE CONSTRUCTION SHALL NOT BE WITHIN TEN FEET OF ANY POWER LINES-WETHER OR NOT THE LINES ARE LOCATED ON THE PROPERTY. FAILURE TO COMPLY MAY CAUSE CONSTRUCTION DELAYS AND/ OR ADDITIONAL EXPENSES.
12. AN APPROVED SEISMIC SHUTOFF VALVE WILL BE INSTALLED ON THE FUEL GAS LINE ON THE DOWNSTREAM SIDE OF TH EUTILITY METER AND BE RIGIDLY CONNECTED TO THE EXTERIOR OF THE BUILDING OR STRUCTURE CONTAINING THE FUEL GAS "PIPING" (PER ORDINANCE 170,158) (INCLUDES COMMERCIAL ADDITIONS AND TI WORK OVER $10,000); SEPARATE PLUMBING PERMIT IS REQUIRED.)
13. SUCTION OUTLETS SHALL BE DESIGNED AND INSTALLED IN ACCORDANCE WITH ANSI/APSP-7 (3109.5)
14. PROVIDE THE FOLLOWING REQUIREMENTS FOR THE PUBLIC POOLS:
   A. SHOW THE POOL ENCLOSURE ON THE PLAN. 5' HIGH FENCE WALL AND SELF CLOSING, SELF-LATCHING GATE ARE REQUIRED. (3109.3)
   B. THE LATCH TO BE A MINIMUM 4.5 FT ABOVE THE GROUND (6109 (a))
   C POOLS FOR MORE THAN 3 UNITS ON SITE SHALL BE APPROVAL BY HEALTH DEPARTMENT
   D POOLS SHALL BE IN COMPLIANCE WITH THE REQUIREMENT FOR ACCESS TO THE PUBLIC ACCOMODATIONS BY PHYSICALLY HANDICAPPED PERSONS.
15. GLAZING IN WALLS AND FENCES USED AS THE BARRIER FOR INDOOR AND OUTDOOR SWIMMING POOLS AND SPAS WHEN ALL OF THE FOLLOWING CONDITIONS ARE PRESENT:
   i. THE BOTTOM EDGE OF THE GLAZING IS LESS THAN 60 INCHES (1525 MM) ABOVE THE POOL SIDE OF THE GLAZING.
   ii. THE GLAZING IS WITHIN 5 FEET (1525 MM) OF A SWIMMING POOL OR SPA WATER'S EDGE.
   iii. GLAZING IN WALLS ENCLOSING STAIRWAY LANDINGS OR WITHIN 5 FEET (1525 MM) OF THE BOTTOM AND TOP OF STAIRWAYS WHERE THE BOTTOM EDGE OF THE GLASS IS LESS THAN 60 INCHES (1525 MM) ABOVE WALKING SURFACE.
16. PROVIDE ULTRA-LOW FLUSH WATER CLOSETS FOR ALL NEW CONSTRUCTION. EXISTING SHOWER HEADS AND TOILETS MUST BE ADAPTED FOR LOW WATER CONSUMPTION.
17. A COPY OF THE EVALUATION REPORT AND/OR CONDITIONS OF LISTING SHALL BE MADE AVAILABLE ON TH EJOB SITE.
18. SEE SHEET SP-1 FOR POOL DIMENSIONS.

GRAPHIC LEGEND

- EXTENT OF WORK & LINE OF CONSTRUCTION FENCE
- ADA PATH OF TRAVEL 48" MIN. WIDTH
- PROPERTY LINE
- (E) HARDSCAPE TO BE PROTECTED
- (N) HARDSCAPE, S.C.D.
- (N) HARDSCAPE, PATTERN TO MATCH (E) S.C.D.
- (N) ASPHALT PAVEMENT, S.C.D.

KEYNOTE LEGEND

1 (N) POOL EQUIPMENT BUILDING. (E) TO BE DEMOLISHED IN ITS ENTIRETY.
2 (N) SPLASH PAD. 1,003 S.F. S.AQ.D. SHEET WP-1 FOR MORE INFO.
3 (E) BATHHOUSE TO BE RENOVATED.
4 (E) MEN AND WOMEN RESTROOMS.
5 (N) FAMILY ROOMS/ UNISEX RESTROOMS.
6 (N) SWIMMING POOL. 9,110 S.F. S.AQ.D. SHEET SP-1 FOR MORE INFO.
7 (E) FIRE HYDRANT.
8 (E) ADA PARKING STALLS TO REMAIN AND BE RESTRIPED TO COMPLY WITH CBC SECTION 11B-502.
9 (N) 8-BIKE CAPACITY SINGLE BIKE RACK PER LAMC 12.21A4. SEE SHEET SEE PARKING REQUIREMENTS NOTES ON SHEET G0.21 FO RMORE INFO.
10 (E) 2" WATER METER (#90337817) SERVING BATHHOUSE BUILDING, S.C.D. FOR MORE INFO.
11 (E) 2" WATER METER (#96117475) SERVING GYMNASIUM BUILDING, S.C.D. FOR MORE INFO.
12 (E) 6" FIRE SERVICE WATER METER (#F0689) SERVING GYMNASIUM BUILDING.
13 (N) BACKFLOW PREVENTER ASSEMBLY, S.C.D. FOR MORE INFO.
14 (E) BACKFLOW PREVENTER ASSEMBLY TO REMAIN AND BE PROTECTED DURING CONSTRUCTION.
15 (E) 4" WATER METER (#90056536) SERVING MECHANICAL BUILDING, S.C.D. FOR MORE INFO.
16 (E) 2" IRRIGATION WATER METER (#96201270), S.L.D. FOR MORE INFO.
17 (N) STANDARD 9'-0"W X 18'-0"L PARKING STALL.
18 REMOVE (E) A/C PAVEMENT & EXCAVATE TO RUBIO AVE. FOR INSTALLATION OF NEW INFILTRATION SYSTEM & ASSC. PIPING, S.C.D. FOR MORE INFO.

BUREAU OF ENGINEERING OFFICIAL RECORD

BID SET
PROJECT ISSUE DATE: 06/22/21

CITY OF LOS ANGELES
DEPARTMENT OF PUBLIC WORKS
BUREAU OF ENGINEERING

GARY LEE MOORE, PE, ENV SP
CITY ENGINEER

NO.	REVISION DESCRIPTION	DATE	BY

BUILDING NO. -
INDEX NO. RP-300118

LICENSED ARCHITECT JOHN P. SPARANO No. C-28244 EXP. 1-30-21 STATE OF CALIFORNIA

ENGINEERING
CITY OF LOS ANGELES

		DATE:
CITY ENGINEER		03/03/20
ARCHITECTURAL DIVISION		03/03/20
ARCHITECT/ENGINEER:	JOHN SPARANO LIC. NO.: C-28244	03/03/20
DESIGNED BY:	SPARANO + MOONEY ARCHITECTURE	03/03/20
DRAWN BY:	JORGE BELTRAN	03/03/20
CHECKED BY:	LUDWING JUAREZ	03/03/20
APPROVED BY:		03/03/20

VERTICAL CONTROL:
HORIZONTAL CONTROL:
SHEET TITLE: PLOT PLAN
PROJECT: GRANADA HILLS POOL AND BATHHOUSE REPLACEMENT PROJECT
ADDRESS: 16730 CHATSWORTH STREET GRANADA HILLS, CA 91344

WORK ORDER NO. #E170517
PLAN FILE NO. #308
DRAWING NO. G0.50
SHEET 0 OF SHEETS

PLOTTED:6/18/2020 1:26:30 PM

THE CITY OF LOS ANGELES OR ITS OFFICERS OR AGENTS SHALL NOT BE RESPONSIBLE FOR THE ACCURACY OR COMPLETENESS OF ELECTRONIC COPIES OF THIS PLAN SHEET.

TTLB TEMPLATE REVISION DATE: 02/2013
SHEET ISSUE DATE: 12/11/17
FILE PATH: BIM 360://Granada Hills Pool Renovation/A_Granada-Hills_2017.rvt

REVISION DATES (DESIGN STAGE ONLY)

TTLB TEMPLATE REVISION DATE: 02/2013
SHEET ISSUE DATE: 01/04/18 FILE PATH: BIM 360://Granada Hills Pool Renovation/A_Granada-Hills_2017.rvt

REVISION DATES (DESIGN STAGE ONLY)

THE CITY OF LOS ANGELES OR ITS OFFICERS OR AGENTS SHALL NOT BE RESPONSIBLE FOR THE ACCURACY OR COMPLETENESS OF ELECTRONIC COPIES OF THIS PLAN SHEET.

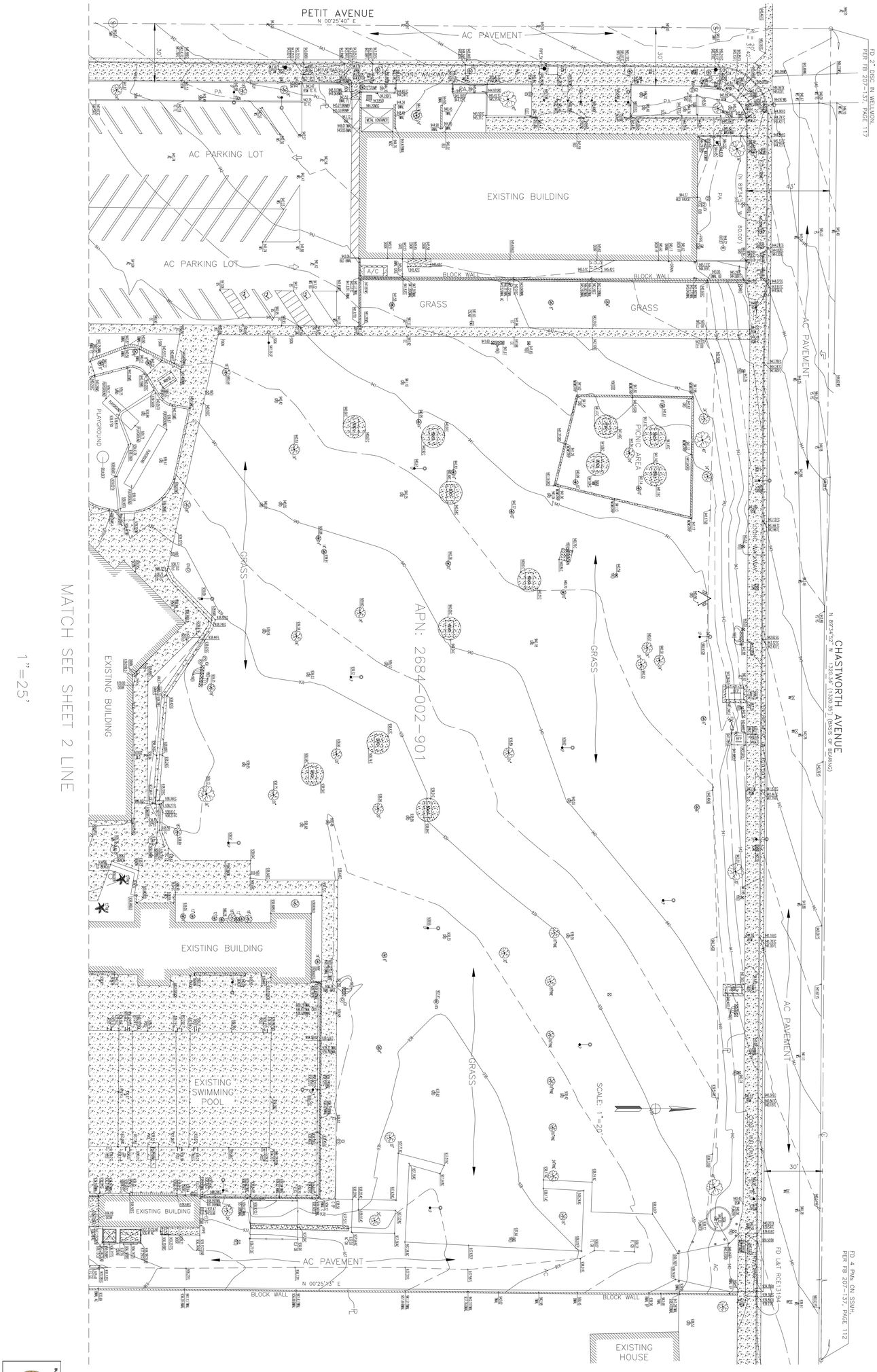

BID SET
PROJECT ISSUE DATE: 06/22/21

CITY OF LOS ANGELES — DEPARTMENT OF PUBLIC WORKS — BUREAU OF ENGINEERING

PLOTTED:03/03/2020 2:53:10 PM

SHEET 1 OF SHEETS | DRAWING NO. | PLAN-FILE NO. | WORK ORDER NO. #E170517

VERTICAL CONTROL:
HORIZONTAL CONTROL:

SHEET TITLE: SURVEY

PROJECT: GRANADA HILLS POOL AND BATHHOUSE REPLACEMENT PROJECT

ADDRESS: 16730 CHATSWORTH STREET GRANADA HILLS, CA 91344

GARY LEE MOORE, PE, ENV SP	CITY ENGINEER
SURVEYING DIVISION	DATE:
SURVEYOR: FLORENTINO FERRER, FERRER & ASSOCIATES LIC. NO.: LS 5775	3/3/2020
SURVEYED BY: PETER DINH, FERRER & ASSOCIATES	3/3/2020
DRAWN BY: PETER DINH, FERRER & ASSOCIATES	3/3/2020
CHECKED BY: KIM RASAY, FERRER & ASSOCIATES	3/3/2020
APPROVED BY: FLORENTINO FERRER, PLS, FERRER & ASSOCIATES	3/3/2020

FLORENTINO FERRER, LAND SURVEYOR, No. 5775, STATE OF CALIFORNIA, exp. 6-30-20, P.L.S. 5775
FLORENTINO FERRER, L.S. 5775

NO.	REVISION DESCRIPTION	DATE	BY

INDEX NO. **RP-300118**
BUILDING NO. -

ENGINEERING
CITY OF LOS ANGELES

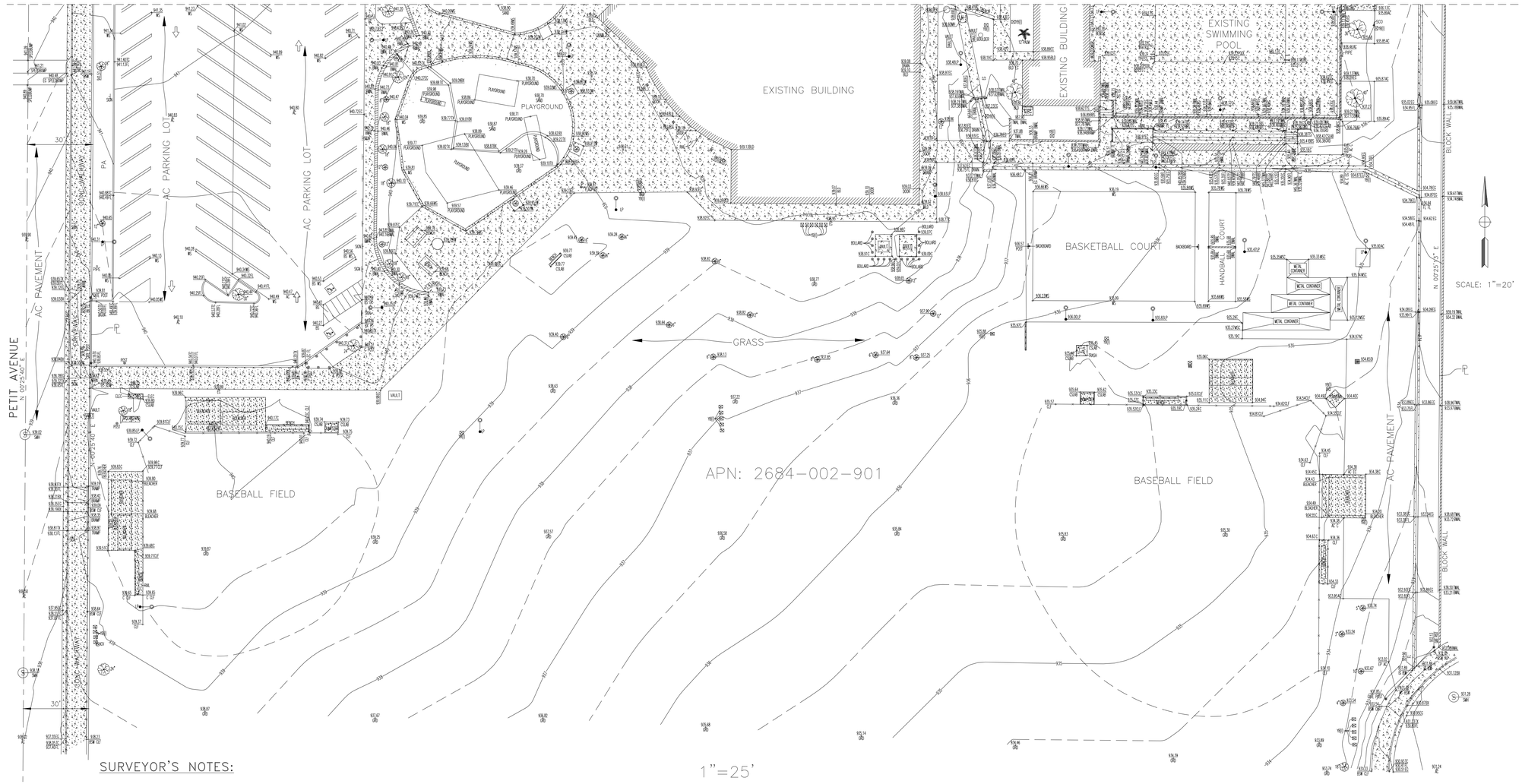

SURVEYOR'S NOTES:

1. THIS MAP REPRESENTS A TOPOGRAPHIC SURVEY OF VISIBLE FIELD CONDITIONS AT THE TIME OF THIS SURVEY.
2. THE HORIZONTAL BASIS OF BEARING IS THE CENTERLINE OF CHATSWORTH AVENUE BEING N 89°34'52" W AS SHOWN ON TRACT NO. 30883, M.B. 798, PAGES 33–34, RECORDED IN THE OFFICE OF THE COUNTY RECORDER OF THE LOS ANGELES COUNTY.
3. THE VERTICAL BASIS IS A LOS ANGELES CITY BENCHMARK, 04–03302, BEING A CITY OF L.A. PBM *STMPD 04–03302 1974* 4FT S OF S CURB LINE CHATSWORTH ST; 37.5FT W OF BC CURB RETURN W OF HAYVENHURST AVE; SW COR OF CB ELEVATION = 934.605' (NAVD 1988 – 2000 ADJUSTMENT)
4. CONTOUR INTERVAL = 0.50'

ABBREVIATIONS

A/C = AIR CONDITION
AC = ASPHALT CONCRETE
APRN = APRON OF DRIVEWAY
BLD = BUILDING
BFP = BACK FLOW PREVENTER
BRAMP = BOTTOM OF RAMP
BSW = BACK OF SIDEWALK
C OR CONC = CONCRETE
CLF = CHAIN LINK FENCE
DI = DROP INLET
EC = EDGE OF CONCRETE
EG = EDGE OF GUTTER
EP = EDGE OF PAVEMENT
FDC = FIRE DEPARTMENT CONNECTION
FH = FIRE HYDRANT
FL = FLOWLINE
FNC = FENCE
GB = GRADE BREAK
GRD = GROUND
GUY = GUIDE WIRE
IPB = IRRIGATION PULLBOX
PB = PULLBOX
PP = POWER POLE
TC = TOP OF CURB
TOE = TOE OF SLOPE
TRAMP = TOP OF RAMP
TS = TOP OF SLOPE
WM = WATER METER
WS = WHITE STRIPE
WV = WATER VALVE
YB = YARD BOX (SEWER, GAS WATER, ELECTRICAL, IRRIGATION)
YS = YELLOW STRIPE

LEGENDS

BUILDING
CONCRETE
CHAIN LINK FENCE
RAIL
A/C AIR CONDITION
BACKBOARD
DOWNSPOUT
E ELECTRICAL
FIRE HYDRANT
ICV IRRIGATION CONTROL VALVE
LIGHT POLE
MH MANHOLE
PALM
POWER POLE
PB PULLBOX
S SEWER MANHOLE
SIGN
SLPB STREET LIGHT PULLBOX
TRAFFIC SIGNAL
TRAFFIC SIGNAL
TREE
TSPB TRAFFIC SIGNAL PULLBOX
VAULT VAULT
WATER VALVE
YARD BOX (S,W,G,E,I)

SURVEYOR'S STATEMENT:

I hereby state that I am a Professional Land Surveyor of the State of California, that this map, consisting of 2 sheets represents a survey made by me or under my supervision.

DATE: 01/08/2018

LICENSED LAND SURVEYOR — FLORENTINO FERRER — EXP. 6-30-20 — P.L.S 5775 — STATE OF CALIFORNIA

FLORENTINO FERRER L.S. 5775

BUREAU OF ENGINEERING — OFFICIAL RECORD

THE CITY OF LOS ANGELES OR ITS OFFICERS OR AGENTS SHALL NOT BE RESPONSIBLE FOR THE ACCURACY OR COMPLETENESS OF ELECTRONIC COPIES OF THIS PLAN SHEET.

TTLB TEMPLATE REVISION DATE: 02/2013
SHEET ISSUE DATE: 01/04/18
FILE PATH: BIM 360://Granada Hills Pool Renovation/A_Granada-Hills_2017.rvt

REVISION DATES (DESIGN STAGE ONLY)

BUREAU OF ENGINEERING
DEPARTMENT OF PUBLIC WORKS
CITY OF LOS ANGELES

ENGINEERING
CITY OF LOS ANGELES

NO.	REVISION DESCRIPTION	DATE	BY

INDEX NO. RP-300118
BUILDING NO. -

GARY LEE MOORE, PE, ENV SP
CITY ENGINEER

SURVEYING DIVISION

SURVEYOR:	FLORENTINO FERRER, FERRER & ASSOCIATES LIC. NO.: LS 5775	3/3/2020
SURVEYED BY:	PETER DINH, FERRER & ASSOCIATES	3/3/2020
DRAWN BY:	PETER DINH, FERRER & ASSOCIATES	3/3/2020
CHECKED BY:	KIM RASAY, FERRER & ASSOCIATES	3/3/2020
APPROVED BY:	FLORENTINO FERRER, PLS, FERRER & ASSOCIATES	3/3/2020

VERTICAL CONTROL:
HORIZONTAL CONTROL:
SHEET TITLE: SURVEY

PROJECT: GRANADA HILLS POOL AND BATHHOUSE REPLACEMENT PROJECT
ADDRESS: 16730 CHATSWORTH STREET GRANADA HILLS, CA 91344

BID SET
PROJECT ISSUE DATE: 06/22/21

WORK ORDER NO. #E170517
PLAN FILE NO.
DRAWING NO. 2
SHEET 2 OF SHEETS

PLOTTED:03/03/2020 2:53:10 PM

GENERAL NOTES:

1. ALL WORK PERFORMED IN THIS CONTRACT SHALL CONFORM TO:
   A. THE PROJECT SPECIFICATIONS AND ALL SAFETY REGULATION; CODES AND REQUIREMENTS PERTINENT TO THE PROJECT CONSTRUCTION.
   B. ALL SHALL CONFORM TO THE LATEST EDITION AND SUPPLEMENTS OF THE STANDARD SPECIFICATIONS FOR PUBLIC WORKS CONSTRUCTION (SSPWC) AND AMERICAN PUBLIC WORKS ASSOCIATION (APWA).
   C. CITY OF LOS ANGELES STANDARD PLANS AND SPECIFICATIONS.
   D. PROJECT GEOTECHNICAL REPORT.
2. IT IS THE RESPONSIBILITY OF THE CONTRACTOR TO BE KNOWLEDGEABLE TO INTERPRET AND APPLY THE ABOVE CODES AND SPECIFICATIONS.
3. ALL WORK SHALL COMPLY WITH THE REQUIREMENTS OF THE WORK SPECIFIED ON THE DRAWINGS, SPECIFICATIONS AND WITHIN THE VARIOUS NOTES SHOWN HEREIN.
4. THE EXISTING CONDITIONS SHOWN DIAGRAMMATICALLY ON THE PLANS ORIGINATED FROM AS BUILT DRAWINGS AND FIELD SURVEY. IT SHALL BE THE RESPONSIBILITY OF THE CONTRACTOR TO VISIT THE JOB SITE AND VERIFY THE EXACT EXISTING CONDITIONS BEFORE SUBMITTING HIS/HER BID. ANY DISCREPANCY SHALL BE REPORTED IMMEDIATELY TO THE CITY ENGINEER FOR PROPER ACTION.
5. THE CONTRACTOR SHALL PROTECT ALL EXISTING STRUCTURES IN THE AREA OF WORK WHICH ARE NOT INCLUDED IN THIS CONSTRUCTION. ANY DAMAGE RESULTING FROM THIS WORK SHALL BE REPAIRED AND/OR REPLACED AT NO ADDITIONAL COST TO THE CITY.
6. UNCLOG, CLEAN AND FLUSH THE ENTIRE SITE DRAINAGE SYSTEM AFTER PAVING AND IMMEDIATELY BEFORE A RAIN FORECAST.
7. ALL EXISTING STREET IMPROVEMENTS, UNLESS OTHERWISE INDICATED HEREIN TO BE REMOVED, SHALL BE PROTECT IN PLACE. THESE ITEMS INCLUDE LIGHT POLES, POWER POLES, SIGNAL POLES AND APPURTENANCES.
8. CONTRACTOR SHALL NOTIFY ALL UTILITY OWNERS BOTH IN PRIVATE PROPERTY AND IN PUBLIC RIGHT OF WAY FOR EXISTING LATERALS TO BE REMOVED OR CAPPED.
9. UTILITIES TO BE VERIFIED IN FIELD TO ENSURE EXISTING UTILITY TO REMAIN. CONTRACTOR IS RESPONSIBLE FOR THE RELOCATION IF REQUIRED. ALL EXISTING/RELOCATED UTILTIES PER NEW SITE LAYOUT WILL BE PROTECTED IN PLACE.

UNDERGROUND SERVICE ALERT:

10. BEFORE COMMENCING ANY EXCAVATION ON–SITE AND OFF–SITE, THE CONTRACTOR SHALL OBTAIN AN UNDERGROUND SERVICE ALERT INQUIRY I.D. NUMBER BY CALLING 1–800–422–4133. TWO WORKING DAYS SHALL BE ALLOWED AFTER THE I.D. NUMBER IS OBTAINED AND BEFORE THE EXCAVATION WORK IS STARTED THAT UTILITY COMPANIES CAN BE NOTIFIED.

PROTECTION AND RESTORATION OF EXISTING IMPROVEMENTS:

11. THE CONTRACTOR SHALL BE RESPONSIBLE FOR THE PROTECTION OF PUBLIC AND PRIVATE PROPERTY ADJACENT TO THE WORK PER SECTION 7–9 OF THE STANDARD SPECIFICATIONS FOR PUBLIC WORKS CONSTRUCTION.

REMOVALS:

12. EXISTING STRUCTURES AND SUBSTRUCTURES WHICH ARE INDICATED TO BE REMOVED IN THIS CONSTRUCTION DOCUMENTS SHALL BE TOTALLY REMOVED AND DISPOSED OF OFFSITE, UNLESS OTHERWISE INDICATED. EXISTING FACILITIES WHICH ARE DISCOVERED DURING CONSTRUCTION (INCLUDING WALLS, FOOTINGS, AND FOUNDATIONS) SHALL BE REPORTED TO AND COORDINATED WITH THE GEOTECHNICAL ENGINEER OF RECORD AS TO THEIR REMOVAL.
13. FOLLOWING DEMOLITION, THE CONSTRUCTION AREA SHOULD BE CLEARED OF ANY VEGETATION AND STRIPPED OF MISCELLANEOUS DEBRIS AND OTHER DELETERIOUS MATERIAL. VEGETATION AND ORGANIC MATTER SHOULD NOT BE INCORPORATED INTO THE COMPACTED FILL.
14. ALL SITE PREPARATION AS INDICATED SHALL BE MADE UNDER THE CONTINUOUS INSPECTION OF THE GEOTECHNICAL ENGINEER. SECURE THE REQUIRED PERMITS FROM THE CALIFORNIA DIVISION OF INDUSTRIAL SAFETY FOR THE CONSTRUCTION OF TRENCHES, SHORING OR EXCAVATIONS WHICH ARE 5 FEET OR DEEPER OR WORK THAT MAY JEOPARDIZE THE SAFETY OF WORKERS. SHORING CALCULATIONS SHALL BE PROVIDED BY THE CONTRACTOR AT HIS EXPENSE AS REQUIRED FOR APPROVAL AND PERMITTING.
15. THE CONTRACTOR SHALL KEEP THE CONSTRUCTION AREA SUFFICIENTLY DAMPENED TO CONTROL DUST CAUSED BY WORK ACTIVITIES AS REQUIRED BY THE CITY ENGINEER. THE CONTRACTOR SHALL PROVIDE 6' HIGH TEMPORARY FENCING WITH VISUAL BARRIER AROUND THE PROJECT LIMITS AND A TEMPORARY CONSTRUCTION ACCESS ON–SITE.
16. ALL WORK IN THE PUBLIC RIGHT OF WAY REQUIRES APPROVAL BY THE CITY OF LOS ANGELES DEPARTMENT OF TRANSPORTATION AND PUBLIC WORKS BEFORE CONSTRUCTION BEGINS. CONTRACTOR SHALL SECURE AND PAY FOR ALL PERMITS INCLUDING UTILITY CONNECTIONS REQUIRED PRIOR TO CONSTRUCTION.
17. VOIDS RESULTING FROM REMOVAL OF STRUCTURES SHALL BE FILLED WITH SUITABLE MATERIALS APPROVED BY THE CITY INSPECTOR AND COMPACTED TO 95% MINIMUM DENSITY PER ASTM D–1557 AND THE RECOMMENDATIONS WITHIN THE SOILS ENGINEERING EXPLORATION REPORT.
18. UPON COMPLETION OF PROJECT, CONTRACTOR SHALL REMOVE EXISTING CONSTRUCTION FENCING, APPURTENANCES AND OFFICE TRAILERS FROM THE SITE. PAVEMENT SHALL BE PATCHED AND REPAIRED TO MATCH ADJACENT PAVEMENT AND APPROVED BY THE CITY ENGINEER AS APPLICABLE.
19. ANY ADDITIONAL SURVEYS OR TESTING AS A RESULT OF CONTRACTOR ERROR OR MISINFORMATION WILL BE CHARGED TO THE CONTRACTOR.
20. THE CONSTRUCTION SHALL NOT RESTRICT A FIVE FOOT CLEAR AND UNOBSTRUCTED ACCESS TO ANY WATER OR POWER DISTRIBUTION FACILITIES (POWER POLES, PULL–BOXES, TRANSFORMERS, VAULTS, PUMPS, VALVES, METERS, APPURTENANCES, ETC.) OR TO THE LOCATION OF THE HOOK UP, THE CONSTRUCTION SHALL NOT BE WITHIN TEN FEET OF ANY POWER LINES WHETHER OR NOT THE LINES ARE LOCATED ON THE PROPERTY. FAILURE TO COMPLY MAY CAUSE CONSTRUCTION DELAYS AND/OR ADDITIONAL EXPENSES.
21. TRIM TREE ROOTS AS NECESSARY OR GRADED ON AREAS TO BE PAVED. TRIM ROOTS UNDER THE DIRECTION OF A CERTIFIED CITY APPROVED ARBORIST. NOTIFY THE CITY ENGINEER PRIOR TO TRIMMING OF TREES.

GENERAL NOTES:

22. ADJUST TO GRADE EXISTING MANHOLE RIMS, VALVE BOXES AND ELECTRICAL VAULT LIDS TO DESIGN GRADES WITHIN THE IMPROVEMENT AREA, UNLESS NOTED OTHERWISE. CONTRACTOR TO VERIFY LOCATION AND NUMBER OF MANHOLE RIMS, VALVE BOXES AND ELECTRICAL VAULT LIDS IN THE FIELD PRIOR TO BIDDING.
23. IF EXISTING UTILITIES ARE EXPOSED OR DETERMINED TO EXIST UNDER THE ROUGH GRADING SITE, CONTRACTOR SHALL PROVIDE A FLAGGED STAKE THAT INDICATE THEIR LOCATION, TYPE OF UTILITY, SIZE, PIPE MATERIAL, AND DEPTH. STAKES SHALL BE INSTALLED NO LESS THAN 50' ON CENTER ON STRAIGHT LINES AND AT BENDS.
24. SITE BOUNDARIES, EASEMENTS, DRAINAGE DEVICES AND RESTRICTED USE AREAS SHALL BE LOCATED PER CONSTRUCTION STAKING BY A LICENSED SURVEYOR PAID FOR BY THE CONTRACTOR. PRIOR TO GRADING, AS REQUESTED BY THE CITY ENGINEER, ALL PROPERTY LINES, EASEMENTS, AND RESTRICTED USE AREAS SHALL BE STAKED.
25. IT IS THE RESPONSIBILITY OF THE CONTRACTOR TO PROVIDE THE CITY ENGINEER WITH A COMPLETE SET OF REPRODUCIBLE & RED MARKED PRINT "AS–BUILT" DRAWINGS OF ALL WORK PERFORMED UNDER THIS CONTRACT, AS SHOWN WITHIN THESE CONSTRUCTION DRAWINGS. ALL FIELD CHANGES SHALL BE SHOWN IN DETAIL ON THE "AS–BUILT" DRAWINGS AND SHALL INCORPORATE AS A MINIMUM, NEW ELEVATIONS, GRADES AND ALIGNMENT OF UNDERGROUND FACILITIES WITH DIMENSIONAL TIES TO BUILDING OR OTHER VISIBLE IMPROVEMENTS.
26. CONTRACTOR IS RESPONSIBLE FOR THE RESTORATION TO THEIR EXISTING CONDITION OF THE FACILITIES WHICH WERE INTENDED TO REMAIN IN PLACE. AND ALL REPAIRS TO ANY DAMAGED MATERIALS OR FACILITIES SHALL BE MADE BY THE CONTRACTOR AT NO ADDITIONAL COST TO THE CITY.
27. CONSTRUCT OFFSITE WORK TO COMPLY WITH THE REQUIREMENTS OF THE LOCAL GOVERNING AGENCY. SECURE AND PAY FOR REQUIRED CONSTRUCTION PERMITS.

GENERAL GEOTECHNICAL NOTES:

1. ALL WORK MUST BE IN COMPLIANCE WITH THE RECOMMENDATIONS INCLUDED IN THE GEOTECHNICAL CONSULTANT'S REPORT(S) AND THE APPROVED GRADING PLANS AND SPECIFICATIONS.
2. SITE GEOTECHNICAL INVESTIGATION WAS PREPARED BY GEOTECHNICAL ENGINEERING DIVISION W.O. #E170517A, GED FILE #17–074 DATED AUGUST 22, 2017, ENTITLED "GEOTECHNICAL ENGINEERING REPORT GRANADA HILLS POOL REPLACEMENT PROJECT WITH ADDRESS 16730 CHATSWORTH STREET TRACT: SUBDIVISION NO.1 OF THE PROPERTY OF THE PORTER LAND AND WATER COMPANY BLOCK: NONE, LOT: 2 SEC 18 T2N R15W LOS ANGELES, CALIFORNIA. RECOMMENDATIONS OF THE SOILS REPORT AND SUPPLEMENTALS / ADDENDUMS ARE PART OF THIS NOTE AND SHALL BE PERFORMED BY THE CONTRACTOR AS APPLICABLE. IF DISCREPANCIES OCCUR THE GEOTECHNICAL REPORT SHALL GOVERN.
3. ALL EARTH WORK SHALL BE PERFORMED IN ACCORDANCE WITH THE GEOTECHNICAL RECOMMENDATIONS IN GEOTECHNICAL REPORT AND THE LADBS GRADING DIVISION REQUIREMENTS. ALL EARTHWORK SHOULD BE PERFORMED UNDER THE OBSERVATION AND TESTING OF A QUALIFIED GEOTECHNICAL ENGINEER.
4. THE SOIL BENEATH NEW PAVEMENTS, POOL DECK, AND SPLASH PAD SHALL BE OVER–EXCAVATED TO A DEPTH OF 24 INCHES BELOW EXISTING GRADING OR 24 INCHES BELOW THE FINISHED GRADE, WHICHEVER IS GREATER AND SHALL RESULT IN 24" OF COMPACTED FILL. THE EXCAVATION SHALL EXTEND LATERALLY AT LEAST 2 FEET BEYOND THE EDGE OF THE PAVEMENT OR TO THE PROPERTY BOUNDARY, WHICHEVER IS LESS.
5. THE SOIL BENEATH THE POOL SHALL BE EXCAVATED TO THE DESIGN SUBGRADE OR TO THE NATIVE SOIL, WHICHEVER IS GREATER. AS ADDITIONAL 12" SHALL BE EXCAVATED SO THAT THE POOL IS UNDERLAIN BY 12" OF FILL.
6. THE SOIL BENEATH SECONDARY (I.E. NON–STRUCTURAL) STRUCTURES SHALL BE OVER–EXCAVATED TO A DEPTH THAT SHALL RESULT IN AT LEAST 24 INCHES OF COMPACTED FILL BENEATH THE FOOTING. THIS 24 INCHES INCLUDES SUBGRADE PREPARATION. THE EXCAVATION SHALL EXTEND LATERALLY AT LEAST 2 FEET BEYOND THE EDGE OF THE FOOTING OR TO THE PROPERLY BOUNDARY, WHICHEVER IS LESS.
7. THE SOIL BENEATH SHALLOW FOUNDATIONS SHALL BE OVER–EXCAVATED TO A DEPTH THAT SHALL RESULT IN AT LEAST 30 INCHES OF COMPACTED FILL BENEATH THE FOOTING. THIS 30 INCHES INCLUDES SUBGRADE PREPARATION. THE EXCAVATION SHALL EXTEND LATERALLY AT LEAST 2 FEET BEYOND THE EDGE OF THE FOOTING OR TO THE PROPERLY BOUNDARY, WHICHEVER IS LESS.
8. ALL EXCAVATION BOTTOMS SHALL BE SCARIFIED TO A DEPTH OF 6 INCHES, MOISTURE CONDITIONED TO WITHIN 3 PERCENT ABOVE THE OPTIMUM MOISTURE CONTENT, AND COMPACTED TO AT LEAST 95 PERCENT RC. ALL EXCAVATION BOTTOMS MUST BE APPROVED BY A REPRESENTATIVE OF GEO AND BY THE LADBS GRADING INSPECTOR PRIOR TO BACK FILL.
9. UNSURCHARGED, TEMPORARY VERTICAL EXCAVATIONS SHALL NOT EXCEED 5 FEET. UNSURCHARGED EXCAVATIONS GREATER THAN 5 FEET AND TO A MAXIMUM OF 10 FEET SHALL BE SLOPED AT A 1.5:1 (H: V) OR FLATTER INCLINATION FROM THE GROUND SURFACE TO THE BOTTOM OF THE EXCAVATION. IF DEEPER EXCAVATIONS ARE PROPOSED, THEY SHALL BE REVIEWED BY GEO AND SUPPLEMENTAL RECOMMENDATION MAY BE REQUIRED.
10. PRIOR TO EXCAVATION, IT IS RECOMMENDED THAT WALLS, STRUCTURES, OR PORTIONS OF STRUCTURES WITHIN A HORIZONTAL DISTANCE OF 1½ TIMES THE DEPTH OF THE EXCAVATION BE INSPECTED TO DETERMINE THEIR PRESENT CONDITION.
11. PHOTOGRAPHS SHOULD BE TAKEN OF PRECONSTRUCTION CONDITIONS AND LEVEL SURVEYS SHOULD BE PERFORMED.
12. THE CONTRACTOR SHALL NOT POUR FOOTINGS UNTIL AN APPROVAL LETTER IS ISSUED BY THE DEPARTMENT OF BUILDING AND SAFETY, GRADING DIVISION FOR THE COMPACTION CERTIFICATION. THE CONTRACTOR MAY EXCAVATE IN COMPACTED FILL FOR FOUNDATION ELEMENTS BEFORE THE FILL CERTIFICATION APPROVAL LETTER IS ISSUED, BUT DOES SO AT HIS/HER OWN RISK.
13. THE GEOTECHNICAL ENGINEER IS TO APPROVE THE KEY OR BOTTOM OF EXCAVATION AND LEAVE A CERTIFICATE ON THE SITE FOR THE CITY INSPECTOR. THE CITY INSPECTOR IS TO BE NOTIFIED BEFORE ANY GRADING BEGINS AND FOR BOTTOM INSPECTION BEFORE FILL IS PLACED. FILL MAY NOT BE PLACED WITHOUT THE APPROVAL OF THE CITY INSPECTOR.
14. THE GEOTECHNICAL ENGINEER SHALL PROVIDE SUFFICIENT INSPECTIONS DURING THE PREPARATION OF THE NATURAL GROUND AND THE PLACEMENT AND COMPACTION OF THE FILL TO BE SATISFIED THAT THE WORK IS BEING PERFORMED IN ACCORDANCE WITH THE PLAN AND APPLICABLE CODE REQUIREMENTS.
15. FOUNDATION AND WALL EXCAVATIONS MUST BE INSPECTED AND APPROVED BY THE GEOTECHNICAL ENGINEER, PRIOR TO THE PLACING OF STEEL OR CONCRETE.
16. WHERE FOUNDATIONS ARE DESIGNED TO DERIVE SUPPORT IN ENGINEERED FILL, AS A MINIMUM, FOOTINGS SHALL BE FOUNDED ON AT LEAST 30 INCHES OF PROPERLY COMPACTED FILL MATERIAL AND SHALL BE FOUNDED AT LEAST 24 INCHES BELOW THE LOWEST ADJACENT GRADE.
17. TRENCH EXCAVATIONS FOR UTILITY PIPES MAY BE BACKFILLED WITH ONSITE SOILS UNDER THE OBSERVATION OF A REPRESENTATIVE OF GEO. AFTER UTILITY PIPES HAVE BEEN LAID, PROPERLY BEDDED, AND COVERED PER THE PROJECT SPECIFICATIONS, THEY SHALL BE BACK FILLED TO THE GROUND SURFACE OR DESIGN SUBGRADE WITH CONTROLLED BACKFILL. CONTROLLED BACKFILL SHALL BE MOISTURE CONDITIONED, PLACED AND COMPACTED IN ACCORDANCE WITH THE RECOMMENDATIONS PRESENTED ABOVE. DENSIFICATION BY FLOODING OR JETTING IS NOT ALLOWED.
18. FOR ON–SITE PAVEMENT ADAPTED PER GEOTECHNICAL REPORT AND SUPPLEMENTAL REPORT, REFER TO SHEET C5.00 AND C5.01 PAVEMENT DETAILS FOR PAVEMENT THICKNESSES, COMPACTION REQUIREMENTS, AND OTHER CONDITIONS.

FILL NOTES:

1. FILL SHALL NOT BE PLACED UNTIL STRIPPING OF VEGETATION, REMOVAL OF UNSUITABLE SOILS, AND INSTALLATION OF SUBDRAIN (IF ANY) HAVE BEEN INSPECTED AND APPROVED BY THE SOIL ENGINEER. THE CITY ENGINEER MAY REQUIRE A "STANDARD TEST METHOD FOR MOISTURE, ASH, ORGANIC MATTER, PEAT OR OTHER ORGANIC SOILS" ASTM D–2974–87 ON ANY SUSPECT MATERIAL. DETRIMENTAL AMOUNTS OF ORGANIC MATERIAL SHALL NOT BE PERMITTED IN FILLS. SOIL CONTAINING SMALL AMOUNTS OF ROOTS MAY BE ALLOWED PROVIDED THAT THE ROOTS ARE IN A QUANTITY AND DISTRIBUTED IN A MANNER THAT WILL NOT BE DETRIMENTAL TO THE FUTURE USE OF THE SITE AND THE GEOTECHNICAL ENGINEER APPROVED THE USE OF SUCH MATERIAL.
2. NO FILL TO BE PLACED, UNTIL THE GEOTECHNICAL ENGINEER OR CITY ENGINEER HAS INSPECTED AND APPROVED THE BOTTOM OF EXCAVATION. FILL MATERIAL INCLUDING BASE MATERIAL SHALL BE OBTAINED FROM A DESIGNATED ON–SITE STOCKPILE AREAS, AS DIRECTED BY THE OAR. ANY ADDITIONAL IMPORT FILL MATERIAL SHALL HAVE AN EXPANSION INDEX OF LESS THAN "20". IN NO CASE SHALL ON–SITE CLAY SOILS BE PLACED IN THE UPPER 24 INCHES BENEATH CONCRETE SLABS AND WALKS AND BEHIND RETAINING WALLS AS DIRECTED IN THE GEOTECHNICAL INVESTIGATION REPORT.
3. FOR ONSITE OR NATIVE SOILS; THE GEOTECHNICAL ENGINEER SHOULD BE PRESENT TO REVIEW THE TYPES OF MATERIALS ENCOUNTERED IN THE EXCAVATIONS IN ORDER TO CONFIRM THEIR RE–USABILITY.
4. THE EXISTING PEA GRAVEL FILL BY ITSELF IS NOT ACCEPTABLE FOR REUSE AS BACK FILL, BUT IT MAY BE BLENDED WITH THE NATIVE SOIL. FILL MATERIALS SHALL CONSIST OF THE NATIVE SOIL OR APPROVED IMPORT SOIL. IMPORT SOIL AND ONSITE BLENDED NATIVE SOIL/PEA GRAVEL SHALL BE PREDOMINANTLY GRANULAR (MINIMUM 80% PASSING THE NO. 4 SIEVE AND BETWEEN 10% AND 35% PASSING THE NO. 200 SIEVE, NON–EXPENSIVE (EI LESS THAN 20). ALL FILL SHALL BE FREE OF ORGANIC OR INORGANIC DEBRIS, CONTAMINATION AND MATERIALS WITH ANY DIMENSION LARGER THAN 3 INCHES. PROPOSED IMPORT SOIL SHALL BE REVIEWED BY GEO FOR APPROVAL PRIOR TO DELIVERY TO THE JOB SITE. GEO SHALL BE NOTIFIED A MINIMUM OF THREE WORKING DAYS PRIOR TO SCHEDULED DELIVER TO THE SITE.
5. FILL MATERIAL SHALL BE PLACED IN LOOSE LIFTS NOT EXCEEDING 8 INCHES IN THICKNESS, MOISTURE–CONDITIONED TO WITHIN 3 PERCENT ABOVE THE OPTIMUM MOISTURE CONTENT AND MECHANICALLY COMPACTED. CLAYEY SOILS (I.E. THOSE WITH 15% OR MORE FINER THAN 0.005 MM SIEVE) ARE NOT ANTICIPATED AT THIS TIME. PRIMARY STRUCTURAL FILL AND THE UPPER 1–FOOT OF SUBGRADE BENEATH PAVEMENTS SHALL BE COMPACTED TO A MINIMUM OF 95 PERCENT RC. ANY AGGREGATE BASE SHOULD BE MOISTURE CONDITIONED TO WITHIN 3 PERCENT ABOVE OPTIMUM AND COMPACTED TO A MINIMUM OF 95 PERCENT RC.
6. FILL PLACEMENT AND COMPACTION SHALL BE OBSERVED AND TESTED BY A CERTIFIED COMPACTION TESTING AGENCY WORKING UNDER THE DIRECT SUPERVISION OF GEO. COMPACTED FILL SOILS SHALL BE KEEP MOIST, (AT OR SLIGHTLY ABOVE THE SPECIFIED MOISTURE CONTENT AT THE TIME OF COMPACTION) BUT NOT FLOODED, UNTIL COVERED WITH SUBSEQUENT CONSTRUCTION. IF COMPACTED FILL SOILS BECOME SOFTENED OR DISTURBED, THEY SHALL BE REPLACED OR RECOMPACTED AT THE DIRECTION OF GEOTECHNICAL ENGINEER BEFORE ADDITIONAL FILL OR CONSTRUCTION IS PLACED. CERTIFICATION AND INSPECTION APPROVALS FOR COMPROMISED SOILS ARE VOID AND INVALID.

SHEET INDEX

CIVIL:

C100 GENERAL NOTES, LEGENDS & ABBREVIATIONS
C101 GENERAL NOTES, LEGENDS & ABBREVIATIONS
CD1.01 DEMOLITION PLAN
C200 SITE CONTROL PLAN
C300 SITE GRADING PLAN
C301 ENLARGED GRADING PLAN
C302 ENLARGED GRADING PLAN
C303 GRADING SECTIONS
C400 SITE UTILITY PLAN
C401 SITE LID PLAN
C500 MISCELLANEOUS DETAILS
C501 MISCELLANEOUS DETAILS
C502 MISCELLANEOUS DETAILS
C503 MISCELLANEOUS DETAILS
C504 MISCELLANEOUS DETAILS
C505 MISCELLANEOUS DETAILS
C506 MISCELLANEOUS DETAILS
C600 EROSION CONTROL PLAN
C601 EROSION CONTROL DETAILS



VICINITY MAP
NOT TO SCALE

BUREAU OF ENGINEERING
OFFICIAL RECORD

THE CITY OF LOS ANGELES OR ITS OFFICERS OR AGENTS SHALL NOT BE RESPONSIBLE FOR THE ACCURACY OR COMPLETENESS OF ELECTRONIC COPIES OF THIS PLAN SHEET.

REVISION DATES (DESIGN STAGE ONLY)

TTLB TEMPLATE REVISION DATE: 02/2013
SHEET ISSUE DATE: 01 January, 2000 FILE PATH:

BUREAU OF ENGINEERING
ENGINEERING
CITY OF LOS ANGELES

NO.	REVISION DESCRIPTION	DATE	BY

BUILDING NO. -
INDEX NO. RP-300118

REGISTERED PROFESSIONAL ENGINEER
PERFECTO C. ADAAN
No. C36079
Exp. 6/30/20
CIVIL
STATE OF CALIFORNIA

BUREAU OF PUBLIC WORKS
DEPARTMENT OF PUBLIC WORKS
CITY OF LOS ANGELES

GARY LEE MOORE, PE, ENV SP
CITY ENGINEER

	DATE:
ARCHITECTURAL DIVISION	
ARCHITECT/ENGINEER: VIRGILIO ADAANAN LIC. NO.: C36079	03/03/2020
DESIGNED BY: VIRGILIO ADAANAN	03/03/2020
DRAWN BY: AUTUMN WAGGONER	03/03/2020
CHECKED BY: VIRGILIO ADAANAN	03/03/2020
APPROVED BY: VIRGILIO ADAANAN	03/03/2020

VERTICAL CONTROL:
HORIZONTAL CONTROL:

SHEET TITLE: GENERAL NOTES, LEGEND, AND ABBREVIATIONS

PROJECT: GRANADA HILLS POOL AND BATHHOUSE REPLACEMENT PROJECT
ADDRESS: 16730 CHATSWORTH STREET GRANADA HILLS, CA 91344

BID SET
PROJECT ISSUE DATE: 06/22/21

WORK ORDER NO. #E170517
PLAN FILE NO. #308
DRAWING NO. C100
SHEET 1 OF SHEETS 19

PLOTTED: 09/18/2019 1:00:00 PM

DEMOLITION LEGEND:

REMOVE EXISTING CONCRETE PAVING

REMOVE EXISTING ASPHALT PAVING

REMOVE EXISTING STRUCTURE

CLEAR, GRUB, AND REMOVE EXISTING TURF/PLANTER/SHRUBS AND ROOTS IN THEIR ENTIRETY.

PROTECT IN PLACE EXISTING CONCRETE

SITE PLAN LEGEND:

ASPHALT PAVEMENT OVER CRUSHED AGGREGATE BASE

CONCRETE PAVEMENT OVER CRUSHED AGGREGATE BASE

TURF OR PLANTER AREA (SEE LANDSCAPING DRAWINGS)

WALL (SEE ARCHITECTURAL AND STRUCTURAL DRAWINGS)

PROPERTY LINE ———— _ _ ————

CENTER LINE ———— _ ————

FINISHED GRADE CONTOUR ———— 150.00 ————

EXISTING GRADE CONTOUR ———— (150.00) ————

EXISTING GRADE ELEVATION ———— (150.00)

FINISHED GRADE ELEVATION ———— 150.00

CHAIN LINK FENCE (CLF) ———— x —— x ————

FLOW LINE ———— . . . ————►

RIDGE LINE ———— R ————

GRADE BREAK ———— GB ————

GAS LINE ———— G ————

ELECTRICAL CONDUIT ———— E ————

TRAFFIC SIGNAL LINE ———— TS ————

STORM DRAIN LINE ———— SD ————

FIRE WATER LINE ———— FW ————

FRENCH DRAIN LINE ———— FD ————

IRRIGATION LINE ———— IRR ————

SEWER LINE ———— SS ————

DOMESTIC WATER LINE ———— DW ————

CONTROL POINT ———— △

STORM DRAIN MANHOLE ———— Ⓟ

SEWER MANHOLE ———— Ⓢ

STREET LIGHT ———— ☼

GAS VALVE ———— ⊗GV

PULL BOX ———— □PB

ELECTRICAL RISER ———— □

GUY WIRES ———— ←——

POWER POLE ———— ●

WATER METER ———— □ WM

WATER VALVE ———— ⊗ WV

FIRE HYDRANT ————

FIRE DEPARTMENT CONNECTION ———— FDC

POST INDICATOR VALVE ———— ⊗ PIV

BACKFLOW PREVENTER ————

UTILITY NOTES:

WATER UTILITY NOTES:

1. ALL FITTINGS SUBJECT TO AN UNBALANCED HYDROSTATIC FORCE SHALL BE RESTRAINED WITH 2000 PSI CONCRETE THRUST BLOCKS BEARING AGAINST UNDISTURBED SOIL. IN ADDITION, ALL FLEXIBLE JOINTS SHALL BE RESTRAINED WITH ANCHOR BOXES.
2. THE CONTRACTOR SHALL FURNISH, INSTALL AND TEST ALL PIPING FOR WATER INSIDE THE DEVELOPMENT, INCLUDING FIRE SERVICE AND HYDRANTS, AND THE DOMESTIC WATER SYSTEM. THE CONTRACTOR SHALL ALSO BE RESPONSIBLE FOR ALL THE WATER APPURTENANCES, VALVES WATER METERS (SUB-METERS), FITTINGS, THRUST BLOCKS OR RESTRAINT SYSTEM, AND FINAL CHLORINATION/ DISINFECTION OF THE WHOLE WATER DISTRIBUTION SYSTEM OF THE PROJECT IN ACCORDANCE WITH THE WATER DISTRIBUTION SPEC 02510 REQUIREMENTS.
3. PIPING SHALL BE "LISTED" FOR FIRE PROTECTION SERVICE AND COMPLY WITH AWWA STANDARDS, WHERE APPLICABLE. FITTINGS SHALL BE OF AN "APPROVED" TYPE.
4. ALL CONTROL VALVES SHALL BE "LISTED" INDICATING TYPE UNLESS A NON-INDICATING VALVE, SUCH AS AN UNDERGROUND GATE VALVE WITH APPROVED ROADWAY BOX COMPLETE WITH T-WRENCH, IS ACCEPTABLE TO THE AUTHORITY HAVING JURISDICTION (AHJ).
5. DOMESTIC WATER LINE PIPE SIZE 2-1/2" AND SMALLER USE COPPER TUBING, TYPE L HARD. PROVIDE PIPE CORROSION PROTECTION.
6. ALL TEES, PLUGS, CAPS, BENDS, AND HYDRANT BRANCHES ON PIPE INSTALLED UNDERGROUND SHALL BE RESTRAINED (PIPE CLAMPS AND TIE-RODS, THRUST BLOCKS, LOCKED MECHANICAL OR PUSH-ON JOINTS, MECHANICAL JOINTS UTILIZING SET SCREW RETAINER GLANDS, OR OTHER APPROVED METHODS) AGAINST MOVEMENT.

STORM DRAINAGE UTILITY NOTES:

1. ALL CATCH BASINS AND DRAINAGE INLETS SHALL BE STENCILED WITH "NO DUMPING, DRAINS TO OCEAN" LOGO. PER DETAIL 1 ON SHEET C5.02.
2. CONTRACTOR SHALL VERIFY ALL CONDITIONS AND DIMENSIONS AND SHALL REPORT ANY DISCREPANCIES TO THE CITY ENGINEER PRIOR TO THE COMMENCEMENT OF ANY WORK.
3. TRENCH EXCAVATION AND BACKFILLING SHALL BE IN ACCORDANCE WITH APPLICABLE STANDARDS. THE CONTRACTORS SHALL COMPLY WITH ALL APPLICABLE DIVISION OF INDUSTRIAL REGULATIONS (CAL-OSHA) SAFETY STANDARDS.
4. COORDINATE WITH PLUMBING PLAN TO VERFIY EXACT LOCATION OF POINT OF CONNECTION BETWEEN PLUMBING AND CIVIL. ADJUST LINE AS REQUIRED.
5. MINIMUM STORM DRAIN LINE PIPE SLOPE AT 0.50%.
6. DIRECT ROOF DOWNSPOUT TO PLANTER BOX OR CONNECT TO ONSITE STORM DRAINAGE LINE TOWARDS THE BIO-FILTRATION AREAS AS INDICATED ON UTILITY PLAN.

SEWER UTILITY NOTES:

1. CONTRACTOR TO COORDINATE WITH CITY OF LOS ANGELES FOR SADDLE CONNECTION TO STREET PER CITY OF LOS ANGELES STANDARD PLAN 27983.
2. CONTRACTOR TO FIELD VERIFY EXISTING SEWER LINE CONNECTION, CONDUCT CCTV TO VERIFY PIPE SIZE, INVERT ELEVATION, AND IDENTIFY IF THE EXISTING PIPE IS DAMAGED. IF DAMAGED EXISTING PIPE NEEDS TO BE REPLACED BASED ON THE FINDINGS NEW SEWER 6"ø LATERALS SHALL BE INSTALLED WITH A 1% MINIMUM SLOPE.
3. CONTRACTOR TO COORDINATE WITH THE OFF-SITE WORKS DURING INSTALLATION, ADJUST SEWER LINE CONNECTION AS REQUIRED.
4. CONTRACTOR TO VERIFY ALL CONDITIONS AND DIMENSIONS AND SHALL REPORT ANY DISCREPANCIES TO THE ENGINEER PRIOR TO THE COMMENCEMENT OF ANY WORK.
5. TRENCH EXCAVATION AND BACKFILLING SHALL BE IN ACCORDANCE WITH APPLICABLE STANDARD. THE CONTRACTORS SHALL COMPLY WITH ALL APPLICABLE DIVISION OF INDUSTRIAL REGULATIONS (CAL-OSHA) SAFETY STANDARDS.
6. FOR TOP OF RIM, CLEAN OUT COVER ELEVATION, AND MANHOLE COVER ELEVATION, COORDINATE UTILITY PLAN WITH GRADING PLANS; REPORT ANY DISCREPANCIES TO THE CITY ENGINEER PRIOR TO THE COMMENCEMENT OF ANY WORK.
7. TEST SHALL BE CONDUCTED IN ACCORDANCE WITH SECTION 306 – UNDERGROUND CONDUIT CONSTRUCTION OF THE STANDARD SPECIFICATIONS FOR PUBLIC WORKS CONSTRUCTION.
8. CONTRACTOR TO VERIFY POINT OF CONNECTION BETWEEN SEWER LATERAL AND BUILDING PLUMBING SEWER LAYOUT AND SHALL REPORT ANY DISCREPANCIES TO THE ENGINEER PRIOR TO THE COMMENCEMENT OF ANY WORK.

ABBREVIATIONS:

AC	ASPHALT CONCRETE
AD	AREA DRAIN
APWA	AMERICAN PUBLIC WORKS ASSOCIATION
ARCH	ARCHITECTURAL
ASPH	ASPHALT
BC	BEGINNING OF CURVE
BLDG	BUILDING
BM	BENCHMARK
BW	BACK OF SIDEWALK
BX	BOTTOM OF RAMP
BS	BOTTOM OF STEP
CAB	CRUSHED AGGREGATE BASE
CB	CATCH BASIN
CCTV	CLOSED CIRCUIT TELEVISION
CEFB	CITY ENGINEER FIELD BOOK
CF	CURB FACE
℄	CENTERLINE
CI	CAST IRON
CLF	CHAIN LINK FENCE
CLR	CLEAR
CMB	CRUSHED MISCELLANEOUS BASE
CO	CLEANOUT
CONC	CONCRETE
CPM	CONSTRUCTION PROJECT MANAGER
DIA	DIAMETER
DIP	DUCTILE IRON PIPE
DDSG	DRIVE DOUBLE-LEAF SWING GATE
DMH	DRAIN MAINTENANCE HOLE
DS	DRAIN
DW	DOMESTIC WATER
DWG(S)	DRAWING(S)
DWP	DEPARTMENT OF WATER AND POWER
DWY	DRIVEWAY
E	EAST
EC	END OF CURVE
EDS	EDISON
EG	EDGE OF GUTTER/EXISTING GRADE
ELEC	ELECTRICAL
EL, ELEV	ELEVATION
EJ	EXPANSION JOINT
EP	EDGE OF PAVEMENT
EXIST, EX	EXISTING
EXP	EXPANSION
FB	FIELD BOOK
FD	FRENCH DRAIN
FDC	FIRE DEPARTMENT CONNECTION
FF	FINISH FLOOR ELEVATION
FG	FINISH GRADE
FH	FIRE HYDRANT
FL	FLOW LINE
FND	FOUNDATION
FS	FINISH SURFACE
FT	FEET
FW	FIRE WATER
G	GAS
GB	GRADE BREAK
GM	GAS METER
GVLT	GAS VAULT
GV	GAS VALVE
HP	HIGH POINT
IE	INVERT ELEVATION
IIE	INLET INVERT ELEVATION
INV	INVERT
IRR	IRRIGATION
ITEM NO.	ITEM SHOWN ON PTR
L	LENGTH
MAX	MAXIMUM
MEAS	MEASURED
MH	MAINTENANCE HOLE, MANHOLE

ABBREVIATIONS:

N	NORTH
NPR	NEWSPAPER RACK
OC	ON CENTER
OIE	OUTLET INVERT ELEVATION
OAR	OWNERS AGENT REPRESENTITIVE
P	PROPORTIONED
PA	PLANTING AREA
PM	PUNCH MARK ON MANHOLE, PARKING METER
PCC	PORTLAND CONCRETE CEMENT
PIV	POST INDICATOR VALVE
PL	PROPERTY LINE
PP	POWER POLE
PTR	PRELIMINARY TITLE REPORT
PSG	PEDESTRIAN SWING GATE
PVC	POLYVINYL CHLORIDE PIPE
PVMT	PAVEMENT
R	RADIUS (GEOMETRY), RIDGE (GRADING), RECORD (SURVEY)
RCP	REINFORCED CONCRETE PIPE
REF	REFERENCE
RW	RIGHT OF WAY
S	SLOPE, SOUTH, SEWER
SD	STORM DRAIN
SDR	STANDARD PIPE DIMENSION RATIO
SSMH	SANITARY SEWER MANHOLE
SDMH	STORM DRAIN MANHOLE
SLPB	STREET LIGHT PULLBOX
SPK	SPIKE
SPKR	SPRINKLER
SS	SANITARY SEWER
STA	STATION, STD(S), STANDARD(S)
S&W	SPIKE & WASHER
SW	SIDEWALK
T	TANGENT
TA	TREE AREA
TAD	TOP OF AREA DRAIN
TC	TOP OF CONCRETE OR CURB
TCB	TOP OF CATCH BASIN
TCO	TOP OF CLEAN OUT
TE	TOP ELEVATION
TEL	TELEPHONE
TEL VLT	TELEPHONE VAULT
TG	TOP OF GRATE
TMH	TELEPHONE MANHOLE
TMS	TOP OF MOW STRIP
TOS	TOP OF SLOPE, TOP OF SLAB
TOE	TOP OF EMBANKMENT
TSPB	TRAFFIC SIGNAL PULLBOX
TS	TOP OF STEP
TW	TOP OF WALL
TX	TOP OF RAMP
TYP	TYPICAL
U/G	UNDERGROUND
VCP	VITRIFIED CLAY PIPE
VIF	VERIFY IN FIELD
V V	VAULT IN VENTS
W	DOMESTIC WATER, WEST
C	WATER METER
WV	WATER VALVE
WVLT	WATER VAULT
YB	YARD BOX

(W,S,G,E) (WATER, SEWER, GAS, ELECTRICAL)

BUREAU OF ENGINEERING OFFICIAL RECORD

THE CITY OF LOS ANGELES OR ITS OFFICERS OR AGENTS SHALL NOT BE RESPONSIBLE FOR THE ACCURACY OR COMPLETENESS OF ELECTRONIC COPIES OF THIS PLAN SHEET.

TTLB TEMPLATE REVISION DATE: 02/2013
SHEET ISSUE DATE: 01 January, 2000
FILE PATH:

REVISION DATES: (DESIGN STAGE ONLY)

DEPARTMENT OF PUBLIC WORKS
CITY OF LOS ANGELES

BUREAU OF ENGINEERING
CITY OF LOS ANGELES

NO.	REVISION DESCRIPTION	DATE	BY

BUILDING NO. -

INDEX NO. RP-300118

GARY LEE MOORE, PE, ENV SP
CITY ENGINEER

ARCHITECTURAL DIVISION

		DATE:
ARCHITECT/ENGINEER:	VIRGILIO AOANAN LIC. NO.: C36079	03/03/2020
DESIGNED BY:	VIRGILIO AOANAN	03/03/2020
DRAWN BY:	AUTUMN WAGGONER	03/03/2020
CHECKED BY:	VIRGILIO AOANAN	03/03/2020
APPROVED BY:	VIRGILIO AOANAN	03/03/2020

REGISTERED PROFESSIONAL ENGINEER VIRGILIO C. AOANAN No. C36079 Exp. 6/30/20 CIVIL STATE OF CALIFORNIA

VERTICAL CONTROL:
HORIZONTAL CONTROL:

SHEET TITLE: GENERAL NOTES, LEGEND, AND ABBREVIATIONS

PROJECT: GRANADA HILLS POOL AND BATHHOUSE REPLACEMENT PROJECT

ADDRESS: 16730 CHATSWORTH STREET GRANADA HILLS, CA 91344

MCA ENGINEERS, INC.
Visit S. Central Avenue, Suite 250, Alhambra, CA 91801
Tel: 626.570.5588 Fax: 626.570.5590

BID SET
PROJECT ISSUE DATE: 06/22/21

WORK ORDER NO. #E170517

PLAN FILE NO. #308

DRAWING NO. C101

SHEET 2 OF SHEETS 19

PLOTTED:09/18/2019 1:00:00 PM

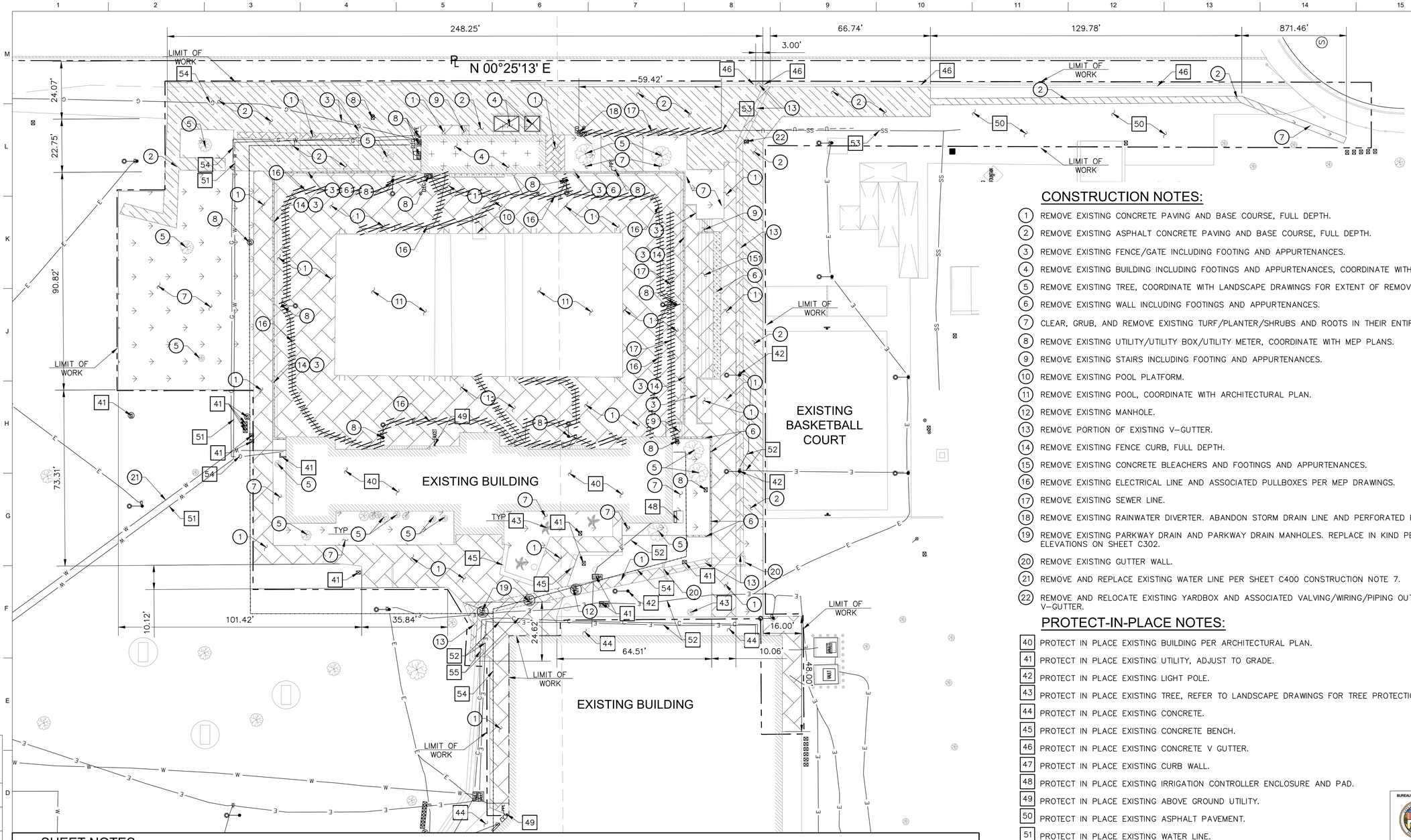

CONSTRUCTION NOTES:

1. REMOVE EXISTING CONCRETE PAVING AND BASE COURSE, FULL DEPTH.
2. REMOVE EXISTING ASPHALT CONCRETE PAVING AND BASE COURSE, FULL DEPTH.
3. REMOVE EXISTING FENCE/GATE INCLUDING FOOTING AND APPURTENANCES.
4. REMOVE EXISTING BUILDING INCLUDING FOOTINGS AND APPURTENANCES, COORDINATE WITH ARCHITECTURAL PLAN.
5. REMOVE EXISTING TREE, COORDINATE WITH LANDSCAPE DRAWINGS FOR EXTENT OF REMOVAL.
6. REMOVE EXISTING WALL INCLUDING FOOTINGS AND APPURTENANCES.
7. CLEAR, GRUB, AND REMOVE EXISTING TURF/PLANTER/SHRUBS AND ROOTS IN THEIR ENTIRETY.
8. REMOVE EXISTING UTILITY/UTILITY BOX/UTILITY METER, COORDINATE WITH MEP PLANS.
9. REMOVE EXISTING STAIRS INCLUDING FOOTING AND APPURTENANCES.
10. REMOVE EXISTING POOL PLATFORM.
11. REMOVE EXISTING POOL, COORDINATE WITH ARCHITECTURAL PLAN.
12. REMOVE EXISTING MANHOLE.
13. REMOVE PORTION OF EXISTING V–GUTTER.
14. REMOVE EXISTING FENCE CURB, FULL DEPTH.
15. REMOVE EXISTING CONCRETE BLEACHERS AND FOOTINGS AND APPURTENANCES.
16. REMOVE EXISTING ELECTRICAL LINE AND ASSOCIATED PULLBOXES PER MEP DRAWINGS.
17. REMOVE EXISTING SEWER LINE.
18. REMOVE EXISTING RAINWATER DIVERTER. ABANDON STORM DRAIN LINE AND PERFORATED PIPE IN PLACE.
19. REMOVE EXISTING PARKWAY DRAIN AND PARKWAY DRAIN MANHOLES. REPLACE IN KIND PER NEW PAVEMENT ELEVATIONS ON SHEET C302.
20. REMOVE EXISTING GUTTER WALL.
21. REMOVE AND REPLACE EXISTING WATER LINE PER SHEET C400 CONSTRUCTION NOTE 7.
22. REMOVE AND RELOCATE EXISTING YARDBOX AND ASSOCIATED VALVING/WIRING/PIPING OUTSIDE OF NEW V–GUTTER.

PROTECT-IN-PLACE NOTES:

40. PROTECT IN PLACE EXISTING BUILDING PER ARCHITECTURAL PLAN.
41. PROTECT IN PLACE EXISTING UTILITY, ADJUST TO GRADE.
42. PROTECT IN PLACE EXISTING LIGHT POLE.
43. PROTECT IN PLACE EXISTING TREE, REFER TO LANDSCAPE DRAWINGS FOR TREE PROTECTION REQUIREMENTS.
44. PROTECT IN PLACE EXISTING CONCRETE.
45. PROTECT IN PLACE EXISTING CONCRETE BENCH.
46. PROTECT IN PLACE EXISTING CONCRETE V GUTTER.
47. PROTECT IN PLACE EXISTING CURB WALL.
48. PROTECT IN PLACE EXISTING IRRIGATION CONTROLLER ENCLOSURE AND PAD.
49. PROTECT IN PLACE EXISTING ABOVE GROUND UTILITY.
50. PROTECT IN PLACE EXISTING ASPHALT PAVEMENT.
51. PROTECT IN PLACE EXISTING WATER LINE.
52. PROTECT IN PLACE EXISTING ELECTRICAL LINE.
53. PROTECT IN PLACE EXISTING SEWER LINE.
54. PROTECT IN PLACE EXISTING GAS LINE.
55. PROTECT IN PLACE EXISTING COMMUNICATION LINE.

LEGEND:

- REMOVE EXISTING CONCRETE PAVING
- REMOVE EXISTING ASPHALT PAVING
- REMOVE EXISTING STRUCTURE
- CLEAR, GRUB, AND REMOVE EXISTING TURF/PLANTER/SHRUBS AND ROOTS IN THEIR ENTIRETY.
- UTILITY LINE REMOVAL
- EXISTING CONCRETE

SHEET NOTES:

1. ALL EXISTING STREET IMPROVEMENTS, UNLESS OTHERWISE INDICATED HEREIN TO BE REMOVED, SHALL BE PROTECTED IN PLACE. THESE ITEMS INCLUDE SIDEWALK, DRIVEWAYS, CURB AND GUTTER, LIGHT POLES, POWER POLES, SIGNAL POLES AND APPURTENANCES.
2. CONTRACTOR SHALL NOTIFY ALL UTILITY OWNERS BOTH IN PRIVATE PROPERTY AND IN PUBLIC RIGHT OF WAY FOR EXISTING LATERALS TO BE REMOVED OR CAPPED.
3. VERIFY IN FIELD AND POTHOLE TO REMOVE ALL EXISTING ON–SITE SEWER LINES, CLEANOUTS, MANHOLES, UNLESS OTHERWISE INDICATED. CUT PIPE AND CAP PIPE ENDS. COORDINATE WITH PLUMBING DRAWINGS. IN CASE OF CONFLICT, PLUMBING WILL GOVERN.
4. VERIFY IN FIELD AND POTHOLE TO REMOVE EXISTING ON–SITE WATER LINES, UNLESS OTHERWISE INDICATED. TURN OFF WATER AT SOURCE, CUT AND CAP PIPE AT LIMIT OF WORK LINE. REMOVE WATER LINE WITHIN WORK LIMITS. COORDINATE WITH PLUMBING DRAWINGS. IN CASE OF CONFLICT, PLUMBING WILL GOVERN.
5. VERIFY IN FIELD AND POTHOLE TO REMOVE EXISTING ON–SITE STORM DRAIN LINES, CLEANOUTS, MANHOLES, UNLESS OTHERWISE INDICATED. CUT PIPE AND CAP PIPE ENDS. COORDINATE WITH PLUMBING. IN CASE OF CONFLICT, PLUMBING WILL GOVERN.
6. ABANDON IN PLACE UNNEEDED EXISTING ON–SITE IRRIGATION LINES. COORDINATE WITH LANDSCAPE DRAWINGS. IN CASE OF CONFLICT, LANDSCAPE WILL GOVERN.
7. VERIFY IN FIELD AND POTHOLE TO REMOVE ALL EXISTING ELECTRICAL, POWER, TELEPHONE, AND COMMUNICATIONS SYSTEMS ON SITE, UNLESS OTHERWISE INDICATED ON ELECTRICAL DRAWINGS. COORDINATE WITH UTILITY OWNERS FOR REQUIREMENTS.
8. VERIFY IN FIELD AND POTHOLE TO REMOVE ALL EXISTING ON–SITE GAS SYSTEM, UNLESS OTHERWISE INDICATED ON PLUMBING/MECHANICAL DRAWINGS. COORDINATE WITH GAS COMPANY FOR REQUIREMENTS.
9. COORDINATE WITH LANDSCAPING FOR TREE REMOVAL. IN CASE OF CONFLICT, LANDSCAPE WILL GOVERN.
10. CONTRACTOR SHOULD VISUALLY VERIFY IN FIELD ALL EXISTING FEATURE TO BE REMOVED WITHIN LIMIT OF WORK BEFORE BIDDING. ALL SURFACE AND UNDERGROUND FEATURES WITH LIMIT OF WORK ARE A PART OF DEMOLITION PLAN UNLESS OTHERWISE INDICATED TO PROTECT.
11. REMOVE EXISTING ABANDONED UTILITIES FOUND WITHIN THE EXCAVATION FOR THE POOL AND POOL DECK.

DEMOLITION PLAN

20 10 0 20 40

SCALE: 1" = 20'

BUREAU OF ENGINEERING — OFFICIAL RECORD

THE CITY OF LOS ANGELES OR ITS OFFICERS OR AGENTS SHALL NOT BE RESPONSIBLE FOR THE ACCURACY OR COMPLETENESS OF ELECTRONIC COPIES OF THIS PLAN SHEET.

TTLB TEMPLATE REVISION DATE: 02/2013
SHEET ISSUE DATE: 01 January, 2000
FILE PATH:

REVISION DATES: (DESIGN STAGE ONLY)

DEPARTMENT OF PUBLIC WORKS
BUREAU OF ENGINEERING
CITY OF LOS ANGELES
ENGINEERING

NO.	REVISION DESCRIPTION	DATE	BY

BUILDING NO. -
INDEX NO. RP-300118

REGISTERED PROFESSIONAL ENGINEER — VIRGILIO C. AOANAN — No. C36079 — Exp. 6/30/20 — CIVIL — STATE OF CALIFORNIA

GARY LEE MOORE, PE, ENV SP — CITY ENGINEER — DATE: 03/03/2020

ARCHITECTURAL DIVISION

ARCHITECT/ENGINEER:	VIRGILIO AOANAN LIC. NO.: C36079
DESIGNED BY:	VIRGILIO AOANAN
DRAWN BY:	AUTUMN WAGGONER
CHECKED BY:	VIRGILIO AOANAN
APPROVED BY:	VIRGILIO AOANAN

CITY OF LOS ANGELES

VERTICAL CONTROL:
HORIZONTAL CONTROL:

SHEET TITLE: DEMOLITION PLAN

PROJECT: GRANADA HILLS POOL AND BATHHOUSE REPLACEMENT PROJECT

ADDRESS: 16730 CHATSWORTH STREET GRANADA HILLS, CA 91344

MCA ENGINEERS, INC. — 1541 S. Grand Avenue, Suite 210, Alhambra, CA 91801 — Tel: (626) 289-0100 — Fax: (626) 289-0200

BID SET
PROJECT ISSUE DATE: 06/22/21

WORK ORDER NO. #E170517
PLAN FILE NO. #308
DRAWING NO. CD101
SHEET 3 OF SHEETS 18

PLOTTED: 09/18/2019 1:00:00 PM

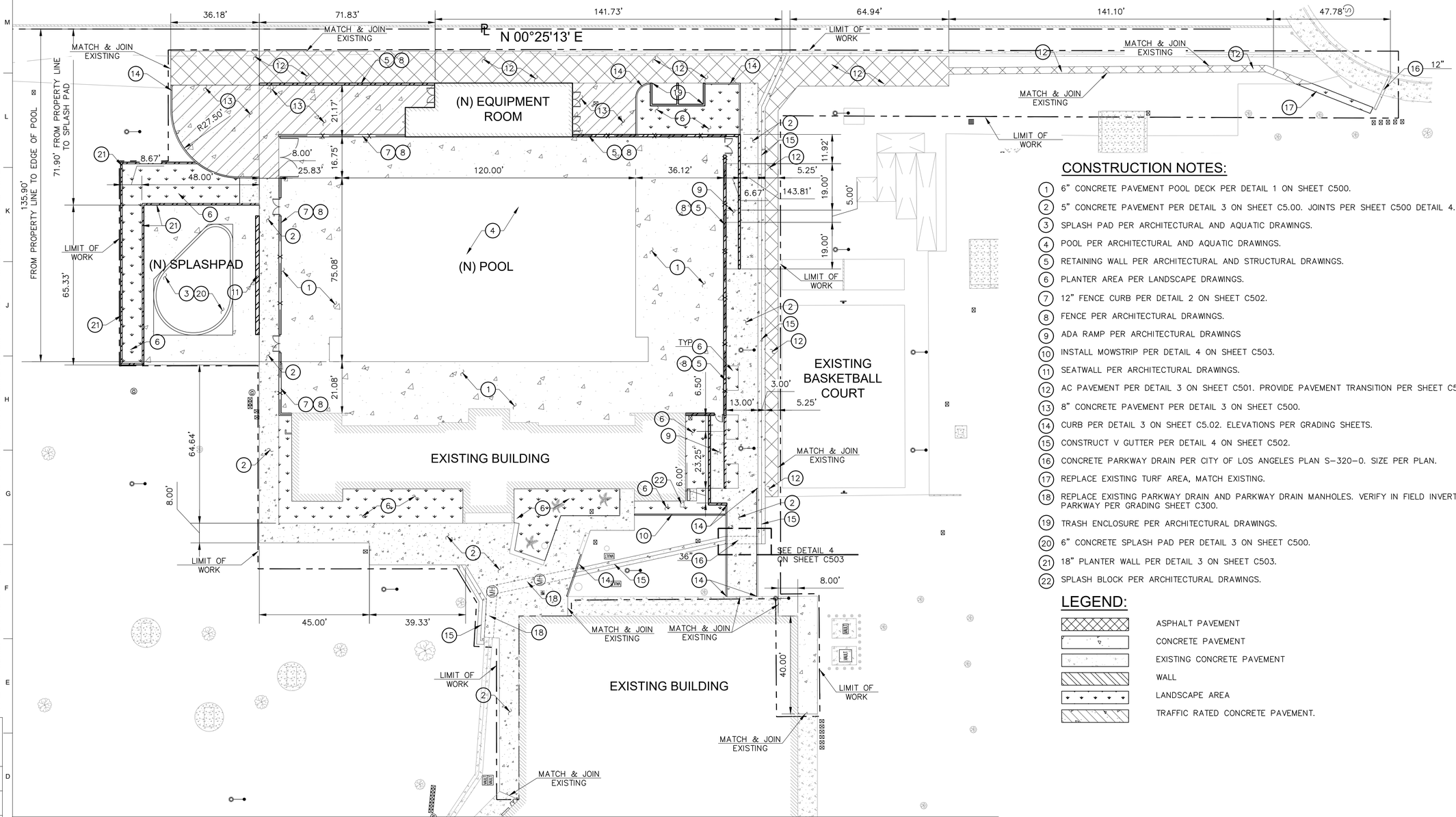

CONSTRUCTION NOTES:

1. 6" CONCRETE PAVEMENT POOL DECK PER DETAIL 1 ON SHEET C500.
2. 5" CONCRETE PAVEMENT PER DETAIL 3 ON SHEET C5.00. JOINTS PER SHEET C500 DETAIL 4.
3. SPLASH PAD PER ARCHITECTURAL AND AQUATIC DRAWINGS.
4. POOL PER ARCHITECTURAL AND AQUATIC DRAWINGS.
5. RETAINING WALL PER ARCHITECTURAL AND STRUCTURAL DRAWINGS.
6. PLANTER AREA PER LANDSCAPE DRAWINGS.
7. 12" FENCE CURB PER DETAIL 2 ON SHEET C502.
8. FENCE PER ARCHITECTURAL DRAWINGS.
9. ADA RAMP PER ARCHITECTURAL DRAWINGS
10. INSTALL MOWSTRIP PER DETAIL 4 ON SHEET C503.
11. SEATWALL PER ARCHITECTURAL DRAWINGS.
12. AC PAVEMENT PER DETAIL 3 ON SHEET C501. PROVIDE PAVEMENT TRANSITION PER SHEET C500 DETAIL 4.
13. 8" CONCRETE PAVEMENT PER DETAIL 3 ON SHEET C500.
14. CURB PER DETAIL 3 ON SHEET C5.02. ELEVATIONS PER GRADING SHEETS.
15. CONSTRUCT V GUTTER PER DETAIL 4 ON SHEET C502.
16. CONCRETE PARKWAY DRAIN PER CITY OF LOS ANGELES PLAN S-320-0. SIZE PER PLAN.
17. REPLACE EXISTING TURF AREA, MATCH EXISTING.
18. REPLACE EXISTING PARKWAY DRAIN AND PARKWAY DRAIN MANHOLES. VERIFY IN FIELD INVERT. TOP OF PARKWAY PER GRADING SHEET C300.
19. TRASH ENCLOSURE PER ARCHITECTURAL DRAWINGS.
20. 6" CONCRETE SPLASH PAD PER DETAIL 3 ON SHEET C500.
21. 18" PLANTER WALL PER DETAIL 3 ON SHEET C503.
22. SPLASH BLOCK PER ARCHITECTURAL DRAWINGS.

LEGEND:

- ASPHALT PAVEMENT
- CONCRETE PAVEMENT
- EXISTING CONCRETE PAVEMENT
- WALL
- LANDSCAPE AREA
- TRAFFIC RATED CONCRETE PAVEMENT.

SHEET NOTES:

1. FOR GENERAL NOTES, LEGEND AND ABBREVIATIONS, SEE SHEETS C1.00 & C1.01.
2. SEE ARCHITECTURAL AND LANDSCAPE DRAWINGS FOR OTHER SITE RELATED DIMENSIONS NOT SHOWN ON THIS DRAWING.
3. FOR PAVEMENT MARKINGS AND STRIPING, RAMP WITH HANDRAILS, PLANTER AREA, TRASH ENCLOSURE AND TRANSFORMER ENCLOSURE, SEE ARCHITECTURAL DRAWINGS. FOR GAS, SEWER, ROOF DRAINS, FIRE & DOMESTIC WATER LINES POINTS OF CONNECTION AT BUILDING, SEE MECHANICAL AND PLUMBING DRAWINGS OF THE BUILDING. FOR TRANSFORMER ENCLOSURE AND CONCRETE PAD, SEE ELECTRICAL DRAWINGS.
4. PROVIDE EXPANSION JOINTS WHERE NEW CONCRETE WALK/PAVEMENT ABUTS ANOTHER RIGID STRUCTURE PER DETAIL 5 ON C5.00.
5. GRAY LINES, SYMBOLS, FEATURES INDICATED ON PLAN ARE TO REMAIN OR PROTECT IN PLACE.

SURVEY NOTES:

1. BASIS OF BEARINGS:

   THE HORIZONTAL BASIS OF BEARING IS THE CENTERLINE OF CHATSWORTH AVENUE BEING N 89°34'52" W, AS SHOWN ON TRACT NO. 30883, M.B. 798, PAGES 33-34, RECORDED IN THE OFFICE OF THE COUNTY RECORDER OF THE LOS ANGELES COUNTY.
   THE VERTICAL BASIS OF BEARING IS A LOS ANGELES CITY BENCHMARK, 04-03302.

2. BENCHMARKS:

   BM ID NO. 04-03302
   ELEVATION: 934.605 FEET
   YEAR:1974
   NAVD 1988-2002
   4FT S OF S CURB LINE CHATSWORTH ST; 37.5FT W OF BC CURB RETURN W OF HAYVENHURST AVE; SW COR OF CB

SURVEY SOURCE

FLORENTINO FERRER & ASSOCIATES
LAND SURVEYORS & ENGINEERS
2268 CECIANA DRIVE
HACIENDA HEIGHTS, CA 91745
PHONE: (626)333-9644
FAX: (626)629-7900

SITE CONTROL PLAN

20 10 0 20 40
SCALE: 1" = 20'

BUREAU OF ENGINEERING
OFFICIAL RECORD

DCA ENGINEERS, INC.
CIVIL ENGINEERS
1841 S. Garfield Avenue, 3rd Flr. Alhambra, CA 91801
Tel: 626.282.4191 Fax: 626.282.4197

CITY OF LOS ANGELES
DEPARTMENT OF PUBLIC WORKS
BUREAU OF ENGINEERING

ENGINEERING
CITY OF LOS ANGELES

NO.	REVISION DESCRIPTION	DATE	BY

BUILDING NO. -
INDEX NO. RP-300118

REGISTERED PROFESSIONAL ENGINEER
VIRGILIO C. AOANAN
No. C36079
Exp. 6/30/20
CIVIL
STATE OF CALIFORNIA

GARY LEE MOORE, PE, ENV SP
CITY ENGINEER

ARCHITECTURAL DIVISION

		DATE:
ARCHITECT/ENGINEER:	VIRGILIO AOANAN LIC. NO.: C36079	03/03/2020
DESIGNED BY:	VIRGILIO AOANAN	03/03/2020
DRAWN BY:	AUTUMN WAGGONER	03/03/2020
CHECKED BY:	VIRGILIO AOANAN	03/03/2020
APPROVED BY:	VIRGILIO AOANAN	03/03/2020

VERTICAL CONTROL:
HORIZONTAL CONTROL:

SHEET TITLE: SITE CONTROL PLAN
PROJECT: GRANADA HILLS POOL AND BATHHOUSE REPLACEMENT PROJECT
ADDRESS: 16730 CHATSWORTH STREET GRANADA HILLS, CA 91344

BID SET
PROJECT ISSUE DATE: 06/22/21

WORK ORDER NO. #E170517
PLAN FILE NO. #308
DRAWING NO. C200
SHEET 4 OF SHEETS 19

PLOTTED:09/18/2019 1:00:00 PM

THE CITY OF LOS ANGELES OR ITS OFFICERS OR AGENTS SHALL NOT BE RESPONSIBLE FOR THE ACCURACY OR COMPLETENESS OF ELECTRONIC COPIES OF THIS PLAN SHEET.

TTLB TEMPLATE REVISION DATE: 02/2013
SHEET ISSUE DATE: 01 January, 2000
FILE PATH:
REVISION DATES (DESIGN STAGE ONLY)

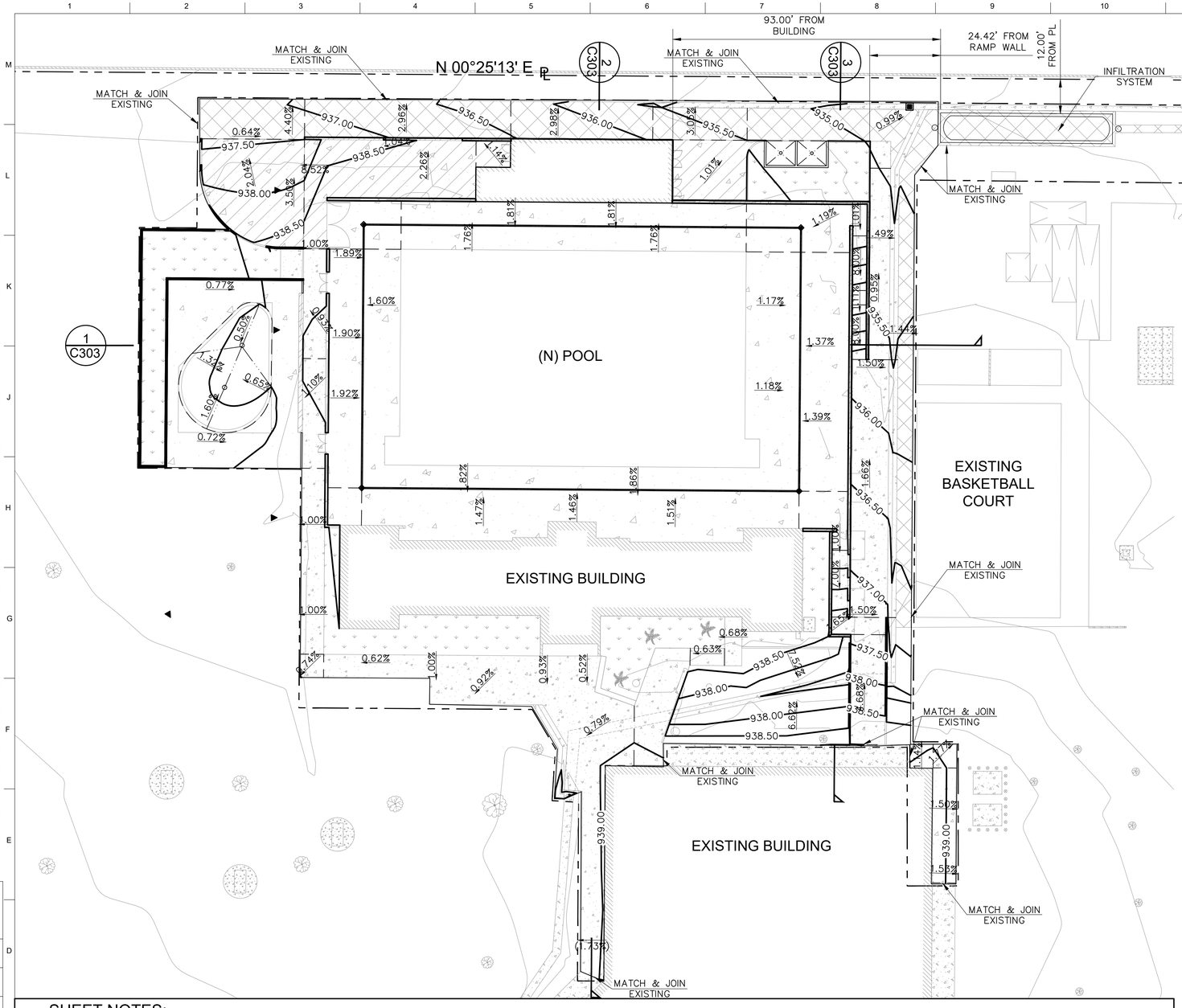

SHEET NOTES:

1. FOR GENERAL NOTES, LEGEND AND ABBREVIATIONS, SEE SHEETS C1.00 AND C1.01.
2. SEE ARCHITECTURAL AND LANDSCAPE DRAWINGS FOR OTHER SITE RELATIVE DIMENSIONS NOT SHOWN ON THIS DRAWING.
3. FOR FINAL GRADING PLAN NOTES, SEE THIS SHEET.
4. FOR ELEVATION SHOWN ON THIS PLAN SUCH AS TOP OF GRATE, CLEAN OUT, MANHOLE COVER, TOP OF DRAINAGE GRATES, TOP OF RIM CONTRACTOR TO COORDINATE ELEVATION SHOWN ON UTILITY PLANS. REPORT/NOTIFY ENGINEER FOR ANY CONFLICT/DISCREPANCY IN ELEVATION PRIOR TO COMMENCEMENT OF WORK.
5. CONTRACTOR SHALL VERIFY ALL CONDITIONS AND DIMENSIONS AND SHALL REPORT ANY DISCREPANCIES TO THE CPM OR IOR PRIOR TO THE COMMENCEMENT OF ANY WORK.
6. CONTRACTOR SHALL VERIFY JOINING OF NEW IMPROVEMENT TO ADJACENT FEATURES, EXISTING/ MATCH TO EXISTING FEATURES WITH SURVEY INFORMATION, CURRENT SITE CONDITION AND WITH THE DESIGN GRADE & ELEVATIONS AND SHALL REPORT ANY DISCREPANCIES TO THE CPM OR IOR PRIOR TO THE COMMENCEMENT OF WORK.

FINAL GRADING NOTES

1. ALL GRADING SHALL BE PERFORMED UNDER THE SUPERVISION OF THE CITY INSPECTOR AND/OR GEOTECHNICAL ENGINEER.
2. FOR EXCAVATION, FILL, BACKFILL, AND COMPACTION, THE CONTRACTOR SHALL FOLLOW THE RECOMMENDATIONS AS INDICATED WITHIN THE GEOTECHNICAL REPORT.
3. NO GRADING WORK SHALL BE PERFORMED AT ANY TIME WITHOUT AN EROSION CONTROL SYSTEM APPROVED BY THE DISTRICT ENGINEER AND JURISDICTIONAL AGENCY. ANY GRADING WORK SHALL BE PERFORMED WITH AN EROSION CONTROL SYSTEM APPROVED BY THE DISTRICT ENGINEER AND THE JURISDICTIONAL AGENCIES. EROSION CONTROL PLAN SHALL BE PROVIDED BY THE CONTRACTOR.
4. CONTRACTOR SHALL PROVIDE A STORM WATER POLLUTION PREVENTION PLAN (SWPPP) AND EROSION AND SEDIMENTATION CONTROL FOR REVIEW AND APPROVAL BY THE JURISDICTIONAL AGENCIES. USE RECOMMENDATIONS BY THE BEST MANAGEMENT PRACTICES (BMP'S) TO IMPLEMENT CONTROL. USE MINIMUM OF TWO STACKED SANDBAGS AROUND THE PERIPHERY OF THE WORK LIMITS TO AUGMENT THE SYSTEM REQUIRED BY THE AGENCIES HAVING JURISDICTION OVER THE PROJECT.
5. CONSTRUCT DESIGN GRADES SHOWN ON PLAN. CONSTRUCT STRAIGHT GRADES BETWEEN INDICATED ELEVATIONS UNLESS INTERRUPTED BY A GRADE CHANGE LINE.
6. THE CONTRACTOR SHALL NOT BEGIN THE PAVING OPERATION UNTIL THE SUBGRADE HAS BEEN APPROVED BY THE GRADING INSPECTOR AND SOIL ENGINEER.
7. THE CONTRACTOR IS ADVISED THAT THE APPROVAL OF THIS PLAN DOES NOT WAIVE THE REQUIREMENTS FOR EXCAVATIONS CONTAINED IN THE STATE CONSTRUCTION SAFETY ORDERS ENFORCED BY THE STATE DIVISION OF INDUSTRIAL SAFETY.
8. NO FILL TO BE PLACED, UNTIL THE GEOTECHNICAL ENGINEER AND INSPECTOR HAVE INSPECTED AND APPROVED THE BOTTOM OF EXCAVATION.
9. ALL FILL OR BACK FILL SHALL BE COMPACTED IN 6" TO 8" LOOSE LAYERS BY MECHANICAL MEANS TO A MINIMUM 90% RELATIVE COMPACTION AS DETERMINED BY THE ASTM D-1557. THE TOP 12" OF FILL OR BACKFILL SHALL BE COMPACTED TO A MINIMUM 95% RELATIVE COMPACTION.
10. ALL IMPORTED FILL SHALL BE APPROVED AT THE SOURCE PRIOR TO DELIVERY TO THE SITE.
11. SEE ARCHITECTURAL PLAN FOR TOP OF WALL ELEVATION AND SECTION.

ESTIMATED EARTHWORK QUANTITY

ESTIMATED CUT	=	1200 CY
ESTIMATED FILL	=	50 CY
NET EXPORT	=	1150 CY
POOL OVEREXCAVATION& RECOMPACTION	=	375 CY

NOTES

1. THE ESTIMATED QUANTITIES PROVIDED ABOVE ARE FOR REFERENCE ONLY TO BE USED FOR JURISDICTIONAL PLAN CHECKING AND PERMITTING PURPOSES ONLY.
2. ESTIMATED EARTHWORK ABOVE IS BASED ON DESIGN FINISH GRADES TO EXISTING GRADES IN SURVEY. THE ESTIMATED EARTHWORK DOES NOT CONSIDER THE THICKNESS OF EACH PAVEMENT MATERIAL, FOUNDATION AND SLAB ON GRADE VOLUMES, THE REMOVAL OF ANY UNSUITABLE MATERIAL, AND THE REMOVAL OF EXISTING BASEMENTS, PITS, VAULTS, TOP SOIL OR VEGETATION.
3. THE ESTIMATED EARTHWORK QUANTITIES DO NOT INCLUDE SHRINKAGE FACTORS DUE TO COMPACTION OR ANY OVER EXCAVATION QUANTITIES.
4. THE CONTRACTOR SHALL CALCULATE HIS OWN EARTHWORK QUANTITIES NECESSARY FOR HIS BID AND WORK. VCA IS NOT RESPONSIBLE AND LIABLE FOR THE CONTRACTOR'S EARTHWORK CALCULATIONS.
5. ESTIMATED EARTHWORK QUANTITIES ABOVE ASSUME THAT ALL ON-SITE MATERIALS ARE SUITABLE FOR BACKFILLING. HOWEVER, ACTUAL EXISTING ON-SITE MATERIALS AND IMPORTED MATERIALS MUST FIRST BE APPROVED BY THE GEOTECHNICAL ENGINEER PRIOR TO INSTALLATION, REMOVAL, OR REPLACEMENT.
6. THE ESTIMATED QUANTITIES WERE CALCULATED AND LIMITED ON ON-SITE AREA ONLY.

GRADING LEGEND

FINISHED GRADE CONTOUR ---------- 150.00

EXISTING GRADE CONTOUR ---------- (150.00)

EXISTING GRADE ELEVATION ---------- (150.00)

FINISHED GRADE ELEVATION ---------- 150.00

BUREAU OF ENGINEERING
OFFICIAL RECORD

STORMWATER MITIGATION
LOW IMAPCT DEVELOPMENT (LID)
APPROVED WITH CONDITIONS

This set of plans and specifications must be at the jobsite during construction

Stormwater Observation Report (SOR) is required prior to issuance of Certificate of Occupancy or final sign off.

Total Pages _____

Restamped `

Digitally Signed By: A. Eltawil Date: 08/06/2020
Department of Public Works - Bureau of Sanitation
Watershed Protection Division

GRADING PLAN

20 10 0 20 40
SCALE: 1" = 20'

VCA ENGINEERS, INC.
Civil & Structural Engineers
1241 S. Soto Street, Suite 250, Los Angeles, CA 90023
Tel: 323.980.7575 Fax: 323.980.7576

BID SET
PROJECT ISSUE DATE: 06/22/21

CITY OF LOS ANGELES
DEPARTMENT OF PUBLIC WORKS
BUREAU OF ENGINEERING

ENGINEERING
CITY OF LOS ANGELES

NO.	REVISION DESCRIPTION	DATE	BY

BUILDING NO. -
INDEX NO. RP-300118

REGISTERED PROFESSIONAL ENGINEER
VIRGILIO C. AOANAN
No. C36079
Exp. 6/30/20
CIVIL
STATE OF CALIFORNIA

CITY ENGINEER	GARY LEE MOORE, PE, ENV SP
DATE:	03/03/2020
	ARCHITECTURAL DIVISION
ARCHITECT/ENGINEER:	VIRGILIO AOANAN LIC. NO.: C36079
DESIGNED BY:	VIRGILIO AOANAN
DRAWN BY:	AUTUMN WAGGONER
CHECKED BY:	VIRGILIO AOANAN
APPROVED BY:	VIRGILIO AOANAN

VERTICAL CONTROL:
HORIZONTAL CONTROL:
SHEET TITLE: GRADING PLAN
PROJECT: GRANADA HILLS POOL AND BATHHOUSE REPLACEMENT PROJECT
ADDRESS: 16730 CHATSWORTH STREET GRANADA HILLS, CA 91344

WORK ORDER NO. #E170517
PLAN FILE NO. #308
DRAWING NO. C300
SHEET 5 OF SHEETS 19

PLOTTED:09/18/2019 1:00:00 PM

THE CITY OF LOS ANGELES OR ITS OFFICERS OR AGENTS SHALL NOT BE RESPONSIBLE FOR THE ACCURACY OR COMPLETENESS OF ELECTRONIC COPIES OF THIS PLAN SHEET.

TTLB TEMPLATE REVISION DATE: 02/2013
SHEET ISSUE DATE: 01 January, 2000
FILE PATH:

REVISION DATES (DESIGN STAGE ONLY)

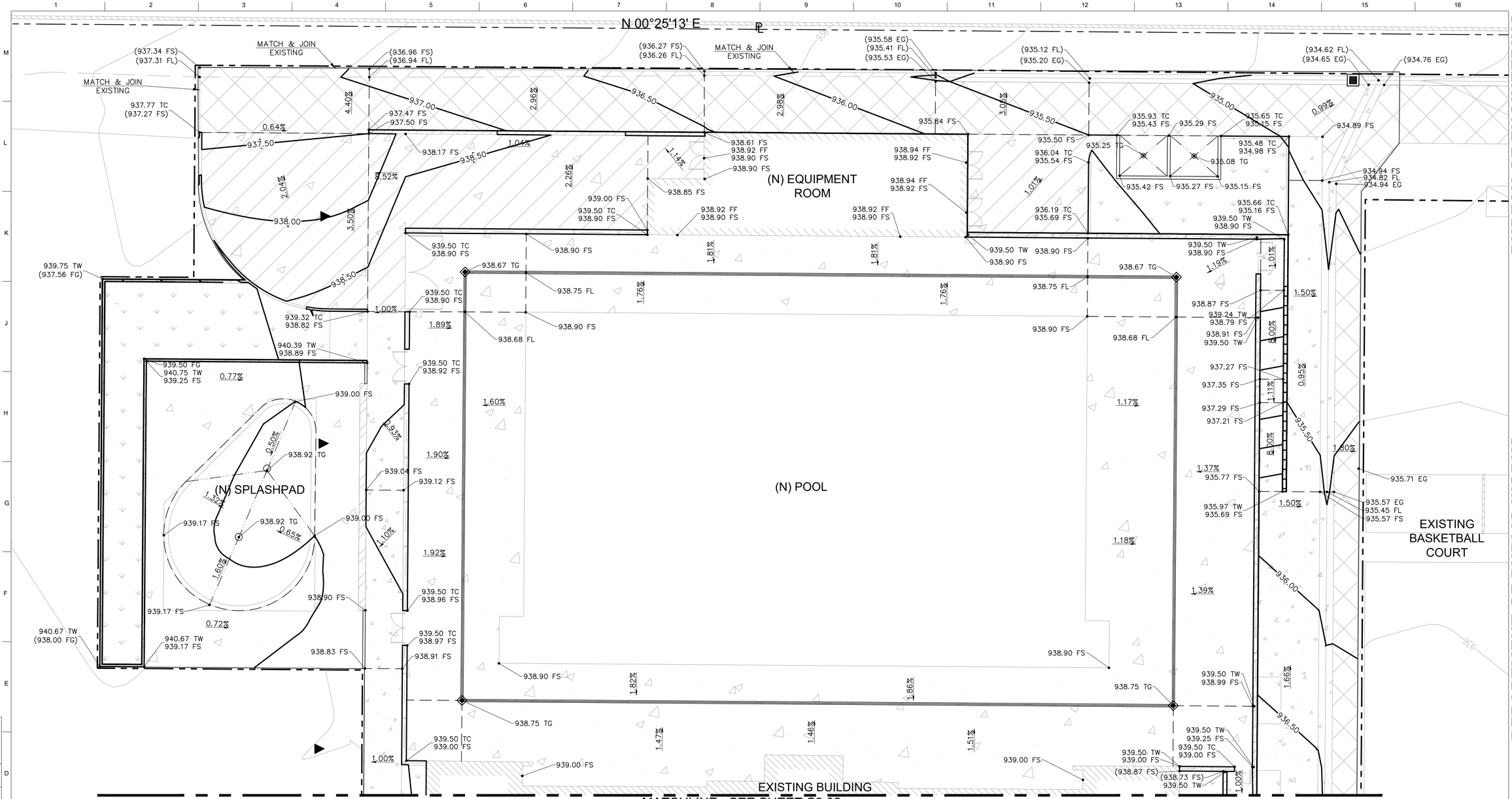

SHEET NOTES:

1. FOR GENERAL NOTES, LEGEND AND ABBREVIATIONS, SEE SHEETS C1.00 AND C1.01.
2. SEE ARCHITECTURAL AND LANDSCAPE DRAWINGS FOR OTHER SITE RELATIVE DIMENSIONS NOT SHOWN ON THIS DRAWING.
3. FOR FINAL GRADING PLAN NOTES, SEE THIS SHEET.
4. FOR ELEVATION SHOWN ON THIS PLAN SUCH AS TOP OF GRATE, CLEAN OUT, MANHOLE COVER, TOP OF DRAINAGE GRATES, TOP OF RIM CONTRACTOR TO COORDINATE ELEVATION SHOWN ON UTILITY PLANS. REPORT/NOTIFY ENGINEER FOR ANY CONFLICT/DISCREPANCY IN ELEVATION PRIOR TO COMMENCEMENT OF WORK.
5. CONTRACTOR SHALL VERIFY ALL CONDITIONS AND DIMENSIONS AND SHALL REPORT ANY DISCREPANCIES TO THE CPM OR IOR PRIOR TO THE COMMENCEMENT OF ANY WORK.
6. CONTRACTOR SHALL VERIFY JOINING OF NEW IMPROVEMENT TO ADJACENT FEATURES, EXISTING/ MATCH TO EXISTING FEATURES WITH SURVEY INFORMATION, CURRENT SITE CONDITION AND WITH THE DESIGN GRADE & ELEVATIONS AND SHALL REPORT ANY DISCREPANCIES TO THE CPM OR IOR PRIOR TO THE COMMENCEMENT OF WORK.

ENLARGED GRADING PLAN

10 5 0 10 20

SCALE: 1" = 10'

BUREAU OF ENGINEERING
OFFICIAL RECORD

THE CITY OF LOS ANGELES OR ITS OFFICERS OR AGENTS SHALL NOT BE RESPONSIBLE FOR THE ACCURACY OR COMPLETENESS OF ELECTRONIC COPIES OF THIS PLAN SHEET.

TTLB TEMPLATE REVISION DATE: 02/2013
SHEET ISSUE DATE: 01 January, 2000 FILE PATH:

REVISION DATES: (DESIGN STAGE ONLY)

BUREAU OF ENGINEERING
CITY OF LOS ANGELES
ENGINEERING

NO.	REVISION DESCRIPTION	DATE	BY

BUILDING NO. -
INDEX NO. RP-300118

REGISTERED PROFESSIONAL ENGINEER
VIRGILIO C. AGANAN
No. C36079
Exp. 6/30/20
CIVIL
STATE OF CALIFORNIA

DEPARTMENT OF PUBLIC WORKS
CITY OF LOS ANGELES

GARY LEE MOORE, PE, ENV SP
CITY ENGINEER
DATE: 03/03/2020

ARCHITECTURAL DIVISION
ARCHITECT/ENGINEER: VIRGILIO AGANAN LIC. NO.: C36079 — 03/03/2020
DESIGNED BY: VIRGILIO AGANAN — 03/03/2020
DRAWN BY: AUTUMN WAGGONER — 03/03/2020
CHECKED BY: VIRGILIO AGANAN — 03/03/2020
APPROVED BY: VIRGILIO AGANAN — 03/03/2020

VERTICAL CONTROL:
HORIZONTAL CONTROL:
SHEET TITLE: ENLARGED GRADING PLAN
PROJECT: GRANADA HILLS POOL AND BATHHOUSE REPLACEMENT PROJECT
ADDRESS: 16730 CHATSWORTH STREET GRANADA HILLS, CA 91344

BID SET
PROJECT ISSUE DATE: 06/22/21

WORK ORDER NO. #E170517
PLAN FILE NO. #308
DRAWING NO. C301
SHEET 6 OF SHEETS 19

PLOTTED: 09/18/2019 1:00:00 PM

MATCHLINE - SEE SHEET C3.01

EXISTING BUILDING

EXISTING BASKETBALL COURT

EXISTING BUILDING

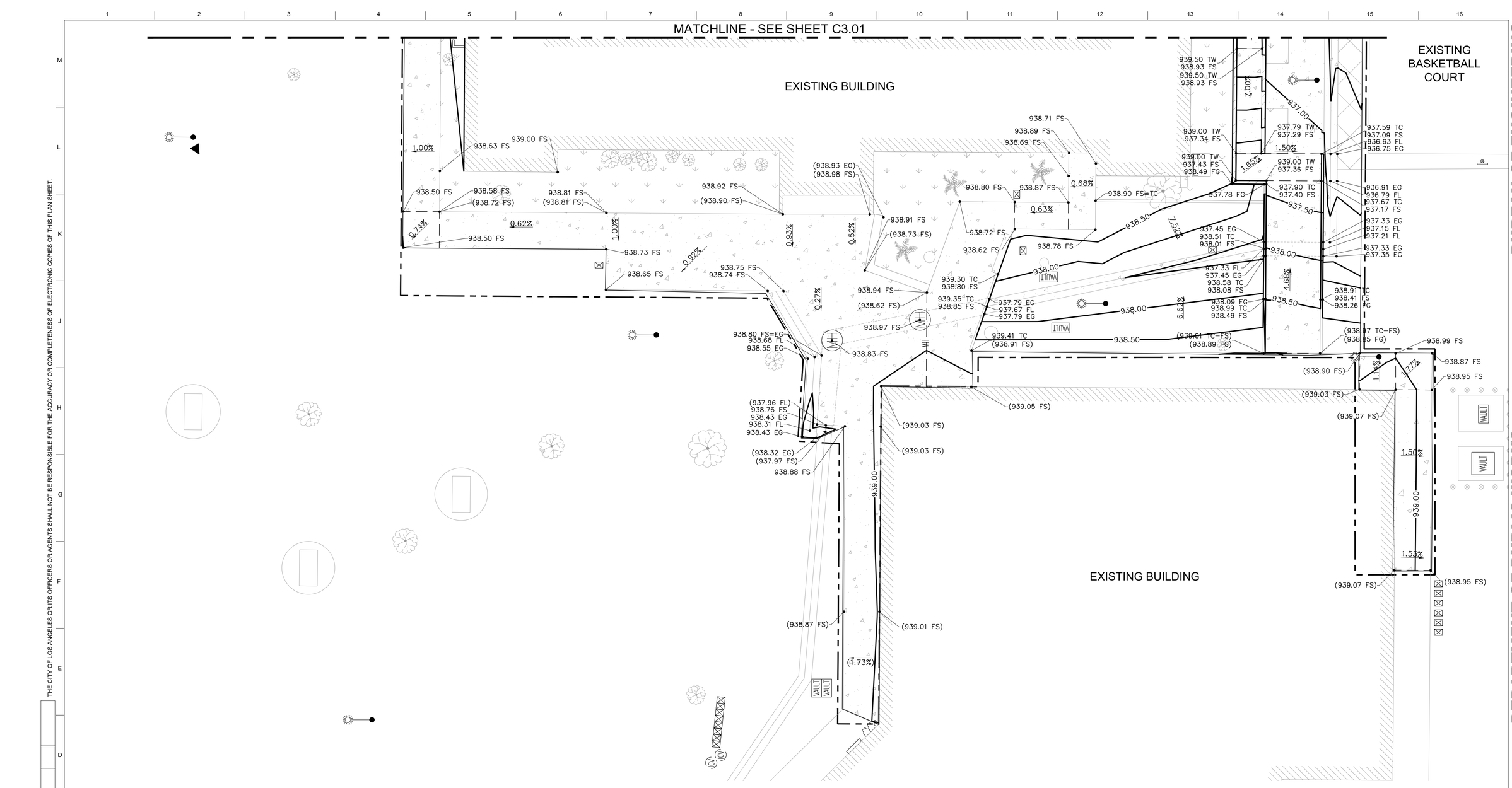

SHEET NOTES:

1. FOR GENERAL NOTES, LEGEND AND ABBREVIATIONS, SEE SHEETS C1.00 AND C1.01.
2. SEE ARCHITECTURAL AND LANDSCAPE DRAWINGS FOR OTHER SITE RELATIVE DIMENSIONS NOT SHOWN ON THIS DRAWING.
3. FOR FINAL GRADING PLAN NOTES, SEE THIS SHEET.
4. FOR ELEVATION SHOWN ON THIS PLAN SUCH AS TOP OF GRATE, CLEAN OUT, MANHOLE COVER, TOP OF DRAINAGE GRATES, TOP OF RIM CONTRACTOR TO COORDINATE ELEVATION SHOWN ON UTILITY PLANS. REPORT/NOTIFY ENGINEER FOR ANY CONFLICT/DISCREPANCY IN ELEVATION PRIOR TO COMMENCEMENT OF WORK.
5. CONTRACTOR SHALL VERIFY ALL CONDITIONS AND DIMENSIONS AND SHALL REPORT ANY DISCREPANCIES TO THE CPM OR IOR PRIOR TO THE COMMENCEMENT OF ANY WORK.
6. CONTRACTOR SHALL VERIFY JOINING OF NEW IMPROVEMENT TO ADJACENT FEATURES, EXISTING/ MATCH TO EXISTING FEATURES WITH SURVEY INFORMATION, CURRENT SITE CONDITION AND WITH THE DESIGN GRADE & ELEVATIONS AND SHALL REPORT ANY DISCREPANCIES TO THE CPM OR IOR PRIOR TO THE COMMENCEMENT OF WORK.

ENLARGED GRADING PLAN

10 5 0 10 20

SCALE: 1" = 10'

BUREAU OF ENGINEERING
OFFICIAL RECORD

THE CITY OF LOS ANGELES OR ITS OFFICERS OR AGENTS SHALL NOT BE RESPONSIBLE FOR THE ACCURACY OR COMPLETENESS OF ELECTRONIC COPIES OF THIS PLAN SHEET.

TTLB TEMPLATE REVISION DATE: 02/2013
SHEET ISSUE DATE: 01 January, 2000
FILE PATH:

REVISION DATES: (DESIGN STAGE ONLY)

DEPARTMENT OF PUBLIC WORKS
CITY OF LOS ANGELES
BUREAU OF ENGINEERING
ENGINEERING
CITY OF LOS ANGELES

NO.	REVISION DESCRIPTION	DATE	BY

BUILDING NO. -
INDEX NO. RP-300118

REGISTERED PROFESSIONAL ENGINEER
VIRGILIO C. AGANAN
No. C36079
Exp. 6/30/20
CIVIL
STATE OF CALIFORNIA

GARY LEE MOORE, PE, ENV SP
CITY ENGINEER
ARCHITECTURAL DIVISION

		DATE:
ARCHITECT/ENGINEER:	VIRGILIO AGANAN LIC. NO.: C36079	03/03/2020
DESIGNED BY:	VIRGILIO AGANAN	03/03/2020
DRAWN BY:	AUTUMN WAGGONER	03/03/2020
CHECKED BY:	VIRGILIO AGANAN	03/03/2020
APPROVED BY:	VIRGILIO AGANAN	03/03/2020

BID SET
PROJECT ISSUE DATE: 06/22/21

VERTICAL CONTROL:
HORIZONTAL CONTROL:

SHEET TITLE: GRADING PLAN

PROJECT: GRANADA HILLS POOL AND BATHHOUSE REPLACEMENT PROJECT
ADDRESS: 16730 CHATSWORTH STREET GRANADA HILLS, CA 91344

WCA ENGINEERS, INC.
Civil Engineering & Land Development
Tel: (818) 707-0100 Fax: (818) 707-0102

WORK ORDER NO. #E170517
PLAN FILE NO. #308
DRAWING NO. C302
SHEET 7 OF SHEETS 19

PLOTTED: 09/18/2019 1:00:00 PM

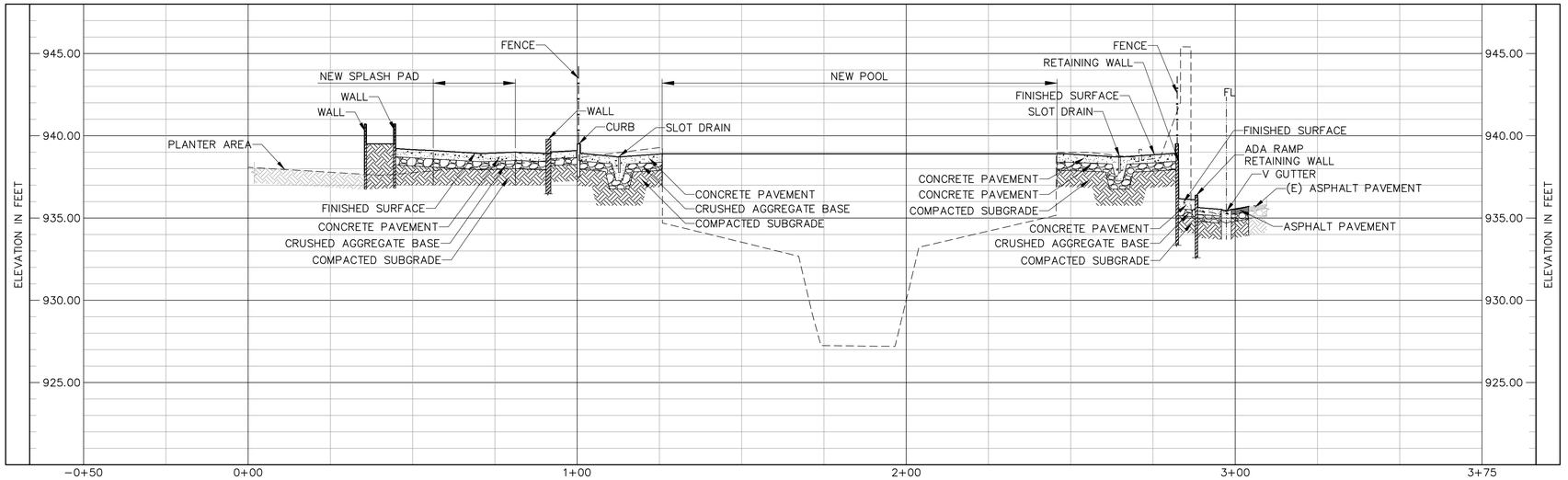

GRADING SECTION 1 / C3.2
SCALE HOR 1"=20' VER 1"=4'

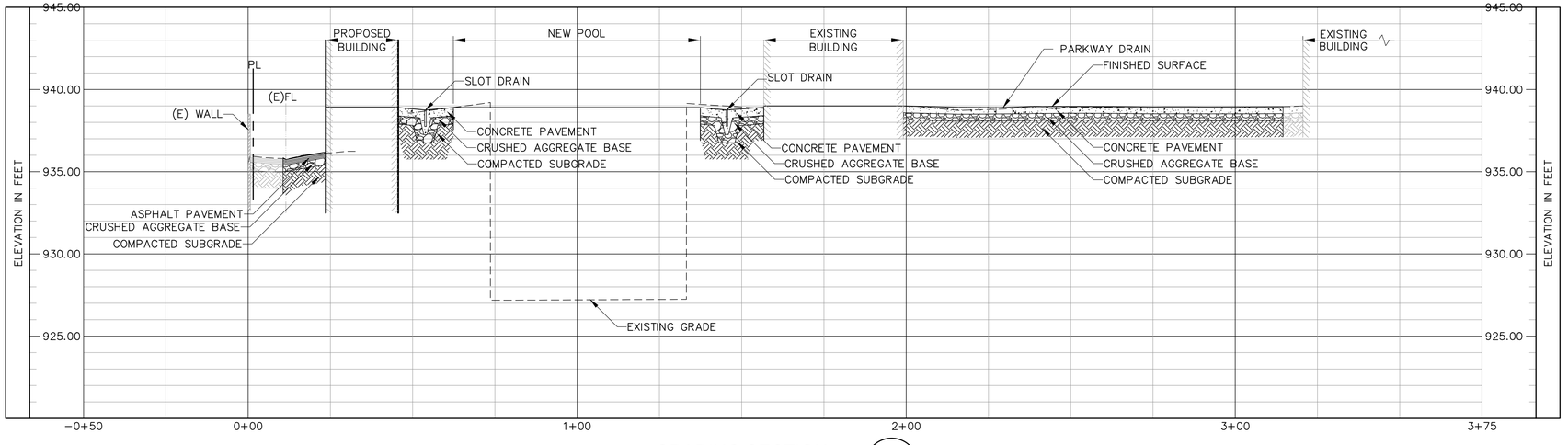

GRADING SECTION 2 / C3.2
SCALE HOR 1"=20' VER 1"=4'

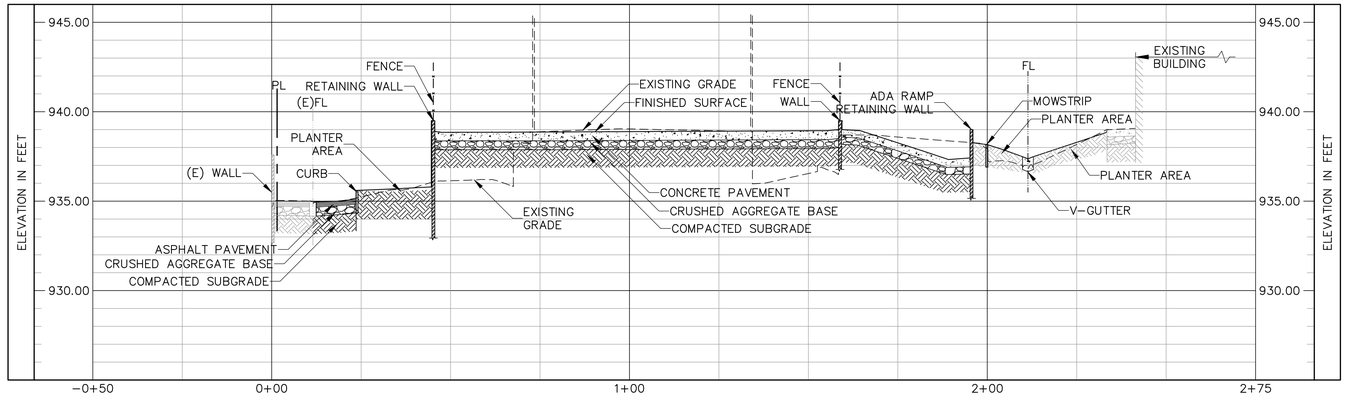

GRADING SECTION 3 / C3.2
SCALE HOR 1"=20' VER 1"=4'

THE CITY OF LOS ANGELES OR ITS OFFICERS OR AGENTS SHALL NOT BE RESPONSIBLE FOR THE ACCURACY OR COMPLETENESS OF ELECTRONIC COPIES OF THIS PLAN SHEET.

TTLB TEMPLATE REVISION DATE: 02/2013
SHEET ISSUE DATE: 01 January, 2000
FILE PATH:

REVISION DATES (DESIGN STAGE ONLY)

DEPARTMENT OF PUBLIC WORKS
BUREAU OF ENGINEERING
CITY OF LOS ANGELES

ENGINEERING
CITY OF LOS ANGELES

NO.	REVISION DESCRIPTION	DATE	BY

BUILDING NO. -

INDEX NO. RP-300118

REGISTERED PROFESSIONAL ENGINEER
VIRGILIO C. AOANAN
No. C36079
Exp. 6/30/20
CIVIL
STATE OF CALIFORNIA

GARY LEE MOORE, PE, ENV SP
ARCHITECTURAL DIVISION

ARCHITECT/ENGINEER:	VIRGILIO AOANAN LIC. NO. C36079	
DESIGNED BY:	VIRGILIO AOANAN	03/03/2020
DRAWN BY:	AUTUMN WAGGONER	03/03/2020
CHECKED BY:	VIRGILIO AOANAN	03/03/2020
APPROVED BY:	VIRGILIO AOANAN	03/03/2020

CITY ENGINEER DATE:

VERTICAL CONTROL:
HORIZONTAL CONTROL:

SHEET TITLE: GRADING SECTIONS

PROJECT: GRANADA HILLS POOL AND BATHHOUSE REPLACEMENT PROJECT

ADDRESS: 16730 CHATSWORTH STREET GRANADA HILLS, CA 91344

BID SET
PROJECT ISSUE DATE: 06/22/21

BUREAU OF ENGINEERING OFFICIAL RECORD

CA ENGINEERS, INC.
401 S. Garfield Avenue, Suite 202, Alhambra, CA 91801
Tel: 626.570.5588 Fax: 626.570.5589

WORK ORDER NO. #E170517

PLAN FILE NO. #308

DRAWING NO. C303

SHEET 8 OF SHEETS 19

PLOTTED:09/18/2019 1:00:00 PM

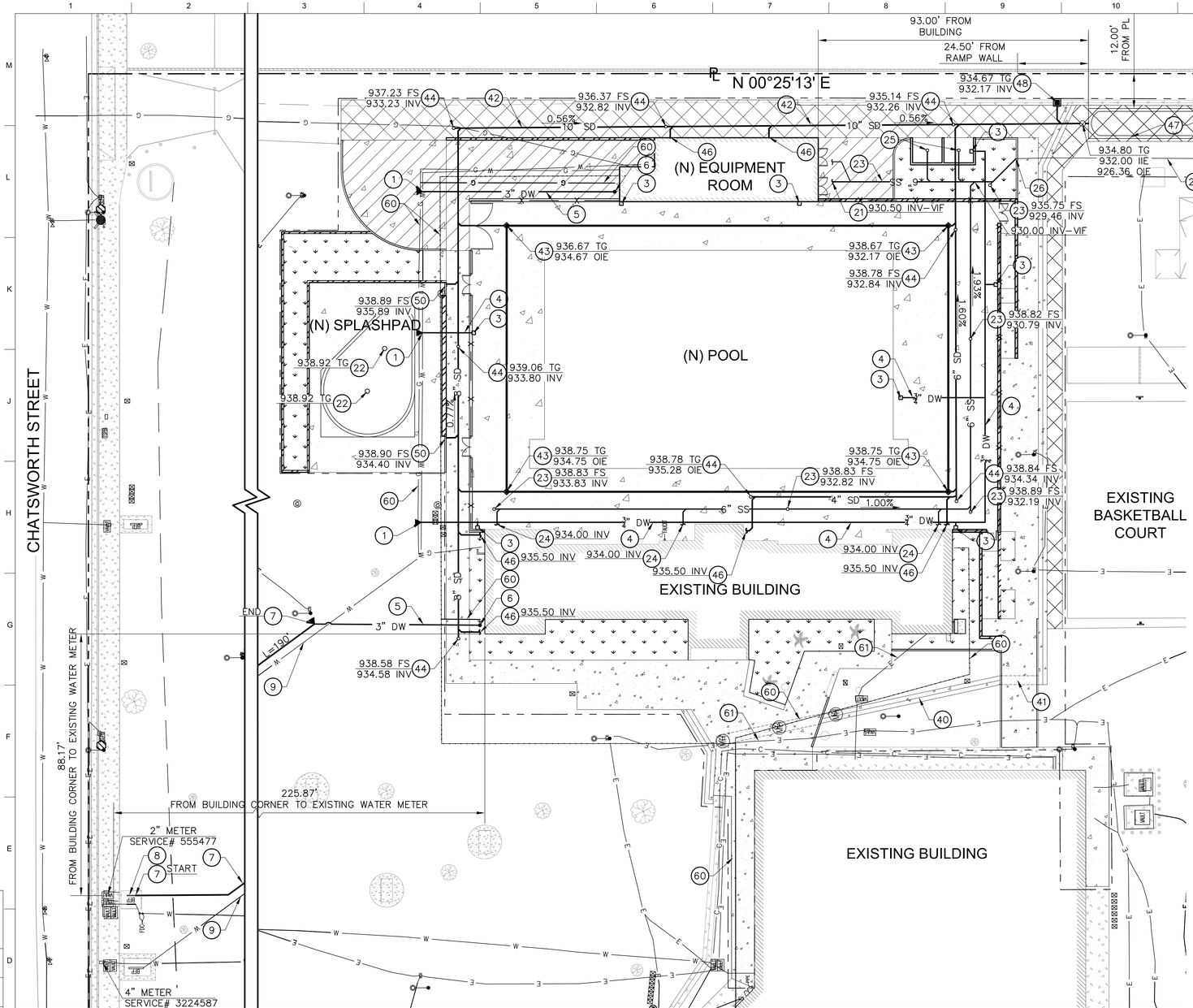

CONSTRUCTION NOTES:

WATER NOTES:

1. CONNECT TO EXISTING 4" DOMESTIC WATER LINE. PROVIDE THRUST BLOCKS PER DETAIL 2 ON SHEET C505.
2. CONNECT TO NEW BUILDING. PROVIDE REDUCED FITTINGS IF REQUIRED. COORDINATE WITH MEP PLANS AND PROVIDE REDUCER FITTINGS IF NECISSARY.
3. INSTALL HOSE BIBB AND HOSE BIBB CONNECTION PER MEP DRAWINGS.
4. INSTALL ¾"ø DOMESTIC WATER LINE COPPER TUBING TYPE L HARD.BEDDING PER DETAIL 1 ON SHEET C503.
5. INSTALL 3"ø PVC DOMESTIC WATER LINE, AWWA C900 PRESSURE CLASS 200(DR14). BEDDING PER DETAIL 1 ON SHEET C503. PROVIDE THRUST BLOCKS PER DETAIL 2 ON SHEET C505.
6. PROVIDE SHUT OFF VALVE WITH YARD BOX. PROVIDE CONCRETE TRAFFIC RATED BOX FOR VALVES IN DRIVEWAYS AND DRIVE AISLES.
7. REPLACE EXISTING 2"ø DOMESTIC WATER LINE WITH 3"ø PVC DOMESTIC WATER PIPE, AWWA C900 PRESSURE CLASS 200(DR14). PROVIDE BEDDING PER DETAIL 1 ON SHEET C503 AND THRUST BLOCKS PER DETAIL 2 ON SHEET C505. REPLACE PIPE LINE UP TO BACKFLOW PREVENTER (APX 190 LF). VERIFY LOCATION IN FIELD.
8. REPLACE EXISTING BACKFLOW PREVENTER WITH 3" WATTS PVS-1000 RP BACKFLOW AND PRESSURE REGULATOR VALVE STATION OR APPROVED EQUAL. COORDINATE WITH FOR APPROVED DEVICE WATER PURVEYOR PRIOR TO ORDERING.
9. EXISTING 3" WATER LINE CONNECTION TO POOL MECHANICAL ROOM.

SANITARY SEWER NOTES:

20. EXISTING 6" ø SANITARY SEWER LINE, VERIFY IN FIELD.
21. CONNECT TO BUILDING, COORDINATE WITH PLUMBING PLANS AND PROVIDE REDUCER FITTINGS AS REQUIRED.
22. INSTALL SPLASH PAD DRAINS AND CONNECTION TO POOL SYSTEM PER AQUATIC DRAWINGS.
23. INSTALL CLEANOUT PER DETAIL 2 ON SHEET C501.
24. INSTALL 6" SEWER LINE PVC SCH 80. USE CAST IRON FOR PIPE WHERE COVER IS LESS THAN ONE FOOT. BEDDING PER DETAIL 1 ON SHEET C504.
25. INSTALL FLOOR DRAIN, ZURN Z507 MEDIUM DUTY OR EQUAL.
26. CONNECT TO EXISTING SEWER LINE.

STORM DRAIN NOTES:

40. CONCRETE V GUTTER PER DETAIL 4 ON SHEET C502.
41. CONCRETE PARKWAY DRAIN PER APWA 151-2.
42. INSTALL STORM DRAIN LINE PVC SCH 80, SIZE PER PLAN. USE CAST IRON FOR PIPE WHERE COVER IS LESS THAN ONE FOOT. BEDDING PER DETAIL 1 ON SHEET C503.
43. INSTALL SLOT DRAIN PER DETAILS 1 & 2 ON SHEET C500.
44. INSTALL CLEANOUT PER DETAIL 2 ON SHEET C5.01.
45. INSTALL BUBBLER CATCH BASIN PER DETAIL 5 ON SHEET C502. PROVIDE "NO DUMPING" STENCIL PER DETAIL 3 ON SHEET C502.
46. CONNECT TO BUILDING DOWNSPOUT. PROVIDE REDUCER FITTINGS AS REQUIRED.
47. ADS STORMTECH INFILTRATION SYSTEM PER DETAILS ON SHEETS C504 AND C505.
48. INSTALL CATCH BASIN PER DETAIL 5 ON SHEET C502. PROVIDE "NO DUMPING" STENCIL PER DETAIL 3 ON SHEET C502.

MISCELLANEOUS UTILITY NOTES:

60. GAS LINE AND CONNECTIONS PER MEP DRAWINGS.
61. ELECTRICAL LINE AND CONNECTIONS PER MEP DRAWINGS.

SHEET NOTES:

1. FOR GENERAL NOTES, LEGEND AND ABBREVIATIONS, SEE SHEET C100.
2. FOR UTILITY NOTES, SEE SHEET C101.
3. SEE ARCHITECTURAL DRAWINGS FOR OTHER SITE RELATIVE DIMENSIONS NOT SHOWN ON THIS DRAWING.
4. FOR TOP OF GRATE, CLEAN OUT, MANHOLE COVER, TOP OF DRAINAGE GRATES, TOP OF RIM COORDINATE WITH GRADING PLANS. CONTRACTOR TO REPORT/NOTIFY THE CITY ENGINEER FOR ANY CONFLICT IN ELEVATION AND LOCATION PRIOR TO COMMENCEMENT OF WORK.
5. PRIOR TO START OF CONSTRUCTION, CONTRACTOR SHALL VERIFY IN FIELD INVERT ELEVATIONS AND UTILITY CROSSINGS AND REPORT UNKNOWN CONDITIONS, FEATURES TO THE CITY ENGINEER.
7. CONTRACTOR TO VERIFY POINT OF CONNECTION BETWEEN SEWER LATERAL AND BUILDING PLUMBING SEWER LAYOUT.
8. CONTRACTOR SHALL FIELD VERIFY EXISTING SEWER LINE CONNECTION, SHALL USE AND PAY FOR CCTV TO VERIFY PIPE SIZE, INVERT ELEVATION AND IDENTIFY IF THE EXISTING PIPE IS DAMAGED. IF DAMAGED THE EXISTING PIPE SHALL BE REPLACED BASED ON THE FINDINGS. IF NEW LATERAL IS REQUIRED, CONTRACTOR TO INSTALL 6"ø SEWER LATERAL AT 1% MINIMUM SLOPE.

STORMWATER MITIGATION
LOW IMAPCT DEVELOPMENT (LID)
APPROVED WITH CONDITIONS

This set of plans and specifications must be at the jobsite during construction

Stormwater Observation Report (SOR) is required prior to issuance of Certificate of Occupancy or final sign off.

Total Pages _____

Restamped `

Digitally Signed By: A. Eltawil Date: 08/06/2020
Department of Public Works - Bureau of Sanitation
Watershed Protection Division

BUREAU OF ENGINEERING OFFICIAL RECORD

REGISTERED PROFESSIONAL ENGINEER VIRGILIO C. AOANAN No. C36079 Exp. 6/30/20 CIVIL STATE OF CALIFORNIA

UTILITY PLAN

SCALE: 1" = 20'

BID SET
PROJECT ISSUE DATE: 06/22/21

CITY OF LOS ANGELES
DEPARTMENT OF PUBLIC WORKS
BUREAU OF ENGINEERING
ENGINEERING
CITY OF LOS ANGELES

NO.	REVISION DESCRIPTION	DATE	BY

BUILDING NO. -
INDEX NO. RP-300118

GARY LEE MOORE, PE, ENV SP CITY ENGINEER
ARCHITECTURAL DIVISION

		DATE:
ARCHITECT/ENGINEER:	VIRGILIO AOANAN LIC. NO.: C36079	03/03/2020
DESIGNED BY:	VIRGILIO AOANAN	03/03/2020
DRAWN BY:	AUTUMN WAGGONER	03/03/2020
CHECKED BY:	VIRGILIO AOANAN	03/03/2020
APPROVED BY:	VIRGILIO AOANAN	03/03/2020

VERTICAL CONTROL:
HORIZONTAL CONTROL:

SHEET TITLE: UTILITY PLAN

PROJECT: GRANADA HILLS POOL AND BATHHOUSE REPLACEMENT PROJECT
ADDRESS: 16730 CHATSWORTH STREET GRANADA HILLS, CA 91344

MCA ENGINEERS, INC. CIVIL & STRUCTURAL ENGINEERING 1841 S. Garfield Avenue, Suite 2G, Alhambra, CA 91801 Tel: (626) 282-4448 Fax: (626) 282-4422

WORK ORDER NO. #E170517
PLAN FILE NO. #308
DRAWING NO. C400
SHEET 9 OF SHEETS 18

PLOTTED:09/18/2019 1:00:00 PM

THE CITY OF LOS ANGELES OR ITS OFFICERS OR AGENTS SHALL NOT BE RESPONSIBLE FOR THE ACCURACY OR COMPLETENESS OF ELECTRONIC COPIES OF THIS PLAN SHEET.

REVISION DATES (DESIGN STAGE ONLY)

FILE PATH:
SHEET ISSUE DATE: 01 January, 2000
FILE PLOT DATE REVISION DATE: 06/22/21

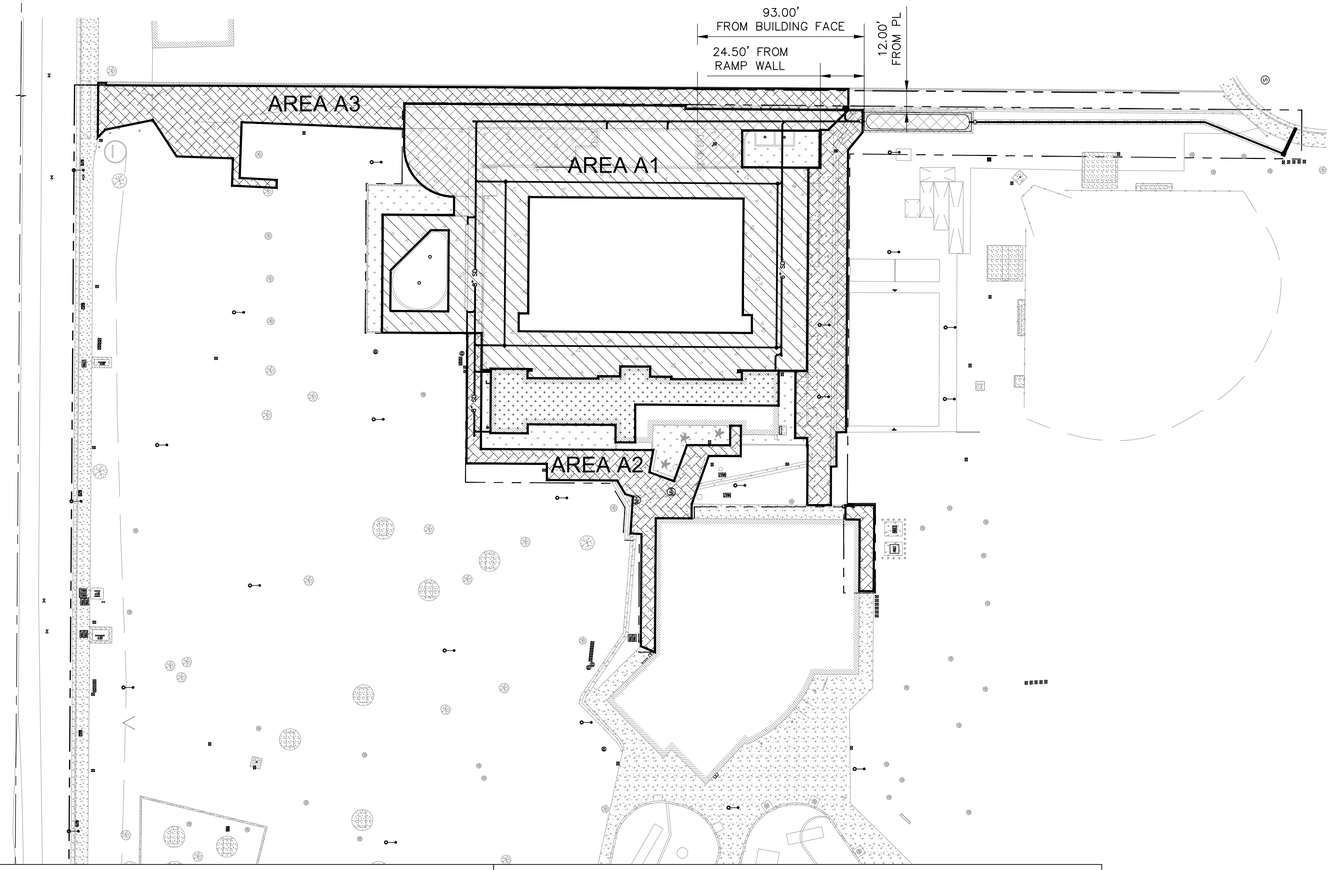

LID SUMMARY TABLE

TRIBUTARY AREA		HARDSCAPE AREA (SF)	SWQDV	BMP DESCRIPTION AND QUANTITY	PROVIDED TREATMENT VOLUME (CF)
A1		22,446	1,670		
A2		(8,702 SF IN AREA A2 IS COMPENSATED FOR IN AREA A3 & ROOF)			
A3		7,252	540		
ROOF		3,756	280		
TOTAL:		33,454	2,490	ADS STORMTECH	2,547

NOTES:

ANY CHANGES (TYPE, SIZE, LOCATION) TO APPROVED STORMWATER BEST MANAGEMENT PRACTICE(S) (BMPS) MUST OBTAIN WRITTEN APPROVAL FROM LOS ANGELES DEPARTMENT OF PUBLIC WORKS, BUREAU OF SANITATION PRIOR TO CONSTRUCTION OF BMP(S).

Low Impact Development (LID)
Post Construction Stormwater Mitigation
Best Management Practices (BMPs)

STORMWATER BMP(s) VERIFICATION

Upon LADBS Inspector Verification that approved stormwater BMPs are in place, a Stormwater Observation Report (SOR) Form shall be submitted to Department of Public Works, Bureau of Sanitation. 201 N. Figueroa, 3rd floor, station 18.

Project Address: 16730 CHATSWORTH STREET GRANADA HILLS, CA 91344

RESIDENTIAL (4 UNITS OR LESS, <10,000 SF, <2,500 SF within a ESA)

Item #	Stormwater BMP	Description (Units, total)	Reference Sheet(s)* (Sheet #)
1	Rain Tank(s) – 50 to 129 gal each		
2	Rain Tank(s) – > 130 gal min		
3	Shade Tree - min 15 gal		
4	Flow thru Planter(s)		
5	Permeable pavers / Porous concrete (min 10% open space)	☐ Incidental; _____ total SF ☐ Infiltration; _____ total SF	
6	Rain Garden	☐ #____ - Lined; _____ total SF ☐ #____ - Unlined; _____ total SF	
7	Dry Well		
8	SUMP Pump (modification was not required)		

ALL OTHER DEVELOPMENT
(Residential: 5 ≥ units, 10,000 ≥ SF, within a ESA and ≥2,500SF)

	Item #	Stormwater BMP	Description (Units, total)	Reference Sheet(s)* (Sheet #)
Infiltration	1	Infiltration Basin / Trench	1 UNIT WITH 2,547 CF	C4.00,C4.01
	2	Dry Well		
	3	Permeable pavers / Porous concrete (min 10% open space)	☐ Incidental;_____ total SF ☐ Infiltration;_____ total SF	
Capture & Use	4	Rain Tank(s) – 530 gal min		
	5	Cistern	☐ Above Grade ☐ Below Grade	
Treat & Discharge	6	Flow thru Planter(s)		
	7	Biofiltration	☐ #____ - Lined; _____ total SF ☐ #____ - Unlined; _____ total SF	
	8	Vegetative Swale / Filter Strip		
	9	Catch Basin Filter(s)		
	10	Trench Drain Filter(s)		
	11	Down Spout Filter(s)		
	12	SUMP Pump (modification was not required)		

* At a minimum: Site Plan, Architectural Elevations, Roof Plan, Civil Sheets and Detail

STORMWATER OBSERVATION REPORT FORM

(Residential ≥ 5 units & All other Development)

LOW IMPACT DEVELOPMENT

IN THE EVENT THAT THE APPROVED STORMWATER BMP CANNOT BE BUILT PER PLANS (OR ANY MODIFICATION), CONSULT WITH BUREAU OF SANITATION STAFF PRIOR TO ANY PLAN MODIFICATIONS. FAILURE TO DO SO MAY DELAY OBTAINING A FINAL APPROVAL AND CERTIFICATE OF OCCUPANCY (C OF O).

STORMWATER OBSERVATION *means the visual observation of the stormwater related Best Management Practices (BMPs) for conformance with the approved LID Plan at significant construction stages and at completion of the project. Stormwater observation does not include or waive the responsibility for the inspections required by Section 108 or other sections of the City of Los Angeles Building Code.*

STORMWATER OBSERVATION *must be performed by the engineer or architect responsible for the approved LID Plan or designated staff in their employment.* ***As part of the observation, provide photos of the BMPs taken during various construction phases.***

STORMWATER OBSERVATION REPORT *must be signed and stamped (see below) by the engineer or architect responsible for the approved LID Plan and submitted to the city prior to the issuance to the certificate of occupancy.* ***PRIOR TO CERTIFICATE OF OCCUPANCY (C of O), SOR FORM, PRINTED PHOTOS OF THE BMPS TAKEN DURING VARIOUS CONSTRUCTION PHASES AND APPROVED STAMPED PLANS BY THE BUREAU OF SANITATION MUST BE SUBMITTED TO THE PUBLIC COUNTER FOR STAFF APPROVAL.***

Project Address: 16730 CHATSWORTH STREET GRANADA HILLS. CA 91344	Building Permit No.:
Name of Engineer/Architect responsible for the approved LID Plan: Virgil Aoanan	Phone Number: 323-729-6098

List all BMPs installed as part of the project: Coordinates of the most significant (or typical) BMPs:

BMP Type: ADS STORMTECH # of units: 1 Lat: 34.2642 ; Long: -118.4962	BMP Type:_____ # of units: ___ Lat: _____ ; Long:_____
BMP Type:_____ # of units: ____ Lat: _____ ; Long:_____	BMP Type:_____ # of units: ____ Lat: _____ ; Long:_____

I DECLARE THAT THE FOLLOWING STATEMENTS ARE TRUE TO THE BEST OF MY KNOWLEDGE:

1. I am the engineer or architect responsible for the approved LID Plan, and;
2. I, or designated staff under my responsible charge, has preformed the required site visits at each significant construction stage and at the completion to verify that the Best Management Practices (BMPs) as shown on approved plans have been constructed and installed in accordance with the approved LID Plan.

Wet Stamp of Engineer or Architect

Signature Date

LID PLAN

40 20 0 40 80

SCALE: 1" = 40'

BUREAU OF ENGINEERING
OFFICIAL RECORD

BUREAU OF ENGINEERING
CITY OF LOS ANGELES

DEPARTMENT OF PUBLIC WORKS
CITY OF LOS ANGELES

ENGINEERING

NO.	REVISION DESCRIPTION	DATE	BY

BUILDING NO. 1

INDEX NO. RP-300118

REGISTERED PROFESSIONAL ENGINEER
VIRGILIO C. AOANAN
No. C36079
Exp. 6/30/20
CIVIL
STATE OF CALIFORNIA

GARY LEE MOORE, PE, ENV SP
CITY ENGINEER

ARCHITECTURAL DIVISION

		DATE:
ARCHITECT/ENGINEER:	VIRGILIO AOANAN LIC. NO.: C36079	03/03/2020
DESIGNED BY:	VIRGILIO AOANAN	03/03/2020
DRAWN BY:	AUTUMN WAGGONER	03/03/2020
CHECKED BY:	VIRGILIO AOANAN	03/03/2020
APPROVED BY:	VIRGILIO AOANAN	03/03/2020

VERTICAL CONTROL:
HORIZONTAL CONTROL:

SHEET TITLE: LID PLAN

PROJECT: GRANADA HILLS POOL AND BATHHOUSE REPLACEMENT PROJECT

ADDRESS: 16730 CHATSWORTH STREET GRANADA HILLS. CA 91344

MCA ENGINEERS, INC.
CIVIL STRUCTURAL
1541 S. Grand Avenue, Suite 210, Alhambra, CA 91801
Tel: 626.570.9664 Fax: 626.570.9665

WORK ORDER NO. #E170517

PLAN FILE NO. #308

DRAWING NO. C401

SHEET 10 OF SHEETS 19

BID SET
PROJECT ISSUE DATE: 06/22/21

PLOTTED: 09/18/2019 1:00:00 PM

THE CITY OF LOS ANGELES OR ITS OFFICERS OR AGENTS SHALL NOT BE RESPONSIBLE FOR THE ACCURACY OR COMPLETENESS OF ELECTRONIC COPIES OF THIS PLAN SHEET.

TTLB TEMPLATE REVISION DATE: 02/2013
SHEET ISSUE DATE: 01 January, 2000
FILE PATH:

REVISION DATES (DESIGN STAGE ONLY)

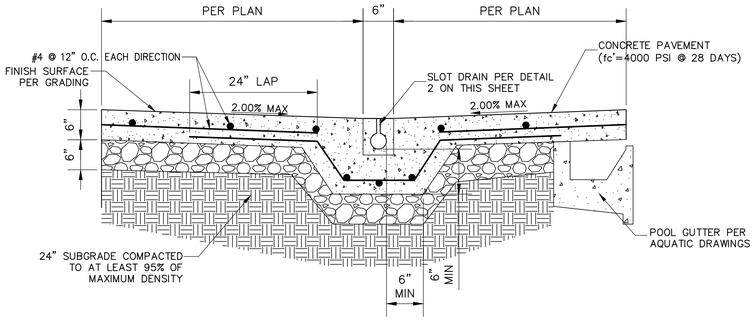

NOTES:

1. FOR CONSTRUCTION JOINTS, EXPANSION JOINTS, AND FINISH SURFACE REQUIREMENTS, REFER TO AQUATICS DRAWINGS.
2. CONCRETE, fc'=4000 psi @ 28 DAYS. REBARS, fy=60,000 psi ASTM A615.
3. REFER TO ARCHITECTURAL DRAWINGS FOR FINISHES.

LOCATION	CONCRETE PAVEMENT THICKNESS "A"	CAB THICKNESS "B"
POOL DECK	6"	6"

1 POOL DECK CONCRETE DETAIL

SCALE: NOT TO SCALE

LOCATION	CONCRETE PAVEMENT THICKNESS "A"	CAB THICKNESS "B"
PEDESTRIAN WALKWAY	5"	5"
SPLASH PAD	6"	6"
HEAVY TRAFFIC	8"	8"

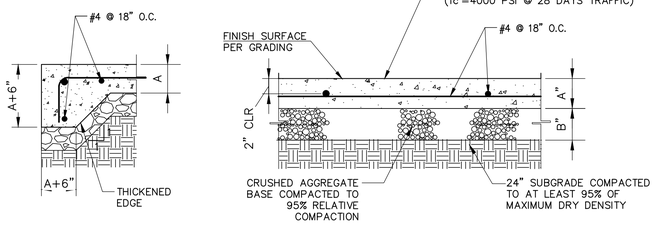

NOTES:

1. FOR CONSTRUCTION JOINTS, EXPANSION JOINTS, AND FINISH SURFACE REQUIREMENTS, REFER TO DETAIL 4 ON THIS SHEET AND ARCHITECTURAL DRAWINGS.
2. CONCRETE, fc'=3,500 psi @ 28 DAYS. REBARS, fy=60,000 psi ASTM A615 FOR NONTRAFFIC AREAS. fc'=4,000 psi @ 28 DAYS. REBARS, fy=60,000 psi ASTM A615 FOR TRAFFIC AREAS.
3. REFER TO ARCHITECTURAL DRAWINGS FOR FINISHES.
4. THESE CONDITIONS ARE FOR ON-SITE IMPROVEMENTS ONLY.

3 CONCRETE PAVEMENT DETAIL

SCALE: NOT TO SCALE

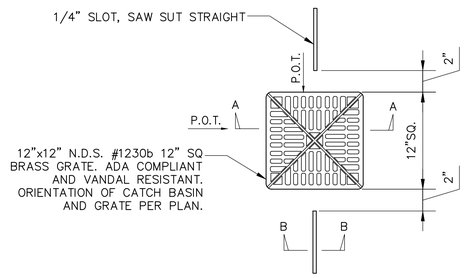

PLAN

ADA REQUIREMENT:

WHEN CATCH BASIN IS IN PATH OF TRAVEL, PROVIDE GRATE WITH 1/4" MAXIMUM SPACING IN DIRECTION OF TRAVEL BOTH WAYS.

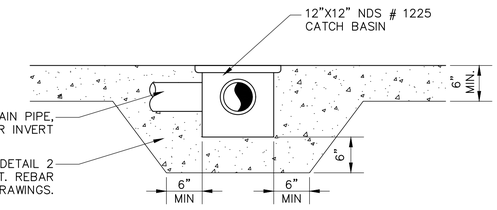

SECTION A-A

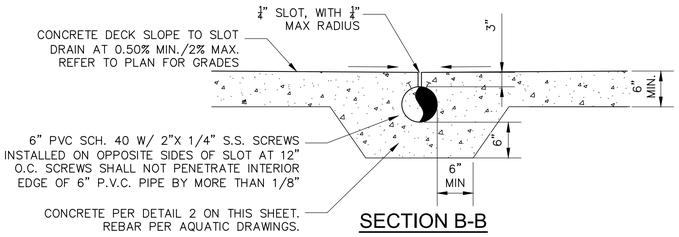

SECTION B-B

NOTES:

1. SEE AQUATIC DRAWINGS FOR REMAINING INSTRUCTION AND DETAIL.

2 POOL DECK SLOT DRAIN DETAIL

SCALE: NOT TO SCALE

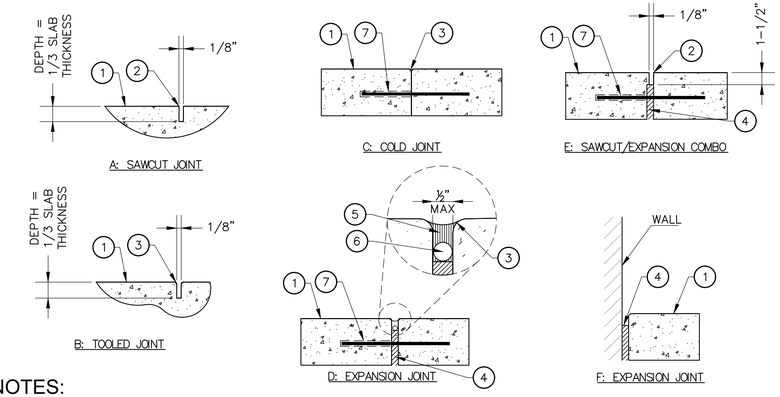

NOTES:

1. PAVING FINISH SURFACE.
2. SAWCUT.
3. 1/4" R. @ EDGES. TYP.
4. PREMOLDED E.J. FILLER.
5. JOINT SEALANT. COLOR TO BE SELECTED BY ARCHITECT. SUBMIT COLOR SAMPLES PRIOR TO INSTALLATION. PROVIDE SILICA SAND FOR ANTI-SLIP.
6. BACKER ROD.
7. 18" #4 REBAR W/ 'SPEED DOWEL' @ 36" OC, CENTER IN CONC. AT COLD JOINTS & E.J.'S
8. CONTROL JOINTS 10 O.C MAX.
9. CONTRACTOR TO SUBMIT SHOP DRAWINGS OF CONTROL JOINT AND EXPANSION JOIN LAYOUT.
10. SEE AQUATIC DRAWINGS FOR POOL DECK JOINT DETAILS.

4 JOINT AND TRANSITION DETAILS

SCALE: NOT TO SCALE

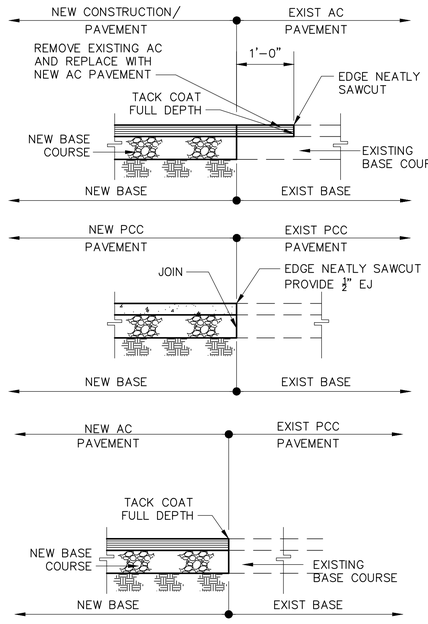

BUREAU OF ENGINEERING OFFICIAL RECORD

THE CITY OF LOS ANGELES OR ITS OFFICERS OR AGENTS SHALL NOT BE RESPONSIBLE FOR THE ACCURACY OR COMPLETENESS OF ELECTRONIC COPIES OF THIS PLAN SHEET.

TTLB TEMPLATE REVISION DATE: 02/2013
SHEET ISSUE DATE: 01 January, 2000
FILE PATH:

REVISION DATES (DESIGN STAGE ONLY)

DEPARTMENT OF PUBLIC WORKS
BUREAU OF ENGINEERING
CITY OF LOS ANGELES
ENGINEERING

NO.	REVISION DESCRIPTION	DATE	BY

BUILDING NO. -
INDEX NO. RP-300118

REGISTERED PROFESSIONAL ENGINEER — PHILLIP C. ADAMAN — No. C36079 — Exp. 6/30/20 — CIVIL — STATE OF CALIFORNIA

CITY ENGINEER — DATE: 03/03/2020

GARY LEE MOORE, PE, ENV SP
ARCHITECTURAL DIVISION

ARCHITECT/ENGINEER: VIRGILIO ADANAN LIC. NO: C36079 — DATE: 03/03/2020
DESIGNED BY: VIRGILIO ADANAN — DATE: 03/03/2020
DRAWN BY: AUTUMN WAGGONER — DATE: 03/03/2020
CHECKED BY: VIRGILIO ADANAN — DATE: 03/03/2020
APPROVED BY: VIRGILIO ADANAN — DATE: 03/03/2020

VERTICAL CONTROL:
HORIZONTAL CONTROL:

SHEET TITLE: MISCELLANEOUS DETAILS

PROJECT: GRANADA HILLS POOL AND BATHHOUSE REPLACEMENT PROJECT

ADDRESS: 16730 CHATSWORTH STREET GRANADA HILLS, CA 91344

CITY OF LOS ANGELES

BID SET
PROJECT ISSUE DATE: 06/22/21

CA ENGINEERS, INC. — Civil & Structural Engineering — 16415 Golden Avenue, Suite 150, Alvarado, CA 91901 — Tel: 619.660.4611 — Fax: 619.660.4612

WORK ORDER NO. #E170517
PLAN FILE NO. #308
DRAWING NO. C500
SHEET 11 OF SHEETS 19

PLOTTED:09/18/2019 1:00:00 PM

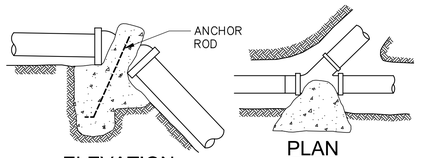

ELEVATION
VERTICAL BEND
(SEE NOTE 5)

PLAN
WYE

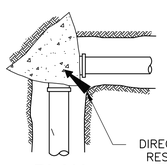

PLAN

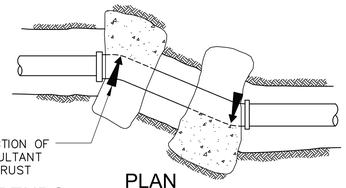

PLAN

BENDS

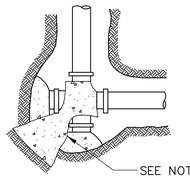

PLAN

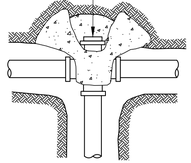

PLAN

CROSSES

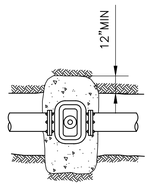

PLAN
VALVES

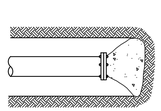

PLAN
BLIND FLANGE OR PLUG AT END OF WATERMAIN

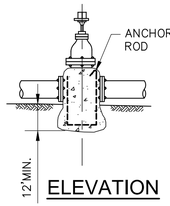

ELEVATION

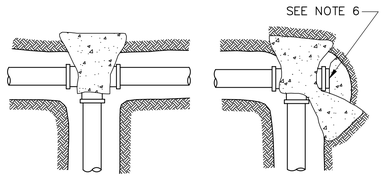

PLAN

PLAN

TEES

TABLE 1

MINIMUM BEARING AREAS IN SQ.FT.				
MAIN SIZE	TEE	90° BEND	45° BEND	22 1/2° BEND
6"	4	4	4	3
8"	5	7	4	3
10"	9	12	6	4
12"	12	16	9	6

BASED ON 150 PSI W.W.R. PRESSURE & SOIL BEARING LOADS OF 2000 PSF THE RATIO OF WIDTH TO HEIGHT SHALL NOT EXCEED 1 1/2 TO 1

TEES,PLUGS,CAPS & HYDRANTS.

NOTES:

1. ALL ANCHOR AND THRUST BLOCKS SHALL BEAR AGAINST UNDISTURBED SOIL.
2. MINIMUM ALLOWABLE WATER PRESSURE FOR DESIGN OF THRUST BLOCKS IS 150 PSI. BEARING AREA INCREASE IN PRESSURE.
3. ALL CONCRETE USED IN THRUST BLOCKS SHALL ATTAIN 2000 PSI STRENGTH.
4. ALL ANCHOR RODS SHALL BE REINFORCING STEEL AND A MINIMUM OF 1/2–INCH IN DIAMETER.
5. USE ANCHOR BLOCKS AT VERTICAL BENDS WHEN PIPE IS ABOVE OR BELOW GROUND. SIZE OF BLOCK AND ROD SHALL BE AS SHOWN ON THE PLANS OR AS DETERMINED BY THE ENGINEER IN THE FIELD.
6. USE 30 POUND FELT TO INSURE COLD JOINT.
7. CONCRETE SHALL NOT COME INTO DIRECT WITH ASBESTOS CEMENT PIPE.
8. FOR PIPE 14" IN DIAMETER OR LARGER ENGINEER IS TO SUBMIT CALCULATIONS.

TABLE II

SOIL TYPE	MAX. ALLOWABLE SOIL BEARING VALUES	FACTORS FOR INCREASING AREAS IN TABLE 1
LOOSE SAND	500 PSF	4
SOFT SANDY CLAY	1000 PSF	2
ADOBE	1000 PSF	2
COMPACT FINE SAND	2000 PSF	1
COMPACT COARSE SAND	2000 PSF	1
MEDIUM STIFF CLAY	2000 PSF	1

THE CONTRACTOR SHALL FOLLOW THE RECOMMENDATIONS OF GEOTECHNICAL REPORT FOR DETERMINING THE SAFE SOIL BEARING VALUES AND SIZE OF BEARING AREAS.
BASED ON 2 FEET MINIMUM DEPTH OF COVER OVER THE PIPE.

1 THRUST BLOCK DETAILS
SCALE: NOT TO SCALE

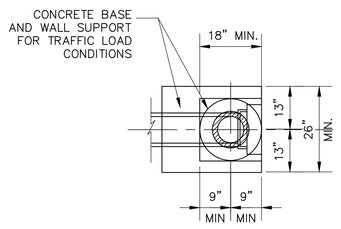

SECTION B-B

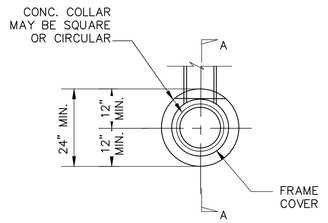

PLAN

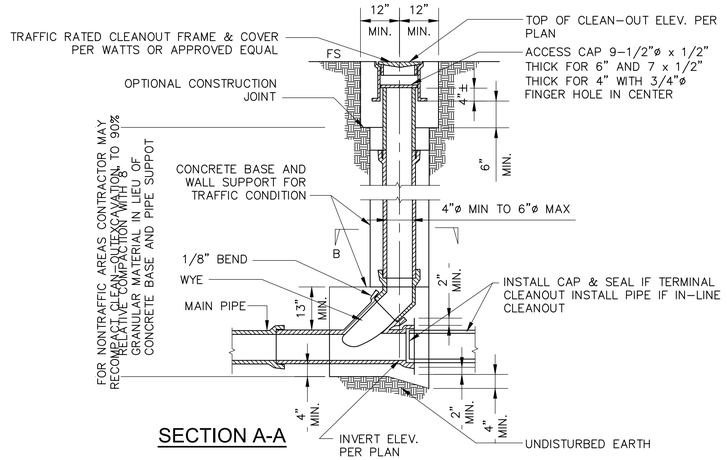

SECTION A-A

NOTES:

1. FOR STORM DRAINAGE CLEAN OUT COVER, PROVIDE COVER WITH INSCRIPTION "D" TO DENOTE STORM DRAINAGE.
2. FOR SANITARY SEWER CLEAN OUT COVER, PROVIDE COVER WITH INSCRIPTION "S" TO DENOTE SANITARY SEWER.

2 CLEANOUT DETAIL
SCALE: NOT TO SCALE

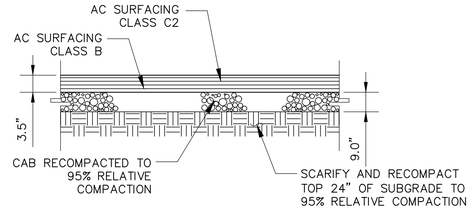

NOTES:

1. FOR PAVEMENT TRANSITION DETAILS REFER TO DETAIL 4 ON SHEET C–5.00.
2. FOR PAVEMENT THICKNESS REFER TO SITE PLAN OR MATCH THICKNESS OF EXISTING PAVEMENT.

BUREAU OF ENGINEERING
OFFICIAL RECORD

3 ASPHALT PAVEMENT DETAIL
SCALE: NOT TO SCALE

BUREAU OF ENGINEERING
CITY OF LOS ANGELES

NO.	REVISION DESCRIPTION	DATE	BY

BUILDING NO. -
INDEX NO. RP-300118

REGISTERED PROFESSIONAL ENGINEER
VIRGILIO C. AOANAN
No. C36079
Exp. 6/30/20
CIVIL
STATE OF CALIFORNIA

DEPARTMENT OF PUBLIC WORKS
CITY OF LOS ANGELES

GARY LEE MOORE, PE, ENV SP
CITY ENGINEER

ARCHITECTURAL DIVISION

		DATE:
ARCHITECT/ENGINEER:	VIRGILIO AOANAN LIC. NO.: C36079	
DESIGNED BY:	VIRGILIO AOANAN	03/03/2020
DRAWN BY:	AUTUMN WAGGONER	03/03/2020
CHECKED BY:	VIRGILIO AOANAN	03/03/2020
APPROVED BY:	VIRGILIO AOANAN	03/03/2020

VERTICAL CONTROL:
HORIZONTAL CONTROL:

SHEET TITLE: MISCELLANEOUS DETAILS

PROJECT: GRANADA HILLS POOL AND BATHHOUSE REPLACEMENT PROJECT

ADDRESS: 16730 CHATSWORTH STREET GRANADA HILLS, CA 91344

BID SET
PROJECT ISSUE DATE: 06/22/21

WORK ORDER NO.
#E170517

PLAN FILE NO.
#308

DRAWING NO.
C501

SHEET 12 OF SHEETS 19

PLOTTED:09/18/2019 1:00:00 PM

NCA ENGINEERS, INC.
Civil & Structural Engineers
700 S. Central Avenue, Suite 210, Glendale, CA 91201
Tel: (818)956-8100 Fax: (818)956-8101

THE CITY OF LOS ANGELES OR ITS OFFICERS OR AGENTS SHALL NOT BE RESPONSIBLE FOR THE ACCURACY OR COMPLETENESS OF ELECTRONIC COPIES OF THIS PLAN SHEET.

TTLB TEMPLATE REVISION DATE: 02/2013
SHEET ISSUE DATE: 01 January, 2000
FILE PATH:

REVISION DATES (DESIGN STAGE ONLY)

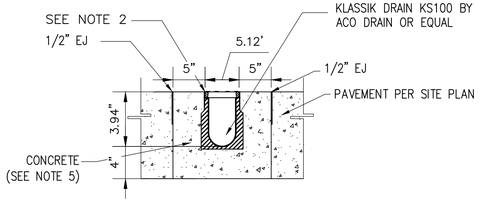

CROSS SECTION

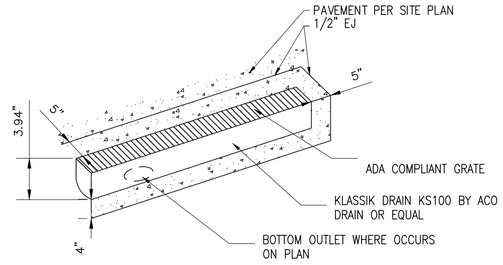

LONGITUDINAL SECTION

NOTES:

1. GRATE MUST COMPLY WITH ADA REQUIREMENTS, HEEL PROOF, WHEELCHAIR PROOF, AND BIKE PROOF.
2. TOP OF GRATE SHALL BE 1/8" BELOW THE FINISH LEVEL OF THE ADJACENT CONCRETE.
3. REFER TO ACO'S LATEST INSTALLATION INSTRUCTION FOR COMPLETE DETAILS.
4. INSTALLATION OF THE SYSTEM PER MANUFACTURER RECOMMENDATION AND IINSTRUCTION.
5. A MINIMUM CONCRETE STRENGTH OF 25 MPA IS RECOMMENDED. THE CONCRETE SHOULD BE VIBRATED TO ELIMINATE AIR POCKETS.

1 TRENCH DRAIN
SCALE: NOT TO SCALE

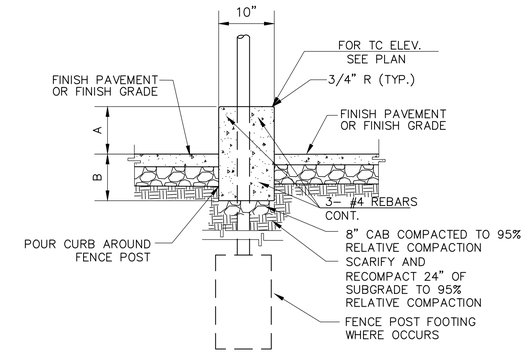

NOTES:

1. PROVIDE 1/4" EXPANSION JOINT WITH PREFORMED JOINT FILLER AT ALL ANGLE POINTS AND THE BEGINNING AND END OF ALL CURVES.
2. CONCRETE, fc'=3,500 psi @ 28 DAYS. REBARS, fy=60,000 psi ASTM A615.
3. PROVIDE CONTRACTION JOINTS CONSISTING OF ONE INCH DEEP CUT SCORES AT 10' O.C. MAX.
4. WHERE A WALK IS ADJACENT TO THE CURB, THE JOINTS SHALL LINE WITH JOINTS IN THE WALK.
5. TERMINATE REBARS 1/2" FROM EXPANSION JOINT.
6. a. WHEN "A" IS LESS THAN 6", B=6"
   b. WHEN "A" IS GREATER THAN 6" AND LESS THAN 12", A=B.
   c. WHEN "A" IS GREATER THAN 12" AND LESS THAN 18", B=18".
7. WHEN THE SUM OF "A" PLUS "B" IS GREATER THAN 18" PLYWOOD FORM IS REQUIRED.

2 FENCE POST IN CURB DETAL
SCALE: NOT TO SCALE

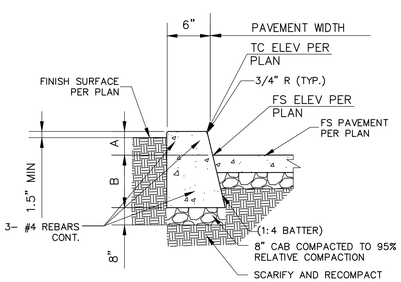

NOTES:

1. PROVIDE 1/4" EXPANSION JOINT WITH PREFORMED JOINT FILLER AT ALL ANGLE POINTS AND THE BEGINNING AND END OF ALL CURVES.
2. CONCRETE, fc'=3,500 psi @ 28 DAYS. REBARS, fy=60,000 psi ASTM A615.
3. PROVIDE CONTRACTION JOINTS CONSISTING OF ONE INCH DEEP CUT SCORES AT 10' O.C. MAX.
4. WHERE A WALK IS ADJACENT TO THE CURB, THE JOINTS SHALL LINE WITH JOINTS IN THE WALK.
5. TERMINATE REBARS 1/2" FROM EXPANSION JOINT.
6. a. WHEN "A" IS ≤ 6", B=6"
   b. WHEN "A" IS 6" < OR ≥ 12", A=B.
   c. WHEN "A" IS 12" < OR ≥ 18", B=18".
7. WHEN THE SUM OF "A" PLUS "B" IS GREATER THAN 18" PLYWOOD FORM IS REQUIRED.

3 CONCRETE CURB DETAIL
SCALE: NOT TO SCALE

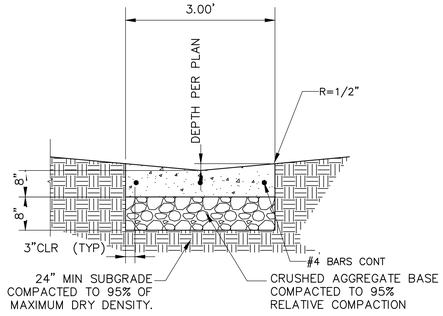

NOTES:

1. PROVIDE 1–1/2" SAW CUT JOINTS AT 10' O.C. MAX.
2. WHERE A GUTTER IS ADJACENT TO THE CURB, THE JOINTS SHALL LINE WITH JOINTS IN THE WALK.
3. CONCRETE, fc'=3,500 psi @ 28 DAYS. REBARS, fy=60,000 psi ASTM A615.

4 V GUTTER DETAIL
SCALE: NOT TO SCALE

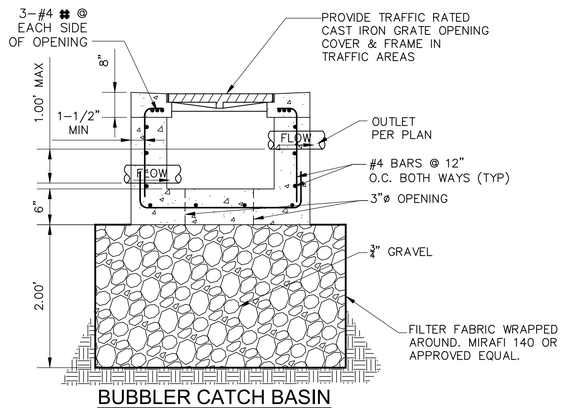

BUBBLER CATCH BASIN

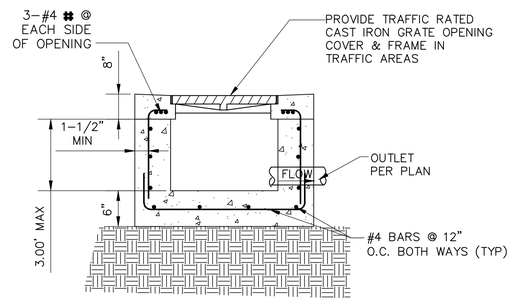

CATCH BASIN

NOTES:

1. USE 3/4" DIA. PIPE BAR SPACERS ASSEMBLED ON (2) 1/2" DIA. RODS WITH THREADS AND NUTS AT BOTH ENDS.
2. ALL METAL PARTS SHALL BE GALVANIZED AFTER FABRICATION AND WELDING, AND BEFORE ASSEMBLING.
3. FRAME AND GRATE SHALL BE SIMILAR TO ALHAMBRA FOUNDRY CO. LTD. SERIES MODEL NO. 1583 OR BROOKS PRODUCTS, INC. OR APPROVED EQUAL. GRATES MUST COMPLY WITH ALL A.D.A. REQUIREMENTS.
4. GRATES SHALL BE OF VANDAL–RESISTANT CONSTRUCTION WITH ½" MAX OPENINGS.
5. FRAME AND GRATE SHALL BE TRAFFIC–RATED WHEN INSTALLED IN PAVED (ASPHALT OR CONCRETE) AREAS.
6. GRATE MUST COMPLY WITH A.D.A. REQUIREMENTS.
7. PROVIDE 1/2" MAX GRID/OPENINGS IN GRATING IN THE DIRECTION OF TRAFFIC FLOW.
8. PROVIDE LABEL "WITH NO DUMPING – DRAINS TO OCEAN" AT ALL DRAINAGE INLETS (I.E. CATCH BASINS, TRENCH DRAINS). NO DUMPING STENCIL PER DETAIL 3 ON THIS SHEET C5.02.

5 CATCH BASIN DETAILS
SCALE: NOT TO SCALE

BUREAU OF ENGINEERING
OFFICIAL RECORD

REGISTERED PROFESSIONAL ENGINEER
PERFILIO C. AOANAN
No. C36079
Exp. 6/30/20
CIVIL
STATE OF CALIFORNIA

BUREAU OF ENGINEERING
ENGINEERING
CITY OF LOS ANGELES

NO.	REVISION DESCRIPTION	DATE	BY

BUILDING NO. -
INDEX NO. RP-300118

DEPARTMENT OF PUBLIC WORKS
CITY OF LOS ANGELES

GARY LEE MOORE, PE, ENV SP
CITY ENGINEER

ARCHITECTURAL DIVISION
ARCHITECT/ENGINEER: VIRGILIO AOANAN LIC. NO: C36079
DESIGNED BY: VIRGILIO AOANAN
DRAWN BY: AUTUMN WAGGONER
CHECKED BY: VIRGILIO AOANAN
APPROVED BY: VIRGILIO AOANAN

DATE:	03/03/2020	03/03/2020	03/03/2020	03/03/2020	03/03/2020

VERTICAL CONTROL:
HORIZONTAL CONTROL:
SHEET TITLE: MISCELLANEOUS DETAILS
PROJECT: GRANADA HILLS POOL AND BATHHOUSE REPLACEMENT PROJECT
ADDRESS: 16730 CHATSWORTH STREET GRANADA HILLS, CA 91344

BID SET
PROJECT ISSUE DATE: 06/22/21

WORK ORDER NO. #E170517
PLAN FILE NO. #308
DRAWING NO. C502
SHEET 13 OF SHEETS 19

PLOTTED:09/18/2019 1:00:00 PM

CA ENGINEERS, INC.
Civil & Structural Engineering
16415 Gothard Street, Suite 210, Huntington Beach, CA 92647
Tel: 714.848.4848 Fax: 714.848.4844

THE CITY OF LOS ANGELES OR ITS OFFICERS OR AGENTS SHALL NOT BE RESPONSIBLE FOR THE ACCURACY OR COMPLETENESS OF ELECTRONIC COPIES OF THIS PLAN SHEET.

TTLB TEMPLATE REVISION DATE: 02/2013
SHEET ISSUE DATE: 01 January, 2000
FILE PATH:
REVISION DATES (DESIGN STAGE ONLY)

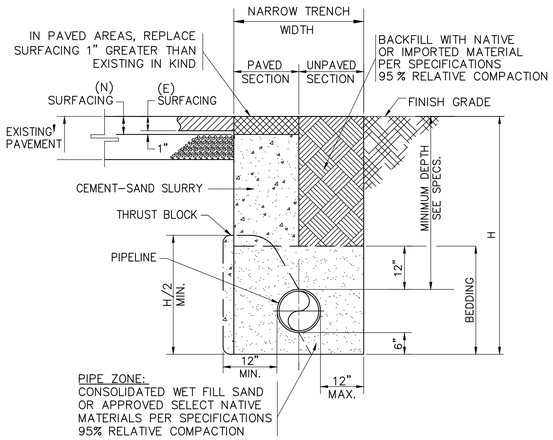

NARROW UNSUPPORTED VERTICAL WALLED TRENCH WIDTH

NOMINALPIPE DIAMETER (INCHES)	NARROW TRENCH WIDTH MIN. (INCHES)
3	18
4	18
6	18
8	24
10	30
12	36
15	39
18	42
21	45
24	48

NOTES:

1. PAVEMENT FINISH SURFACE SHALL BE A SMOOTH CONTINUATION OF ADJOINING PAVED SURFACE.
2. PIPELINE BEDDING MATERIAL, TRENCH BACKFILL MATERIAL, AND COMPACTION SHALL COMPLY WITH THE SOIL REPORT.
3. BEDDING MATERIALS CONSISTING OF SAND, GRAVEL, OR CMB SHOULD BE USED TO BACKFILL AROUND UTILITY PIPES TO APPROXIMATELY ONE FOOT ABOVE THE TOP OF THE PIPE. ONSITE SOILS WHICH HAVE A SAND EQUIVALENT (SE) OF 30 OR GREATER CAN ALSO BE USED AS BEDDING MATERIAL. NO MORE THAN 30% OF BACKFILL VOLUME SHOULD BE LARGER THAN ¾". PRIOR TO PLACING THE PIPES, THE PIPE TRENCH SUBGRADE SHOULD BE OBSERVED BY A REPRESENTATIVE OF THE PROJECT GEOTECHNICAL ENGINEER. IN THE LARGEST DIMENSION. IMPORTED BACKFILL SHOULD BE APPROVED BY PROJECT GEOTECHNICAL CONSULTANT PRIOR TO DELIVERY AT THE SITE.
4. IT IS RECOMMENDED THAT UTILITY TRENCHES ARE NOT BE OR PLACED PARALLED TO AND BELOW A 1½:1 PLANE PROJECTED DOWN FROM THE BASE OF THE OUTER EDGE OF A CONVENTIONAL FOUNDATION.
5. IF THE EXPOSED SUBGRADE IS LOOSE OR UNSTABLE, THE UNSUITABLE SUBGRADE SOIL MUST BE EXCAVATED AND REPLACED WITH BEDDING MATERIAL. BEDDING MUST BE PLACED UNIFORMLY ON EACH SIDE OF THE PIPE AND MECHANICALLY COMPACTED.
6. FLOODING OR JETTING TO DENSIFY THE BEDDING MATERIALS IS NOT ALLOWED DUE TO THE CLAYEY NATURE OF ONSITE SOILS.
7. THE BACKFILL FOR THE REMAINING PORTION OF THE TRENCH ABOVE THE PIPES SHOULD BE PLACED IN LOOSE LIFTS NOT TO EXCEED 8 INCHES, MOISTURE-CONDITIONED WITHIN OPTIMUM AND 2 PERCENT ABOVE OPTIMUM MOISTURE CONTENT, AND MECHANICALLY COMPACTED TO AT LEAST 95 PERCENT RELATIVE COMPACTION IN ACCORDANCE WITH ASTM D1557. THINNER LIFTS MAY BE NECESSARY TO ACHIEVE THE RECOMMENDED LEVEL OF COMPACTION OF THE BACKFILL DUE TO EQUIPMENT LIMITATIONS.
8. THE HIGHER COMPACTION IS REQUIRED FOR FILL MATERIAL THAT HAS LESS THAN FIFTEEN PERCENT (15%) OF THE MATERIAL FINER THAN 0.005MM.
9. TRENCHES IN PAVEMENT AREAS SHOULD BE CAPPED WITH AT LEAST 12 INCHES OF COMPACTED, ON-SITE SOIL SIMILAR TO THAT OF THE ADJOINING SUBGRADE. THE UPPER 12 INCHES OF TRENCH BACKFILL IN AREAS TO BE
10. PAVED SHOULD BE COMPACTED TO AT LEAST 95 PERCENT RELATIVE COMPACTION. SPECIAL CARE SHOULD BETAKEN IN THE CONTROL OF UTILITY TRENCH BACKFILLING IN THE PAVEMENT AREAS.
11. PIPELINE BEDDING MAY BE LEAN CONCRETE CONSISTING OF TWO SACKS OF PORTLAND CEMENT PER CUBIC YARD OF SLURRY IN LEIU OF SAND AS LONG AS SLURRY IS VIBRATED IN PLACE.
12. MINIMUM COVERAGE OF UTILITIES IS 36-INCHES. IF THIS CANNOT BE ATTAINED, CAP WITH 1-SACK CONCRETE SLURRY. IN PAVING AREAS, BACKFILL TRENCHES WITH SLURRY UP TO BOTTOM OF PAVING. IN LANDSCAPE AREAS, SLURRY IS ALLOWED UP TO TWO-FEET BELOW GRADE.
13. PROVIDE METALLIC WARNING TAPE 12-INCHES BELOW GRADE ABOVE UTILITIES.

1 BEDDING DETAIL
SCALE: NOT TO SCALE



NOTES:

1. PROVIDE 8" MIN DIAMETER FOR STENCIL.
2. STENCIL IN BLUE PAINT NEAR ALL CATCH BASIN DRAINS TO READ "NO DUMPING, DRAINS TO OCEAN" L.A.M.C 64.70.
3. STENCILS MAY BE PURCHASED AT
   F.J. SMITH SALES CO.
   6815 E. WASHINGTON BLVD.
   COMMERCE, CA 90040
   PHONE-(323) 728-0227
   FAX -(323) 728-2443
   http://www.fjsmith.com/contact.html

2 NO DUMPING STENCIL
SCALE: NOT TO SCALE

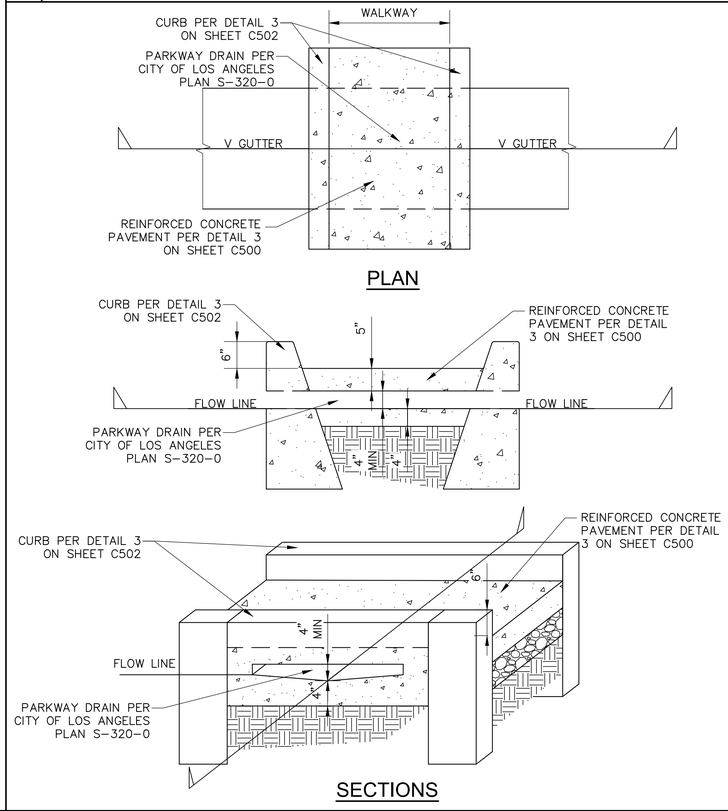

4 ENLARGED PARKWAY DRAIN CURB DETAIL
SCALE: NOT TO SCALE

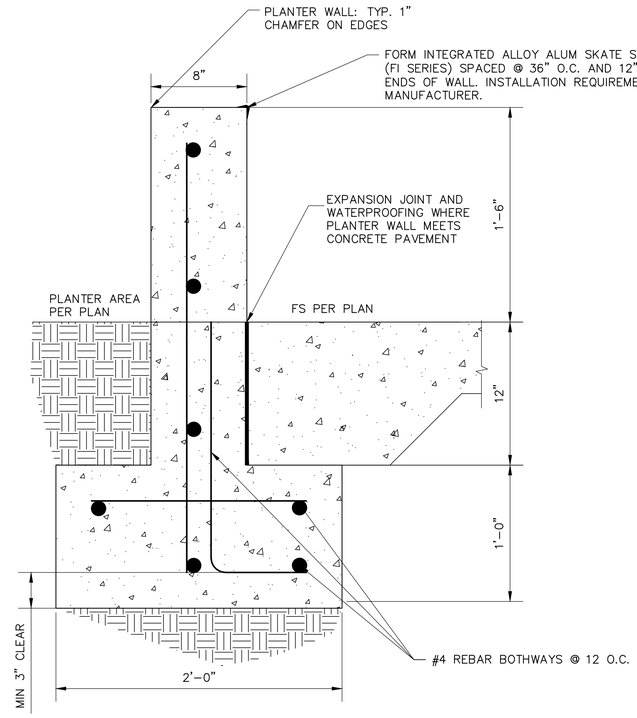

3 LOW PLANTER WALL DETAIL
SCALE: NOT TO SCALE

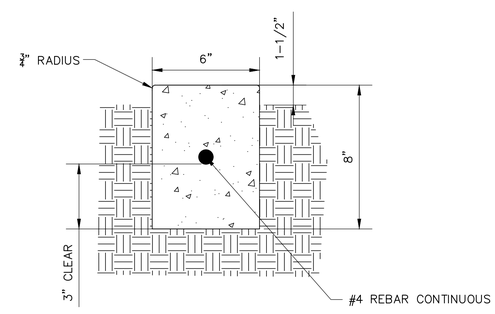

5 MOWSTRIP DETAIL
SCALE: NOT TO SCALE

BUREAU OF ENGINEERING
OFFICIAL RECORD

THE CITY OF LOS ANGELES OR ITS OFFICERS OR AGENTS SHALL NOT BE RESPONSIBLE FOR THE ACCURACY OR COMPLETENESS OF ELECTRONIC COPIES OF THIS PLAN SHEET.

TTLB TEMPLATE REVISION DATE: 02/2013
SHEET ISSUE DATE: 01 January, 2000
FILE PATH: File Path

REVISION DATES (DESIGN STAGE ONLY)

DEPARTMENT OF PUBLIC WORKS
BUREAU OF ENGINEERING
CITY OF LOS ANGELES
ENGINEERING

NO.	REVISION DESCRIPTION	DATE	BY

BUILDING NO. -
INDEX NO. RP-300118

REGISTERED PROFESSIONAL ENGINEER VIRGILIO C. AOANAN No. C36079 Exp. 6/30/20 CIVIL STATE OF CALIFORNIA

CITY ENGINEER	DATE:
VERTICAL CONTROL:	03/03/2020
HORIZONTAL CONTROL:	03/03/2020
	03/03/2020
	03/03/2020

GARY LEE MOORE, PE, ENV SP
CITY ENGINEER
ARCHITECTURAL DIVISION

ARCHITECT/ENGINEER: VIRGILIO AOANAN LIC. NO. C36079
DESIGNED BY: VIRGILIO AOANAN
DRAWN BY: AUTUMN WAGGONER
CHECKED BY: VIRGILIO AOANAN
APPROVED BY: VIRGILIO AOANAN

MCA ENGINEERS INC.
MCA ENGINEERS INC. 1641 S. Garfield Avenue, Suite 210, Alhambra, CA 91801 Tel: 626.289.0800 Fax: 626.289.0807

BID SET
PROJECT ISSUE DATE: 06/22/21

SHEET TITLE: MISCELLANEOUS DETAILS
PROJECT: GRANADA HILLS POOL AND BATHHOUSE REPLACEMENT PROJECT
ADDRESS: 16730 CHATSWORTH STREET GRANADA HILLS, CA 91344

WORK ORDER NO. #E170517
PLAN FILE NO. #308
DRAWING NO. C503
SHEET 14 OF SHEETS 19

PLOTTED:09/18/2019 1:00:00 PM

PROJECT INFORMATION	
ENGINEERED PRODUCT MANAGER:	TERENCE ZHAO 626-425-2874 TERENCE.ZHAO@ADS-PIPE.COM
ADS SALES REP:	ROHIT CHANDER 909-203-2201 ROHIT.CHANDER@ADS-PIPE.COM
PROJECT NO:	S167523

ADVANCED DRAINAGE SYSTEMS, INC.

SiteASSIST by StormTech
FOR STORMTECH INSTRUCTIONS, DOWNLOAD THE INSTALLATION APP

GRANADA HILLS POOL AND BATHHOUSE REPLACEMENT

LOS ANGELES, CA

MC-4500 STORMTECH CHAMBER SPECIFICATIONS

1. CHAMBERS SHALL BE STORMTECH MC-4500.
2. CHAMBERS SHALL BE ARCH-SHAPED AND SHALL BE MANUFACTURED FROM VIRGIN, IMPACT-MODIFIED POLYPROPYLENE COPOLYMERS.
3. CHAMBERS SHALL MEET THE REQUIREMENTS OF ASTM F2418-16a, "STANDARD SPECIFICATION FOR POLYPROPYLENE (PP) CORRUGATED WALL STORMWATER COLLECTION CHAMBERS" CHAMBER CLASSIFICATION 60x101.
4. CHAMBER ROWS SHALL PROVIDE CONTINUOUS, UNOBSTRUCTED INTERNAL SPACE WITH NO INTERNAL SUPPORTS THAT WOULD IMPEDE FLOW OR LIMIT ACCESS FOR INSPECTION.
5. THE STRUCTURAL DESIGN OF THE CHAMBERS, THE STRUCTURAL BACKFILL, AND THE INSTALLATION REQUIREMENTS SHALL ENSURE THAT THE LOAD FACTORS SPECIFIED IN THE AASHTO LRFD BRIDGE DESIGN SPECIFICATIONS, SECTION 12.12, ARE MET FOR: 1) LONG-DURATION DEAD LOADS AND 2) SHORT-DURATION LIVE LOADS, BASED ON THE AASHTO DESIGN TRUCK WITH CONSIDERATION FOR IMPACT AND MULTIPLE VEHICLE PRESENCES.
6. CHAMBERS SHALL BE DESIGNED, TESTED AND ALLOWABLE LOAD CONFIGURATIONS DETERMINED IN ACCORDANCE WITH ASTM F2787, "STANDARD PRACTICE FOR STRUCTURAL DESIGN OF THERMOPLASTIC CORRUGATED WALL STORMWATER COLLECTION CHAMBERS". LOAD CONFIGURATIONS SHALL INCLUDE: 1) INSTANTANEOUS (<1 MIN) AASHTO DESIGN TRUCK LIVE LOAD ON MINIMUM COVER 2) MAXIMUM PERMANENT (75-YR) COVER LOAD AND 3) ALLOWABLE COVER WITH PARKED (1-WEEK) AASHTO DESIGN TRUCK.
7. REQUIREMENTS FOR HANDLING AND INSTALLATION:
   - TO MAINTAIN THE WIDTH OF CHAMBERS DURING SHIPPING AND HANDLING, CHAMBERS SHALL HAVE INTEGRAL, INTERLOCKING STACKING LUGS.
   - TO ENSURE A SECURE JOINT DURING INSTALLATION AND BACKFILL, THE HEIGHT OF THE CHAMBER JOINT SHALL NOT BE LESS THAN 3".
   - TO ENSURE THE INTEGRITY OF THE ARCH SHAPE DURING INSTALLATION, a) THE ARCH STIFFNESS CONSTANT AS DEFINED IN SECTION 6.2.8 OF ASTM F2418 SHALL BE GREATER THAN OR EQUAL TO 900 LBS/IN/IN, AND b) TO RESIST CHAMBER DEFORMATION DURING INSTALLATION AT ELEVATED TEMPERATURES (ABOVE 73° F / 23° C), CHAMBERS SHALL BE PRODUCED FROM REFLECTIVE GOLD OR YELLOW COLORS.
8. ONLY CHAMBERS THAT ARE APPROVED BY THE SITE DESIGN ENGINEER WILL BE ALLOWED. UPON REQUEST BY THE SITE DESIGN ENGINEER OR OWNER, THE CHAMBER MANUFACTURER SHALL SUBMIT A STRUCTURAL EVALUATION FOR APPROVAL BEFORE DELIVERING CHAMBERS TO THE PROJECT SITE AS FOLLOWS:
   - THE STRUCTURAL EVALUATION SHALL BE SEALED BY A REGISTERED PROFESSIONAL ENGINEER.
   - THE STRUCTURAL EVALUATION SHALL DEMONSTRATE THAT THE SAFETY FACTORS ARE GREATER THAN OR EQUAL TO 1.95 FOR DEAD LOAD AND 1.75 FOR LIVE LOAD, THE MINIMUM REQUIRED BY ASTM F2787 AND BY SECTIONS 3 AND 12.12 OF THE AASHTO LRFD BRIDGE DESIGN SPECIFICATIONS FOR THERMOPLASTIC PIPE.
   - THE TEST DERIVED CREEP MODULUS AS SPECIFIED IN ASTM F2418 SHALL BE USED FOR PERMANENT DEAD LOAD DESIGN EXCEPT THAT IT SHALL BE THE 75-YEAR MODULUS USED FOR DESIGN.
9. CHAMBERS AND END CAPS SHALL BE PRODUCED AT AN ISO 9001 CERTIFIED MANUFACTURING FACILITY.

IMPORTANT - NOTES FOR THE BIDDING AND INSTALLATION OF MC-4500 CHAMBER SYSTEM

1. STORMTECH MC-4500 CHAMBERS SHALL NOT BE INSTALLED UNTIL THE MANUFACTURER'S REPRESENTATIVE HAS COMPLETED A PRE-CONSTRUCTION MEETING WITH THE INSTALLERS.
2. STORMTECH MC-4500 CHAMBERS SHALL BE INSTALLED IN ACCORDANCE WITH THE "STORMTECH MC-3500/MC-4500 CONSTRUCTION GUIDE".
3. CHAMBERS ARE NOT TO BE BACKFILLED WITH A DOZER OR EXCAVATOR SITUATED OVER THE CHAMBERS. STORMTECH RECOMMENDS 3 BACKFILL METHODS:
   - STONESHOOTER LOCATED OFF THE CHAMBER BED.
   - BACKFILL AS ROWS ARE BUILT USING AN EXCAVATOR ON THE FOUNDATION STONE OR SUBGRADE.
   - BACKFILL FROM OUTSIDE THE EXCAVATION USING A LONG BOOM HOE OR EXCAVATOR.
4. THE FOUNDATION STONE SHALL BE LEVELED AND COMPACTED PRIOR TO PLACING CHAMBERS.
5. JOINTS BETWEEN CHAMBERS SHALL BE PROPERLY SEATED PRIOR TO PLACING STONE.
6. MAINTAIN MINIMUM 9" (230 mm) SPACING BETWEEN THE CHAMBER ROWS.
7. INLET AND OUTLET MANIFOLDS MUST BE INSERTED A MINIMUM OF 12" (300 mm) INTO CHAMBER END CAPS.
8. EMBEDMENT STONE SURROUNDING CHAMBERS MUST BE A CLEAN, CRUSHED, ANGULAR STONE MEETING THE AASHTO M43 DESIGNATION OF #3 OR #4.
9. STONE SHALL BE BROUGHT UP EVENLY AROUND CHAMBERS SO AS NOT TO DISTORT THE CHAMBER SHAPE. STONE DEPTHS SHOULD NEVER DIFFER BY MORE THAN 12" (300 mm) BETWEEN ADJACENT CHAMBER ROWS.
10. STONE MUST BE PLACED ON THE TOP CENTER OF THE CHAMBER TO ANCHOR THE CHAMBERS IN PLACE AND PRESERVE ROW SPACING.
11. THE CONTRACTOR MUST REPORT ANY DISCREPANCIES WITH CHAMBER FOUNDATION MATERIAL BEARING CAPACITIES TO THE SITE DESIGN ENGINEER.
12. ADS RECOMMENDS THE USE OF "FLEXSTORM CATCH IT" INSERTS DURING CONSTRUCTION FOR ALL INLETS TO PROTECT THE SUBSURFACE STORMWATER MANAGEMENT SYSTEM FROM CONSTRUCTION SITE RUNOFF.

NOTES FOR CONSTRUCTION EQUIPMENT

1. STORMTECH MC-4500 CHAMBERS SHALL BE INSTALLED IN ACCORDANCE WITH THE "STORMTECH MC-3500/MC-4500 CONSTRUCTION GUIDE".
2. THE USE OF EQUIPMENT OVER MC-4500 CHAMBERS IS LIMITED:
   - NO EQUIPMENT IS ALLOWED ON BARE CHAMBERS.
   - NO RUBBER TIRED LOADER, DUMP TRUCK, OR EXCAVATORS ARE ALLOWED UNTIL PROPER FILL DEPTHS ARE REACHED IN ACCORDANCE WITH THE "STORMTECH MC-3500/MC-4500 CONSTRUCTION GUIDE".
   - WEIGHT LIMITS FOR CONSTRUCTION EQUIPMENT CAN BE FOUND IN THE "STORMTECH MC-3500/MC-4500 CONSTRUCTION GUIDE".
3. FULL 36" (900 mm) OF STABILIZED COVER MATERIALS OVER THE CHAMBERS IS REQUIRED FOR DUMP TRUCK TRAVEL OR DUMPING.

USE OF A DOZER TO PUSH EMBEDMENT STONE BETWEEN THE ROWS OF CHAMBERS MAY CAUSE DAMAGE TO CHAMBERS AND IS NOT AN ACCEPTABLE BACKFILL METHOD. ANY CHAMBERS DAMAGED BY USING THE "DUMP AND PUSH" METHOD ARE NOT COVERED UNDER THE STORMTECH STANDARD WARRANTY.

CONTACT STORMTECH AT 1-888-892-2694 WITH ANY QUESTIONS ON INSTALLATION REQUIREMENTS OR WEIGHT LIMITS FOR CONSTRUCTION EQUIPMENT.

©2017 ADS, INC.

PROPOSED LAYOUT

13	STORMTECH MC-4500 CHAMBERS
2	STORMTECH MC-4500 END CAPS
12	STONE ABOVE (in)
9	STONE BELOW (in)
40	% STONE VOID
2547	**INSTALLED SYSTEM VOLUME (CF) (PERIMETER STONE INCLUDED)**
618	SYSTEM AREA (ft²)
140	SYSTEM PERIMETER (ft)

PROPOSED ELEVATIONS

938.25	MAXIMUM ALLOWABLE GRADE (TOP OF PAVEMENT/UNPAVED)
933.75	MINIMUM ALLOWABLE GRADE (UNPAVED WITH TRAFFIC)
933.25	MINIMUM ALLOWABLE GRADE (UNPAVED NO TRAFFIC)
933.25	MINIMUM ALLOWABLE GRADE (BASE OF FLEXIBLE PAVEMENT)
933.25	MINIMUM ALLOWABLE GRADE (TOP OF RIGID PAVEMENT)
932.25	TOP OF STONE
931.25	TOP OF MC-4500 CHAMBER
926.44	24" ISOLATOR ROW CONNECTION INVERT
926.25	BOTTOM OF MC-4500 CHAMBER
925.50	BOTTOM OF STONE

NOTES

- MANIFOLD SIZE TO BE DETERMINED BY SITE DESIGN ENGINEER. SEE TECHNICAL NOTE 6.32 FOR MANIFOLD SIZING GUIDANCE.
- DUE TO THE ADAPTATION OF THIS CHAMBER SYSTEM TO SPECIFIC SITE AND DESIGN CONSTRAINTS, IT MAY BE NECESSARY TO CUT AND COUPLE ADDITIONAL PIPE TO STANDARD MANIFOLD COMPONENTS IN THE FIELD.
- THE SITE DESIGN ENGINEER MUST REVIEW ELEVATIONS AND IF NECESSARY ADJUST GRADING TO ENSURE THE CHAMBER COVER REQUIREMENTS ARE MET.
- THIS CHAMBER SYSTEM WAS DESIGNED WITHOUT SITE-SPECIFIC INFORMATION ON SOIL CONDITIONS OR BEARING CAPACITY. THE SITE DESIGN ENGINEER IS RESPONSIBLE FOR DETERMINING THE SUITABILITY OF THE SOIL AND PROVIDING THE BEARING CAPACITY OF THE INSITU SOILS. THE BASE STONE DEPTH MAY BE INCREASED OR DECREASED ONCE THIS INFORMATION IS PROVIDED.

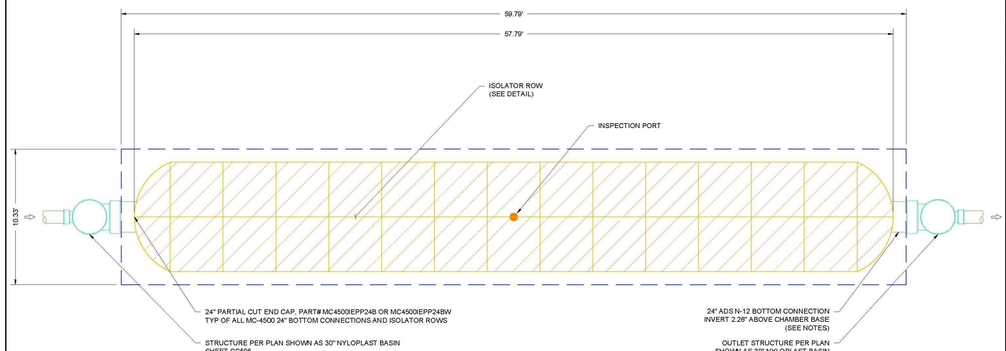

GRANADA HILLS POOL AND BATHHOUSE REPLACEMENT
LOS ANGELES, CA
DATE: 02/04/20 DRAWN: AVM CHECKED: WCM
PROJECT #: S167523
DATE | DRWN | CHKD | DESCRIPTION

StormTech — 70 MAXIMUM RAOL, SUITE 3 | HOOVER HILL | CT | 06897 — 860-529-8188 | 888-892-2694 | WWW.STORMTECH.COM

4640 TRUEMAN BLVD HILLIARD, OH 43026

THIS DRAWING HAS BEEN PREPARED BASED ON STORMTECH PRODUCTS AND INFORMATION PROVIDED BY STORMTECH AT THE TIME THIS DRAWING WAS PREPARED. IT IS THE RESPONSIBILITY OF THE SITE DESIGN ENGINEER TO REVIEW THIS DRAWING AND ALL OTHER DRAWINGS AND CALCULATIONS PREPARED FOR THE PROJECT TO ENSURE THAT ALL APPLICABLE DETAILS ARE ACCURATELY DEPICTED AND ALL ASSUMPTIONS ARE VALID AND APPROPRIATE FOR THE SITE CONDITIONS. IT IS THE RESPONSIBILITY OF THE SITE DESIGN ENGINEER TO REVIEW AND ACCEPT OR REJECT THE STORMTECH PRODUCTS AS SHOWN ON THIS DRAWING.

SHEET 2 OF 6

ACCEPTABLE FILL MATERIALS: STORMTECH MC-4500 CHAMBER SYSTEMS

	MATERIAL LOCATION	DESCRIPTION	AASHTO MATERIAL CLASSIFICATIONS	COMPACTION / DESITY REQUIREMENT
D	**FINAL FILL:** FILL MATERIAL FOR LAYER 'D' STARTS FROM THE TOP OF THE 'C' LAYER TO THE BOTTOM OF FLEXIBLE PAVEMENT OR UNPAVED FINISHED GRADE ABOVE. NOTE THAT PAVEMENT SUBBASE MAY BE PART OF THE 'D' LAYER	ANY SOIL/ROCK MATERIALS, NATIVE SOILS, OR PER ENGINEER'S PLANS. CHECK PLANS FOR PAVEMENT SUBGRADE REQUIREMENTS.	N/A	PREPARE PER SITE DESIGN ENGINEER'S PLANS. PAVED INSTALLATIONS MAY HAVE STRINGENT MATERIAL AND PREPARATION REQUIREMENTS.
C	**INITIAL FILL:** FILL MATERIAL FOR LAYER 'C' STARTS FROM THE TOP OF THE EMBEDMENT STONE ('B' LAYER) TO 24" (600 mm) ABOVE THE TOP OF THE CHAMBER. NOTE THAT PAVEMENT SUBBASE MAY BE A PART OF THE 'C' LAYER.	GRANULAR WELL-GRADED SOIL/AGGREGATE MIXTURES, <35% FINES OR PROCESSED AGGREGATE. MOST PAVEMENT SUBBASE MATERIALS CAN BE USED IN LIEU OF THIS LAYER.	AASHTO M145[4] A-1, A-2-4, A-3 OR AASHTO M43[4] 3, 357, 4, 467, 5, 56, 57, 6, 67, 68, 7, 78, 8, 89, 9, 10	BEGIN COMPACTIONS AFTER 24" (600 mm) OF MATERIAL OVER THE CHAMBERS IS REACHED. COMPACT ADDITIONAL LAYERS IN 12" (300 mm) MAX LIFTS TO A MIN. 95% PROCTOR DENSITY FOR WELL GRADED MATERIAL AND 95% RELATIVE DENSITY FOR PROCESSED AGGREGATE MATERIALS.
B	**EMBEDMENT STONE:** FILL SURROUNDING THE CHAMBERS FROM THE FOUNDATION STONE ('A' LAYER) TO THE 'C' LAYER ABOVE.	CLEAN, CRUSHED, ANGULAR STONE	AASHTO M43[4] 3, 4	NO COMPACTION REQUIRED.
A	**FOUNDATION STONE:** FILL BELOW CHAMBERS FROM THE SUBGRADE UP TO THE FOOT (BOTTOM) OF THE CHAMBER.	CLEAN, CRUSHED, ANGULAR STONE	AASHTO M43[4] 3, 4	PLATE COMPACT OR ROLL TO ACHIEVE A FLAT SURFACE[2,3]

PLEASE NOTE:
1. THE LISTED AASHTO DESIGNATIONS ARE FOR GRADATIONS ONLY. THE STONE MUST ALSO BE CLEAN, CRUSHED, ANGULAR. FOR EXAMPLE, A SPECIFICATION FOR #4 STONE WOULD STATE: "CLEAN, CRUSHED, ANGULAR NO. 4 (AASHTO M43) STONE".
2. STORMTECH COMPACTION REQUIREMENTS ARE MET FOR 'A' LOCATION MATERIALS WHEN PLACED AND COMPACTED IN 9" (230 mm) (MAX) LIFTS USING TWO FULL COVERAGES WITH A VIBRATORY COMPACTOR.
3. WHERE INFILTRATION SURFACES MAY BE COMPROMISED BY COMPACTION, FOR STANDARD DESIGN LOAD CONDITIONS, A FLAT SURFACE MAY BE ACHIEVED BY RAKING OR DRAGGING WITHOUT COMPACTION EQUIPMENT. FOR SPECIAL LOAD DESIGNS, CONTACT STORMTECH FOR COMPACTION REQUIREMENTS.
4. ONCE LAYER 'C' IS PLACED, ANY SOIL/MATERIAL CAN BE PLACED IN LAYER 'D' UP TO THE FINISHED GRADE. MOST PAVEMENT SUBBASE SOILS CAN BE USED TO REPLACE THE MATERIAL REQUIREMENTS OF LAYER 'C' OR 'D' AT THE SITE DESIGN ENGINEER'S DISCRETION.

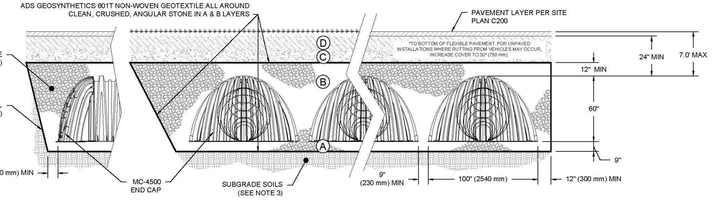

NOTES:

1. CHAMBERS SHALL MEET THE REQUIREMENTS OF ASTM F2418-16a, "STANDARD SPECIFICATION FOR POLYPROPYLENE (PP) CORRUGATED WALL STORMWATER COLLECTION CHAMBERS" CHAMBER CLASSIFICATION 60x101
2. MC-4500 CHAMBERS SHALL BE DESIGNED IN ACCORDANCE WITH ASTM F2787 "STANDARD PRACTICE FOR STRUCTURAL DESIGN OF THERMOPLASTIC CORRUGATED WALL STORMWATER COLLECTION CHAMBERS".
3. THE SITE DESIGN ENGINEER IS RESPONSIBLE FOR ASSESSING THE BEARING RESISTANCE (ALLOWABLE BEARING CAPACITY) OF THE SUBGRADE SOILS AND THE DEPTH OF FOUNDATION STONE WITH CONSIDERATION FOR THE RANGE OF EXPECTED SOIL MOISTURE CONDITIONS.
4. PERIMETER STONE MUST BE EXTENDED HORIZONTALLY TO THE EXCAVATION WALL FOR BOTH VERTICAL AND SLOPED EXCAVATION WALLS.
5. REQUIREMENTS FOR HANDLING AND INSTALLATION:
   - TO MAINTAIN THE WIDTH OF CHAMBERS DURING SHIPPING AND HANDLING, CHAMBERS SHALL HAVE INTEGRAL, INTERLOCKING STACKING LUGS.
   - TO ENSURE A SECURE JOINT DURING INSTALLATION AND BACKFILL, THE HEIGHT OF THE CHAMBER JOINT SHALL NOT BE LESS THAN 3".
   - TO ENSURE THE INTEGRITY OF THE ARCH SHAPE DURING INSTALLATION, a) THE ARCH STIFFNESS CONSTANT AS DEFINED IN SECTION 6.2.8 OF ASTM F2418 SHALL BE GREATER THAN OR EQUAL TO 500 LBS/IN/IN. AND b) TO RESIST CHAMBER DEFORMATION DURING INSTALLATION AT ELEVATED TEMPERATURES (ABOVE 73° F / 23° C), CHAMBERS SHALL BE PRODUCED FROM REFLECTIVE GOLD OR YELLOW COLORS.

GRANADA HILLS POOL AND BATHHOUSE REPLACEMENT
LOS ANGELES, CA
DATE: 02/04/20 DRAWN: AVM CHECKED: WCM
PROJECT #: S167523
DATE | DRWN | CHKD | DESCRIPTION

StormTech — 70 MAXIMUM RAOL, SUITE 3 | HOOVER HILL | CT | 06897 — 860-529-8188 | 888-892-2694 | WWW.STORMTECH.COM

4640 TRUEMAN BLVD HILLIARD, OH 43026

THIS DRAWING HAS BEEN PREPARED BASED ON STORMTECH PRODUCTS AND INFORMATION PROVIDED BY STORMTECH AT THE TIME THIS DRAWING WAS PREPARED. IT IS THE RESPONSIBILITY OF THE SITE DESIGN ENGINEER TO REVIEW THIS DRAWING AND ALL OTHER DRAWINGS AND CALCULATIONS PREPARED FOR THE PROJECT TO ENSURE THAT ALL APPLICABLE DETAILS ARE ACCURATELY DEPICTED AND ALL ASSUMPTIONS ARE VALID AND APPROPRIATE FOR THE SITE CONDITIONS. IT IS THE RESPONSIBILITY OF THE SITE DESIGN ENGINEER TO REVIEW AND ACCEPT OR REJECT THE STORMTECH PRODUCTS AS SHOWN ON THIS DRAWING.

SHEET 3 OF 6

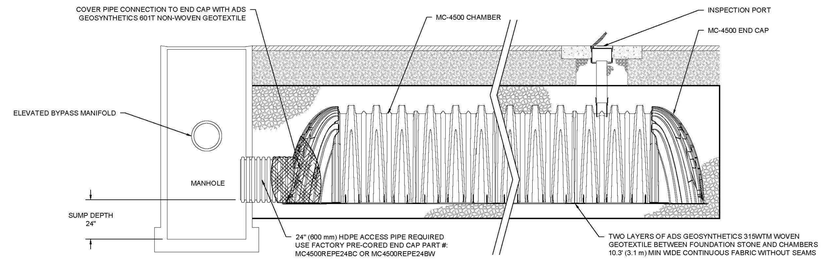

MC-4500 ISOLATOR ROW DETAIL
NTS

INSPECTION & MAINTENANCE

STEP 1) INSPECT ISOLATOR ROW FOR SEDIMENT
- A. INSPECTION PORTS (IF PRESENT)
  - A.1. REMOVE/OPEN LID ON NYLOPLAST INLINE DRAIN
  - A.2. REMOVE AND CLEAN FLEXSTORM FILTER IF INSTALLED
  - A.3. USING A FLASHLIGHT AND STADIA ROD, MEASURE DEPTH OF SEDIMENT AND RECORD ON MAINTENANCE LOG
  - A.4. LOWER A CAMERA INTO ISOLATOR ROW FOR VISUAL INSPECTION OF SEDIMENT LEVELS (OPTIONAL)
  - A.5. IF SEDIMENT IS AT, OR ABOVE, 3" (80 mm) PROCEED TO STEP 2. IF NOT, PROCEED TO STEP 3.
- B. ALL ISOLATOR ROWS
  - B.1. REMOVE COVER FROM STRUCTURE AT UPSTREAM END OF ISOLATOR ROW
  - B.2. USING A FLASHLIGHT, INSPECT DOWN THE ISOLATOR ROW THROUGH OUTLET PIPE
    - i) MIRRORS ON POLES OR CAMERAS MAY BE USED TO AVOID A CONFINED SPACE ENTRY
    - ii) FOLLOW OSHA REGULATIONS FOR CONFINED SPACE ENTRY IF ENTERING MANHOLE
  - B.3. IF SEDIMENT IS AT, OR ABOVE, 3" (80 mm) PROCEED TO STEP 2. IF NOT, PROCEED TO STEP 3.

STEP 2) CLEAN OUT ISOLATOR ROW USING THE JETVAC PROCESS
- A. A FIXED CULVERT CLEANING NOZZLE WITH REAR FACING SPREAD OF 45° (1.1 m) OR MORE IS PREFERRED
- B. APPLY MULTIPLE PASSES OF JETVAC UNTIL BACKFLUSH WATER IS CLEAN
- C. VACUUM STRUCTURE SUMP AS REQUIRED

STEP 3) REPLACE ALL COVERS, GRATES, FILTERS, AND LIDS; RECORD OBSERVATIONS AND ACTIONS.

STEP 4) INSPECT AND CLEAN BASINS AND MANHOLES UPSTREAM OF THE STORMTECH SYSTEM.

NOTES

1. INSPECT EVERY 6 MONTHS DURING THE FIRST YEAR OF OPERATION. ADJUST THE INSPECTION INTERVAL BASED ON PREVIOUS OBSERVATIONS OF SEDIMENT ACCUMULATION AND HIGH WATER ELEVATIONS.
2. CONDUCT JETTING AND VACTORING ANNUALLY OR WHEN INSPECTION SHOWS THAT MAINTENANCE IS NECESSARY.

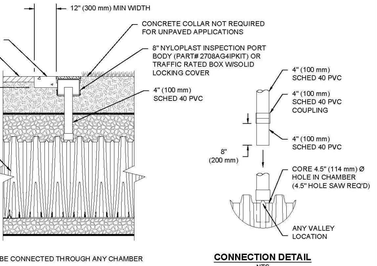

NOTES:
1. INSPECTION PORTS MAY BE CONNECTED THROUGH ANY CHAMBER CORRUGATION VALLEY.
2. ALL SCHEDULE 40 FITTINGS TO BE SOLVENT CEMENTED (4" PVC NOT PROVIDED BY ADS).

CONNECTION DETAIL
NTS

4" PVC INSPECTION PORT DETAIL
NTS

GRANADA HILLS POOL AND BATHHOUSE REPLACEMENT
LOS ANGELES, CA
DATE: 02/04/20 DRAWN: AVM CHECKED: WCM
PROJECT #: S167523
DATE | DRWN | CHKD | DESCRIPTION

StormTech — 70 MAXIMUM RAOL, SUITE 3 | HOOVER HILL | CT | 06897 — 860-529-8188 | 888-892-2694 | WWW.STORMTECH.COM

4640 TRUEMAN BLVD HILLIARD, OH 43026

THIS DRAWING HAS BEEN PREPARED BASED ON STORMTECH PRODUCTS AND INFORMATION PROVIDED BY STORMTECH AT THE TIME THIS DRAWING WAS PREPARED. IT IS THE RESPONSIBILITY OF THE SITE DESIGN ENGINEER TO REVIEW THIS DRAWING AND ALL OTHER DRAWINGS AND CALCULATIONS PREPARED FOR THE PROJECT TO ENSURE THAT ALL APPLICABLE DETAILS ARE ACCURATELY DEPICTED AND ALL ASSUMPTIONS ARE VALID AND APPROPRIATE FOR THE SITE CONDITIONS. IT IS THE RESPONSIBILITY OF THE SITE DESIGN ENGINEER TO REVIEW AND ACCEPT OR REJECT THE STORMTECH PRODUCTS AS SHOWN ON THIS DRAWING.

SHEET 4 OF 6

1 ADS STORMTECH INFILTRATION SYSTEM
SCALE: NOT TO SCALE

BUREAU OF ENGINEERING
OFFICIAL RECORD

CA ENGINEERS, INC.
Civil & Structural
3241 S. Garfield Avenue, Suite 202, Alhambra, CA 91801
(626) 614-1000 Fax (626) 614-1001

BUREAU OF ENGINEERING
CITY OF LOS ANGELES

REVISION DATES (DESIGN STAGE ONLY)

NO.	REVISION DESCRIPTION	DATE	BY

BUILDING NO. -
INDEX NO. RP-300118

REGISTERED PROFESSIONAL ENGINEER — VIRGILIO C. AOANAN — No. C36079 — Exp. 6/30/20 — CIVIL — STATE OF CALIFORNIA

DEPARTMENT OF PUBLIC WORKS
CITY OF LOS ANGELES

GARY LEE MOORE, PE, ENV SP — CITY ENGINEER

	DATE:
ARCHITECT/ENGINEER: VIRGILIO AOANAN LIC. NO. C36079	03/03/2020
DESIGNED BY: VIRGILIO AOANAN	03/03/2020
DRAWN BY: AUTUMN WAGGONER	03/03/2020
CHECKED BY: VIRGILIO AOANAN	03/03/2020
APPROVED BY: VIRGILIO AOANAN	03/03/2020

BID SET
PROJECT ISSUE DATE: 06/22/21

VERTICAL CONTROL:
HORIZONTAL CONTROL:

SHEET TITLE: MISCELLANEOUS DETAILS

PROJECT: GRANADA HILLS POOL AND BATHHOUSE REPLACEMENT PROJECT

ADDRESS: 16730 CHATSWORTH STREET GRANADA HILLS, CA 91344

WORK ORDER NO. #E170517
PLAN FILE NO. #308
DRAWING NO. C504
SHEET 15 OF SHEETS 19

PLOTTED: 09/18/2019 1:00:00 PM

THE CITY OF LOS ANGELES OR ITS OFFICERS OR AGENTS SHALL NOT BE RESPONSIBLE FOR THE ACCURACY OR COMPLETENESS OF ELECTRONIC COPIES OF THIS PLAN SHEET.

TTLB TEMPLATE REVISION DATE: 02/2013
SHEET ISSUE DATE: 01 January, 2000
FILE PATH:

MC-SERIES END CAP INSERTION DETAIL

NTS

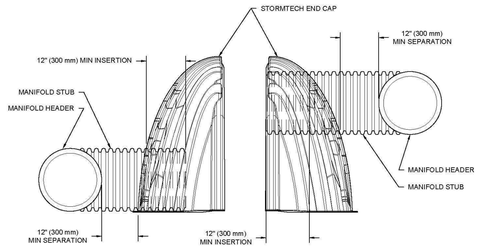

NOTE: MANIFOLD STUB MUST BE LAID HORIZONTAL FOR A PROPER FIT IN END CAP OPENING.

MC-4500 TECHNICAL SPECIFICATION

NTS

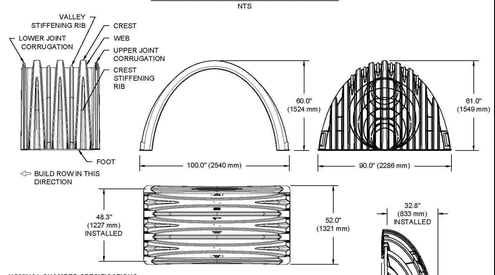

NOMINAL CHAMBER SPECIFICATIONS

SIZE (W X H X INSTALLED LENGTH)	100.0" X 60.0" X 48.3"	(2540 mm X 1524 mm X 1227 mm)
CHAMBER STORAGE	106.5 CUBIC FEET	(3.01 m³)
MINIMUM INSTALLED STORAGE*	162.6 CUBIC FEET	(4.60 m³)
WEIGHT (NOMINAL)	125.0 lbs.	(56.7 kg)

NOMINAL END CAP SPECIFICATIONS

SIZE (W X H X INSTALLED LENGTH)	90.0" X 61.0" X 32.8"	(2286 mm X 1549 mm X 833 mm)
END CAP STORAGE	39.5 CUBIC FEET	(1.12 m³)
MINIMUM INSTALLED STORAGE*	115.3 CUBIC FEET	(3.26 m³)
WEIGHT (NOMINAL)	90 lbs.	(40.8 kg)

*ASSUMES 12" (305 mm) STONE ABOVE, 9" (229 mm) STONE FOUNDATION AND BETWEEN CHAMBERS, 12" (305 mm) STONE PERIMETER IN FRONT OF END CAPS AND 40% STONE POROSITY.

PARTIAL CUT HOLES AT BOTTOM OF END CAP FOR PART NUMBERS ENDING WITH "B"
PARTIAL CUT HOLES AT TOP OF END CAP FOR PART NUMBERS ENDING WITH "T"
END CAPS WITH A PREFABRICATED WELDED STUB END WITH "W"

PART #	STUB	B	C
MC4500IEPP00T	6" (150 mm)	42.54" (1081 mm)	---
MC4500IEPP06B		---	0.86" (22 mm)
MC4500IEPP08T	8" (200 mm)	40.50" (1029 mm)	---
MC4500IEPP08B		---	1.01" (26 mm)
MC4500IEPP10T	10" (250 mm)	38.37" (975 mm)	---
MC4500IEPP10B		---	1.33" (34 mm)
MC4500IEPP12T	12" (300 mm)	36.69" (967 mm)	---
MC4500IEPP12B		---	1.55" (39 mm)
MC4500IEPP15T	15" (375 mm)	32.72" (831 mm)	---
MC4500IEPP15B		---	1.70" (43 mm)
MC4500IEPP18T	18" (450 mm)	29.36" (746 mm)	---
MC4500IEPP18TW		---	1.97" (50 mm)
MC4500IEPP18B			
MC4500IEPP18BW			
MC4500IEPP24T	24" (600 mm)	23.05" (585 mm)	---
MC4500IEPP24TW		---	2.26" (57 mm)
MC4500IEPP24B			
MC4500IEPP24BW			
MC4500IEPP30BW	30" (750 mm)	---	2.95" (75 mm)
MC4500IEPP36BW	36" (900 mm)	---	3.29" (83 mm)
MC4500IEPP42BW	42" (1050 mm)	---	3.55" (90 mm)

NOTE: ALL DIMENSIONS ARE NOMINAL

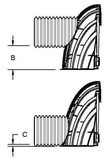

CUSTOM PREFABRICATED INVERTS ARE AVAILABLE UPON REQUEST. INVENTORIED MANIFOLDS INCLUDE 12-24" (300-600 mm) SIZE ON SIZE AND 15-48" (375-1200 mm) ECCENTRIC MANIFOLDS. CUSTOM INVERT LOCATIONS ON THE MC-4500 END CAP CUT IN THE FIELD ARE NOT RECOMMENDED FOR PIPE SIZES GREATER THAN 10" (250 mm). THE INVERT LOCATION IN COLUMN 'B' ARE THE HIGHEST POSSIBLE FOR THE PIPE SIZE.

GRANADA HILLS POOL AND BATHHOUSE REPLACEMENT
LOS ANGELES, CA
DATE: 02/04/20 DRAWN: AVM
PROJECT #: 5187323 CHECKED: WCM

NO.	DESCRIPTION	DRAWN	CHKD

THIS DRAWING HAS BEEN PREPARED BASED ON INFORMATION PROVIDED BY STORMTECH LLC AND IS INTENDED TO BE USED BY PERSONNEL WHO POSSESS ADEQUATE TRAINING AND EXPERIENCE IN THE INSTALLATION OF STORMWATER CHAMBER SYSTEMS. IT IS THE RESPONSIBILITY OF THE SITE DESIGN ENGINEER TO ENSURE THAT THE PROJECT DESIGN AND ALL ASSOCIATED SITE FACTORS MEET ALL APPLICABLE LOCAL REGULATIONS AND MEET THE REQUIREMENTS OF THE SITE DESIGNER.

StormTech
70 INWOOD ROAD, SUITE 3 | ROCKY HILL, CT | 06067
(860) 529-8188 | (888) 892-2694 | www.stormtech.com

ADS
4640 TRUEMAN BLVD
HILLIARD, OH 43026
(800) 821-6710 | www.ads-pipe.com

SHEET 5 OF 6

NYLOPLAST DRAIN BASIN

NTS

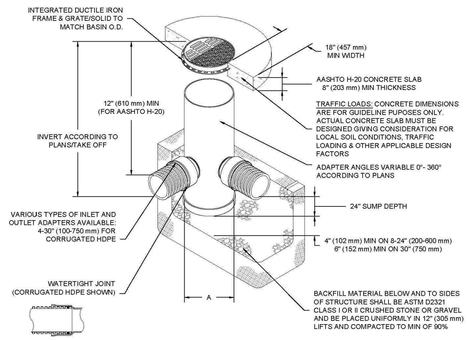

NOTES

1. 8-30" (200-750 mm) GRATES/SOLID COVERS SHALL BE DUCTILE IRON PER ASTM A536 GRADE 70-50-05
2. 12-30" (300-750 mm) FRAMES SHALL BE DUCTILE IRON PER ASTM A536 GRADE 70-50-05
3. DRAIN BASIN TO BE CUSTOM MANUFACTURED ACCORDING TO PLAN DETAILS
4. DRAINAGE CONNECTION STUB JOINT TIGHTNESS SHALL CONFORM TO ASTM D3212 FOR CORRUGATED HDPE (ADS & HANCOR DUAL WALL) & SDR 35 PVC
5. FOR COMPLETE DESIGN AND PRODUCT INFORMATION: **WWW.NYLOPLAST-US.COM**
6. TO ORDER CALL: **800-821-6710**

A	PART #	GRATE/SOLID COVER OPTIONS		
8" (200 mm)	2808AG	PEDESTRIAN LIGHT DUTY	STANDARD LIGHT DUTY	SOLID LIGHT DUTY
10" (250 mm)	2810AG	PEDESTRIAN LIGHT DUTY	STANDARD LIGHT DUTY	SOLID LIGHT DUTY
12" (300 mm)	2812AG	PEDESTRIAN AASHTO H-10	STANDARD AASHTO H-20	SOLID AASHTO H-20
15" (375 mm)	2815AG	PEDESTRIAN AASHTO H-10	STANDARD AASHTO H-20	SOLID AASHTO H-20
18" (450 mm)	2818AG	PEDESTRIAN AASHTO H-10	STANDARD AASHTO H-20	SOLID AASHTO H-20
24" (600 mm)	2824AG	PEDESTRIAN AASHTO H-10	STANDARD AASHTO H-20	SOLID AASHTO H-20
30" (750 mm)	2830AG	PEDESTRIAN AASHTO H-20	STANDARD AASHTO H-20	SOLID AASHTO H-20

GRANADA HILLS POOL AND BATHHOUSE REPLACEMENT
LOS ANGELES, CA
DATE: 02/04/20 DRAWN: AVM
PROJECT #: 5187323 CHECKED: WCM

NO.	DESCRIPTION	DRAWN	CHKD

THIS DRAWING HAS BEEN PREPARED BASED ON INFORMATION PROVIDED BY NYLOPLAST AND IS INTENDED TO BE USED BY PERSONNEL WHO POSSESS ADEQUATE TRAINING AND EXPERIENCE IN THE INSTALLATION OF STORMWATER CHAMBER SYSTEMS. IT IS THE RESPONSIBILITY OF THE SITE DESIGN ENGINEER TO ENSURE THAT THE PROJECT DESIGN AND ALL ASSOCIATED SITE FACTORS MEET ALL APPLICABLE LOCAL REGULATIONS AND MEET THE REQUIREMENTS OF THE SITE DESIGNER.

Nyloplast
3128 VERONA AVE
BUFORD, GA 30519
PHONE (770) 932-2626
FAX (770) 932-2406
www.nyloplast-us.com

ADS
4640 TRUEMAN BLVD
HILLIARD, OH 43026
(800) 821-6710 | www.ads-pipe.com

SHEET 6 OF 6

1 ADS STORMTECH INFILTRATION SYSTEM

SCALE: NOT TO SCALE

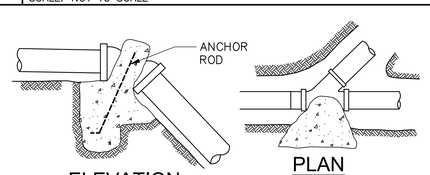

ELEVATION
VERTICAL BEND
(SEE NOTE 5)

PLAN
WYE

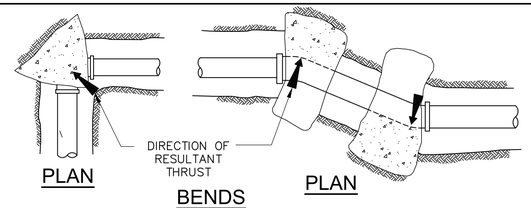

PLAN

BENDS

PLAN

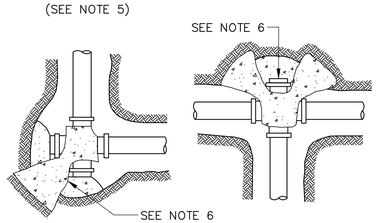

PLAN

PLAN

CROSSES

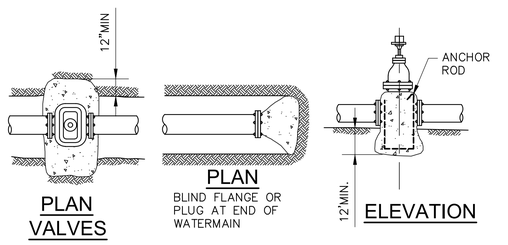

PLAN
VALVES

PLAN
BLIND FLANGE OR PLUG AT END OF WATERMAIN

ELEVATION

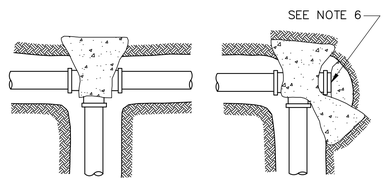

PLAN

PLAN

TEES

TABLE 1

MINIMUM BEARING AREAS IN SQ.FT.				
MAIN SIZE	TEE	90° BEND	45° BEND	22 1/2 BEND
6"	4	4	4	3
8"	5	7	4	3
10"	9	12	6	4
12"	12	16	9	6

BASED ON 150 PSI W.W.R. PRESSURE & SOIL BEARING LOADS OF 2000 PSF
THE RATIO OF WIDTH TO HEIGHT SHALL NOT EXCEED 1 1/2 TO 1

TEES,PLUGS,CAPS & HYDRANTS.

TABLE II

SOIL TYPE	MAX. ALLOWABLE SOIL BEARING VALUES	FACTORS FOR INCREASING AREAS IN TABLE 1
LOOSE SAND	500 PSF	4
SOFT SANDY CLAY	1000 PSF	2
ADOBE	1000 PSF	2
COMPACT FINE SAND	2000 PSF	1
COMPACT COARSE SAND	2000 PSF	1
MEDIUM STIFF CLAY	2000 PSF	1

THE CONTRACTOR SHALL FOLLOW THE RECOMMENDATIONS OF GEOTECHNICAL REPORT FOR DETERMINING THE SAFE SOIL BEARING VALUES AND SIZE OF BEARING AREAS.
BASED ON 2 FEET MINIMUM DEPTH OF COVER OVER THE PIPE.

NOTES:

1. ALL ANCHOR AND THRUST BLOCKS SHALL BEAR AGAINST UNDISTURBED SOIL.
2. MINIMUM ALLOWABLE WATER PRESSURE FOR DESIGN OF THRUST BLOCKS IS 150 PSI. BEARING AREA INCREASE IN PRESSURE.
3. ALL CONCRETE USED IN THRUST BLOCKS SHALL ATTAIN 2000 PSI STRENGTH.
4. ALL ANCHOR RODS SHALL BE REINFORCING STEEL AND A MINIMUM OF 1/2–INCH IN DIAMETER.
5. USE ANCHOR BLOCKS AT VERTICAL BENDS WHEN PIPE IS ABOVE OR BELOW GROUND. SIZE OF BLOCK AND ROD SHALL BE AS SHOWN ON THE PLANS OR AS DETERMINED BY THE ENGINEER IN THE FIELD.
6. USE 30 POUND FELT TO INSURE COLD JOINT.
7. CONCRETE SHALL NOT COME INTO DIRECT WITH ASBESTOS CEMENT PIPE.
8. FOR PIPE 14" IN DIAMETER OR LARGER ENGINEER IS TO SUBMIT CALCULATIONS.

2 THRUST BLOCK

SCALE: NOT TO SCALE

BUREAU OF ENGINEERING
OFFICIAL RECORD

NCA ENGINEERS, INC.
Civil & Environmental Engineering
16415 Golden Avenue, Suite 150, Alvarado, CA 91901
Tel: (619)660-1744 Fax: (619)660-1747

BID SET
PROJECT ISSUE DATE: 06/22/21

CITY OF LOS ANGELES
DEPARTMENT OF PUBLIC WORKS
BUREAU OF ENGINEERING

CITY ENGINEER

DATE:	BY
03/03/2020	
03/03/2020	
03/03/2020	
03/03/2020	
03/03/2020	

GARY LEE MOORE, PE, ENV SP
ARCHITECTURAL DIVISION

ARCHITECT/ENGINEER: VIRGILIO AOANAN LIC. NO: C36079
DESIGNED BY: VIRGILIO AOANAN
DRAWN BY: AUTUMN WAGGONER
CHECKED BY: VIRGILIO AOANAN
APPROVED BY: VIRGILIO AOANAN

VERTICAL CONTROL:
HORIZONTAL CONTROL:

SHEET TITLE: MISCELLANEOUS DETAILS

PROJECT: GRANADA HILLS POOL AND BATHHOUSE REPLACEMENT PROJECT

ADDRESS: 16730 CHATSWORTH STREET GRANADA HILLS, CA 91344

BUILDING NO. -

INDEX NO. RP-300118

REGISTERED PROFESSIONAL ENGINEER
VIRGILIO C. AOANAN
No. C36079
Exp. 6/30/20
CIVIL
STATE OF CALIFORNIA

WORK ORDER NO. #E170517
PLAN FILE NO. #308
DRAWING NO. C505
SHEET 16 OF SHEETS 19

PLOTTED:09/18/2019 1:00:00 PM

THE CITY OF LOS ANGELES OR ITS OFFICERS OR AGENTS SHALL NOT BE RESPONSIBLE FOR THE ACCURACY OR COMPLETENESS OF ELECTRONIC COPIES OF THIS PLAN SHEET.

TTLB TEMPLATE REVISION DATE: 02/2013
SHEET ISSUE DATE: 01 January, 2000
FILE PATH:

REVISION DATES (DESIGN STAGE ONLY)

ULARA
UPPER LOS ANGELES RIVER AREA WATERMASTER
Richard C. Slade - Watermaster

ularawatermaster.com
14951 Burbank Blvd. Suite 300
Sherman Oaks, CA 91401
818-506-0418 PHONE
818-506-1343 FAX

March 10, 2020

Autumn Waggoner
VCA Engineers, Inc.
(Sent via email: Autumn.waggoner@vcaeng.com)

Job No. 500-LAS04

Re: Potential Stormwater Infiltration Project
Proposed Public Property Redevelopment
16730 Chatsworth Street
Granada Hills, California 91344

Dear Ms. Waggoner:

Provided herein is a brief discussion of the information and reports that you have provided our office regarding your plans for the possible infiltration of stormwater that is to be collected and incorporated into the Low Impact Development (LID) improvements for the proposed public property redevelopment project, located within the City of Los Angeles (City), at the address 16730 Chatsworth Street, in the Granada Hills area of the San Fernando Valley. We understand the project, which has an area of ±29,000 square feet, is situated at the southeastern corner of the intersection of Petit Avenue and Chatsworth Street. As such, this redevelopment overlies a portion of the San Fernando Groundwater Basin, the largest of the four groundwater basins in the Superior Court-adjudicated Upper Los Angeles River Area (ULARA). Also provided herein, as ULARA Watermaster, is my opinion regarding the potential impact to local groundwater quality that might result from the proposed infiltration of stormwater that is to be captured by the Low Impact Development (LID) improvements that you have recommended for your project.

In regard to stormwater infiltration, the California Regional Water Quality Control Board – Los Angeles Region (LARWQCB) promulgated its National Pollutant Discharge Elimination System (NPDES) permit process in 1990 to help minimize the impacts of stormwater and urban runoff on the receiving water bodies in its sphere of influence (i.e., the Los Angeles River and the Pacific Ocean). The goal of their NPDES process was to minimize the impacts on the river, and ultimately to the ocean, by reducing the volume and improving the quality of surface water runoff from storm events. Because your proposed redevelopment is located within the ULARA

watershed boundary, all local rainfall and surface water runoff from this site would normally drain into the Los Angeles River and eventually to the ocean.

Several years after the implementation of the NPDES process, the City of Los Angeles, Department of Public Works, Bureau of Sanitation – Watershed Protection Division (LAWPD), promulgated a series of guidelines intended to increase the capture and onsite infiltration of stormwater at all proposed developments and redevelopments throughout the City. These guidelines established the requirements and limitations for utilizing onsite stormwater infiltration and also specified an order of preference (via a set of Best Management Practices—BMPs) for providing LID improvements at each development and/or redevelopment site in the City.

The specific order of the BMP preference list was established by the LAWPD to collect and provide basic "treatment" of onsite stormwater runoff, and to help increase the amount of infiltration (i.e., deep percolation) from the initial ¾-inch of rainfall from each storm event at all new development and redevelopment sites in the City. The end result is intended to reduce the volumes of contaminated stormwater runoff that enter the storm drain system (from each new storm event) and simultaneously help reduce the volume and enhance the quality of the runoff that enters the Los Angeles River and ultimately the Pacific Ocean. Turbidity and potential urban-derived contaminants in the captured runoff could be reduced by the "treatment" effects of the various stormwater infiltration systems proposed via the BMPs. From a hydrogeologic perspective, and in the opinion of this Watermaster, whenever and wherever (with certain exceptions) deep percolation (infiltration) of stormwater can be appropriately enhanced, then recharge to the underlying groundwater reservoir (in this case, the San Fernando Groundwater Basin) can be beneficially increased.

For this proposed redevelopment, you sent the following for Watermaster review:

a. An email, received by the Watermaster's office on February 20, 2020, in response to the Watermaster's Data Request Memorandum. Your email and attachments provided responses to most of the items identified in the Watermaster's Memorandum. Note that a copy of that Data Request Memorandum is being routinely provided by LAWPD personnel to LID applicants upon their initial visit to the LAWPD office in downtown Los Angeles.

b. A set of CAD-type drawings, prepared by VCA Engineers, Inc. (VCA), which contained: a site plan; a grading plan; and a LID plan. The LID plan shows the proposed locations of a couple of catch basins, several slot drains, and an infiltration basin within the boundaries of the project. We understand that these proposed facilities are to be components of your stormwater infiltration system.

c. A soils report, *Geotechnical Engineering Report: Granada Hills Pool Replacement Project*, prepared by the City of Los Angeles, Department of Public Works, Bureau of Engineering, Geotechnical Engineering Group (LAGEO) and dated August 22, 2017. In addition, two supplemental soils reports were also provided, *Supplemental Geotechnical Report: Granada Hills Pool Replacement Project*, and *Supplemental Geotechnical Report No. 2: Granada Hills Pool Replacement Project*. Both of these were prepared by LAGEO and are dated October 25, 2018 and February 18, 2020, respectively. The reports described the earth materials encountered beneath the subject site in six soil borings that were drilled and sampled to a maximum depth of approximately 31.5 feet below ground surface (bgs). It should be noted that groundwater was not encountered during the drilling of these soil borings in June 2017. Infiltration rates for the onsite earth materials were tested to a depth of approximately 10.5 feet bgs in the soil borings drilled for the infiltration test.

Please note that no one from my office conducted a site visit to the subject LID property and that the information presented in this review was provided by the applicant and/or obtained from a cursory review of a few regulatory agency websites and basic sources of referenced information. Among the key items noted during our review of the available documents are the following:

1. The subject property development is situated at the southeastern corner of the intersection of Petit Avenue and Chatsworth Street. A Google Earth Pro® satellite image dated November 19, 2018 shows the subject property was developed with a public park and recreational facilities at that time.
2. The subject property is bordered by residential properties to the east and south, by Petit Avenue to the west, and by Chatsworth Street to the north.
3. A check of the online Geotracker database maintained by the California State Water Resources Control Board (SWRCB) shows that within 1,000 feet of the subject LID project, there are: no "open" leaking underground storage tank (LUST) sites; no "open" California Department of Toxic Substances Control (DTSC) sites; no "open" military cleanup sites, or; no "open" cleanup program sites.
4. As shown in the CAD-type drawings provided by VCA, stormwater will be collected from rainfall that flows as sheet flow across non-permeable paved areas at the property, and from rain that falls directly onto the roof of the proposed redevelopments. The collected stormwater is to be directed to one of several slot drains and/or the catch basins, and thereafter, it will be directed to the infiltration basin (i.e., the infiltration system). Stormwater directed to the infiltration system would reportedly be able to infiltrate into the subsurface (i.e., made available for deep percolation). The proposed infiltration system is to be constructed in the eastern portion of the proposed redevelopment.

It should be noted that the purpose of this LID stormwater infiltration review letter from the Watermaster's office is not in any way to evaluate and/or opine on the technical feasibility of the infiltration of stormwater at the site, but rather only to assess the concept of infiltration (and recharge) at the site strictly in regard to its potential impact on local groundwater quality. Thus, the Watermaster has no opinion regarding the potential for, or the technical feasibility of, the collected stormwater to be infiltrated into the earth materials beneath the subject property.

Further, your eventual LID permit from the LAWPD will require the property owner (and all successors) to provide for ongoing operation and maintenance in perpetuity for all of the onsite LID facilities. The Watermaster considers this issue of ongoing maintenance of your proposed LID facilities to be critical to the long-term protection of the groundwater quality in the San Fernando Basin.

Based on our review of your documents, and assuming that the final stormwater collection system and infiltration systems are constructed as proposed and properly maintained in the future, then the Watermaster has no objection to the infiltration component of your current LID, in relation to the local groundwater quality. If the project and/or your LID and/or your infiltration system is revised in the future and differs from that which has been generally characterized herein, the Watermaster would then need to review those revised plans.

Respectfully submitted,

Richard C. Slade
ULARA Watermaster

1 ULARA APPROVAL
SCALE: NOT TO SCALE

CITY OF LOS ANGELES
CALIFORNIA

BOARD OF BUILDING AND SAFETY COMMISSIONERS
VAN AMBATIELOS, PRESIDENT
JAVIER NUNEZ, VICE PRESIDENT
JOSELYN GEAGA-ROSENTHAL
GEORGE HOVAGUIMIAN
ELVIN W. MOON

ERIC GARCETTI
MAYOR

DEPARTMENT OF BUILDING AND SAFETY
201 NORTH FIGUEROA STREET
LOS ANGELES, CA 90012
FRANK M. BUSH, GENERAL MANAGER, SUPERINTENDENT OF BUILDING
OSAMA YOUNAN, P.E., EXECUTIVE OFFICER

SOILS REPORT APPROVAL LETTER

March 23, 2020

LOG # 112389
SOILS/GEOLOGY FILE - 2

Department of Recreation and Parks
1149 S. Broadway, 8th floor
Los Angeles, Ca 90015

TRACT: SUBDIVISION NO. 1 OF THE PROPERTY OF THE PORTER LAND AND WATER COMPANY (M R 31-3/6)
LOT(S): 2 SEC 18 T2N R15W
LOCATION: 16730 W CHATSWORTH ST

CURRENT REFERENCE REPORT/LETTER(S)	REPORT No.	DATE OF DOCUMENT	PREPARED BY
Addendum Report	17-074	02/18/2020	City of LA-GEO

PREVIOUS REFERENCE REPORT/LETTER(S)	REPORT No.	DATE OF DOCUMENT	PREPARED BY
Dept. Approval Letter	105775	11/14/2018	LADBS
Addendum Report	17-074	10/25/2018	City of LA-GEO
Dept. Approval Letter	100428	11/09/2017	LADBS
Soils Report	17-074	08/22/2017	City of LA-GEO
Laboratory Test Report	A8950-06-12	07/31/2017	Geocon West, Inc.

The Grading Division of the Department of Building and Safety has reviewed the referenced report that provide recommendations for the proposed infiltration system and exterior slab. The Department previously conditionally approved the above referenced reports dated 08/22/2017 and 10/25/2018 for the proposed swimming pool, shade structure, pool equipment building, concrete ramp, a lifeguard room addition, PV panels and security light poles in a letter dated 11/14/2018, Log #105775. Foundation recommendations are provided on page 2 of the 10/25/2018 report.

The referenced reports are acceptable, provided the following conditions are complied with during site development:

(Note: Numbers in parenthesis ( ) refer to applicable sections of the 2020 City of LA Building Code. P/BC numbers refer the applicable Information Bulletin. Information Bulletins can be accessed on the internet at LADBS.ORG.)

1. All conditions of the above referenced Department approval letter(s) shall apply except as specifically modified herein.
2. Slabs placed on approved compacted fill shall be at least 3½ inches thick and shall be reinforced with ½-inch diameter (#4) reinforcing bars spaced a maximum of 16 inches on center each way.

LADBS G-5 (Rev. 12/17/2019) AN EQUAL EMPLOYMENT OPPORTUNITY - AFFIRMATIVE ACTION EMPLOYER

3. Concrete floor slabs placed on expansive soil shall be placed on a 4-inch fill of coarse aggregate or on a moisture barrier membrane. The slabs shall be at least 3½ inches thick and shall be reinforced with ½-inch diameter (#4) reinforcing bars spaced a maximum of 16 inches on center each way.
4. The infiltration facility design and construction shall comply with the minimum requirements specified in the Information Bulletin P/BC 2014-118.
5. The infiltration system shall be constructed at the location shown on the drawing attached to the current report.
6. The construction of the infiltration system shall be provided under the inspection and approval of the soils engineer.
7. An overflow outlet shall be provided to conduct water to the street in the event that the infiltration system capacity is exceeded. (P/BC 2014-118)
8. Approval for the proposed infiltration system from the Bureau of Sanitation, Department of Public Works shall be secured.
9. A minimum distance of 10 feet (in any direction) shall be provided from adjacent proposed/existing footings to the discharge of the proposed infiltration system. A minimum distance of 10 feet horizontally shall be provided from private property lines to the proposed infiltration system.

DAN RYAN EVANGELISTA
Structural Engineering Associate III

Log No. 112389
213-482-0480

cc: City of LA-GEO, Project Consultant
VN District Office

BUREAU OF ENGINEERING
OFFICIAL RECORD

2 SOILS APPROVAL LETTER
SCALE: NOT TO SCALE

THE CITY OF LOS ANGELES OR ITS OFFICERS OR AGENTS SHALL NOT BE RESPONSIBLE FOR THE ACCURACY OR COMPLETENESS OF ELECTRONIC COPIES OF THIS PLAN SHEET.

FILE PATH:
PLOT DATE/TIME:
SHEET ISSUE DATE: 01 January, 2000
REVISION DATES (DESIGN STAGE ONLY)

DEPARTMENT OF PUBLIC WORKS
BUREAU OF ENGINEERING
ENGINEERING
CITY OF LOS ANGELES

NO.	REVISION DESCRIPTION	DATE	BY

BUILDING NO. -
INDEX NO. RP-300118

REGISTERED PROFESSIONAL ENGINEER VIRGILIO C. AOANAN No. C36079 Exp. 6/30/20 CIVIL STATE OF CALIFORNIA

CITY ENGINEER

	DATE:
ARCHITECT/ENGINEER: VIRGILIO AOANAN LIC. NO.: C36079	03/03/2020
DESIGNED BY: VIRGILIO AOANAN	03/03/2020
DRAWN BY: AUTUMN WAGGONER	03/03/2020
CHECKED BY: VIRGILIO AOANAN	03/03/2020
APPROVED BY: VIRGILIO AOANAN	03/03/2020

GARY LEE MOORE, PE, ENV SP
ARCHITECTURAL DIVISION

CITY OF LOS ANGELES
VERTICAL CONTROL:
HORIZONTAL CONTROL:

SHEET TITLE: MISCELLANEOUS DETAILS

PROJECT: GRANADA HILLS POOL AND BATHHOUSE REPLACEMENT PROJECT
ADDRESS: 16730 CHATSWORTH STREET GRANADA HILLS, CA 91344

VCA ENGINEERS, INC.
CIVIL • STRUCTURAL • MECHANICAL • ELECTRICAL
741 S. Glendora Ave., Suite 204, West Covina, CA 91790
Tel: (626)858-8888 Fax: (626)858-8889

BID SET
PROJECT ISSUE DATE: 06/22/21

WORK ORDER NO. #E170517
PLAN FILE NO. #308
DRAWING NO. C506
SHEET 17 OF SHEETS 19

PLOTTED:09/18/2019 1:00:00 PM

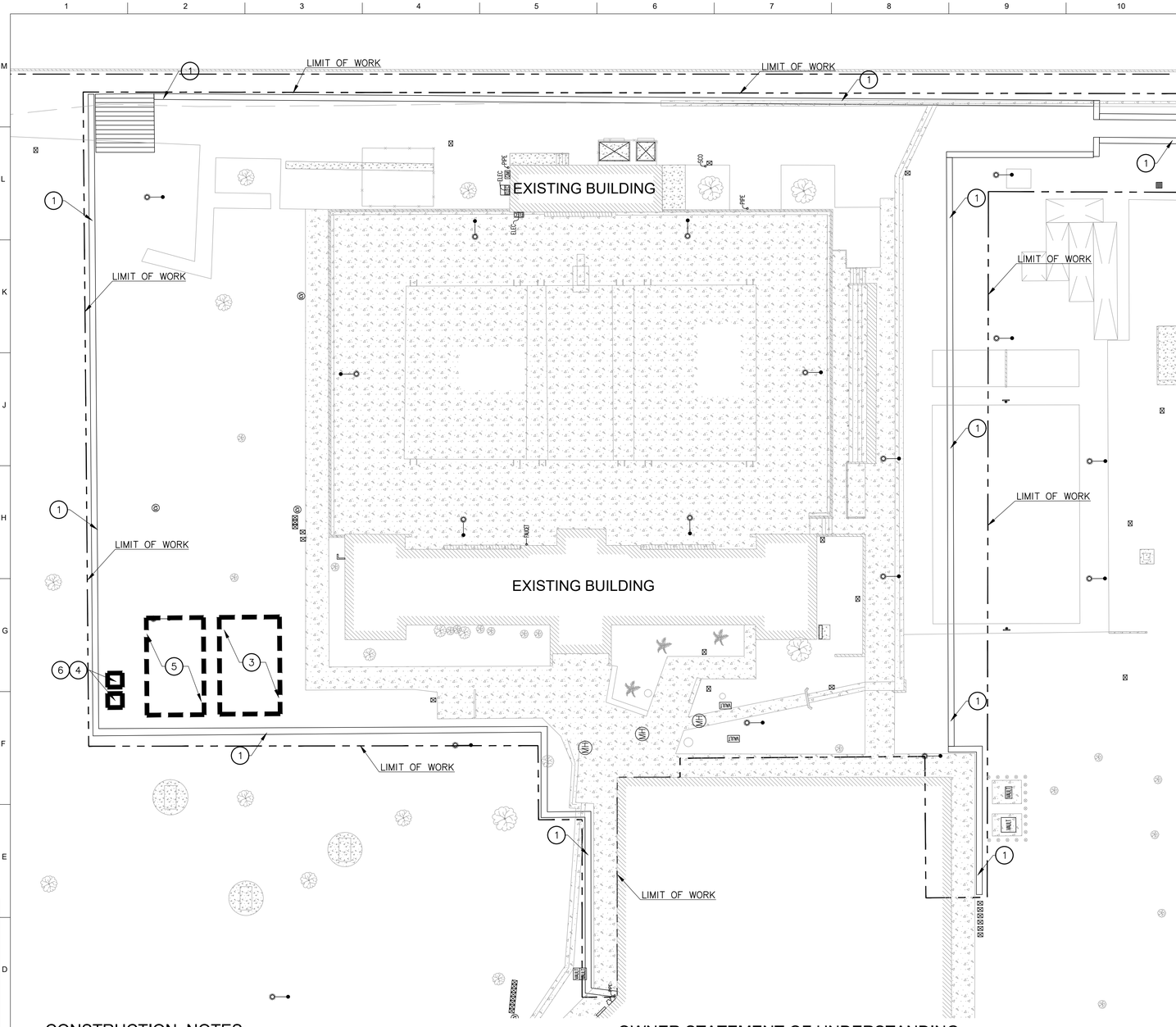

CONSTRUCTION NOTES:

1. INSTALL FIBER ROLLS PER DETAIL 4 ON SHEET C601.
2. INSTALL TEMPORARY STABILIZED CONSTRUCTION ENTRANCE PER DETAIL 6 ON SHEET C601.
3. PROPOSED AREA FOR EQUIPMENT STAGING. CONTRACTOR TO VERIFY EXACT LOCATION AND COORDINATE WITH THE CITY ENGINEER.
4. PROPOSED TRAILER AREA.
5. PROPOSED AREA FOR LOADING. CONTRACTOR TO VERIFY EXACT LOCATION AND COORDINATE WITH THE CITY ENGINEER.
6. PROPOSED AREA FOR PORTABLE TOILETS. CONTRACTOR TO VERIFY EXACT LOCATION AND COORDINATE WITH THE CITY ENGINEER.

OWNER STATEMENT OF UNDERSTANDING:

AS THE ENGINEER/QSD OF RECORD, I HAVE SELECTED APPROPRIATE BMPs TO EFFECTIVELY MINIMIZE THE NEGATIVE IMPACTS OF THIS PROJECT'S CONSTRUCTION ACTIVITIES ON STORM WATER QUALITY. THE PROJECT OWNER AND CONTRACTOR ARE AWARE THAT THE SELECTED BMPs MUST BE INSTALLED, MONITORED, AND MAINTAINED TO ENSURE THEIR EFFECTIVENESS.

_____ _____
CIVIL ENGINEER/QSD SIGNATURE DATE

AS THE PROJECT OWNER OR AUTHORIZED AGENT OF THE OWNER, "I CERTIFY THAT THIS DOCUMENT AND ALL ATTACHMENTS WERE PREPARED UNDER MY DIRECTION OR SUPERVISION IN ACCORDANCE WITH THE SYSTEM DESIGNED TO ENSURE THAT A QUALIFIED PERSONNEL PROPERLY GATHER AND EVALUATE THE INFORMATION SUBMITTED. BASED ON MY INQUIRY OF THE PERSON OR PERSONS WHO MANAGE THE SYSTEM OR THOSE PERSONS DIRECTLY RESPONSIBLE FOR GATHERING THE INFORMATION, TO THE BEST OF MY KNOWLEDGE AND BELIEF, THE INFORMATION SUBMITTED IS TRUE, ACCURATE, AND COMPLETE. I AM AWARE THAT SUBMITTING FALSE AND/ OR INACCURATE INFORMATION, FAILING TO UPDATE THE ESCP TO REFLECT THE CURRENT CONDITIONS, OR FAILING TO PROPERLY AND/OR ADEQUATELY IMPLEMENT THE ESCP MAY RESULT IN REVOCATION OF GRADING AND/OR OTHER PERMITS OR OTHER SANCTIONS PROVIDED BY LAW."

_____ _____
OWNER OR AUTHORIZED REPRESENTATIVE (PERMITEE) DATE

EROSION CONTROL NOTES:

1. IN CASE OF EMERGENCY, CALL 911.
2. TOTAL DISTURBED AREA _____ WDID# _____

   RISK LEVEL 1 2 3 (CIRCLE ONE AS DETERMINED BY STATE GENERAL PERMIT FOR SITES GREATER THAN 1 ACRE)
3. A STAND–BY CREW FOR EMERGENCY WORK SHALL BE AVAILABLE AT ALL TIMES DURING THE RAINY SEASON (OCTOBER 15 TO APRIL 15). NECESSARY MATERIALS SHALL BE AVAILABLE ON–SITE AND STOCKPILED AT CONVENIENT LOCATIONS TO FACILITATE RAPID CONSTRUCTION OF EMERGENCY DEVICES WHEN RAIN IS IMMINENT.
4. EROSION CONTROL DEVICES SHOWN ON THIS PLAN MAY BE REMOVED WHEN APPROVED BY THE BUILDING OFFICIAL IF THE GRADING OPERATION HAS PROGRESSED TO THE POINT WHERE THEY ARE NO LONGER REQUIRED.
5. GRADED AREAS ADJACENT TO FILL SLOPES LOCATED AT THE SITE PERIMETER MUST DRAIN AWAY FROM THE TOP OF SLOPE AT THE CONCLUSION OF EACH WORKING DAY. ALL LOOSE SOILS AND DEBRIS THAT MAY CREATE A POTENTIAL HAZARD TO OFF–SITE PROPERTY SHALL BE STABILIZED OR REMOVED FROM THE SITE ON A DAILY BASIS.
6. ALL SILT AND DEBRIS SHALL BE REMOVED FROM ALL DEVICES WITHIN 24 HOURS AFTER EACH RAINSTORM AND BE DISPOSED OF PROPERLY.
7. A GUARD SHALL BE POSTED ON SITE WHEREVER THE DEPTH OF WATER IN ANY DEVICE EXCEEDS TWO FEET. THE DEVICE SHALL BE DRAINED OR PUMPED DRY WITHIN 24 HOURS AFTER EACH RAINSTORM. PUMPING AND DRAINING OF ALL BASINS AND DRAINAGE DEVICES MUST COMPLY WITH THE APPROPRIATE BMP FOR DEWATERING OPERATIONS.
8. THE PLACEMENT OF ADDITIONAL DEVICES TO REDUCE EROSION DAMAGE AND CONTAIN POLLUTANTS WITHIN THE SITE IS LEFT TO THE DISCRETION OF THE FIELD ENGINEER. ADDITIONAL DEVICES AS NEEDED SHALL BE INSTALLED TO RETAIN SEDIMENTS AND OTHER POLLUTANTS ON SITE.
9. DESILTING BASINS MAY NOT BE REMOVED OR MADE INOPERABLE BETWEEN OCTOBER 15 AND APRIL 15 OF THE FOLLOWING YEAR WITHOUT THE APPROVAL OF THE BUILDING OFFICIAL.
10. STORM WATER POLLUTION AND EROSION CONTROL DEVICES ARE TO BE MODIFIED, AS NEEDED, AS THE PROJECT PROGRESSES, THE DESIGN AND PLACEMENT OF THESE DEVICES IS THE RESPONSIBILITY OF THE FIELD ENGINEER. PLANS REPRESENTING CHANGES MUST BE SUBMITTED FOR APPROVAL IF REQUESTED BY THE BUILDING OFFICIAL.
11. EVERY EFFORT MUST BE MADE TO ELIMINATE THE DISCHARGE OF NON–STORM WATER FROM THE PROJECT SITES AT ALL TIMES.
13. ALL DEPOSITS MUST BE SWEPT UP IMMEDIATELY AND MAY NOT BE WASHED DOWN BY RAIN OR OTHER MEANS.
15. ANY SLOPES WITH DISTURBED SOILS OR DENUDED OF VEGETATION MUST BE STABILIZED SO AS TO INHIBIT EROSION BY WIND AND WATER.
16. ERODED SEDIMENTS AND POLLUTANTS SHALL BE RETAINED ON SITE AND SHALL NOT BE TRANSPORTED FROM THE SITE VIA SHEET FLOW, SWALES, AREA DRAINS, NATURAL DRAINAGE OR WIND.
17. STOCKPILES OF EARTH AND OTHER CONSTRUCTION–RELATED MATERIALS SHALL BE COVERED AND/OR PROTECTED FROM BEING TRANSPORTED FROM THE SITE BY WIND OR WATER.
18. FUELS, OILS, SOLVENTS AND OTHER TOXIC MATERIALS MUST BE STORED IN ACCORDANCE WITH THEIR LISTING AND SHALL NOT CONTAMINATE THE SOIL NOR THE SURFACE WATERS. ALL APPROVED TOXIC STORAGE CONTAINERS ARE TO BE PROTECTED FROM THE WEATHER. SPILLS MUST BE CLEANED UP IMMEDIATELY AND DISPOSED OF PROPERLY AND SHALL NOT BE WASHED INTO THE DRAINAGE SYSTEM.
19. NON–STORM WATER RUNOFF FROM EQUIPMENT AND VEHICLE WASHING AND ANY OTHER ACTIVITY SHALL BE CONTAINED ON THE PROJECT SITE.
20. EXCESS OR WASTE CONCRETE MAY NOT BE WASHED INTO THE PUBLIC WAY OR ANY DRAINAGE SYSTEM. PROVISIONS SHALL BE MADE TO RETAIN CONCRETE WASTE ON–SITE UNTIL IT CAN BE APPROPRIATELY DISPOSED OF OR RECYCLED.
21. TRASH AND CONSTRUCTION – RELATED SOLID WASTES MUST BE DEPOSITED INTO A COVERED RECEPTACLE TO PREVENT CONTAMINATION OF STORM WATER AND DISPERSAL BY WIND.
22. SEDIMENTS AND OTHER MATERIALS SHALL NOT BE TRACKED FROM THE SITE BY VEHICLE TRAFFIC. THE CONSTRUCTION ENTRANCE ROADWAYS MUST BE STABILIZED SO AS TO INHIBIT SEDIMENTS FROM BEING DEPOSITED INTO THE STREET/PUBLIC WAYS. ACCIDENTAL DEPOSITIONS MUST BE SWEPT UP IMMEDIATELY AND MAY NOT BE WASHED DOWN BY RAIN OR BY ANY OTHER MEANS.
23. RETENTION BASINS OF SUFFICIENT SIZE SHALL BE PROVIDED TO RETAIN STORM WATER RUNOFF ON–SITE AND SHALL BE PROPERLY LOCATED TO COLLECT ALL TRIBUTARY SITE RUNOFF.
24. WHERE RETENTION OF STORM WATER RUNOFF ON–SITE IS NOT FEASIBLE DUE TO SITE CONSTRAINTS, RUNOFF MAY BE CONVEYED TO THE STREET AND THE STORM DRAIN SYSTEM PROVIDED THAT AN APPROVED FILTERING SYSTEM IS INSTALLED AND MAINTAINED ON–SITE DURING THE CONSTRUCTION DURATION.
25. DEVELOPERS/CONTRACTORS ARE RESPONSIBLE TO INSPECT ALL EROSION CONTROL DEVICES AND BMP's TO ENSURE THEY ARE INSTALLED AND FUNCTIONING PROPERLY IF THERE IS A 50% OR GREATER PROBABILITY OF PREDICTED PRECIPITATION, AND AFTER ACTUAL PRECIPITATION. A CONSTRUCTION SITE INSPECTION CHECKLIST AND INSPECTION LOG SHALL BE MAINTAINED AT THE PROJECT SITE AT ALL TIMES AND AVAILABLE FOR REVIEW BY THE BUILDING OFFICIAL (COPIES OF SELF–INSPECTION CHECKLIST AND INSPECTION LOGS ARE AVAILABLE UPON REQUEST).

BUREAU OF ENGINEERING
OFFICIAL RECORD

EROSION CONTROL PLAN

20 10 0 20 40
SCALE: 1" = 20'

MCA ENGINEERS, INC.
CIVIL STRUCTURAL TRANSPORTATION
707 S. Grand Ave., Suite 700, Los Angeles, CA 90017
Tel: 213.955.1200 Fax: 213.955.1211

BUREAU OF ENGINEERING
ENGINEERING
CITY OF LOS ANGELES

NO.	REVISION DESCRIPTION	DATE	BY

BUILDING NO. -
INDEX NO. RP-300118

REGISTERED PROFESSIONAL ENGINEER
VIRGILIO C. AOANAN
No. C36079
Exp. 6/30/20
CIVIL
STATE OF CALIFORNIA

DEPARTMENT OF PUBLIC WORKS
CITY OF LOS ANGELES

GARY LEE MOORE, PE, ENV SP
CITY ENGINEER

		DATE:
ARCHITECTURAL DIVISION		
ARCHITECT/ENGINEER:	VIRGILIO AOANAN	LIC. NO.: C36079
DESIGNED BY:	VIRGILIO AOANAN	03/03/2020
DRAWN BY:	AUTUMN WAGGONER	03/03/2020
CHECKED BY:	VIRGILIO AOANAN	03/03/2020
APPROVED BY:	VIRGILIO AOANAN	03/03/2020

VERTICAL CONTROL:
HORIZONTAL CONTROL:
SHEET TITLE: EROSION CONTROL PLAN
PROJECT: GRANADA HILLS POOL AND BATHHOUSE REPLACEMENT PROJECT
ADDRESS: 16730 CHATSWORTH STREET GRANADA HILLS, CA 91344

WORK ORDER NO. #E170517
PLAN FILE NO. #308
DRAWING NO. C600
SHEET 18 OF SHEETS 19

BID SET
PROJECT ISSUE DATE: 06/22/21

PLOTTED:09/18/2019 1:00:00 PM

THE CITY OF LOS ANGELES OR ITS OFFICERS OR AGENTS SHALL NOT BE RESPONSIBLE FOR THE ACCURACY OR COMPLETENESS OF ELECTRONIC COPIES OF THIS PLAN SHEET.

TTLB TEMPLATE REVISION DATE: 02/2013
SHEET ISSUE DATE: 01 January, 2000
FILE PATH:

REVISION DATES (DESIGN STAGE ONLY)

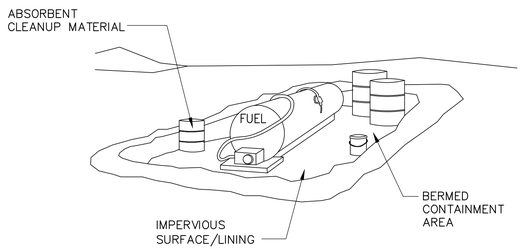

NOTE:

FUELING SHALL BE PERFORMED IN A DESIGNATED AREA, AWAY FROM COURSES. ABSORBENT CLEANUP MATERIAL SHALL BE ON SITE AND USED IMMEDIATELY IN THE EVENT OF A SPILL.

1 VEHICLE / EQUIPMENT FUELING

SCALE: NOT TO SCALE

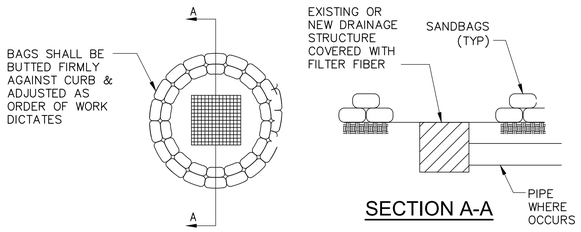

SECTION A-A

2 GRAVEL BAG CHECKDAM

SCALE: NOT TO SCALE

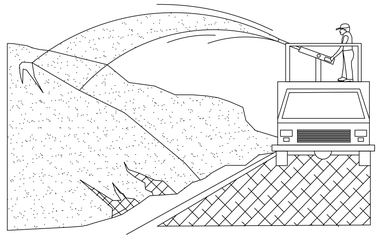

NOTES:

1. SOIL/SLOPE STABILIZATION PRACTICES SHALL BE DESIGNED TO PRESERVE EXISTING VEGETATION WHERE FEASIBLE AND TO REVEGETATE OPEN AREAS AS SOON AS FEASIBLE AFTER GRADING. THESE CONTROL PRACTICES SHALL INCLUDE TEMPORARY SEEDING, PERMANENT SEEDING, MULCHING, SOD STABILIZATION, VEGETATIVE BUFFER STRIPS, PROTECTION OF TREES, OR OTHER SOIL STABILIZATION PRACTICES.
2. SOIL STABILIZATION SHALL BE IMPLEMENTED ON ALL INACTIVE DISTURBED AREAS FROM NOVEMBER 1 THRU APRIL 15 AND ON ALL DISTURBED AREAS DURING A RAIN EVENT OR POTENTIAL RAIN.
3. STABILIZATION PRACTICES SHALL CONTROL/PREVENT EROSION FROM THE FORCES OF WIND AND WATER.
4. STABILIZATION PRACTICES SHALL BE IMPLEMENTED IN CONJUNCTION WITH SEDIMENT TRAPPING/FILTERING PRACTICES AND PRACTICES TO REDUCE THE TRACKING OF SEDIMENT ONTO PAVED ROADS.
5. WHEN USING STRAW MULCHING, THE MINIMUM APPLICATION SHALL BE 2 TONS/ACRE. MULCH MUST BE ANCHORED IMMEDIATELY TO MINIMIZE LOSS BY WIND OR WATER.
6. WHEN USING HYDROSEEDING/MULCHING, THE MINIMUM APPLICATION OF WOOD FIBER SHALL BE 1,500 LBS/ACRE, THAT DOES NOT CONTAIN MORE THAN 50 PERCENT NEWSPRINT.
7. FOR SEEDING RECOMMENDATIONS, USDA, NATURAL RESOURCES CONSERVATION SERVICE.

3 EROSION CONTROL

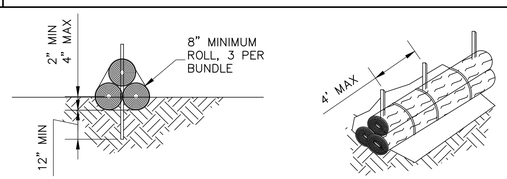

4 FIBER ROLL DETAIL

SCALE: NOT TO SCALE

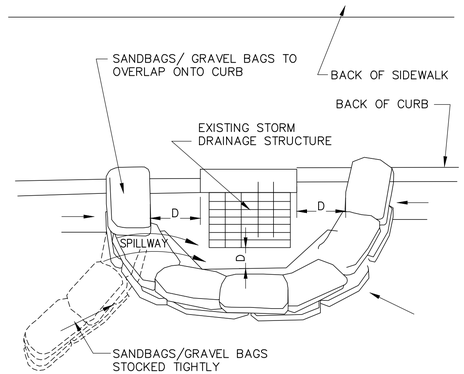

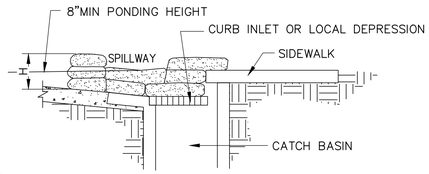

NOTES:

1. INLET PROTECTION IS REQUIRED ALONG WITH OTHER POLLUTION PREVENTION MEASURES SUCH AS: EROSION CONTROL, SOIL STABILIZATION, AND MEASURES TO PREVENT TRACKING ONTO PAVED SURFACES.
2. MODIFY INLET PROTECTION AS NEEDED TO AVOID CREATING TRAFFIC HAZARDS.
3. INCLUDE INLET PROTECTION MEASURES AT HILLSIDE V–DITCHES AND MISCELLANEOUS DRAINAGE SWALES.
4. INLET PROTECTION SHALL BE PROTECTED AND ACCUMULATED SEDIMENTS REMOVED. SEDIMENT SHALL BE DISPOSED OF PROPERTY AND IN A MANNER THAT ASSURES THAT THE SEDIMENT DOES NOT ENTER THE STORM DRAIN SYSTEM.
5. DAMAGED BAGS SHALL BE REPLACED IMMEDIATELY.
6. ADDITIONAL SANDBAG SEDIMENT TRAPS SHALL BE PLACED AT INTERVALS AS INDICATED ON SITE PLANT.

5 CATCH BASIN/INLET PROTECTION

SCALE: NOT TO SCALE

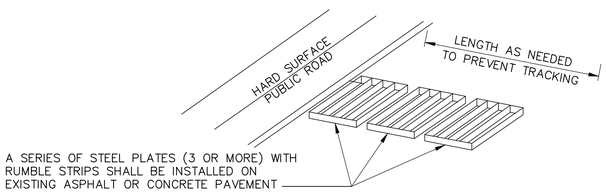

NOTES:

1. SEDIMENTS AND OTHER MATERIALS SHALL NOT BE TRACKED FROM THE SITE BY VEHICLE TRAFFIC. THE CONSTRUCTION ENTRANCE ROADWAYS SHALL BE STABILIZED SO AS TO PREVENT SEDIMENTS FROM BEING DEPOSITED INTO THE PUBLIC ROADS. DEPOSITIONS MUST BE SWEPT UP IMMEDIATELY AND MAY NOT BE WASHED DOWN BY RAIN OR OTHER MEANS INTO THE STORM DRAIN SYSTEM.
2. STABILIZED CONSTRUCTION ENTRANCE SHALL BE:

   A. LOCATED AT ANY POINT WHERE TRAFFIC WILL BE ENTERING OR LEAVING A CONSTRUCTION SITE RD OR FROM A PUBLIC RIGHT OF WAY, STREET, ALLEY, AND SIDEWALK OR PARKING AREA.

   B. A SERIES OF STEEL PLATES WITH "RUMBLE STRIPS", AND/OR MIN 4" COARSE AGGREGATE WITH LENGTH, WIDTH & THICKNESS AS NEEDED TO ADEQUATELY PREVENT ANY TRACKING ONTO PAVED SURFACES.

3. ADDING A WASH RACK WITH A SEDIMENT TRAP LARGE ENOUGH TO COLLECT ALL WASH WATER CAN GREATLY IMPROVE EFFICIENCY.
4. ALL VEHICLES ACCESSING THE CONSTRUCTION SITE SHALL UTILIZE THE STABILIZED CONSTRUCTION ENTRANCE SITES.

STREET MAINTENANCE

1. REMOVE ALL SEDIMENT DEPOSITED ON PAVED ROADWAYS IMMEDIATELY.
2. SWEEP PAVED AREAS THAT RECEIVE CONSTRUCTION TRAFFIC WHENEVER SEDIMENT BECOMES VISIBLE.
3. PAVEMENT WASHING WITH WATER IS PROHIBITED IF IT RESULTS IN A DISCHARGE TO THE STORM DRAIN SYSTEM.

6 STABILIZED CONSTRUCTION ENTRANCE / EXIT

NOT TO SCALE

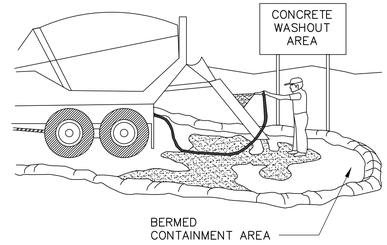

NOTES:

1. EXCESS AND WASTE CONCRETE SHALL NOT BE WASHED INTO STREET OR A DRAINAGE SYSTEM
2. FOR WASHOUT OF CONCRETE AND MORTAR PRODUCTS, A DESIGNATED CONTAINMENT FACILITY OF SUFFICIENT CAPACITY TO RETAIN LIQUID AND SOLID WASTE SHALL PROVIDED ON SITE.
3. SLURRY FROM CONCRETE AND ASPHALT SAW CUTTING SHALL BE VACUUMED OR CONTAINED,DRIED, PICKED UP AND DISPOSED OFF PROPERTY.

7 CONCRETE WASTE MANAGEMENT

SCALE: NOT TO SCALE

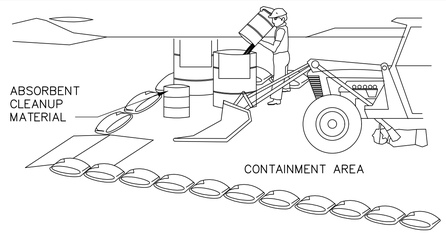

NOTES:

1. LEAKING VEHICLES AND EQUIPMENT SHALL NOT BE ALLOWED ON–SITE. EQUIPMENT AND VEHICLES SHALL BE INSPECTED FREQUENTLY FOR LEAKS AND SHALL BE REPAIRED IMMEDIATELY. CLEAN UP SPILLS AND LEAKS PROMPTLY WITH ABSORBENT; DO NOT FLUSH WITH WATER.
2. VEHICLES AND EQUIPMENT SHALL BE MAINTAINED AND REPAIRED ON–SITE ONLY IN DESIGNATED AREAS. PREVENT RUN–ON AND RUN–OFF FROM DESIGNATED AREAS. CONTAINMENT DEVICES SHALL BE PROVIDED AND AREAS SHALL BE COVERED IF NECESSARY.
3. DESIGNATE ON–SITE VEHICLE AND EQUIPMENT MAINTENANCE AREAS, WAY FROM STORM DRAIN INLETS AND WATERCOURSES.
4. ALWAYS USE SECONDARY CONTAINMENT, SUCH AS A DRAIN PAN OR DROP CLOTH, TO CATCH SPILLS AND LEAKS WHEN REMOVING OR CHANGING FLUIDS.
5. LEGALLY DISPOSE OF USED OILS, FLUIDS, AND LUBRICANTS.
6. PROVIDE SPILL CONTAINMENT DIKES OR SECONDARY CONTAINMENT AROUND STORED OIL, FUEL, AND CHEMICAL DRUMS.
7. MAINTAIN ON ADEQUATE SUPPLY OF ABSORBENT SPILL CLEANUP MATERIALS IN DESIGNATED AREA.

8 EQUIPMENT REPAIR/MAINTENANCE

SCALE: NOT TO SCALE

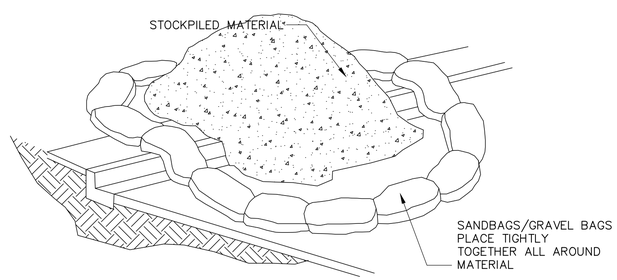

NOTES:

1. DIRT AND OTHER CONSTRUCTION RELATED MATERIALS PLACED IN THE STREET OR ON OTHER IMPERVIOUS SURFACES MUST BE CONTAINED WITH SANDBAGS OR OTHER MEASURES TO PREVENT TRANSPORT TO THE STORMDRAIN SYSTEM.
2. ANY CONSTRUCTION MATERIAL STORED OR STOCKPILED ON–SITE SHALL BE PROTECTED FROM BEING TRANSPORTED BY THE FORCE OF WIND OR WATER.

9 MATERIAL STORAGE

NOT TO SCALE

BUREAU OF ENGINEERING
OFFICIAL RECORD

MCA ENGINEERS, INC.
CIVIL ENGINEERS
Suite 3, Chatsfield Avenue, Suite 210, Alhambra, CA 91801
Tel: (626) 284-1200 Fax: (626) 284-1201

DEPARTMENT OF PUBLIC WORKS
CITY OF LOS ANGELES
BUREAU OF ENGINEERING
CITY OF LOS ANGELES ENGINEERING

NO.	REVISION DESCRIPTION	DATE	BY

BUILDING NO. -
INDEX NO. RP-300118

REGISTERED PROFESSIONAL ENGINEER
VIRGILIO C. AOANAN
No. C36079
Exp. 6/30/20
CIVIL
STATE OF CALIFORNIA

CITY ENGINEER DATE:

VERTICAL CONTROL:	
HORIZONTAL CONTROL:	
SHEET TITLE:	MISCELLANEOUS DETAILS
PROJECT:	GRANADA HILLS POOL AND BATHHOUSE REPLACEMENT PROJECT
ADDRESS:	16730 CHATSWORTH STREET GRANADA HILLS, CA 91344

ARCHITECT/ENGINEER:	VIRGILIO AOANAN	LIC. NO. C36079	03/03/2020	
DESIGNED BY:	VIRGILIO AOANAN		03/03/2020	
DRAWN BY:	AUTUMN WAGGONER		03/03/2020	
CHECKED BY:	VIRGILIO AOANAN		03/03/2020	
APPROVED BY:	VIRGILIO AOANAN		03/03/2020	

GARY LEE MOORE, PE, ENV SP
ARCHITECTURAL DIVISION

WORK ORDER NO. #E170517
PLAN FILE NO. #308
DRAWING NO. C601
SHEET 19 OF SHEETS 19

BID SET
PROJECT ISSUE DATE: 06/22/21

PLOTTED:09/18/2019 1:00:00 PM

THE CITY OF LOS ANGELES OR ITS OFFICERS OR AGENTS SHALL NOT BE RESPONSIBLE FOR THE ACCURACY OR COMPLETENESS OF ELECTRONIC COPIES OF THIS PLAN SHEET.

TTLB TEMPLATE REVISION DATE: 02/2013
SHEET ISSUE DATE: 01 January, 2000
FILE PATH:
REVISION DATES: (DESIGN STAGE ONLY)

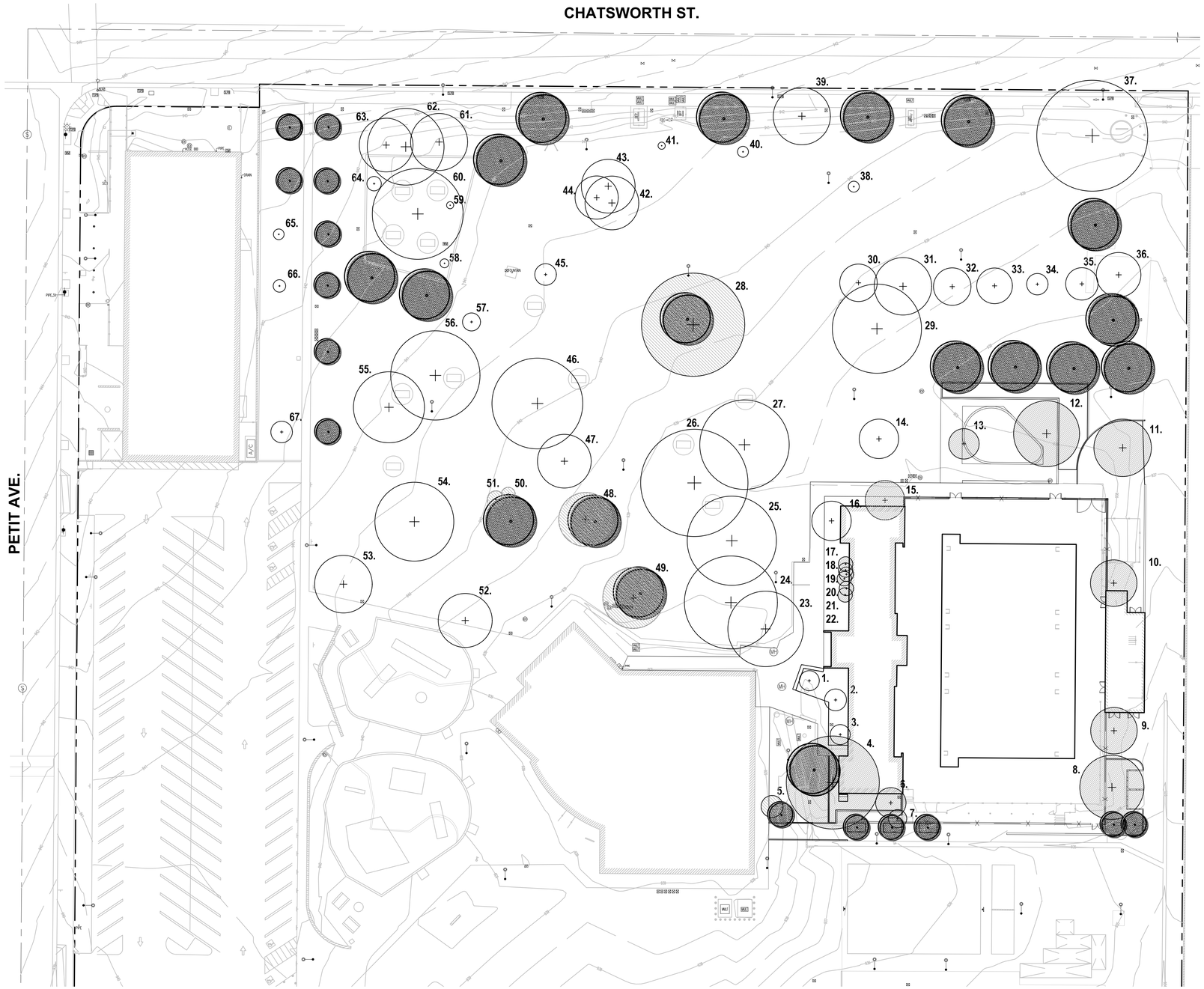

	EXISTING TREES	CANOPY	CIRCUMFERENCE*	
1.	KING PALM	11'	25"	
2.	KING PALM (3 TRUNKS)	12'	21", 23", 22.5"	
3.	KING PALM	11'	31.5"	
4.	ALEPPO PINE	52'	113"	
5.	SWEET GUM	12'	24"	
6.	WEEPING BOTTLE BRUSH	17'	41"	
7.	MEXICAN FAN PALM	10'	59"	
8.	CAROB	36'	116"	
9.	CAROB	26'	106"	
10.	CAROB	26'	89"	
11.	CAROB	32'	80"	
12.	ASH	37'	67"	
13.	SYCAMORE	17'	26"	
14.	SYCAMORE	22'	25"	
15.	CAROB	22'	45"	
16.	CARROTWOOD (SPLIT TRUNK)	22'	44", 22"	
17.	PODOCARPUS (SPLIT TRUNK)	8'	34", 23"	
18.	PODOCARPUS	8'	26"	
19.	PODOCARPUS	8'	31"	
20.	PODOCARPUS	8'	34"	
21.	PODOCARPUS	8'	24"	
22.	PODOCARPUS	8'	54"	
23.	MODESTO ASH	42'	72"	
24.	ALEPPO PINE	52'	105"	
25.	CHINESE ELM	48'	64"	
26.	CHINESE ELM	60'	68"	
27.	CHINESE ELM	50'	60"	
28.	MULBERRY	32'	74"	
29.	ASH	48'	86"	
30.	CANARY ISLAND PINE	21'	57"	
31.	CANARY ISLAND PINE	26'	84"	
32.	CANARY ISLAND PINE	21'	74"	
33.	CANARY ISLAND PINE	20'	72"	
34.	CANARY ISLAND PINE	22'	60"	
35.	CANARY ISLAND PINE	18'	72"	
36.	CANARY ISLAND PINE	24'	69"	
37.	ALEPPO PINE	64'	137"	
38.	PURPLE-LEAF PLUM	6'	14"	(LOW BRANCHING)
39.	CANARY ISLAND PINE	32'	97"	
40.	PURPLE-LEAF PLUM	6'	17"	(LOW BRANCHING)
41.	PURPLE-LEAF PLUM	4'	11"	(LOW BRANCHING)
42.	SYCAMORE	30'	74"	
43.	SYCAMORE	30'	68"	
44.	SYCAMORE	28'	75"	
45.	SYCAMORE	12'	25"	
46.	SYCAMORE	10'	16"	
47.	CHINESE ELM	42'	49"	
48.	MULBERRY	30'	58"	
49.	MULBERRY	34'	37"	
50.	SYCAMORE	8'	48"	(POOR CONDITION)
51.	SYCAMORE	10'	39"	(POOR CONDITION)
52.	MODESTO ASH	30'	60"	
53.	MODESTO ASH	32'	61"	
54.	ASH	44'	76"	
55.	CHINESE ELM	40'	48"	
56.	CHINESE ELM	50'	53"	
57.	SYCAMORE	14'	18"	
58.	GINGKO	5'	24"	
59.	GINGKO	4'	23'	
60.	CHINESE ELM	52'	48"	
61.	EUCALYPTUS	32'	78"	
62.	EUCALYPTUS	43'	122"	
63.	EUCALPYTUS	30'	113" (SPLIT TRUNK)	
64.	GINGKO	8'	23"	
65.	TABABUIA	8'	8"	
66.	MADRONE	7'	17"	
67.	TABABUIA	12'	15"	

* CIRCUMFERENCE MEASURED AT APPROX. 5' ABOVE THE GROUND

TREE LEGEND

POOL PROJECT TREE REMOVAL, ORIGINAL LIMIT OF WORK. TOTAL: 16 TREES

CITY OF LOS ANGELES DEPT. OF RECREATION & PARKS ARBORIST RECOMMENDED ADDITIONAL TREE REMOVALS. TOTAL: 6 TREES

NEW TREE CANOPY, 2:1 REPLACEMENT FOR ORIGINAL LIMIT OF WORK. TOTAL: 32 TREES

NOTE: THIS ANALYSIS WAS DRAWN FROM FIELD NOTES, IT IS NOT A FIELD SURVEY. CONTRACTOR TO VERIFY ALL CONDITIONS IN THE FIELD BEFORE PROCEEDING. REFER TO TECHNICAL SPECIFICATIONS APPENDIX PROTECTION OF TREES

WITHERS & SANDGREN
LANDSCAPE ARCHITECTURE + PLANNING
20948 TULSA STREET
CHATSWORTH, CA 91021-0276
(818) 291-0200
lacey@withersandsandgren.com

BUREAU OF ENGINEERING
OFFICIAL RECORD

0 15 30 60
1" = 30'

BUREAU OF ENGINEERING
ENGINEERING
CITY OF LOS ANGELES

NO.	REVISION DESCRIPTION	DATE	BY

BUILDING NO. -
INDEX NO. RP-300118

LICENSED LANDSCAPE ARCHITECT GARY LEE MOORE
No. 3820
Signature
31 AUG 2021
Date
3 MAR 2019
STATE OF CALIFORNIA

DEPARTMENT OF PUBLIC WORKS
CITY OF LOS ANGELES

GARY LEE MOORE, PE, ENV SP
CITY ENGINEER

DATE:	3/03/2020
ARCHITECTURAL DIVISION	3/03/2020
ARCHITECT/ENGINEER: LACEY WITHERS LIC. NO.: CA 3820	3/03/2020
DESIGNED BY: LACEY WITHERS	3/03/2020
DRAWN BY: PN	3/03/2020
CHECKED BY: LW	
APPROVED BY: LW	

VERTICAL CONTROL:
HORIZONTAL CONTROL:

SHEET TITLE: TREE CANOPY ANALYSIS

PROJECT: GRANADA HILLS POOL AND BATHHOUSE REPLACEMENT PROJECT

ADDRESS: 16730 CHATSWORTH STREET GRANADA HILLS, CA 91344

BID SET
PROJECT ISSUE DATE: 06/22/21

WORK ORDER NO. #E170517
PLAN FILE NO. #308
DRAWING NO. L-0.10
SHEET 0 OF SHEETS

REVISION DATES (DESIGN STAGE ONLY)

SHEET ISSUE DATE: 01/04/18

FILE PATH: BIM 360://Granada Hills Pool Renovation/A_Granada-Hills_2017.rvt

THE CITY OF LOS ANGELES OR ITS OFFICERS OR AGENTS SHALL NOT BE RESPONSIBLE FOR THE ACCURACY OR COMPLETENESS OF ELECTRONIC COPIES OF THIS PLAN SHEET.

PLOTTED: 6/26/2018 2:53:10 PM

CUT AND CAP EXISTING IRRIGATION LATERAL LINE OF VALVE 21. REMOVE LATERAL LINE AND ROTORS IN AREA OF CONSTRUCTION. RETURN ROTORS TO CITY.

CAPPED ROTOR

INSTALL NEW LATERAL LINE TO JOIN REMAINING ROTORS ON VALVE 20 TO VALVE 21. CONTRACTOR TO ADJUST NOZZLES IN FIELD AS NECESSARY TO PROVIDE COMPLETE COVERAGE.

CUT AND CAP EXISTING IRRIGATION LATERAL LINE OF VALVE 20. REMOVE LATERAL LINE AND ROTORS IN AREA OF CONSTRUCTION. RETURN ROTORS TO CITY.

VERIFY QUICK COUPLER IN FIELD. SEE IRRIGATION PLAN.

EX. B21

EX. B19

EX. B20

REMOVE VALVE 20, INDICATED ROTORS AND LATERALS. PROTECT ELECTRICAL LINES FOR INSTALLATION OF NEW VALVE PER IRRIGATION PLAN AND DETAILS.

REMOVE ROTORS, LATERAL LINES, AND VALVE 19. PROTECT ELECTRICAL LINES FOR INSTALLATION OF NEW VALVE PER IRRIGATION PLAN AND DETAILS.

PROTECT EXISTING MAINLINE AND QUICK COUPLER IN PLACE.

REMOVE VALVE 7, ALL IRRIGATION HEADS AND LATERALS FROM EXISTING PLANTER. PROTECT ELECTRICAL LINES FOR INSTALLATION OF NEW VALVE PER IRRIGATION PLAN AND DETAILS.

EX. B7

VERIFY CONNECTION TO VALVE

EX. B1

EX. B22

CONTRACTOR TO VERIFY LOCATION OF MAINLINE FROM QUICK COUPLE TO VALVE 6 ON SOUTH SIDE OF BATH HOUSE

TREES (3) TO BE REMOVED FOR RENOVATION OF POOL. REMOVE ANY FOUND IRRIGATION EQUIPMENT. CAP ALL LINES ENCOUNTERED. GRIND ROOTS PER SPECIFICATIONS.

AS-BUILT DRAWINGS PRE-DATE CONSTRUCTION OF COMMUNITY RECREATION BUILDING. VERIFY LOCATION OF MAINLINE IN FIELD AND EXTEND AS NEED FOR NEW VALVES. SEE IRRIGATION PLAN.

REMOVE VALVE 10, ALL IRRIGATION HEADS AND LATERALS FROM EXISTING PLANTER. PROTECT ELECTRICAL LINES FOR INSTALLATION OF NEW VALVE PER IRRIGATION PLAN. PROTECT REMAINING KING PALMS PER TREE PROTECTION NOTES ON SHEET L-2.00.

EX. B10

TREE TO BE REMOVED

EXISTING CONTROLLERS A,B,C, & D. PROTECT IN PLACE.

REMOVE VALVE 6, QUICK CUPLER, ALL IRRIGATION HEADS AND LATERALS FROM EXISTING PLANTERS. PROTECT ELECTRICAL LINES FOR INSTALLATION OF NEW VALVE PER IRRIGATION PLAN.

TREE TO BE REMOVED

EX. B6

PROTECT EXISTING HEADS AND LATERALS IN TURF AREA DURING RECONSTRUCTION OF CONCRETE DRAINAGE SWALE (VALVE 17 ON CONTROLLER C). CONTRACTOR TO REPAIR ANY DAMAGE THAT OCCURS DURING CONSTRUCTION AND RETURN TO WORKING ORDER.

PROTECT EXISTING HEADS AND LATERALS IN ADJACENT TURF AREA DURING CONSTRUCTION (VALVE 18 ON CONTROLLER C). CONTRACTOR TO REPAIR ANY DAMAGE THAT OCCURS DURING CONSTRUCTION AND RETURN TO WORKING ORDER.

EX. C17

EX. C18

NOTES:

1. EXISTING IRRIGATION PLAN BASED ON 1986 AS-BUILTS AND IN-FIELD INSPECTION. **CONTRACTOR SHALL VERIFY ALL INSTALLED IRRIGATION EQUIPMENT IN FIELD BEFORE ANY WORK BEGINS.**
2. CONTRACTOR SHALL INSTALL TRACER WIRE/TAPE OVER ANY UNEARTHED MAINLINE BEFORE RE-BURYING LINE.
3. IRRIGATION CONTRACTOR TO REVIEW TREE REMOVAL PLAN.
4. EXISTING VALVE POSITIONS 6, 7, 10, 19, AND 20 ON CONTROLLER "B" ARE TO BE REUSED IN NEW IRRIGATION PLAN. PROTECT EXISTING WIRING TO REUSE WITH INSTALLATION OF NEW VALVES.
5. CONTRACTOR SHALL PROVIDE NEW AS-BUILT PLANS FOR ALL WORK DONE IN THIS CONTRACT.
6. IRRIGATION TO REST OF PARK TO BE PROTECTED IN PLACE AND MAINTAINED IN OPERATIONAL ORDER THROUGHOUT CONSTRUCTION. ANY DAMAGE THAT OCCURS SHALL BE REPAIRED IMMEDIATELY AT NO COST TO THE CITY.

INDICATES AREA OF CONSTRUCTION REQUIRING REMOVAL OF LANDSCAPE AND IRRIGATION EQUIPMENT

EXISTING VALVE TO REMAIN

VALVE TO BE REMOVED. PROTECT EX. WIRING FOR NEW VALVE INSTALLATION PER IRRIGATION PLAN

EXISTING LATERAL LINE TO REMAIN
EXISTING LATERAL TO BE REMOVED
EXISTING IRRIGATION ROTORS TO BE REMOVED

BUREAU OF ENGINEERING
OFFICIAL RECORD

WITHERS & SANDGREN
LANDSCAPE ARCHITECTURE + PLANNING

0 10 20 32
1" = 20'

BUREAU OF ENGINEERING
ENGINEERING
CITY OF LOS ANGELES

NO.	REVISION DESCRIPTION	DATE	BY

BUILDING NO. -

INDEX NO. RP-300118

LICENSED LANDSCAPE ARCHITECT
CERTIFICATE NO. 3820
31 AUG 2021
Renewal Date
31 MAY 2019
STATE OF CALIFORNIA

DEPARTMENT OF PUBLIC WORKS
CITY OF LOS ANGELES

GARY LEE MOORE, PE, ENV SP
CITY ENGINEER

		DATE:
ARCHITECTURAL DIVISION		
ARCHITECT/ENGINEER:	LACEY WITHERS	LIC. NO.: CA 3820
DESIGNED BY:	LACEY WITHERS	3/03/2020
DRAWN BY:	PN	3/03/2020
CHECKED BY:	LW	3/03/2020
APPROVED BY:	LW	3/03/2020

VERTICAL CONTROL:
HORIZONTAL CONTROL:

SHEET TITLE: EXISTING IRRIGATION DEMOLITION PLAN

PROJECT: GRANADA HILLS POOL AND BATHHOUSE REPLACEMENT PROJECT

ADDRESS: 16730 CHATSWORTH STREET GRANADA HILLS, CA 91344

BID SET
PROJECT ISSUE DATE: 06/22/21

WORK ORDER NO. #E170517

PLAN FILE NO. #308

DRAWING NO. L-0.20
SHEET O F SHEETS

PLOTTED:6/26/2018 2:53:10 PM

REVISION DATES (DESIGN & STAGE ONLY)

SHEET ISSUE DATE: 01/04/18

FILE PATH: BIM 360://Granada Hills Pool Renovation/A_Granada-Hills_2017.rvt

THE CITY OF LOS ANGELES OR ITS OFFICERS OR AGENTS SHALL NOT BE RESPONSIBLE FOR THE ACCURACY OR COMPLETENESS OF ELECTRONIC COPIES OF THIS PLAN SHEET.

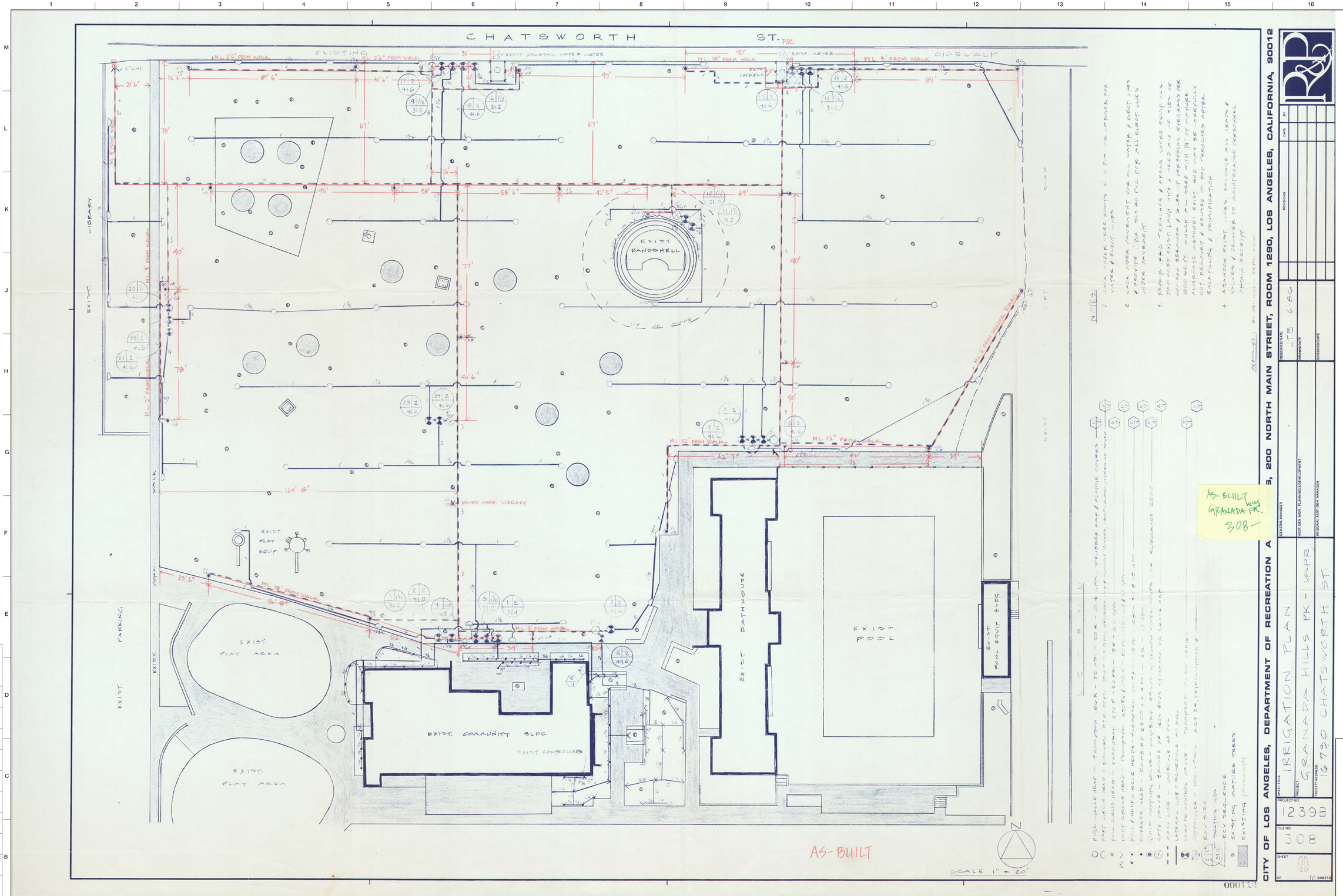

CITY OF LOS ANGELES, DEPARTMENT OF RECREATION AND PARKS, 200 NORTH MAIN STREET, ROOM 1290, LOS ANGELES, CALIFORNIA, 90012

R&P

SHEET TITLE	IRRIGATION PLAN
PROJECT	GRANADA HILLS PK. - WPR
FACILITY ADDRESS	16730 CHATSWORTH ST.
PROJECT NO.	12398
FILE NO.	308
SHEET	8 OF 10 SHEETS

GENERAL MANAGER	
ASST. GEN. MGR. - PLANNING & DEVELOPMENT	
REGIONAL ASST. GEN. MANAGER	
DESIGNED/DATE	JTB 6-8-6
DRAWN/DATE	
CHECKED/DATE	

REVISIONS | DATE | BY

DEPARTMENT OF PUBLIC WORKS

GARY LEE MOORE, PE, ENV SP — CITY ENGINEER

ARCHITECT/ENGINEER: LACEY WITHERS LIC. NO.: CA 3820

DESIGNED BY:	LACEY WITHERS	3/03/2020
DRAWN BY:	PN	3/03/2020
CHECKED BY:	LW	3/03/2020
APPROVED BY:	LW	3/03/2020

BUREAU OF ENGINEERING

NO.	REVISION DESCRIPTION	DATE	BY

INDEX NO. RP-300118

BUILDING NO. -

ENGINEERING — CITY OF LOS ANGELES

CITY OF LOS ANGELES

VERTICAL CONTROL:

HORIZONTAL CONTROL:

SHEET TITLE: IRRIGATION AS-BUILT 1986

PROJECT: GRANADA HILLS POOL AND BATHHOUSE REPLACEMENT PROJECT

ADDRESS: 16730 CHATSWORTH STREET GRANADA HILLS, CA 91344

WORK ORDER NO. #E170517

PLAN FILE NO. #308

DRAWING NO. L-0.30

SHEET OF SHEETS

BID SET

PROJECT ISSUE DATE: 06/22/21

PLOTTED: 6/26/2018 2:53:10 PM

PRINT THIS SHEET IN COLOR FOR GREATER LEGIBILITY.

BUREAU OF ENGINEERING — OFFICIAL RECORD

WITHERS & SANDGREN
LANDSCAPE ARCHITECTURE + PLANNING
20948 TULSA STREET (818) 291-0200
CHATSWORTH, CA 91021-0276 lacey@withersandsandgren.com

THE CITY OF LOS ANGELES OR ITS OFFICERS OR AGENTS SHALL NOT BE RESPONSIBLE FOR THE ACCURACY OR COMPLETENESS OF ELECTRONIC COPIES OF THIS PLAN SHEET.

FILE PATH: BIM 360://Granada Hills Pool Renovation/A_Granada-Hills_2017.rvt

SHEET ISSUE DATE: 01/04/18

REVISION DATES (DESIGN STAGE ONLY)

WATER EFFICIENT LANDSCAPE WORKSHEETS:

REFERENCE EVAPOTRANSPIRATION (ETo): 52.0 (MWELO, JULY 2015, SAN FERNANDO)

HYDROZONE # / PLANTING DESC.	VALVE(S)	PLANT FACTOR	IRRIGATION METHOD	IE	ETAF (PF/IE)	IRRIGATED AREA (SF)	ETAF x AREA	ETWU
REGULAR LANDSCAPE AREAS:								
A (LW) LOW WATER USE TREES	NEW_3, 5, 6	.3	TREE BUBBLERS	.81	.37	1,207	447	14,411
B (LW) LOW WATER USE PLANTINGS	NEW_2, 7, 8 / B6, B7, B10, B20	.3	SHRUB BUBBLERS	.81	.37	4,360	1,613	52,003
					TOTALS:	(A) 5,567	(B) 2,060	66,414
SPECIAL LANDSCAPE AREAS - EXISTING IRRIGATED TURF NOT INCLUDED								
C SWIMMING POOL - ACTIVE PLAY AREA					1.0	9,110	9,110	293,706
D SPLASH PAD - ACTIVE PLAY AREA					1.0	1,003	1,003	32,336
					TOTALS:	(C) 10,113	(D) 10,113	326,043
							ETWU TOTAL:	392,457
							MAXIMUM ALLOWED WATER ALLOWANCE (MAWA):	406,809
							TOTAL IRRIGATED LANDSCAPE AREA FOR PROJECT:	15,680

ETWU = Estimated Total Water Use Per Year (gpy required)
ETWU = ETo x 0.62 x ETAF x AREA

MAWA = Maximum Applied Water Allowance (gpy allowed)
MAWA = (ETo) (0.62) [(ETAF x LA) + ((1-ETAF) x SLA)]
LA = Total Landscape Area in SF
SLA = Total Special Landscape Area in SF
ETAF = For Regular Landscapes
Must be 0.55 or below for residential areas or
0.45 or below for non-residential areas.

ETAF CALCULATIONS:

REGULAR LANDSCAPE AREAS:		ALL LANDSCAPE AREAS:	
TOTAL ETAF x AREA: (B):	2,060	TOTAL ETAF x AREA:(B + D):	12,173
TOTAL AREA: (A):	5,567	TOTAL AREA: (A + C):	15,680
AVERAGE ETAF (B / A):	0.37	AVERAGE ETAF (B + D)/(A + C):	0.77

LANDSCAPE AND IRRIGATION MAINTENANCE SCHEDULE:

1. Landscapes shall be maintained to ensure water use efficiency.
2. A regular maintenance schedule shall be submitted with the Certificate of Completion.
3. Regular maintenance schedule shall include:Routine inspection, adjustment & repair of the irrigation system and its components, aerating and dethatching turf areas, replenishing mulch, fertilizing, pruning, weeding in all landscape areas, and removing and obstruction to emission devices.
4. Operation of system is allowed for auditing and system maintenance.
5. Repair of all irrigation equipment shall be done with the originally installed components or their equivalents.
6. The project applicant/owner is encouraged to implement sustainable or environmentally-friendly practices for overall landscape maintenance.
7. Mulch shall be replaced, at a minimum, on an annual basis or more frequently as-needed.
8. Flush dripline annually, or as needed after maintenance operations.

IRRIGATION AUDIT/ IRRIGATION WATER USE ANALYSIS:

1. All landscape irrigation audits SHALL be conducted by a certified landscape irrigation auditor.
2. For new construction & rehabilitated landscape projects installed after Jan. 1, 2010, project applicant shall submit an irrigation audit report with the Certificate of Completion to the local agency that may include: inspection, system tune-up, system test with distribution uniformity, reporting overspray or run off that causes overland flow, and preparation of an irrigation schedule.
3. Local agency shall administer programs to include irrigation water use analysis, irrigation audits, and irrigation surveys or compliance with MAWA.

IRRIGATION NOTES:

1. THE CONTRACTOR SHALL OBTAIN AND PAY FOR ANY AND ALL PERMITS AND ALL INSPECTIONS
2. THE MANUFACTURER'S DIRECTIONS AND DETAILED DRAWINGS SHALL BE FOLLOWED IN ALL CASES WHERE THE MANUFACTURERS OF ARTICLES USED IN THIS INSTALLATION FURNISHES DIRECTIONS CONCERNING POINTS NOT SHOWN IN THE DRAWINGS AND SPECIFICATIONS.
3. THIS IRRIGATION SYSTEM CONNECTS TO EXISTING INFRASTRUCTURE (VALVES, BACK FLOW, METER, CONTROLLER). COORDINATE WITH CITY STAFF AS NEEDED FOR ALL EXISTING EQUIPMENT.
4. THIS DESIGN IS DIAGRAMMATIC. ALL PIPING, VALVES, ETC. SHOWN WITHIN PAVED AREAS ARE FOR DESIGN CLARIFICATION ONLY AND SHALL BE INSTALLED IN PLANTING AREAS WHEREVER POSSIBLE.
5. PROTECT EXISTING INFRASTRUCTURE AND EQUIPMENT IN PLACE.
6. ALL IRRIGATION EQUIPMENT SHALL BE INSTALLED PER CITY STANDARDS.
7. PIPE SIZES SHALL CONFORM TO THOSE SHOWN ON THE DRAWINGS. NO SUBSTITUTIONS OF SMALLER PIPE SIZES SHALL BE PERMITTED, BUT SUBSTITUTIONS OF LARGER SIZES MAY BE APPROVED. ALL DAMAGED AND REJECTED PIPE SHALL BE REMOVED FROM THE SITE AT THE TIME OF THE SAID REJECTION.
8. IT IS THE RESPONSIBILITY OF THE IRRIGATION CONTRACTOR TO BECOME FAMILIAR WITH THE GRADE DIFFERENCES, LOCATION OF WALLS, OBSTACLES, AND UTILITIES. THE IRRIGATION CONTRACTOR SHALL REPAIR OR REPLACE ALL ITEMS DAMAGED BY HIS WORK. CONTRACTOR SHALL COORDINATE THEIR WORK WITH OTHER CONTRACTORS FOR THE LOCATION AND INSTALLATION OF PIPE SLEEVES AND LATERALS UNDER ROADWAYS AND PAVING, ETC.
9. BEFORE COMMENCING ANY EXCAVATION, THE CONTRACTOR SHALL OBTAIN AN UNDERGROUND SERVICE ALERT I.D. NUMBER BY CALLING 1-800-422-4133. TWO (2) WORKING DAYS SHALL BE ALLOWED AFTER THE I.D.NUMBER IS OBTAINED AND BEFORE THE EXCAVATION WORK IS STARTED SO THAT UTILITY OWNERS CAN BE NOTIFIED.
13. THE IRRIGATION SYSTEM SHALL BE FLUSHED PRIOR TO INSTALLATION OF THE IRRIGATION HEADS.
14. THE SPRINKLER SYSTEM DESIGN IS BASED ON A SYSTEM DESIGN PRESSURE OF **91** P.S.I. AND A MAXIMUM FLOW DEMAND OF **21** G.P.M. THE CONTRACTOR SHALL VERIFY WATER PRESSURES PRIOR TO CONSTRUCTION. REPORT ANY DIFFERENCE BETWEEN WATER PRESSURE INDICATED ON THE DRAWINGS AND THE ACTUAL PRESSURE READING AT THE IRRIGATION POINT OF CONNECTION TO THE LANDSCAPE ARCHITECT.
15. DO NOT WILLFULLY INSTALL THE SPRINKLER SYSTEM AS SHOWN ON THE DRAWINGS WHEN IT IS OBVIOUS IN THE FIELD THAT THERE ARE UNKNOWN OBSTRUCTIONS OR GRADE DIFFERENCES IN THE AREA. DIMENSIONS EXIST THAT MIGHT NOT HAVE BEEN CONSIDERED IN THE ENGINEERING. SUCH OBSTRUCTIONS OR DIFFERENCES SHOULD BE BROUGHT TO THE ATTENTION OF THE LANDSCAPE ARCHITECT. THE CONTRACTOR SHALL ASSUME FULL RESPONSIBILITY FOR ANY NECESSARY REVISIONS.
16. THE INTENT OF THE DESIGN IS TO PROVIDE ADEQUATE IRRIGATION TO ALL PLANTINGS. AS PART OF THE SCOPE OF WORK, PROVIDE ANY ADDITIONAL HEADS, SPECIAL NOZZLES, OR PATTERNS TO ACHIEVE PROPER COVERAGE WITH ZERO OVER SPRAY (RESULTING IN RUNOFF) AT NO ADDITIONAL COST TO THE OWNER.
17. PROVIDE SLEEVES WHERE REQUIRED. USE MIN. 4" DIAMETER SCH. 80 P.V.C., SEE DETAIL FOR DEPTH.
18. LOCATE "AS-BUILT" VALVE CHART IN EACH CONTROLLER - REDUCE AND ENCASE IN PLASTIC.
19. FIELD QUALITY CONTROL BY THE FOLLOWING ADJUSTMENTS TO THE SYSTEM:
• THE CONTRACTOR SHALL FLUSH AND ADJUST ALL IRRIGATION EMISSION DEVISES FOR OPTIMUM PERFORMANCE AND TO PREVENT ZERO OVER SPRAY ONTO WALKS, ROADWAYS, AND BUILDINGS.
• IF IT IS DETERMINED THAT MINOR ADJUSTMENTS IN THE IRRIGATION EQUIPMENT WILL PROVIDE PROPER AND MORE ADEQUATE COVERAGE, THE CONTRACTOR SHALL MAKE SUCH ADJUSTMENTS PRIOR TO PLANTING. ADJUSTMENTS MAY ALSO INCLUDE CHANGES IN SIZES AND DEGREES OF ARC AS REQUIRED. ANY ALTERATION TO THE HYDRAULICS OF THE IRRIGATION SYSTEM MSUT BE APPROVED BY THE LANDSCAPE ARCHITECT OF RECORD AND APPROVED BY THE CITY BEFORE ANY CHANGES ARE MADE. MINOR SPRINKLER ADJUSTMENT IS NOT THE SAME AS ALTERING THE HYDRAULICS BY ADDING SPRINKLERS, OR ELIMINATING OR ADDING VALVES.
• LOWERING RAISED SPRINKLER HEADS BY THE CONTRACTOR SHALL BE ACCOMPLISHED WITHIN 10 DAYS AFTER NOTIFICATION BY THE CITY THROUGH A WRITTEN NOTICE PROVIDED BY THE PUBLIC WORKS INSPECTOR.
• ALL SPRINKLER HEADS AND EMITTERS SHALL BE SET PERPENDICULAR TO THE FINISHED GRADES UNLESS OTHERWISE DESIGNATED ON THE PLANS.
• ALL PVC PIPE AND FITTINGS WILL BE HANDLED WITH CARE TO PREVENT CRACKING OR SPLITTING, AND SHALL NOT BE STORED IN THE SUN. NOSUN-DAMAGED PIPE IS TO BE USED. ALL SUN-DAMAGED PIPE WILL BE REMOVED AND REPLACED IMMEDIATELY WHEN THE PUBLIC WORKS INSPECTOR PROVIDES WRITTEN NOTICE.
20. THE CONTRACTOR SHALL GUARANTEE THE INSTALLED IRRIGATION SYSTEM FOR A PERIOD OF ONE (1) YEAR FROM THE DATE OF ACCEPTANCE OF THE WORK. SHOULD ANY TROUBLE DEVELOP WITHIN THE TIME SPECIFIED DUE TO INFERIOR OR FAULTY MATERIAL OR WORKMANSHIP, THE TROUBLE SHALL BE CORRECTED BY THE CONTRACTOR WITHOUT EXPENSE TO THE OWNER.
21. REFER TO GENERAL NOTES FOR ADDITIONAL INFORMATION REGARDING THIS SECTION OF WORK.
22. WHEN INSTALLATION OF THE IRRIGATION SYSTEM IS COMPLETED, PERFORM A COVERAGE TEST IN THE PRESENCE OF OWNER'S REPRESENTATIVE AND LANDSCAPE ARCHITECT TO DETERMINE THAT COVERAGE FOR PLANTING AND TURF AREAS IS COMPLETE AND ADEQUATE. WHERE INADEQUATE COVERAGE OCCURS, THE IRRIGATION CONTRACTOR SHALL PROVIDE NECESSARY MATERIAL AND PERFORM WORK TO CORRECT ALL INADEQUACIES WITHOUT ADDITIONAL COST.

THESE TESTS AND CORRECTIONS SHALL BE ACCOMPLISHED BEFORE ANY MATERIALS ARE PLANTED.

23. CONTRACTOR IS RESPONSIBLE FOR ADDING CHECK VALVES AS NECESSARY TO PREVENT LOW HEAD DRAINAGE.
24. SUMMER PEAK WATER AMOUNTS SHALL BE APPLIED BETWEEN THE HOURS OF 9PM AND 6AM. DAYTIME WATERING SHALL BE LIMITED TO SEED GERMINATION, PLANT ESTABLISHMENT, TURF RENOVATION, AND MAINTENANCE.

THIS LANDSCAPE DOCUMENTATION PACKAGE COMPLIES WITH CCR TITLE 23, DIV. 2, CH. 2.7: MODEL WATER EFFICIENT LANDSCAPE ORDINANCE. THE LANDSCAPE DOCUMENTATION PACKAGE SHALL CONTAIN:

(1) PROJECT INFORMATION
(2) WATER EFFICIENT LANDSCAPE WORKSHEETS
(3) SOIL MANAGEMENT REPORT (GEO-TECHNICAL REPORT)
(4) LANDSCAPE DESIGN PLAN
(5) IRRIGATION DESIGN PLAN
(6) GRADING (DRAINAGE) DESIGN PLAN (BY OTHERS)

PROJECT INFORMATION:

DATE: 3 MAR 2020 (100% SUBMITTAL)
PROJECT NAME: GRANADA HILLS POOL AND BATHHOUSE REPLACEMENT PROJECT
PROJECT APPLICANT: CITY OF LOS ANGELES DEPARTMENT OF PUBLIC WORKS
PROJECT ADDRESS: 16730 CHATSWORTH ST. GRANADA HILLS, CA, 91344
PARCEL NUMBER (S): APN 2684-002-901

TOTAL PROJECT AREA: 56,143 sf (POOL CONSTRUCTION AREA ONLY)
TOTAL IRRIGATED LANDSCAPE AREA: 5,567 sf
TURF AREA: 0 sf (REPAIRED AFTER CONSTRUCTION, NOT INCLUDED)
TOTAL NON-IRRIGATED AREA: 50,576 sf

WATER SUPPLY TYPE: POTABLE WATER

PROJECT TYPE: POOL RENOVATION / PUBLIC PARK
APPLICANT: ALEXANDER D. NGO, PROJECT MANAGER
CITY OF LOS ANGELES DEPARTMENT OF PUBLIC WORKS, ARCHITECTURAL DIVISION

GREEN BUILDING CODE - WATER EFFICIENCY AND CONSERVATION

FOR PROJECTS THAT INCLUDE LANDSCAPE WORK, THE LANDSCAPE CERTIFICATION, FORM GRN 12, SHALL BE COMPLETED PRIOR TO FINAL INSPECTION APPROVAL. (STATE ASSEMBLY BILL NO. 1881,5.304.1)

"I HAVE COMPLIED WITH THE CRITERIA OF THE ORDINANCE AND APPLIEDD THEM FOR THE EFFICIENT USE OF WATER IN THE LANDSCAPE DESIGN PLANS

LANDSCAPE ARCHITECT SIGNATURE: _____ DATE: 3 MAR 2020

PROJECT CONTACTS:

PROJECT APPLICANT/OWNER:
CITY OF LOS ANGELES / DEPARTMENT OF PUBLIC WORKS
Contact: Alexander D. Ngo, Architect
Project Manager
Email: alex.ngo@lacity.org
Address: 1149 S. Broadway, Suite 830, Los Angeles, CA 90015
Phone: (213) 485-4821

LICENSED LANDSCAPE ARCHITECT:
WITHERS & SANDGREN, LTD.
LANDSCAPE ARCHITECTURE & PLANNING
Contact: Lacey Withers, Principal
Email: lacey@withersandsandgren.com
Address: 20948 Tulsa St., Chatsworth, CA 91311
Phone: (818) 291-0200

WATER PURVEYOR:
METROPOLITAN WATER DISTRICT
Address: 13100 Balboa Blvd, Granada Hills, CA 91344
Phone: (818) 832-2100

BUREAU OF ENGINEERING
OFFICIAL RECORD

WITHERS & SANDGREN
LANDSCAPE ARCHITECTURE + PLANNING
20948 TULSA STREET CHATSWORTH, CA 91021-0276
(818) 291-0200 lacey@withersandsandgren.com

REVISION DATES (DESIGN STAGE ONLY)

SHEET ISSUE DATE: 01/04/18
FILE PATH: BIM 360://Granada Hills Pool Renovation/A_Granada-Hills_2017.rvt
THE CITY OF LOS ANGELES OR ITS OFFICERS OR AGENTS SHALL NOT BE RESPONSIBLE FOR THE ACCURACY OR COMPLETENESS OF ELECTRONIC COPIES OF THIS PLAN SHEET.

BUREAU OF ENGINEERING
ENGINEERING
CITY OF LOS ANGELES

NO.	REVISION DESCRIPTION	DATE	BY

BUILDING NO. -
INDEX NO. RP-300118

LICENSED LANDSCAPE ARCHITECT — STATE OF CALIFORNIA — 31 AUG 2021 — RENEWAL DATE

BUREAU OF PUBLIC WORKS
DEPARTMENT OF PUBLIC WORKS
CITY OF LOS ANGELES

		DATE:
CITY ENGINEER		
GARY LEE MOORE, PE, ENV SP		3/03/2020
ARCHITECTURAL DIVISION		3/03/2020
ARCHITECT/ENGINEER:	LACEY WITHERS LIC. NO.: CA 3820	3/03/2020
DESIGNED BY:	LACEY WITHERS	3/03/2020
DRAWN BY:	PN	3/03/2020
CHECKED BY:	LW	3/03/2020
APPROVED BY:	LW	3/03/2020

VERTICAL CONTROL:
HORIZONTAL CONTROL:

SHEET TITLE: IRRIGATION AS-BUILT
PROJECT: GRANADA HILLS POOL AND BATHHOUSE REPLACEMENT PROJECT
ADDRESS: 16730 CHATSWORTH STREET GRANADA HILLS, CA 91344

BID SET
PROJECT ISSUE DATE: 06/22/21

WORK ORDER NO. #E170517
PLAN FILE NO. #308
DRAWING NO. L-1.00
SHEET NO OF SHEETS

PLOTTED: 6/26/2018 2:53:10 PM

WITHERS & SANDGREN
LANDSCAPE ARCHITECTURE + PLANNING
20948 TULSA STREET
CHATSWORTH, CA 91021-0276
(818) 291-0200
lacey@withersandsandgren.com

POC (EX.)
CONTRACTOR TO VERIFY LOCATION OF MAINLINE IN FIELD. LOCATE ON AS-BUILT DRAWINGS. CONNECT TO AND EXTEND EXISTING MAINLINE PER PLAN.

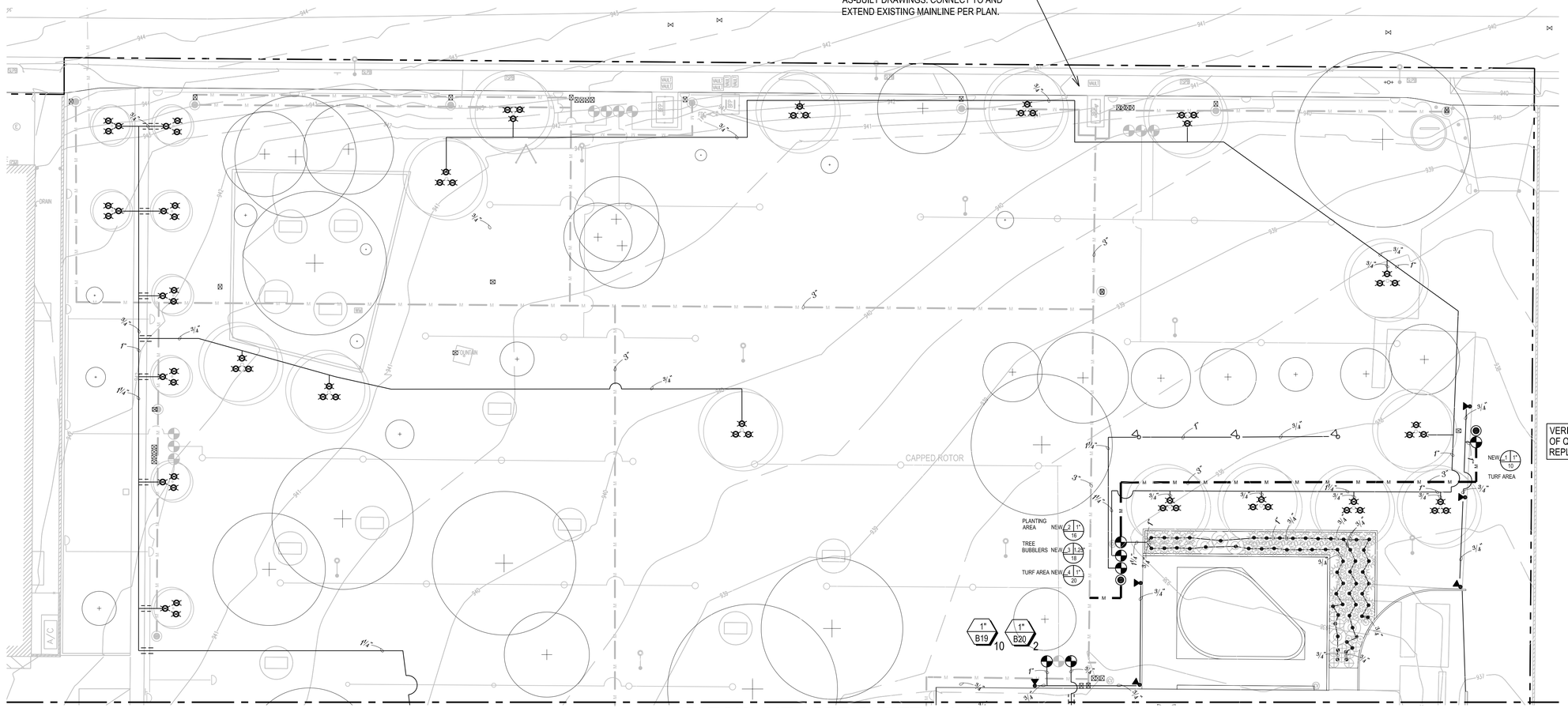

VERIFY EXISTING CONDITION OF QUICK COUPLER IN FIELD. REPLACE AS NECESSARY.

MATCHLINE - SEE SHEET L-1.02

POINT-OF-CONNECTION (EX.)

METER SIZE AND ELEVATION: Verify in field.
MAX FLOW: 21 GPM (New portion of system only)
Existing system High GPM not known.
STATIC PRESSURE (HIGH/LOW): 104/68
TOTAL SYSTEM NEEDS: 91 PSI (New portion of system only).
EXISTING SYSTEM PRESSURE: UNKNOWN
SOURCE AT LADWP: Water Distribution Engineering, (213) 367-0973
DATE INFO OBTAINED: 12 December 2018
THIS SYSTEM CONNECTS TO A POTABLE SOURCE.

NOTE TO CONTRACTOR:
THE NEW PORTIONS SHOWN IN THIS IRRIGATION PLAN CONNECT TO AN EXISTING IRRIGATION SYSTEM. MODIFICATIONS HAVE BEEN MADE TO THE 1986 AS-BUILT DRAWINGS. INFORMATION ABOUT THE EXISTING SYSTEM IS LIMITED. CONTRACTOR TO VERIFY ALL INFORMATION IN FIELD PRIOR TO & DURING CONSTRUCTION AND MAKE NOTATIONS ON THE AS-BUILTS (PER R.A.P. STANDARDS) FOR FUTURE REFERENCE.

CONTRACTOR IS RESPONSIBLE FOR ENSURING THE PROPER WORKING CONDITION OF ALL EXISTING IRRIGATION SYSTEMS BEING PROTECTED THROUGHOUT THE DURATION OF CONSTRUCTION ACTIVITIES. ANY LANDSCAPE (PLANTING) FAILURES THAT OCCUR AS A RESULT OF CONSTRUCTION ACTIVITES SHALL BE REPLACED IN-KIND AT NO ADDITIONAL COST TO THE CITY. CONTRACTOR TO PROVIDE TEMPORARY IRRIGATION TO PLANTING AREAS IF NECESSARY TO MAINTAIN THE HEALTH OF EXISTING PLANTS.

CONTROLLERS:
SEE SHEET L-1.02 FOR EXISTING CONTROLLER LOCATION. ALL NEW AND REUSED VALVES ARE TO BE CONNECTED TO EXISTING CALSENSE ET-1 CONTROLLER "A." VERIFY IN FIELD WITH PARK MAINTENANCE STAFF.

IRRIGATION MAINLINE NOTE:
MAINLINE IS SHOWN OUTSIDE OF LANDSCAPE AREAS FOR GRAPHIC CLARITY ONLY. MAINLINE SHALL BE INSTALLED WITHIN LANDSCAPE AREAS WHEREVER POSSIBLE. WHERE MAINLINE MUST RUN UNDER HARDSCAPE, INSTALL IN SLEEVING PER R.A.P. STANDARDS - REFER TO SPECIFICATIONS. SLEEVES SHALL BE TWICE THE DIAMETER OF THE MAINLINE PIPE MIN.

SEE SHEET L-1.50 FOR IRRIGATION NOTES

GENERAL VALVE/QUICK COUPLER NOTE:
CONTRACTOR SHALL NOT INSTALL ANY VALVES OR QUICK COUPLERS IN HARDSCAPE AREAS. CONTRACTOR SHALL INSTALL THESE ITEMS IN PLANTER AREAS ONLY.

SLEEVING NOTE:
CONTRACTOR TO TERMINATE ALL SLEEVES 3' BEYOND HARDSCAPE INTO PLANTER AREA (PER R.A.P. STANDARDS). NO SLEEVES TO BE TERMINATED UNDER HARDSCAPE. CONTRACTOR WILL BE RESPONSIBLE FOR VERIFYING LIMITS OF HARDSCAPE PRIOR TO INSTALLING SLEEVES.

NOTE:
CONTRACTOR IS RESPONSIBLE FOR MAINTAINING AN OPERATING IRRIGATION SYSTEM TO ALL EXISTING PLANTING AREAS FOR THE DURATION OF CONSTRUCTION. ANY PLANTS / LANDSCAPE THAT FAIL AS A RESULT OF LACK OF IRRIGATION SHALL BE REPLACED IN-KIND AT NO ADDITIONAL COST TO THE CITY.

PRESSURE REGULATOR:
PRESSURE REGULATING DEVICES ARE REQUIRED IF WATER PRESSURE IS BELOW OR EXCEEDS THE RECOMMENDED PRESSURE OF THE SPECIFIED IRRIGATION DEVICES.

A DIAGRAM OF THE IRRIGATIONS PLAN SHOWING HYDROZONES SHALL BE KEPT WITH THE IRRIGATION CONTROLLER FOR SUBSEQUENT MANAGEMENT PURPOSES.

NOTICE TO CONTRACTOR:
THE EXISTING IRRIGATION SYSTEM SHOWN IS A RECONSTRUCTION FROM "AS-BUILT" DRAWINGS DATED 1986 AND FIELD RESEARCH. CONTRACTOR TO VERIFY ALL IRRIGATION EQUIPMENT IN THE FIELD BEFORE THE START OF CONSTRUCTION. CONFIRM ALL VALVE NUMBERS AND PROTECT EXISTING WIRE FOR REUSE WHEN VALVE NUMBER IS REASSIGNED FOR A NEW INSTALLATION. WHEN AN IRRIGATION LINE IS COMPLETELY REMOVED DUE TO NEW CONSTRUCTION OR NEW HEADS ARE TO BE INSTALLED, THE EXISTING VALVE, VALVE BOX ARE TO BE REPLACED.

COORDINATE WITH CITY MAINTENANCE STAFF AS REQUIRED. ALL REMOVED IRRIGATION EQUIPMENT SHALL BE RETURNED TO THE CITY.

NOTE:
CONTRACTOR SHALL RUN ALL EXISTING IRRIGATION PRIOR TO COMMENCEMENT OF WORK AND MAKE NOTATIONS TO A CLEAN SET OF PLANS OF THE OPERATION AND SCHEMATICS OF THE EXISTING SYSTEM.

NOTE:
FOR PROJECTS THAT INCLUDE LANDSCAPE WORK, THE LANDSCAPE CERTIFICATION, FORM GRN 12, SHALL BE COMPLETED PRIOR TO FINAL INSPECTION APPROVAL.

NOTE:
AUTOMATIC LANDSCAPE IRRIGATORS SHALL BE INSTALLED IN SUCH A WAY THAT SPRAY DOES NOT IMPACT THE BUILDING.

CHECK VALVES OR ANTI-DRAIN VALVES ARE REQUIRED ON ALL SPRINKLER HEADS WHERE LOW POINT DRAINAGE COULD OCCUR.

AN IRRIGATION AUDIT REPORT SHALL BE COMPLETED AT THE TIME OF FINAL INSPECTION.

A CERTIFICATE OF COMPLETION SHALL BE FILLED OUT AND CERTIFED BY EITHER THE SIGNER OF THE LANDSCAPE PLANS, THE SIGNER OF THE IRRIGATION PLANS, OR THE LICENSED LANDSCAPE CONTRACTOR FOR THE PROJECT.

IRRIGATION LEGEND

SYMBOL	MANUFACTURER	MODEL	DESCRIPTION	DETAIL	REMARKS
	RAINBIRD	EFB-CB	BRASS REMOTE CONTROL VALVE, SIZE AS NOTED, INSTALL IN CITY STD. VALVE BOX	-	BRASS VALVE, WITH MANUAL BLEED VALVE ON VALVE BODY
	RAINBIRD	33DLRC	TWO PIECE QUICK COUPLING VALVE, WITH 44K KEY AND SH-1 HOSE SWIVEL. PROVIDE ONE QUICK COUPLER KEY AND HOSE SWIVEL FOR EACH FIVE QUICK COUPLERS INSTALLED, MINIMUM ONE QUICK COUPLER KEY. INSTALL IN CARSON VALVE BOX (OR EQUAL)	-	
	EXISTING	EXISTING	EXISTING CONTROLLER	-	
M	ANY APPROVED		PRESSURE PVC MAIN LINE - SCH. 40 PVC, SOLVENT WELD TO 3" DIAMETER PIPE. SEE PLAN FOR MAINLINE SIZE.	-	MINIMUM 30" OF COVER OVER THE TOP OF THE PIPE.
	ANY APPROVED	SCH. 40	NON-PRESSURE PVC LATERAL LINE, SOLVENT WELD, SEE PLAN FOR SIZE	-	MINIMUM 24" OF COVER OVER THE TOP OF THE PIPE.
	ANY APPROVED	SCH. 40	PVC SLEEVE UNDER PAVING. TWICE LINE SIZE MINIMUM CONTRACTOR TO SUPPLY PVC AND INSTALL SLEEVE UNDER ALL HARDSCAPE AND PAVING.	-	COVER DEPTH SHALL BE THE SAME AS THE MAINLINE OR LATERAL LINE.
WS	ANY APPROVED	-	PVC WIRE SLEEVE (4" MINIMUM) AND WIRE CONDUIT (LABELED) CONTRACTOR TO INSTALL ALL WIRE IN CONDUIT.	-	MINIMUM 24" OF COVER OVER THE TOP OF THE PIPE.

IRRIGATION LEGEND

SYMBOL	MANUFACTURER	MODEL	DESCRIPTION	RAD.	G.P.M.	PRECIP. RATE	SPACING	P.S.I.	DETAIL
	RAINBIRD	RWS-M-B-C-1402	ROOT ZONE WATERING SYSTEM	1'	.25		3/TREE	30	1
●	RAINBIRD	1401	FULL CIRCLE BUBBLER, INSTALLED ON RISER	1'	.25	.82 (S) / .95 (T)	1/SHRUB**	40	8
	RAINBIRD	F4-FC-SS AND F4-PC-SS	360° AND 180°, 90° ARC ROTORS	-	6.60 (F) 3.30 (H)/1.45 (Q)	.38	35'	40	14

NOTE: ARC AND RADIUS ADJUSTMENTS SHALL BE MADE AT EACH AND EVERY NOZZLE TO ACHIEVE THE BEST IRRIGATION EFFICIENCIES AND CONSERVATION STANDARDS.

NEW X 2" VALVE NUMBER * / VALVE SIZE / 62 GPM
NEW VALVE / NEW VALVE NUMBER

1" BX REPLACEMENT VALVE SIZE / EXISTING VALVE NUMBER / 00 GPM
REPLACED VALVE (EQUIPMENT) / MAINTAIN EX. VALVE NUMBER

* NEW VALVE NUMBERS ARE TO BE ASSIGNED IN SEQUENCE FOR CONTROLLER B. CONTRACTOR'S AS-BUILTS TO INDICATE FINAL "B" NUMBERS.

** AGAVES AND OTHER SMALLER PLANTS SHARE BUBBLER AS INDICATED.

0 10 20 40
1" = 20'

BUREAU OF ENGINEERING
OFFICIAL RECORD

DEPARTMENT OF PUBLIC WORKS
BUREAU OF ENGINEERING
ENGINEERING
CITY OF LOS ANGELES

NO.	REVISION DESCRIPTION	DATE	BY

BUILDING NO. -
INDEX NO. RP-300118

LICENSED LANDSCAPE ARCHITECT
GARY LEE MOORE
No. 3820
STATE OF CALIFORNIA
31 AUG 2021
Renewal date
31 AUG 2019

GARY LEE MOORE, PE, ENV SP
CITY ENGINEER

ARCHITECTURAL DIVISION	DATE:
ARCHITECT/ENGINEER: LACEY WITHERS LIC. NO.: CA 3820	3/03/2020
DESIGNED BY: LACEY WITHERS	3/03/2020
DRAWN BY: PN	3/03/2020
CHECKED BY: LW	3/03/2020
APPROVED BY: LW	3/03/2020

CITY OF LOS ANGELES
VERTICAL CONTROL:
HORIZONTAL CONTROL:
SHEET TITLE: IRRIGATION PLAN
PROJECT: GRANADA HILLS POOL AND BATHHOUSE REPLACEMENT PROJECT
ADDRESS: 16730 CHATSWORTH STREET GRANADA HILLS, CA 91344

BID SET
PROJECT ISSUE DATE: 06/22/21

WORK ORDER NO. #E170517
PLAN FILE NO. #308
DRAWING NO. L-1.01
SHEET O F SHEETS

PLOTTED: 6/26/2018 2:53:10 PM

THE CITY OF LOS ANGELES OR ITS OFFICERS OR AGENTS SHALL NOT BE RESPONSIBLE FOR THE ACCURACY OR COMPLETENESS OF ELECTRONIC COPIES OF THIS PLAN SHEET.
FILE PATH: BIM 360://Granada Hills Pool Renovation/A_Granada-Hills_2017.rvt
SHEET ISSUE DATE: 01/04/18
REVISION DATES (DESIGN STAGE ONLY)

IRRIGATION MAINLINE NOTE:
MAINLINE IS SHOWN OUTSIDE OF LANDSCAPE AREAS FOR GRAPHIC CLARITY ONLY. MAINLINE SHALL BE INSTALLED WITHIN LANDSCAPE AREAS WHEREVER POSSIBLE. WHERE MAINLINE MUST RUN UNDER HARDSCAPE, INSTALL IN SLEEVING PER R.A.P. STANDARDS - REFER TO SPECIFICATIONS. SLEEVES SHALL BE TWICE THE DIAMETER OF THE MAINLINE PIPE MIN.

SEE SHEET L-1.50 FOR IRRIGATION NOTES

GENERAL VALVE/QUICK COUPLER NOTE:
CONTRACTOR SHALL NOT INSTALL ANY VALVES OR QUICK COUPLERS IN HARDSCAPE AREAS. CONTRACTOR SHALL INSTALL THESE ITEMS IN PLANTER AREAS ONLY.

SLEEVING NOTE:
CONTRACTOR TO TERMINATE ALL SLEEVES 3' BEYOND HARDSCAPE INTO PLANTER AREA (PER R.A.P. STANDARDS). NO SLEEVES TO BE TERMINATED UNDER HARDSCAPE. CONTRACTOR WILL BE RESPONSIBLE FOR VERIFYING LIMITS OF HARDSCAPE PRIOR TO INSTALLING SLEEVES.

NOTE:
CONTRACTOR IS RESPONSIBLE FOR MAINTAINING AN OPERATING IRRIGATION SYSTEM TO ALL EXISTING PLANTING AREAS FOR THE DURATION OF CONSTRUCTION. ANY PLANTS / LANDSCAPE THAT FAIL AS A RESULT OF LACK OF IRRIGATION SHALL BE REPLACED IN-KIND AT NO ADDITIONAL COST TO THE CITY.

PRESSURE REGULATOR:
PRESSURE REGULATING DEVICES ARE REQUIRED IF WATER PRESSURE IS BELOW OR EXCEEDS THE RECOMMENDED PRESSURE OF THE SPECIFIED IRRIGATION DEVICES.

A DIAGRAM OF THE IRRIGATIONS PLAN SHOWING HYDROZONES SHALL BE KEPT WITH THE IRRIGATION CONTROLLER FOR SUBSEQUENT MANAGEMENT PURPOSES.

NOTICE TO CONTRACTOR:
THE EXISTING IRRIGATION SYSTEM SHOWN IS A RECONSTRUCTION FROM "AS-BUILT" DRAWINGS DATED 1986 AND FIELD RESEARCH. CONTRACTOR TO VERIFY ALL IRRIGATION EQUIPMENT IN THE FIELD BEFORE THE START OF CONSTRUCTION. CONFIRM ALL VALVE NUMBERS AND PROTECT EXISTING WIRE FOR REUSE WHEN VALVE NUMBER IS REASSIGNED FOR A NEW INSTALLATION. WHEN AN IRRIGATION LINE IS COMPLETELY REMOVED DUE TO NEW CONSTRUCTION OR NEW HEADS ARE TO BE INSTALLED, THE EXISTING VALVE, VALVE BOX ARE TO BE REPLACED.

COORDINATE WITH CITY MAINTENANCE STAFF AS REQUIRED. ALL REMOVED IRRIGATION EQUIPMENT SHALL BE RETURNED TO THE CITY.

NOTE:
CONTRACTOR SHALL RUN ALL EXISTING IRRIGATION PRIOR TO COMMENCEMENT OF WORK AND MAKE NOTATIONS TO A CLEAN SET OF PLANS OF THE OPERATION AND SCHEMATICS OF THE EXISTING SYSTEM.

NOTE:
FOR PROJECTS THAT INCLUDE LANDSCAPE WORK, THE LANDSCAPE CERTIFICATION, FORM GRN 12, SHALL BE COMPLETED PRIOR TO FINAL INSPECTION APPROVAL.

NOTE:
AUTOMATIC LANDSCAPE IRRIGATORS SHALL BE INSTALLED IN SUCH A WAY THAT SPRAY DOES NOT IMPACT THE BUILDING.

CHECK VALVES OR ANTI-DRAIN VALVES ARE REQUIRED ON ALL SPRINKLER HEADS WHERE LOW POINT DRAINAGE COULD OCCUR.

AN IRRIGATION AUDIT REPORT SHALL BE COMPLETED AT THE TIME OF FINAL INSPECTION.

A CERTIFICATE OF COMPLETION SHALL BE FILLED OUT AND CERTIFIED BY EITHER THE SIGNER OF THE LANDSCAPE PLANS, THE SIGNER OF THE IRRIGATION PLANS, OR THE LICENSED LANDSCAPE CONTRACTOR FOR THE PROJECT.

IRRIGATION LEGEND

SYMBOL	MANUFACTURER	MODEL	DESCRIPTION	DETAIL	REMARKS
	RAINBIRD	EFB-CB	BRASS REMOTE CONTROL VALVE, SIZE AS NOTED, INSTALL IN CITY STD. VALVE BOX	-	BRASS VALVE, WITH MANUAL BLEED VALVE ON VALVE BODY
	RAINBIRD	33DLRC	TWO PIECE QUICK COUPLING VALVE, WITH 44K KEY AND SH-1 HOSE SWIVEL. PROVIDE ONE QUICK COUPLER KEY AND HOSE SWIVEL FOR EACH FIVE QUICK COUPLERS INSTALLED, MINIMUM ONE QUICK COUPLER KEY. INSTALL IN CARSON VALVE BOX (OR EQUAL)	-	
	EXISTING	EXISTING	EXISTING CONTROLLER	-	
M	ANY APPROVED		PRESSURE PVC MAIN LINE - SCH. 40 PVC, SOLVENT WELD TO 3" DIAMETER PIPE. SEE PLAN FOR MAINLINE SIZE.	-	MINIMUM 30" OF COVER OVER THE TOP OF THE PIPE.
	ANY APPROVED	SCH. 40	NON-PRESSURE PVC LATERAL LINE, SOLVENT WELD, SEE PLAN FOR SIZE	-	MINIMUM 24" OF COVER OVER THE TOP OF THE PIPE.
	ANY APPROVED	SCH. 40	PVC SLEEVE UNDER PAVING. TWICE LINE SIZE MINIMUM CONTRACTOR TO SUPPLY PVC AND INSTALL SLEEVE UNDER ALL HARDSCAPE AND PAVING.	-	COVER DEPTH SHALL BE THE SAME AS THE MAINLINE OR LATERAL LINE.
WS	ANY APPROVED	-	PVC WIRE SLEEVE (4" MINIMUM) AND WIRE CONDUIT (LABELED) CONTRACTOR TO INSTALL ALL WIRE IN CONDUIT.	-	MINIMUM 24" OF COVER OVER THE TOP OF THE PIPE.

IRRIGATION LEGEND

SYMBOL	MANUFACTURER	MODEL	DESCRIPTION	RAD.	G.P.M.	PRECIP. RATE	SPACING	P.S.I.	DETAIL
	RAINBIRD	RWS-M-B-C-1402	ROOT ZONE WATERING SYSTEM	1'	.25		3/TREE	30	1
	RAINBIRD	1401	FULL CIRCLE BUBBLER, INSTALLED ON RISER	1'	.25	.82 (S) / .95 (T)	1/SHRUB**	40	8
	RAINBIRD	F4-FC-SS AND F4-PC-SS	360° AND 180°, 90° ARC ROTORS	-	6.60 (F) 3.30 (H)/1.45 (Q)	.38	35'	40	14

NOTE: ARC AND RADIUS ADJUSTMENTS SHALL BE MADE AT EACH AND EVERY NOZZLE TO ACHIEVE THE BEST IRRIGATION EFFICIENCIES AND CONSERVATION STANDARDS.

NEW X 2" 62 — VALVE NUMBER * / VALVE SIZE / GPM

NEW VALVE / NEW VALVE NUMBER

1" BX 00 — REPLACEMENT VALVE SIZE / EXISTING VALVE NUMBER / GPM

REPLACED VALVE (EQUIPMENT) / MAINTAIN EX. VALVE NUMBER

* NEW VALVE NUMBERS ARE TO BE ASSIGNED IN SEQUENCE FOR CONTROLLER B. CONTRACTOR'S AS-BUILTS TO INDICATE FINAL "B" NUMBERS.

** AGAVES AND OTHER SMALLER PLANTS SHARE BUBBLER AS INDICATED.

BUREAU OF ENGINEERING — OFFICIAL RECORD

MATCHLINE - SEE SHEET L-1.01

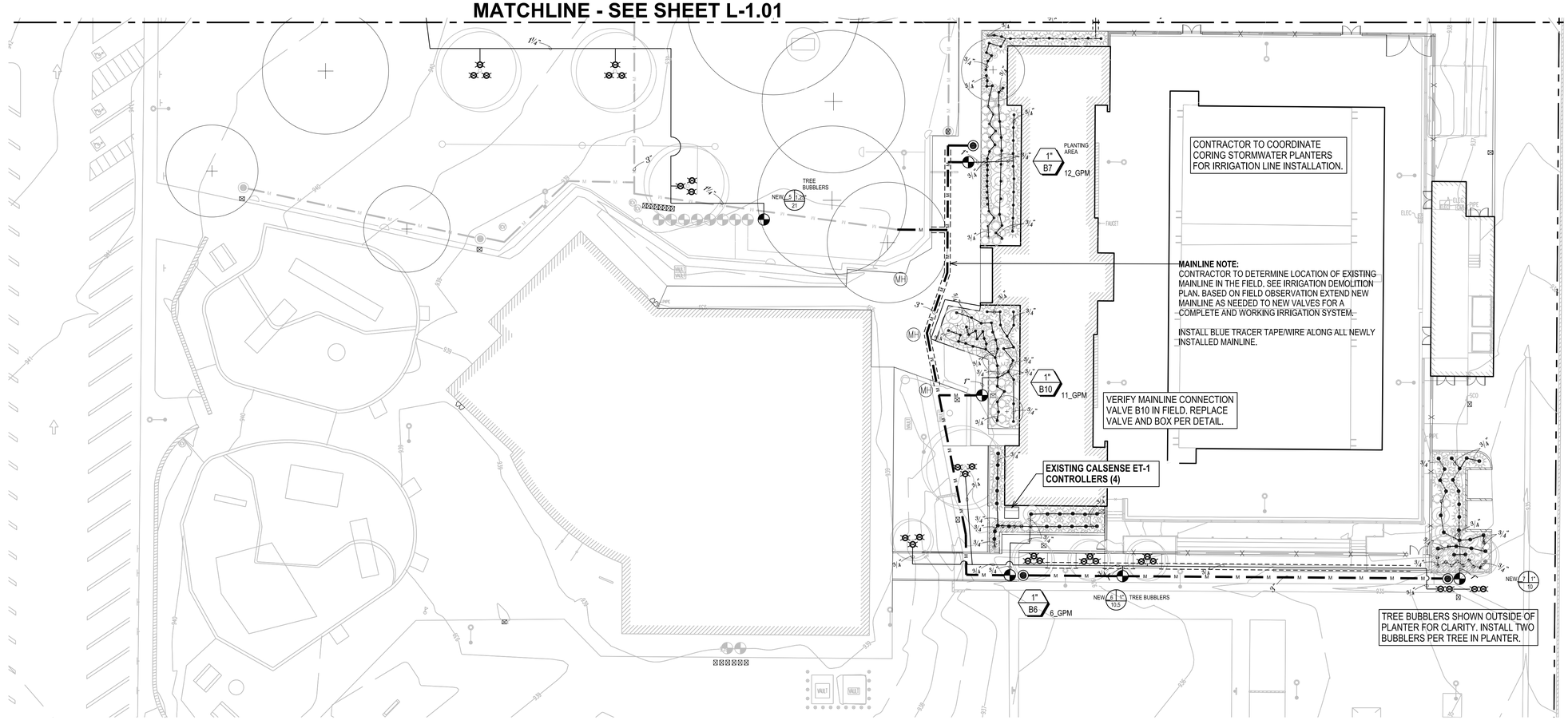

0 10 20 40 — 1" = 20'

WITHERS & SANDGREN
LANDSCAPE ARCHITECTURE + PLANNING
20948 TULSA STREET CHATSWORTH, CA 91021-0276
(818) 291-0200 lacey@withersandsandgren.com

REVISION DATES (DESIGN STAGE ONLY)

THE CITY OF LOS ANGELES OR ITS OFFICERS OR AGENTS SHALL NOT BE RESPONSIBLE FOR THE ACCURACY OR COMPLETENESS OF ELECTRONIC COPIES OF THIS PLAN SHEET.

FILE PATH: BIM 360://Granada Hills Pool Renovation/A_Granada-Hills_2017.rvt

SHEET ISSUE DATE: 01/04/18

ENGINEERING — CITY OF LOS ANGELES

BUREAU OF ENGINEERING

NO.	REVISION DESCRIPTION	DATE	BY

BUILDING NO. -

INDEX NO. RP-300118

LICENSED LANDSCAPE ARCHITECT — GARY L. MOORE — No. 3820 — 31 AUG 2021 — Renewal Date 3 MAR 2019 — STATE OF CALIFORNIA

DEPARTMENT OF PUBLIC WORKS — CITY OF LOS ANGELES

GARY LEE MOORE, PE, ENV SP — CITY ENGINEER

	DATE:
ARCHITECTURAL DIVISION	
ARCHITECT/ENGINEER: LACEY WITHERS	LIC. NO.: CA 3820
DESIGNED BY: LACEY WITHERS	3/03/2020
DRAWN BY: PN	3/03/2020
CHECKED BY: LW	3/03/2020
APPROVED BY: LW	3/03/2020

VERTICAL CONTROL:
HORIZONTAL CONTROL:

SHEET TITLE: IRRIGATION PLAN

PROJECT: GRANADA HILLS POOL AND BATHHOUSE REPLACEMENT PROJECT

ADDRESS: 16730 CHATSWORTH STREET GRANADA HILLS, CA 91344

BID SET
PROJECT ISSUE DATE: 06/22/21

WORK ORDER NO. #E170517
PLAN FILE NO. #308
DRAWING NO. L-1.02
SHEET OF SHEETS

PLOTTED: 6/26/2018 2:53:10 PM

1. THIS DESIGN IS DIAGRAMMATIC. ALL PIPING, VALVES, ETC. SHOWN WITHIN PAVED AREAS ARE FOR DESIGN CLARIFICATION ONLY AND SHALL BE INSTALLED IN PLANTING AREAS WHEREVER POSSIBLE.
2. SET ALL VALVES NEXT TO WALKS OR PAVED SURFACES - WHERE POSSIBLE, BUT SCREEN FROM VIEW. FINAL LOCATION TO BE APPROVED BY LANDSCAPE ARCHITECT & PROJECT MANAGER.
3. ALL TURF SPRINKLER HEADS ARE TO HAVE TRIPLE SWING JOINTS. ALL OTHER SHALL HAVE DOUBLE SWING JOINTS. PIPE SIZES SHALL CONFORM TO THOSE SHOWN ON THE DRAWINGS. NO SUBSTITUTIONS OF SMALLER PIPE SIZES SHALL BE PERMITTED, BUT SUBSTITUTIONS OF LARGER SIZES MAY BE APPROVED. ALL DAMAGED AND REJECTED PIPE SHALL BE REMOVED FROM THE SITE AT THE TIME OF THE SAID REJECTION.
4. FINAL LOCATION OF THE AUTOMATIC CONTROLLERS SHALL BE DETERMINED ON SITE WITH PROJECT MANAGER / OWNER'S REPRESENTATIVE. POWER TO CONTROLLER SHALL BE COORDINATED.
5. BEFORE COMMENCING ANY EXCAVATION, THE CONTRACTOR SHALL OBTAIN AN UNDERGROUND SERVICE ALERT I.D. NUMBER BY CALLING 1-800-422-4133. TWO (2) WORKING DAYS SHALL BE ALLOWED AFTER THE I.D.NUMBER IS OBTAINED AND BEFORE THE EXCAVATION WORK IS STARTED SO THAT UTILITY OWNERS CAN BE NOTIFIED.
6. ALL SPRINKLER HEADS SHALL BE SET PERPENDICULAR TO FINISH GRADE UNLESS OTHERWISE SPECIFIED.
7. THE CONTRACTOR SHALL FLUSH AND ADJUST ALL VALVES, SPRINKLER HEADS AND OTHER EMISSION DEVICES FOR OPTIMUM COVERAGE WITH ZERO OVER SPRAY ONTO IMPERVIOUS MATERIALS (WALKS, STREETS, ETC).
8. IT IS THE RESPONSIBILITY OF THE IRRIGATION CONTRACTOR TO FAMILIARIZE HIMSELF WITH THE GRADE DIFFERENCES, LOCATION OF WALLS, OBSTACLES, AND UTILITIES. THE IRRIGATION CONTRACTOR SHALL REPAIR OR REPLACE ALL ITEMS DAMAGED BY HIS WORK. CONTRACTOR SHALL COORDINATE THEIR WORK WITH OTHER CONTRACTORS FOR THE LOCATION AND INSTALLATION OF PIPE SLEEVES AND LATERALS UNDER ROADWAYS AND PAVING, ETC.
9. THE NEW PORTION OF THE SPRINKLER SYSTEM DESIGN (THE CURRENT SCOPE OF WORK) IS BASED ON A SYSTEM DESIGN PRESSURE OF (TBD) P.S.I. AND A MAXIMUM FLOW DEMAND OF 16 G.P.M. THE CONTRACTOR SHALL VERIFY WATER PRESSURES PRIOR TO CONSTRUCTION. REPORT ANY DIFFERENCE BETWEEN WATER PRESSURE INDICATED ON THE DRAWINGS AND THE ACTUAL PRESSURE READING AT THE IRRIGATION POINT OF CONNECTION TO THE LANDSCAPE ARCHITECT.
10. DO NOT WILLFULLY INSTALL THE SPRINKLER SYSTEM AS SHOWN ON THE DRAWINGS WHEN IT IS OBVIOUS IN THE FIELD THAT THERE ARE UNKNOWN OBSTRUCTIONS OR GRADE DIFFERENCES IN THE AREA. DIMENSIONS EXIST THAT MIGHT NOT HAVE BEEN CONSIDERED IN THE ENGINEERING. SUCH OBSTRUCTIONS OR DIFFERENCES SHOULD BE BROUGHT TO THE ATTENTION OF THE LANDSCAPE ARCHITECT. THE CONTRACTOR SHALL ASSUME FULL RESPONSIBILITY FOR ANY NECESSARY REVISIONS.
11. ALL SPRINKLER EQUIPMENT NOT OTHERWISE DETAILED OR SPECIFIED SHALL BE INSTALLED AS PER MANUFACTURER'S RECOMMENDATIONS AND SPECIFICATIONS.
12. THE INTENT OF THE DESIGN IS TO PROVIDE FULL COVERAGE TO PLANTING AREAS. HEADS SHALL BE PLACED TO PROVIDE 120% COVERAGE, MIN. AS PART OF THE SCOPE OF WORK, PROVIDE ANY ADDITIONAL HEADS, SPECIAL NOZZLES, OR PATTERNS TO ACHIEVE PROPER COVERAGE WITH ZERO OVER SPRAY (RESULTING IN RUNOFF) AT NO ADDITIONAL COST TO THE OWNER.
13. INSTALLATION FOR THE CONTROL WIRES SHALL FOLLOW MAINLINE ROUTING. NEW WIRING SHALL BE PLACED IN CONDUIT.
14. PROVIDE SLEEVES WHERE REQUIRED. USE MIN. 4" DIAMETER SCH. 80 P.V.C., SEE DETAIL FOR DEPTH.
15. LOCATE "AS-BUILT" VALVE CHART IN EACH CONTROLLER - REDUCE AND ENCASE IN PLASTIC.
16. THE CONTRACTOR SHALL GUARANTEE THE INSTALLED IRRIGATION SYSTEM FOR A PERIOD OF ONE (1) YEAR FROM THE DATE OF ACCEPTANCE OF THE WORK. SHOULD ANY TROUBLE DEVELOP WITHIN THE TIME SPECIFIED DUE TO INFERIOR OR FAULTY MATERIAL OR WORKMANSHIP, THE TROUBLE SHALL BE CORRECTED BY THE CONTRACTOR WITHOUT EXPENSE TO THE OWNER.
17. REFER TO GENERAL NOTES FOR ADDITIONAL INFORMATION REGARDING THIS SECTION OF WORK.
18. WHEN INSTALLATION OF THE IRRIGATION SYSTEM IS COMPLETED, PERFORM A COVERAGE TEST IN THE PRESENCE OF OWNER'S REPRESENTATIVE AND LANDSCAPE ARCHITECT TO DETERMINE THAT COVERAGE FOR PLANTING AND TURF AREAS IS COMPLETE AND ADEQUATE. WHERE INADEQUATE COVERAGE OCCURS, THE IRRIGATION CONTRACTOR SHALL PROVIDE NECESSARY MATERIAL AND PERFORM WORK TO CORRECT ALL INADEQUACIES WITHOUT ADDITIONAL COST. THESE TESTS AND CORRECTIONS SHALL BE ACCOMPLISHED BEFORE ANY SHRUBS, GROUND COVER OR TURF IS PLANTED.
19. CONTRACTOR IS RESPONSIBLE FOR ADDING CHECK VALVES AS NECESSARY TO PREVENT LOW HEAD DRAINAGE.

9 IRRIGATION NOTES

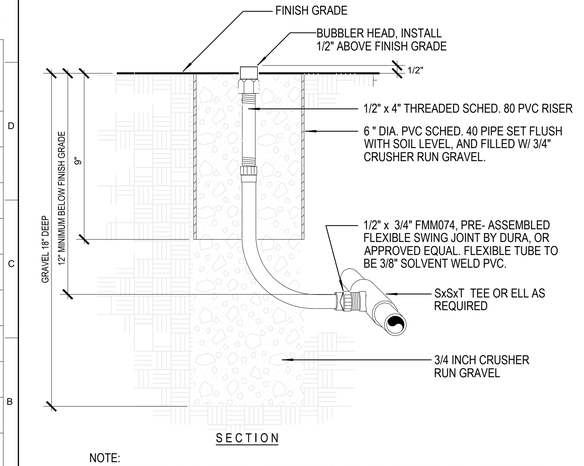

SECTION

NOTE:
1. USE PIPE TEFLON TAPE ON ALL PIPE THREADS. TIGHTEN THREADS UNTIL MODERATELY SNUG (DO NOT OVERTIGHTEN).

	PLANT BUBBLER	
N.T.S.		

10 POINT SOURCE BUBBLER

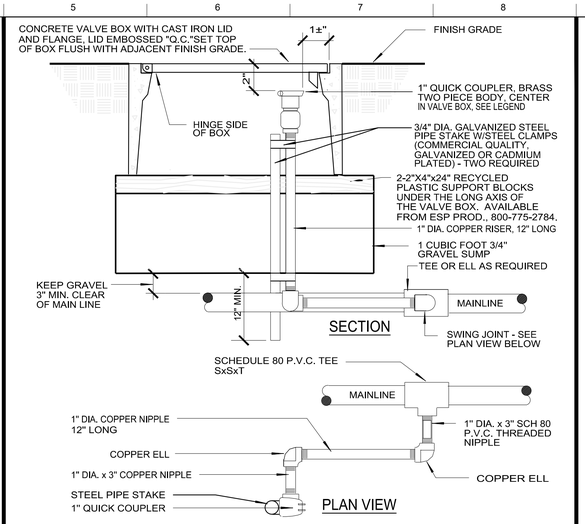

PLAN VIEW

--	□UICK COUPLER INSTALLATION	
N.T.S.		RP DETAIL 120

6 □UICK COUPLER

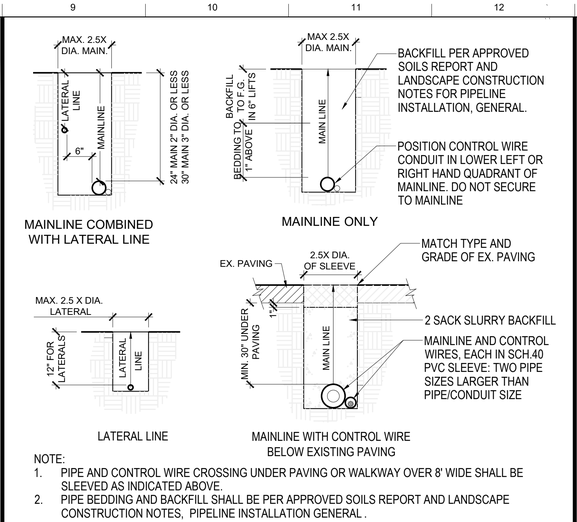

NOTE:
1. PIPE AND CONTROL WIRE CROSSING UNDER PAVING OR WALKWAY OVER 8' WIDE SHALL BE SLEEVED AS INDICATED ABOVE.
2. PIPE BEDDING AND BACKFILL SHALL BE PER APPROVED SOILS REPORT AND LANDSCAPE CONSTRUCTION NOTES, PIPELINE INSTALLATION GENERAL .

	IRRIGATION TRENCHING DETAIL	
N.T.S.	BOE VERSION JUN/18	RP DETAIL 1350

3 TRENCHING

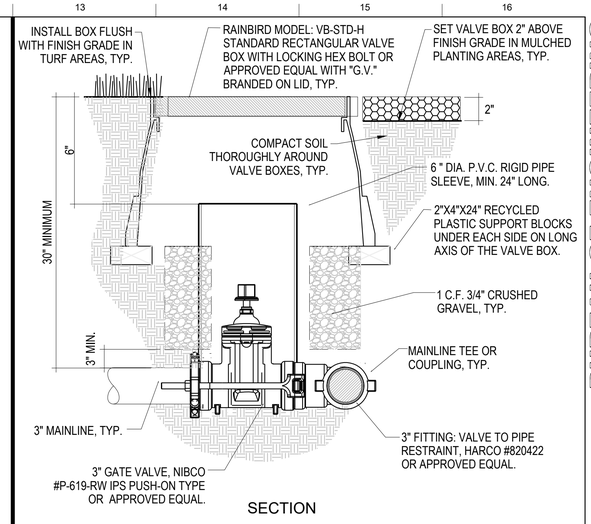

SECTION

	3" MAINLINE ISOLATION VALVE	
N.T.S.	BOE VERSION Ma□/17 - RF/□□	RP DETAIL L1101

1 ISOLATION VALVE

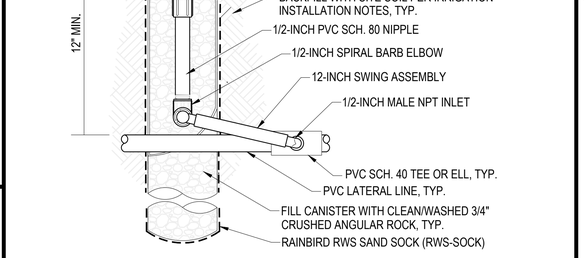

	ROOT WATERING SYSTEM BUBBLER ASSEMBLY	
N.T.S.	BOE VERSION Se□/07 - RF	RAP DETAIL L1660

7 TREE BUBBLER

8 TREE BUBBLER LAYOUT

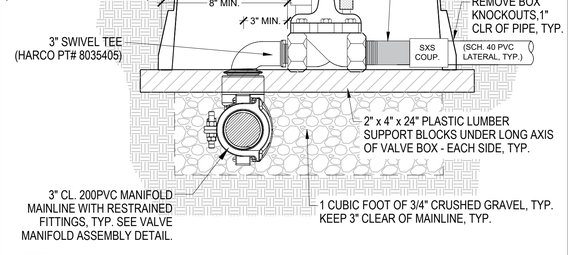

NOTES:
1. SEE APPLICABLE DETAILS FOR 2-WIRE DECODER AND CABLE INSTALLATION

8/9/18 GM

	RCV INSTALLATION DETAIL, 2-WIRE SYSTEM	
N.T.S.		RP DETAIL 1402

4 REMOTE CONTROL VALVE

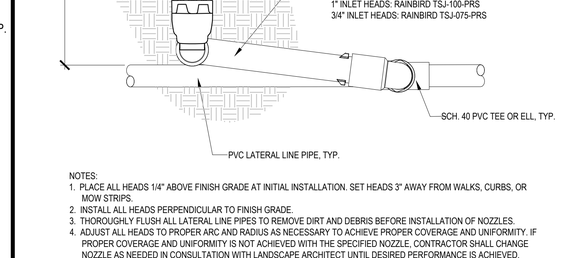

NOTES:
1. PLACE ALL HEADS 1/4" ABOVE FINISH GRADE AT INITIAL INSTALLATION. SET HEADS 3" AWAY FROM WALKS, CURBS, OR MOW STRIPS.
2. INSTALL ALL HEADS PERPENDICULAR TO FINISH GRADE.
3. THOROUGHLY FLUSH ALL LATERAL LINE PIPES TO REMOVE DIRT AND DEBRIS BEFORE INSTALLATION OF NOZZLES.
4. ADJUST ALL HEADS TO PROPER ARC AND RADIUS AS NECESSARY TO ACHIEVE PROPER COVERAGE AND UNIFORMITY. IF PROPER COVERAGE AND UNIFORMITY IS NOT ACHIEVED WITH THE SPECIFIED NOZZLE, CONTRACTOR SHALL CHANGE NOZZLE AS NEEDED IN CONSULTATION WITH LANDSCAPE ARCHITECT UNTIL DESIRED PERFORMANCE IS ACHIEVED.

REVISED: 6/14/06 RWF/SLG

--	GEAR-DRIVEN ROTOR HEAD INSTALLATION	
N.T.S.		RP DETAIL 162

2 ROTOR

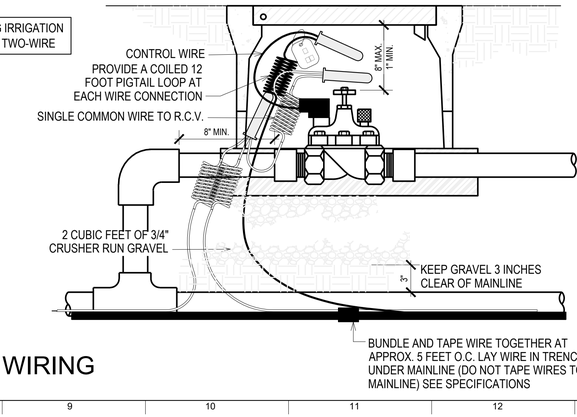

5 RCV WIRING

BUREAU OF ENGINEERING
OFFICIAL RECORD

WITHERS & SANDGREN
LANDSCAPE ARCHITECTURE + PLANNING
20948 TULSA STREET CHATSWORTH, CA 91021-0276 (818) 291-0200 lacey@withersandsgren.com

BID SET
PROJECT ISSUE DATE: 06/22/21

VERTICAL CONTROL:
HORIZONTAL CONTROL:

SHEET TITLE: IRRIGATION DETAILS

PROJECT: GRANADA HILLS POOL AND BATHHOUSE REPLACEMENT PROJECT

ADDRESS: 16730 CHATSWORTH STREET GRANADA HILLS, CA. 91344

WORK ORDER NO. #E170517

PLAN FILE NO. #308

DRAWING NO. L-1.50

SHEET OF SHEETS

PLOTTED: 6/26/2018 2:53:10 PM

DEPARTMENT OF PUBLIC WORKS
CITY OF LOS ANGELES

GARY LEE MOORE, PE, ENV SP
CITY ENGINEER

ARCHITECTURAL DIVISION

ARCHITECT/ENGINEER:	LACEY WITHERS	LIC. NO.: CA 3820
DESIGNED BY:	LACEY WITHERS	DATE: 3/03/2020
DRAWN BY:	PN	3/03/2020
CHECKED BY:	LW	3/03/2020
APPROVED BY:	LW	3/03/2020

BUREAU OF ENGINEERING
CITY OF LOS ANGELES
ENGINEERING

NO.	REVISION DESCRIPTION	DATE	BY

BUILDING NO. -

INDEX NO. RP-300118

LICENSED LANDSCAPE ARCHITECT RENEWAL 31 AUG 2021 Expires 3 MAR 2019 STATE OF CALIFORNIA

THE CITY OF LOS ANGELES OR ITS OFFICERS OR AGENTS SHALL NOT BE RESPONSIBLE FOR THE ACCURACY OR COMPLETENESS OF ELECTRONIC COPIES OF THIS PLAN SHEET.

REVISION DATES (VERSION STAGE ONLY!)

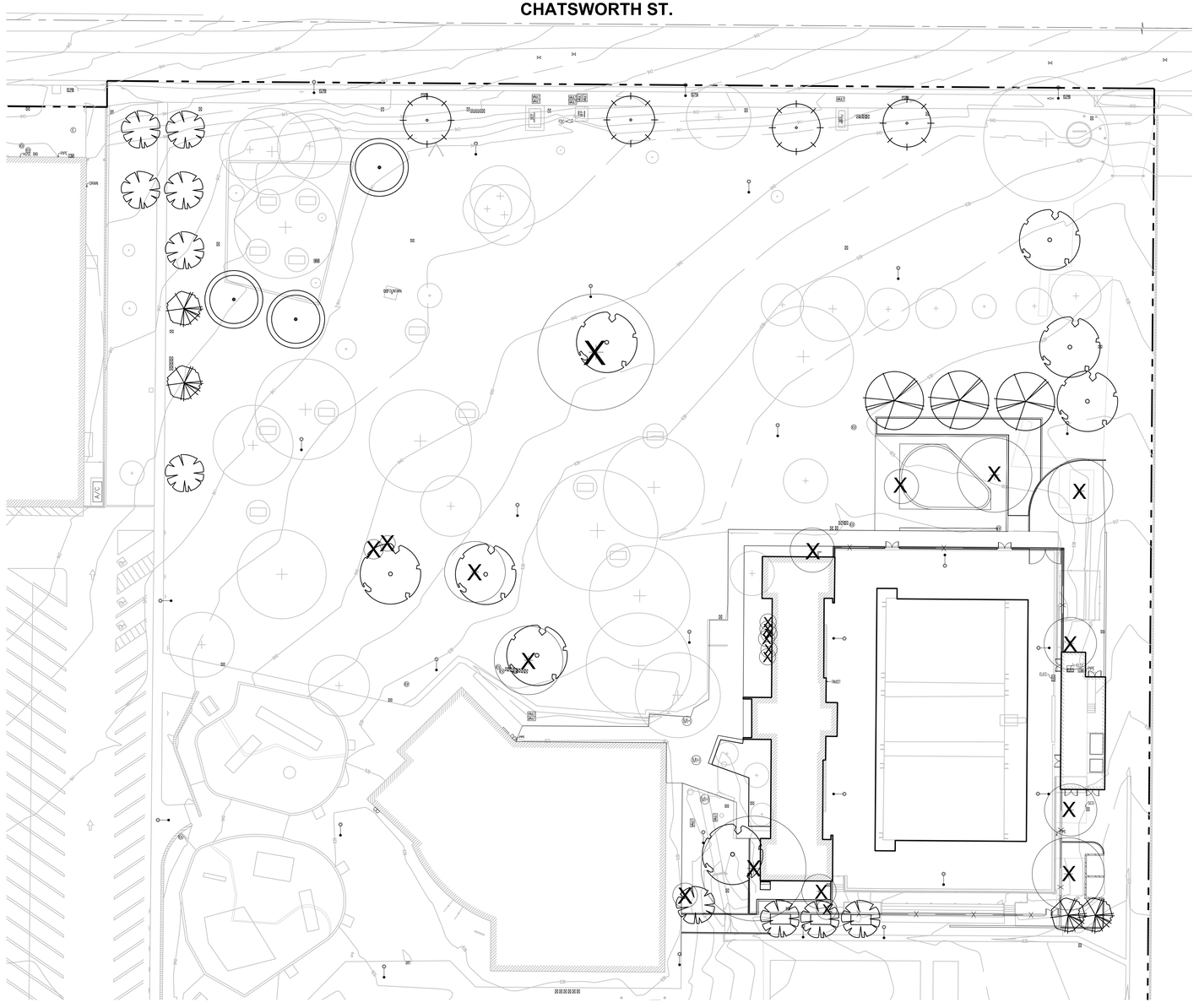
CHATSWORTH ST.
X
X
X

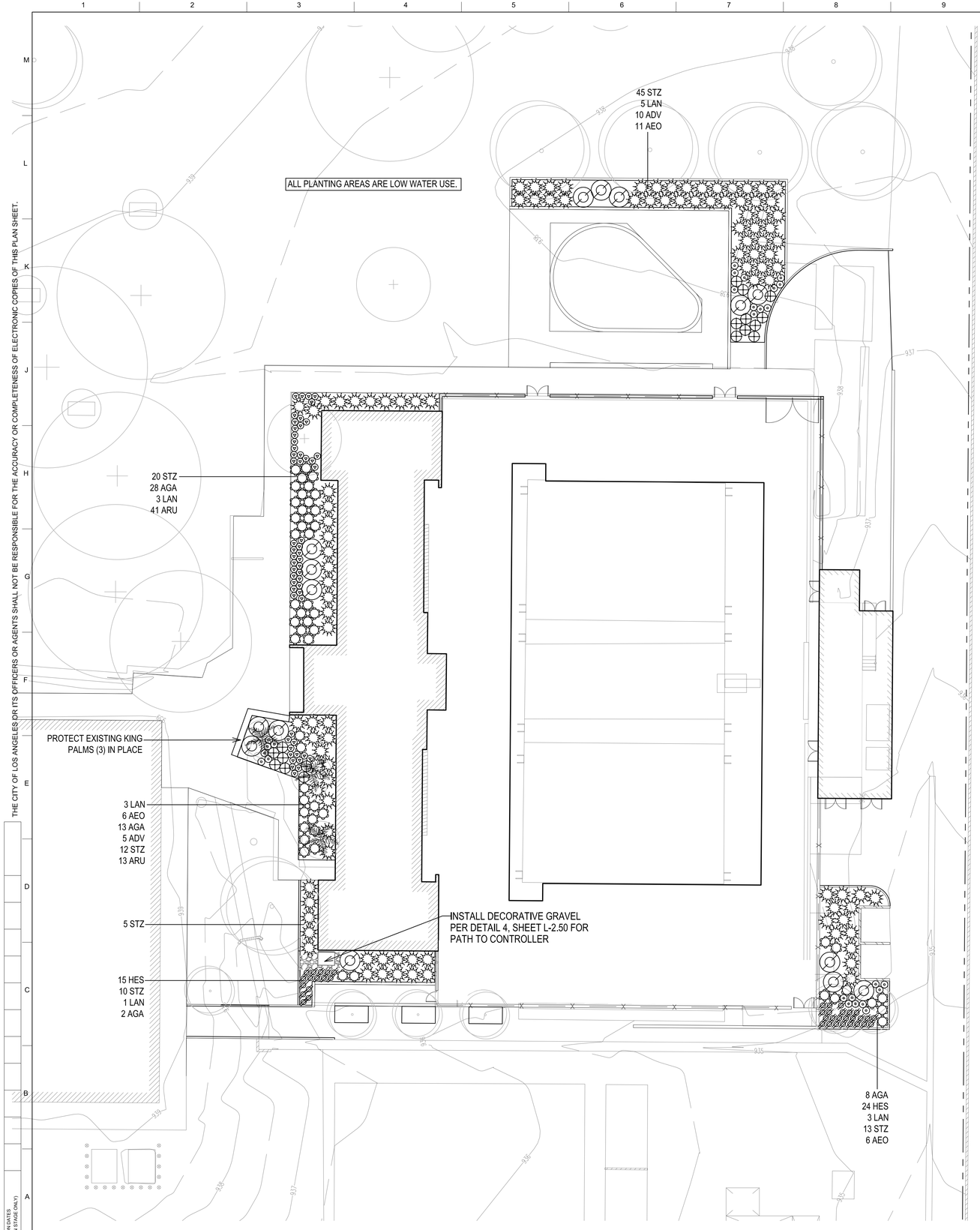

PLANTING LEGEND

SYM	BOTANICAL / COMMON NAME	SIZE	WUCALS	QTY.	NOTES
	ARCHONTOPHOENIX CUNNINGHAMIANA / KING PALM				EXISTING
LAN	LANTANA 'NEW GOLD' / YELLOW LANTANA	5 GAL	L	15	6'-0" O.C. DWARF FORM
STZ	STRELITZIA REGINAE / BIRD OF PARADISE	5 GAL	M	105	4'-0" O.C.
AEO	AEONIUM DECORUM 'SUNBURST' /	1 GAL	L	23	2'-0" O.C. MULTI-COLOR
AGA	AGAVE ATTENUATA / FOXTAIL AGAVE	5 GAL	L	51	4'-0" O.C.
ADV	AGAVE DESNETTIANA 'VARIEGATA' / VARIGATED AGAVE	5 GAL	L	15	4'-0" O.C. MEDIUM SIZE, YELLOW STRIPE
HES	HESPERALOE PARVIFOLIA / RED YUCCA	1 GAL	L	39	3'-0" O.C.
ARU	ALOE RUDIIKOPPE / LITTLE GEM ALOE	1 GAL	L	54	2'-0" O.C.
	3/4" DECORATIVE GRAVEL, BARK BROWN				AVAILABLE FROM SUNBURST DECORATIVE STONE, (626) 446-4994

SEE PLANTING NOTES ON SHEET L-2.50.

FOR SOILS WITH LESS THAN 6% ORGANIC MATERIAL IN THE TOP 6 INCHES OF SOIL, COMPOST AT A RATE OF A MINIMUM OF FOUR CUBIC YARDS PER 1,000 SQUARE FEET OF PERMEABLE AREA SHALL BE INCORPORATED TO A DEPTH OF SIX (6) INCHES INTO THE SOIL.

A MINIMUM 3-INCH LAYER OF MULCH SHALL BE APPLIED ON ALL EXPOSED SOIL SURFACES OF PLANTING AREAS, EXCEPT TURF AREAS, CREEPING OR ROOTING GROUND COVERS, OR DIRECT SEEDING APPLICATIONS WHERE THE MULCH IS CONTRAINDICATED.

BUREAU OF ENGINEERING
OFFICIAL RECORD

0 8 16 32
1" = 16'

20948 TULSA STREET
CHATSWORTH, CA 91021-0276
(818) 291-0200
lacey@withersandsandgren.com

THE CITY OF LOS ANGELES OR ITS OFFICERS OR AGENTS SHALL NOT BE RESPONSIBLE FOR THE ACCURACY OR COMPLETENESS OF ELECTRONIC COPIES OF THIS PLAN SHEET.

FILE PATH: BIM 360://Granada Hills Pool Renovation/A_Granada-Hills_2017.rvt

SHEET ISSUE DATE: 01/04/18

REVISION DATES (DESIGN STAGE ONLY)

BID SET
PROJECT ISSUE DATE: 06/22/21

CITY OF LOS ANGELES

DEPARTMENT OF PUBLIC WORKS

BUREAU OF ENGINEERING

ENGINEERING
CITY OF LOS ANGELES

NO.	REVISION DESCRIPTION	DATE	BY

INDEX NO. RP-300118

BUILDING NO. -

LICENSED LANDSCAPE ARCHITECT
LACEY M. WITHERS
Signature
31 AUG 2021
Renewal Date
3 MAR 2019
Date
STATE OF CALIFORNIA

GARY LEE MOORE, PE, ENV SP
CITY ENGINEER
ARCHITECTURAL DIVISION

		DATE:
ARCHITECT/ENGINEER:	LACEY WITHERS LIC. NO.: CA 3820	3/03/2020
DESIGNED BY:	LACEY WITHERS	3/03/2020
DRAWN BY:	PN	3/03/2020
CHECKED BY:	LW	3/03/2020
APPROVED BY:	LW	3/03/2020

VERTICAL CONTROL:
HORIZONTAL CONTROL:

SHRUB PLANTING PLAN

SHEET TITLE:

PROJECT: GRANADA HILLS POOL AND BATHHOUSE REPLACEMENT PROJECT

ADDRESS: 16730 CHATSWORTH STREET GRANADA HILLS, CA 91344

WORK ORDER NO. #E170517

PLAN FILE NO. #308

DRAWING NO. L-2.01

SHEET OF SHEETS

PLOTTED: 6/26/2018 2:53:10 PM

1. THE PLAN(S) ARE DIAGRAMMATIC. THE CONTRACTOR SHALL VERIFY EXISTING CONDITIONS AND NOTIFY THE PROJECT ENGINEER/LANDSCAPE ARCHITECT OF ANY DISCREPANCIES PRIOR TO THE START OF WORK.
2. CLEARING AND GRUBBING:
THE CONTRACTOR SHALL CLEAR AND GRUB ALL IMPROVEMENT AREAS PRIOR TO THE INSTALLATION OF THE IRRIGATION SYSTEM. SEE SPECIFICATIONS.
3. TOPSOIL/SOILS REPORT:
THE CONTRACTOR SHALL OBTAIN AN AGRICULTURAL SUITABILITY REPORT FOR THE ON-SITE SOIL. TAKE A MINIMUM OF 3 TEST SAMPLES AS DIRECTED BY THE CITY LANDSCAPE ARCHITECT, PRIOR TO THE INSTALLATION OF IRRIGATION AND PLANTING. THE RECOMMENDATIONS FOR SOIL AMENDMENTS FROM THE REPORT SHALL BE FOLLOWED IF THEY DIFFER FROM THE ONES GIVEN IN THESE PLANTING NOTES. IF IMPORTED SOIL IS REQUIRED, IT SHALL BE CLASS 'A' SOIL OBTAINED FROM A SOURCE DESIGNATED BY THE CONTRACTOR AND APPROVED BY THE CITY LANDSCAPE ARCHITECT. CONTRACTOR SHALL GUARANTEE THE QUALITY OF THE TOPSOIL WITH AN APPROVED AGRICULTURAL SUITABILITY EVALUATION REPORT. SUBMIT THE EVALUATION REPORT TO THE CITY LANDSCAPE ARCHITECT FOR APPROVAL 30 DAYS PRIOR TO ANY SOIL PLACEMENT.
4. PROTECTION OF EXISTING TREES:
THE CONTRACTOR SHALL PROTECT IN PLACE ALL EXISTING TREES AS NOTED ON THE PLANS OR AS DIRECTED BY THE CITY ENGINEER/LANDSCAPE ARCHITECT. THE CONTRACTOR SHALL NOT STORE ANY CONSTRUCTION MATERIALS INCLUDING EQUIPMENT OR EXCAVATED SOILS NOR OPERATE ANY MACHINERY THAT MIGHT COMPACT THE EXISTING SOIL WITHIN THE DRIP LINE OF THE TREE'S CANOPY. THE CONTRACTOR SHALL PROVIDE IRRIGATION AND MAINTENANCE TO ALL PLANT MATERIALS THAT ARE TO REMAIN UNDISTURBED. THE CONTRACTOR SHALL BE RESPONSIBLE TO REPLACE IN SIZE, KIND, AND TO THE SATISFACTION OF THE CITY ENGINEER/LANDSCAPE ARCHITECT ANY EXISTING PLANT MATERIAL THAT IS TO BE PROTECTED AND IS DAMAGED DURING THE CONSTRUCTION PERIOD.
5. WEED ABATEMENT:
THE CONTRACTOR SHALL SUBMIT A WEED ABATEMENT PROGRAM TO THE CITY ENGINEER/LANDSCAPE ARCHITECT FOR APPROVAL 30 DAYS PRIOR TO THE START OF PLANTING OPERATIONS. NO PLANTING OPERATIONS WILL BE ALLOWED UNTIL ALL PLANTING AREAS ARE CLEARED OF WEEDS IN ACCORDANCE WITH THE WEED ABATEMENT PROGRAM AND TO THE SATISFACTION OF THE CITY ENGINEER/ LANDSCAPE ARCHITECT. MAINTAIN ALL PLANTING AREAS FREE OF WEEDS FOR THE DURATION OF THE CONTRACT.
6. PLANT LAYOUT:
THE CONTRACTOR SHALL NOTIFY THE CITY ENGINEER 48 HOURS PRIOR TO PLANTING OPERATIONS TO CONFIRM THE LOCATION OF PLANT MATERIALS. LOCATIONS AND QUANTITIES OF PLANT MATERIALS ON THE PLANS ARE APPROXIMATE AND ARE PROVIDED TO SHOW GENERAL INTENT. PLANT LOCATION ADJUSTMENTS SHALL BE PERFORMED BY THE CONTRACTOR AS DIRECTED BY THE CITY ENGINEER/LANDSCAPE ARCHITECT AT NO ADDITIONAL COST TO THE CITY.
7. SOIL CONDITIONING:
ALL PLANTING AREAS SHALL HAVE THE FOLLOWING AMENDMENTS TILLED INTO THE TOP 6" OF THE SOIL PER 1000 SQUARE FEET:
   A. THREE (3) CUBIC YARDS OF NITROGEN FORTIFIED WOOD COMPOST (TYPE 1 ORGANIC SOIL AMENDMENT).
   B. TWO (2) CUBIC YARDS OF ORGANIC FERTILIZER (TYPE 2 ORGANIC SOIL AMENDMENT)
   C. 100 POUNDS OF AGRICULTURAL GYPSUM
   D. 20 POUNDS OF 12-12-12 QUICK RELEASE COMMERCIAL FERTILIZER THESE QUANTITIES ARE FOR BID BASIS ONLY. REFER TO SOILS REPORTS FOR FINAL QUANTITIES (SEE SPECIFICATIONS).
8. BACKFILL MIX:
ALL PLANTING HOLES, EXCLUDING PLANTING HOLES SMALLER THAN 1 GALLON SHALL HAVE THE FOLLOWING BACKFILL MIXTURE:
   - 70% EXISTING TOPSOIL
   - 30% NITROGEN FORTIFIED WOOD COMPOST (TYPE 1 ORGANIC SOIL AMENDMENT) (FOR AZALEAS, SUBSTITUTE 30% PEAT MOSS)
   - 2 POUNDS PER CUBIC YARD OF IRON SULFATE AND THE FOLLOWING AMOUNT OF PLANTING TABLETS:
     15 GAL. PLANT = FIVE (5)TABLETS
     5 GAL. PLANT = THREE (3) TABLETS
     1 GAL. PLANT = ONE (1) TABLET
     ONE(1) TABLET PER 4" BOX SIZE
9. MULCH:
APPLY 3" OF TYPE 5 MULCH IN ALL PLANTING AREAS.
10. FERTILIZER:
THE CONTRACTOR SHALL APPLY AN 8-8-4 COMMERCIAL SLOW RELEASE FERTILIZER TO ALL PLANTING AREAS AT A RATE OF 20 POUNDS PER 1000 SQUARE FEET UPON COMPLETION OF THE GROUND COVER PLANTING AND AT THIRTY DAY INTERVALS THEREAFTER UNTIL THE END OF THE PLANT ESTABLISHMENT PERIOD. THOROUGHLY WATER ALL PLANTING AREAS FOLLOWING THE APPLICATION OF THE FERTILIZER. ALL FERTILIZER APPLICATIONS SHALL BE PERFORMED UNDER INSPECTION BY A REPRESENTATIVE FROM THE BUREAU OF CONTRACT ADMINISTRATION.
11. PLANT REPLACEMENT:
THE CONTRACTOR SHALL REPLACE AS SOON AS POSSIBLE, ANY PLANT THAT SHOWS SIGNS OF FAILURE TO GROW AT ANY TIME DURING THE CONTRACT PERIOD OR THOSE PLANTS THAT ARE INJURED OR SO DAMAGED AS TO RENDER THEM UNSUITABLE FOR THE PURPOSE INTENDED. PROVIDE REPLACEMENT PLANTS OF THE SAME TYPE AND SIZE, AND INSTALL THEM PER THE PLANTING SPECIFICATION.
12. PLANT ESTABLISHMENT PERIOD
THE CONTRACTOR SHALL PROVIDE A PLANT ESTABLISHMENT PERIOD FOR A LENGTH OF 180 CALENDAR DAYS. ARRANGE FOR A PRE-MAINTENANCE FINAL INSPECTION TO START THE PLANT ESTABLISHMENT PERIOD BY CONTACTING THE BUREAU OF CONTRACT ADMINISTRATION, FINAL INSPECTION SECTION AT:
METR0 AREA-(213) 580-1394.
13. RESTORATION OF DAMAGED AREAS:
THE CONTRACTOR SHALL RESTORE ALL LANDSCAPED AREAS TO THEIR ORIGINAL CONDITION THAT ARE NOT SPECIFICALLY PROVIDED FOR BY THESE PLANS, BUT HAVE BEEN IMPACTED BY CONSTRUCTION. PROVIDE ALL NECESSARY MATERIAL, INCLUDING IRRIGATION EQUIPMENT, SOIL, SOIL AMENDMENTS, PLANTS OF THE SAME SPECIES, KINDS, AND SIZED, ETC. TO THE SATISFACTION OF THE CITY ENGINEER AND THE CITY LANDSCAPE ARCHITECT AT NO ADDITIONAL COST TO THE CITY.
14. GUARANTEES:
THE CONTRACTOR SHALL WARRANT ALL TREES 15 GALLON SIZED AND LARGER FOR ONE YEAR AND ALL SHRUBS SHALL BE WARRANTED FOR A PERIOD OF SIX MONTHS. THE WARRANTY PERIOD SHALL BEGIN UPON THE DATE OF THE FINAL POST MAINTENANCE ACCEPTANCE. THIS WARRANTY DOES NOT INCLUDE ITEMS DAMAGED DUE TO THE CITY'S NEGLECT AND/OR TO ACTS OF GOD.
15. INSPECTIONS:
ALL WORK AND MATERIALS ARE SUBJECT TO INSPECTION AND APPROVAL IN ADDITION TO INSPECTIONS REQUIRED BY THE STANDARD PLANS SPECIFICATIONS. THE FOLLOWING INSPECTIONS ARE REQUIRED:
   - IRRIGATION SYSTEM PRESSURE TESTING
   - IRRIGATION COVERAGE TEST
   - IRRIGATION SYSTEM OPERATIONS TEST
   - TAGGING OF PLANT MATERIAL 15 GALLON AND LARGER AT THEIR SOURCE.
   - APPROVAL OF ALL PLANT MATERIAL AT THE SITE PRIOR TO PLANTING OPERATIONS.
   - CONFIRMATION AND APPROVAL OF PLANT MATERIAL LOCATION AND SPACING PRIOR TO PLANTING.
   - PRE-MAINTENANCE FINAL LANDSCAPE INSPECTION.
   - POST-MAINTENANCE FINAL LANDSCAPE INSPECTION.
16. RECYCLING:
THE CONTRACTOR SHALL RECYCLE ON-OR OFF-SITE ALL VEGETATIVE WASTE (PER SECTION 12.43 OF LAMC).

3 PLANTING NOTES

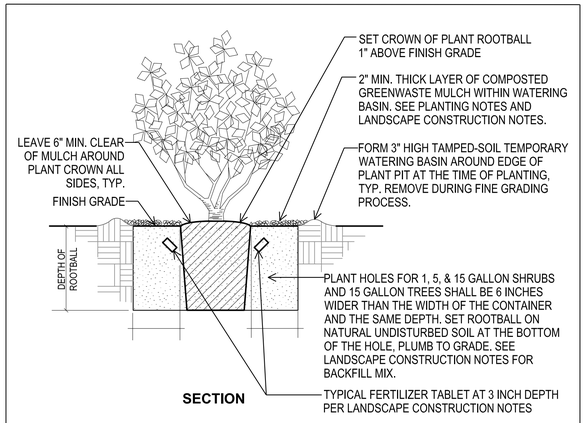

NOTE: DELETE FERTILIZER TABLETS AND MULCH ON TOP OF SHRUB ROOTBALL FOR CALIF. NATIVE PLANTS UNLESS NOTED OTHERWISE.

RP VERSION 10-22-98 / JPH, SHD

2	SHRUB PLANTING	
N.T.S.	BOE VERSION Sep/07 RF	RP DETAIL L2030

2 SHRUB PLANTING

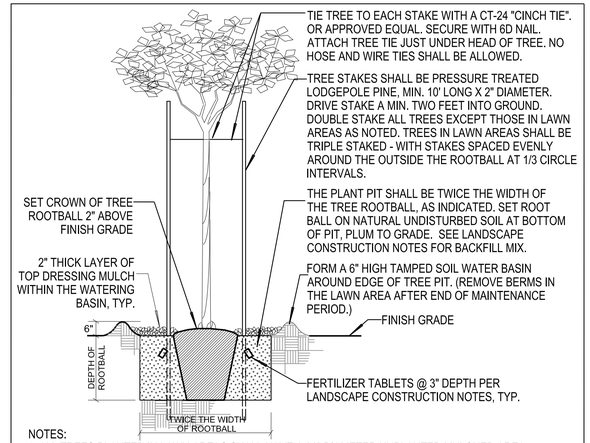

NOTES:
1. ALL TREES PLANTED IN LAWN AREAS SHALL HAVE A 36" DIAMETER UNPLANTED MULCHED AREA AROUND EACH TREE TRUNK.
2. WHEN PLANTING TREES IN AREAS TO RECEIVE SOD, CONTRACTOR SHALL COMPENSATE FOR THE THICKNESS OF THE SOD AND SET TOP OF TREE ROOTBALL APPROPRIATELY TO AVOID A LOW AREA AND PONDING OF WATER.

RP VERSION 03-18-03 / RDF, JPH, SHD, SLG

1	TREE PLANTING AND STAKING	
N.T.S.	BOE VERSION Mar/08 RF, SD	RP DETAIL L2000

1 TREE PLANTING WITH STAKING

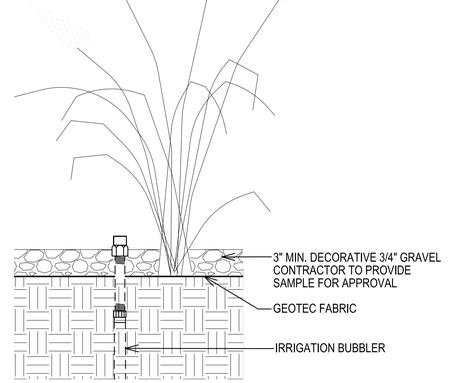

4 DECORATIVE GRAVEL INSTALLATION

BUREAU OF ENGINEERING
OFFICIAL RECORD

WITHERS & SANDGREN
LANDSCAPE ARCHITECTURE + PLANNING
20948 TULSA STREET
CHATSWORTH, CA 91021-0276
(818) 291-0200
lacey@withersandsandgren.com

REVISION DATES (DESIGN STAGE ONLY)

SHEET ISSUE DATE: 01/04/18

FILE PATH: BIM 360://Granada Hills Pool Renovation/A_Granada-Hills_2017.rvt

THE CITY OF LOS ANGELES OR ITS OFFICERS OR AGENTS SHALL NOT BE RESPONSIBLE FOR THE ACCURACY OR COMPLETENESS OF ELECTRONIC COPIES OF THIS PLAN SHEET.

BUREAU OF ENGINEERING
ENGINEERING
CITY OF LOS ANGELES

NO.	REVISION DESCRIPTION	DATE	BY

BUILDING NO. -
INDEX NO. RP-300118

LICENSED LANDSCAPE ARCHITECT
GARY L. MOORE
No. 3820
31 AUG 2021
Renewal Date
3 MAR 2018
STATE OF CALIFORNIA

BUREAU OF PUBLIC WORKS
DEPARTMENT OF PUBLIC WORKS
CITY OF LOS ANGELES

GARY LEE MOORE, PE, ENV SP
CITY ENGINEER

	DATE:
ARCHITECTURAL DIVISION	
ARCHITECT/ENGINEER: LACEY WITHERS	LIC. NO.: CA 3820
DESIGNED BY: LACEY WITHERS	
DRAWN BY: PN	3/03/2020
CHECKED BY: LW	3/03/2020
APPROVED BY: LW	3/03/2020

VERTICAL CONTROL:
HORIZONTAL CONTROL:

SHEET TITLE: LANDSCAPE DETAILS

PROJECT: GRANADA HILLS POOL AND BATHHOUSE REPLACEMENT PROJECT

ADDRESS: 16730 CHATSWORTH STREET GRANADA HILLS, CA 91344

BID SET
PROJECT ISSUE DATE: 06/22/21

WORK ORDER NO. #E170517
PLAN FILE NO. #308
DRAWING NO. L-2.50
SHEET O F SHEETS

PLOTTED:6/26/2018 2:53:10 PM

THE CITY OF LOS ANGELES OR ITS OFFICERS OR AGENTS SHALL NOT BE RESPONSIBLE FOR THE ACCURACY OR COMPLETENESS OF ELECTRONIC COPIES OF THIS PLAN SHEET.

TTLB TEMPLATE REVISION DATE: 02/2013
SHEET ISSUE DATE: 10/07/18
FILE PATH: BIM 360://Granada Hills Pool Renovation/A_Granada-Hills_2017.rvt

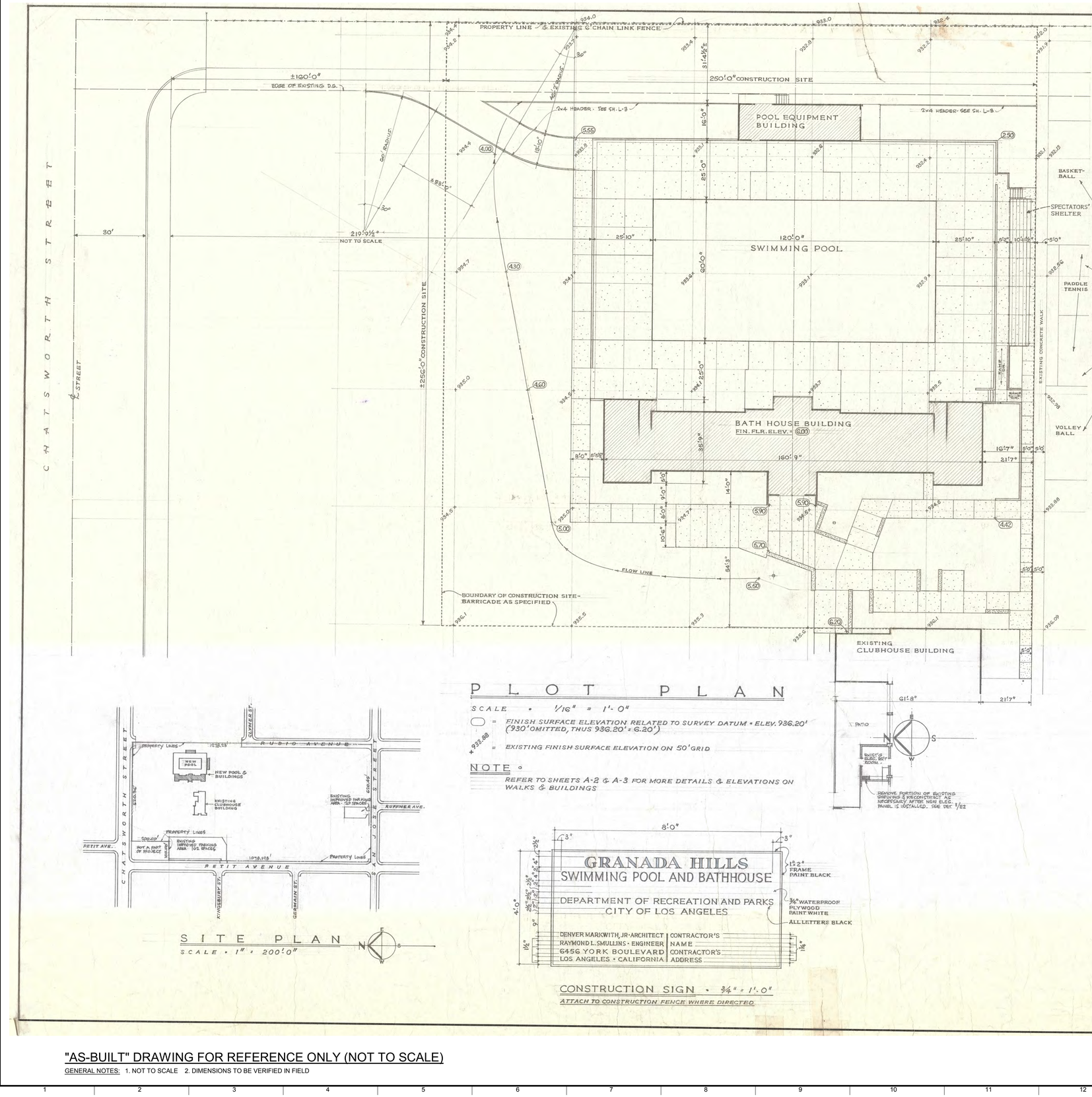

PLOT PLAN

SCALE • 1/16" = 1'-0"

= FINISH SURFACE ELEVATION RELATED TO SURVEY DATUM • ELEV. 936.20' (930' OMITTED, THUS 936.20' = 6.20')

×932.88 = EXISTING FINISH SURFACE ELEVATION ON 50' GRID

NOTE •

REFER TO SHEETS A-2 & A-3 FOR MORE DETAILS & ELEVATIONS ON WALKS & BUILDINGS

CONSTRUCTION SIGN • ¾" = 1'-0"

ATTACH TO CONSTRUCTION FENCE WHERE DIRECTED.

DRAWING INDEX

NO.	TITLE
A-1	PLOT PLAN
A-2	GENERAL FLOOR PLAN
A-3	ROOF PLANS & DETAILS • BATH HOUSE ENTRANCE WALKS & DETAILS
A-4	EXTERIOR ELEVATIONS, DETAILS - BATH HOUSE - SPECTATORS' SHELTER
A-5	SCHEDULES • TOILET & SHOWER ROOM DETAILS
A-6	INTERIOR DETAILS - CENTRAL AREA
A-7	POOL EQUIPMENT BUILDING
A-8	PARTITION, DOOR & WINDOW DETAILS
A-9	POOL DECK PLAN & DETAILS
A-10	POOL DECK DETAILS, BICYCLE RACK
S-1	FOUNDATION PLAN & DETAILS
S-2	STRUCTURAL WALL ELEVATIONS • SECTIONS & DETAILS
S-3	BATH HOUSE ROOF FRAMING PLAN & DETAILS
S-4	EQUIPMENT BLDG., SPECTATORS' SHELTER - ROOF FRAMING PLAN, DETAILS
P-1	PLUMBING PLOT PLAN, GENERAL NOTES, LEGEND
P-2	PLUMBING BATHHOUSE PLANS & DETAILS
P-3	PLUMBING POOL EQUIPMENT BLDG. - PLANS & DETAILS
P-4	PLUMBING SWIMMING POOL PLANS & DETAILS.
E-1	ELECTRICAL PLOT PLAN & SCHEDULES.
E-2	ELECTRICAL POWER & LIGHTING PLAN
L-1	EXISTING WATER LINES, SITE PREPARATION PLAN.
L-2	IRRIGATION & SPRINKLER SYSTEM PLAN.
L-3	PLANTING PLAN
DA	DEDUCTIVE ALTERNATES

C Paioni 1-6-71
John H. Ward 1-6-71
W.K. Miller
Seymour Gruber
Wm Frederick Krupp

000085

"AS-BUILT" DRAWING FOR REFERENCE ONLY (NOT TO SCALE)

GENERAL NOTES: 1. NOT TO SCALE 2. DIMENSIONS TO BE VERIFIED IN FIELD

REVISION DATES (DESIGN STAGE ONLY)

REVISIONS
BID SET - 1/29/73

BUTTRESS, McCLELLAN & MARKWITH INC.
DENVER MARKWITH JR. ARCHITECT
RAYMOND L. SMULLINS ENGINEER
6456 YORK BOULEVARD
LOS ANGELES 42 CLINTON 4-4351

SWIMMING POOL & BATH HOUSE for GRANADA HILLS RECREATION CENTER
16730 CHATSWORTH STREET, LOS ANGELES.
DEPARTMENT OF RECREATION & PARKS
LOS ANGELES, CALIFORNIA

TITLE: PLOT PLAN - SITE PLAN -

DATE PRINTED

DRAWN	DATE
JBT	6-26-70
CHECK	DATE
KW	12/21/70
JOB	4259
SHEET	A-1

BUREAU OF ENGINEERING
OFFICIAL RECORD

BUREAU OF ENGINEERING
DEPARTMENT OF PUBLIC WORKS
CITY OF LOS ANGELES
ENGINEERING
CITY OF LOS ANGELES

NO.	REVISION DESCRIPTION	DATE	BY

BUILDING NO. -
INDEX NO. RP-300118

GARY LEE MOORE, PE, ENV SP
CITY ENGINEER
DATE:
ARCHITECTURAL DIVISION
ARCHITECT/ENGINEER: JOHN SPARANO LIC. NO.: LICENSE
DESIGNED BY: Designer 1/1/19
DRAWN BY: Author 1/1/19
CHECKED BY: Checker 1/1/19
APPROVED BY: Approver 1/1/19

JOHN P. SPARANO
No. C22244
EXP. 9-30-19
REGISTERED ARCHITECT
STATE OF CALIFORNIA

DEPARTMENT OF PUBLIC WORKS
CITY OF LOS ANGELES

90% CONSTRUCTION DOCUMENTS
PROJECT ISSUE DATE: 1/11/19

VERTICAL CONTROL:
HORIZONTAL CONTROL:
SHEET TITLE: AS-BUILT A-1

PROJECT: GRANADA HILLS POOL AND BATHHOUSE REPLACEMENT PROJECT
ADDRESS: 16730 CHATSWORTH STREET GRANADA HILLS, CA 91344

WORK ORDER NO. #E170517
PLAN FILE NO. #308
DRAWING NO. A0.01
SHEET 1 OF SHEETS

PLOTTED:1/13/2019 11:52:23 PM

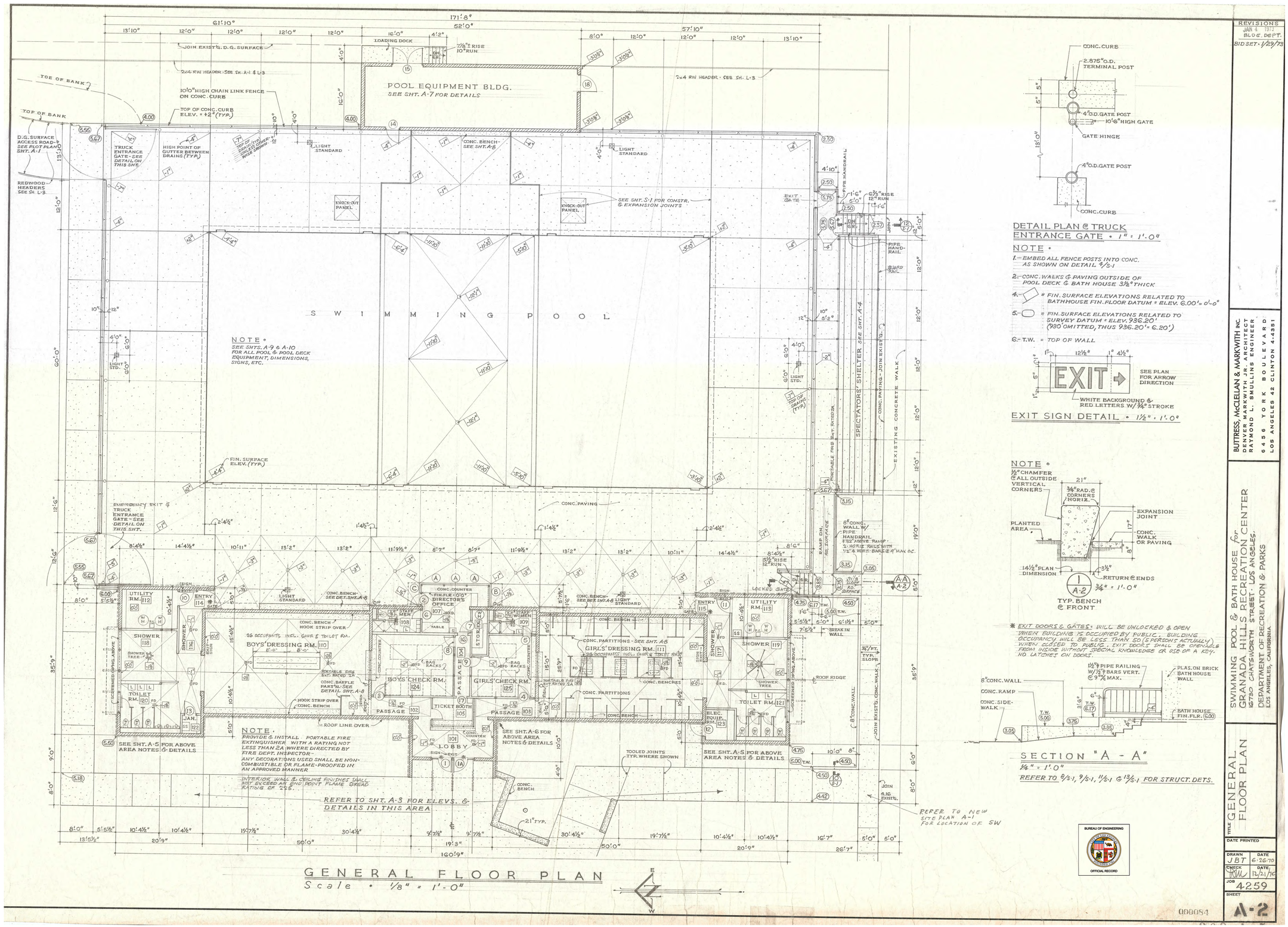

"AS-BUILT" DRAWING FOR REFERENCE ONLY (NOT TO SCALE)

GENERAL NOTES: 1. NOT TO SCALE 2. DIMENSIONS TO BE VERIFIED IN FIELD

REVISIONS
JAN 4 1973 BLDG. DEPT.
BID SET - 1/29/13

BUTTRESS, McCLELLAN & MARKWITH INC.
DENVER MARKWITH JR., ARCHITECT
RAYMOND L. SMULLINS ENGINEER
6456 YORK BOULEVARD
LOS ANGELES 42 CLINTON 4-4351

SWIMMING POOL & BATH HOUSE for GRANADA HILLS RECREATION CENTER
16730 CHATSWORTH STREET - LOS ANGELES.
DEPARTMENT OF RECREATION & PARKS
LOS ANGELES, CALIFORNIA

title GENERAL FLOOR PLAN

DATE PRINTED

DRAWN	DATE
JBT	6-26-70
CHECK	DATE
TMW	12/21/70
JOB	4259
SHEET	A-2

000084

BUREAU OF ENGINEERING
OFFICIAL RECORD

BUREAU OF ENGINEERING
ENGINEERING
CITY OF LOS ANGELES

NO.	REVISION DESCRIPTION	DATE	BY

BUILDING NO. -

INDEX NO. RP-300118

LICENSED ARCHITECT
JOHN P. SPARANO
EXP. 4-30-19
STATE OF CALIFORNIA

DEPARTMENT OF PUBLIC WORKS
CITY OF LOS ANGELES
GARY LEE MOORE, PE, ENV SP
CITY ENGINEER

CITY ENGINEER	DATE:
	1/11/19
	1/11/19
	1/11/19
	1/11/19
	1/11/19

ARCHITECTURAL DIVISION
ARCHITECT/ENGINEER: JOHN SPARANO LIC. NO.: LICENSE
DESIGNED BY: Designer
DRAWN BY: Author
CHECKED BY: Checker
APPROVED BY: Approver

VERTICAL CONTROL:
HORIZONTAL CONTROL:
SHEET TITLE: AS-BUILT A-2

PROJECT: GRANADA HILLS POOL AND BATHHOUSE REPLACEMENT PROJECT
ADDRESS: 16730 CHATSWORTH STREET GRANADA HILLS, CA 91344

90% CONSTRUCTION DOCUMENTS
PROJECT ISSUE DATE: 1/11/19
CITY OF LOS ANGELES

WORK ORDER NO. #E170517
PLAN FILE NO. #308
DRAWING NO. A0.02
SHEET 0 OF SHEETS

PLOTTED:1/13/2019 11:54:52 PM

REVISION DATES (DESIGN STAGE ONLY)

TTLB TEMPLATE REVISION DATE: 02/2013
SHEET ISSUE DATE: 10/07/18
FILE PATH: BIM 360://Granada Hills Pool Renovation/A_Granada-Hills_2017.rvt

THE CITY OF LOS ANGELES OR ITS OFFICERS OR AGENTS SHALL NOT BE RESPONSIBLE FOR THE ACCURACY OR COMPLETENESS OF ELECTRONIC COPIES OF THIS PLAN SHEET.

THE CITY OF LOS ANGELES OR ITS OFFICERS OR AGENTS SHALL NOT BE RESPONSIBLE FOR THE ACCURACY OR COMPLETENESS OF ELECTRONIC COPIES OF THIS PLAN SHEET.

TTLB TEMPLATE REVISION DATE: 02/2013
SHEET ISSUE DATE: 10/07/18
FILE PATH: BIM 360://Granada Hills Pool Renovation/A_Granada-Hills_2017.rvt

REVISION DATES (DESIGN STAGE ONLY)

POOL EQUIPMENT BUILDING ROOF PLAN

1/8" = 1'-0"

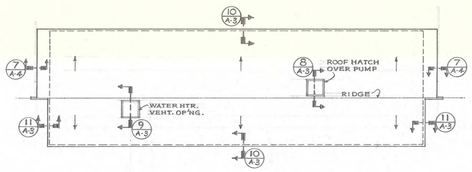

BATH HOUSE ROOF PLAN • 1/8" = 1'-0"

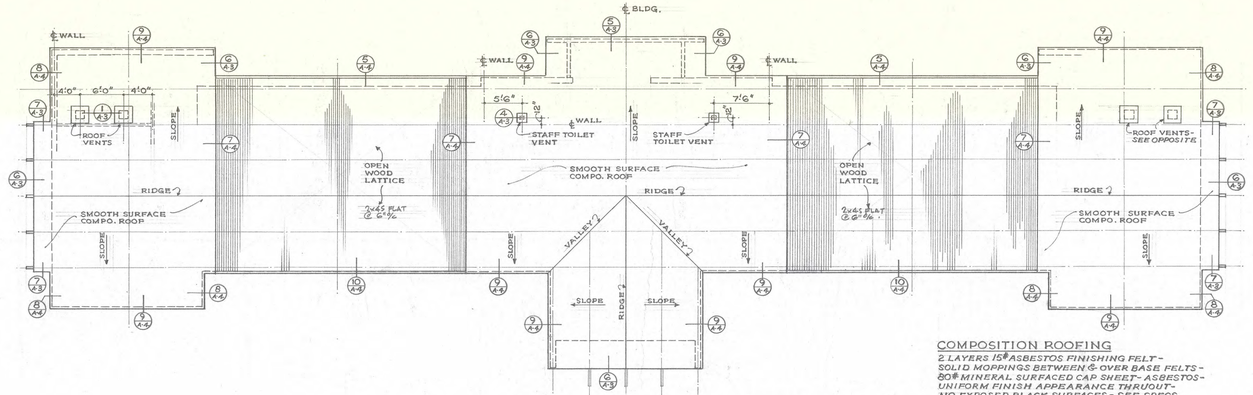

COMPOSITION ROOFING

2 LAYERS 15# ASBESTOS FINISHING FELT - SOLID MOPPINGS BETWEEN & OVER BASE FELTS - 80# MINERAL SURFACED CAP SHEET - ASBESTOS - UNIFORM FINISH APPEARANCE THRUOUT - NO EXPOSED BLACK SURFACES - SEE SPECS.

BUREAU OF ENGINEERING — OFFICIAL RECORD

SPECTATORS' SHELTER ROOF PLAN • 1/8" = 1'-0"

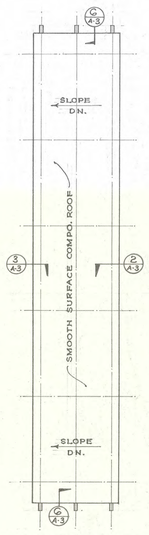

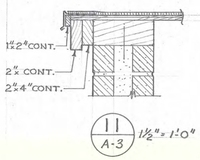

BATH HOUSE ENTRANCE WALKS & DETAILS

1/8" = 1'-0"

~~REFER TO SHT. A-2 FOR EXPLANATION OF GRADES SHOWN HERE.~~

THIS WORK TO BE DESIGNED GENERAL THIS CONTRACT TO FIT THE SITE

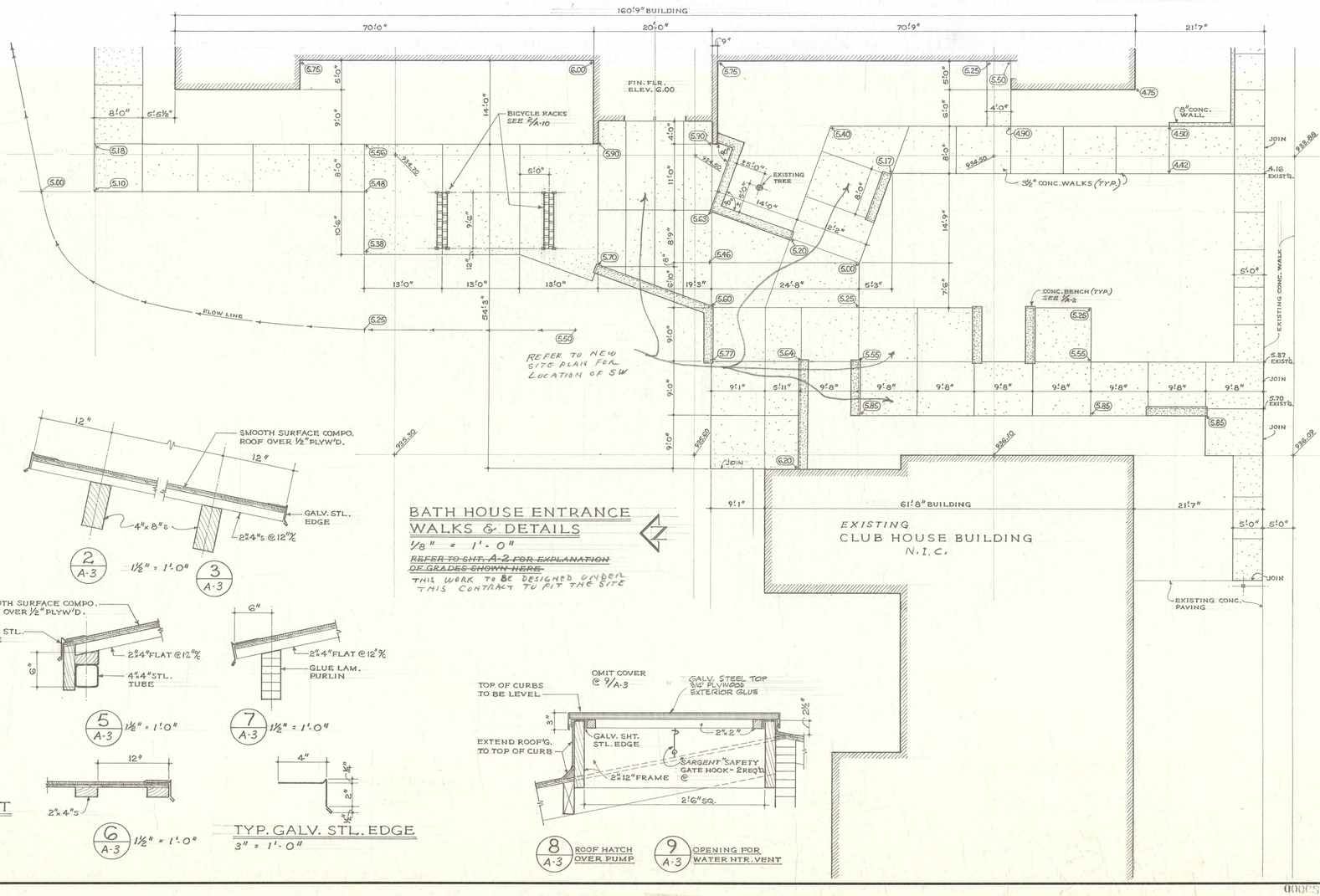

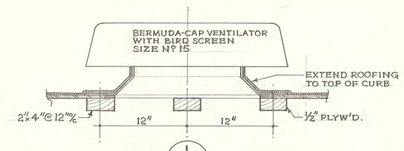

NOTE • "WESTERN DURAGLAS" ROOF VENTILATORS OR SIMILAR LOW SILHOUETTE TYPE VENTILATOR WITH EQUAL CAPACITY MAY BE SUBMITTED FOR "BERMUDA-CAP" VENTILATORS

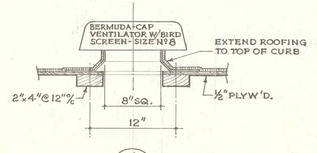

"AS-BUILT" DRAWING FOR REFERENCE ONLY (NOT TO SCALE)

GENERAL NOTES: 1. NOT TO SCALE 2. DIMENSIONS TO BE VERIFIED IN FIELD

000053 308 A 5

REVISIONS

BID SET- 1/29/73

BUTTRESS, McCLELLAN & MARKWITH INC.
DENVER MARKWITH, ARCHITECT
RAYMOND L. SHULLING, ENGINEER
6456 YORK BOULEVARD
LOS ANGELES 42 CLINTON 4-4351

SWIMMING POOL & BATH HOUSE for GRANADA HILLS RECREATION CENTER
16730 CHATSWORTH STREET · LOS ANGELES.
DEPARTMENT OF RECREATION & PARKS
LOS ANGELES, CALIFORNIA

TITLE: ROOF PLANS & DETAILS.

DATE PRINTED

DRAWN	JBT	DATE 6-26-70
CHECK	[illegible]	DATE 12/21/70
JOB	4259	
SHEET	A-3	

BUREAU OF ENGINEERING
PUBLIC WORKS
CITY OF LOS ANGELES
DEPARTMENT OF PUBLIC WORKS

ENGINEERING
CITY OF LOS ANGELES

NO.	REVISION DESCRIPTION	DATE	BY

BUILDING NO. -

INDEX NO. RP-300118

LICENSED ARCHITECT — GARY L. P. SPARANO — EXP. 4-30-19 — STATE OF CALIFORNIA

GARY LEE MOORE, PE, ENV SP — CITY ENGINEER

ARCHITECT/ENGINEER: JOHN SPARANO LIC. NO.: LICENSE

		DATE:
DESIGNED BY:	Designer	1/1/19
DRAWN BY:	Author	1/1/19
CHECKED BY:	Checker	1/1/19
APPROVED BY:	Approver	1/1/19

VERTICAL CONTROL:
HORIZONTAL CONTROL:

SHEET TITLE: AS-BUILT A-3

PROJECT: GRANADA HILLS POOL AND BATHHOUSE REPLACEMENT PROJECT

ADDRESS: 16730 CHATSWORTH STREET GRANADA HILLS, CA 91344

90% CONSTRUCTION DOCUMENTS
PROJECT ISSUE DATE: 1/11/19

CITY OF LOS ANGELES

WORK ORDER NO. #E170517

PLAN FILE NO. #308

DRAWING NO. A0.03

SHEET [illegible] OF SHEETS

PLOTTED:1/13/2019 11:57:02 PM

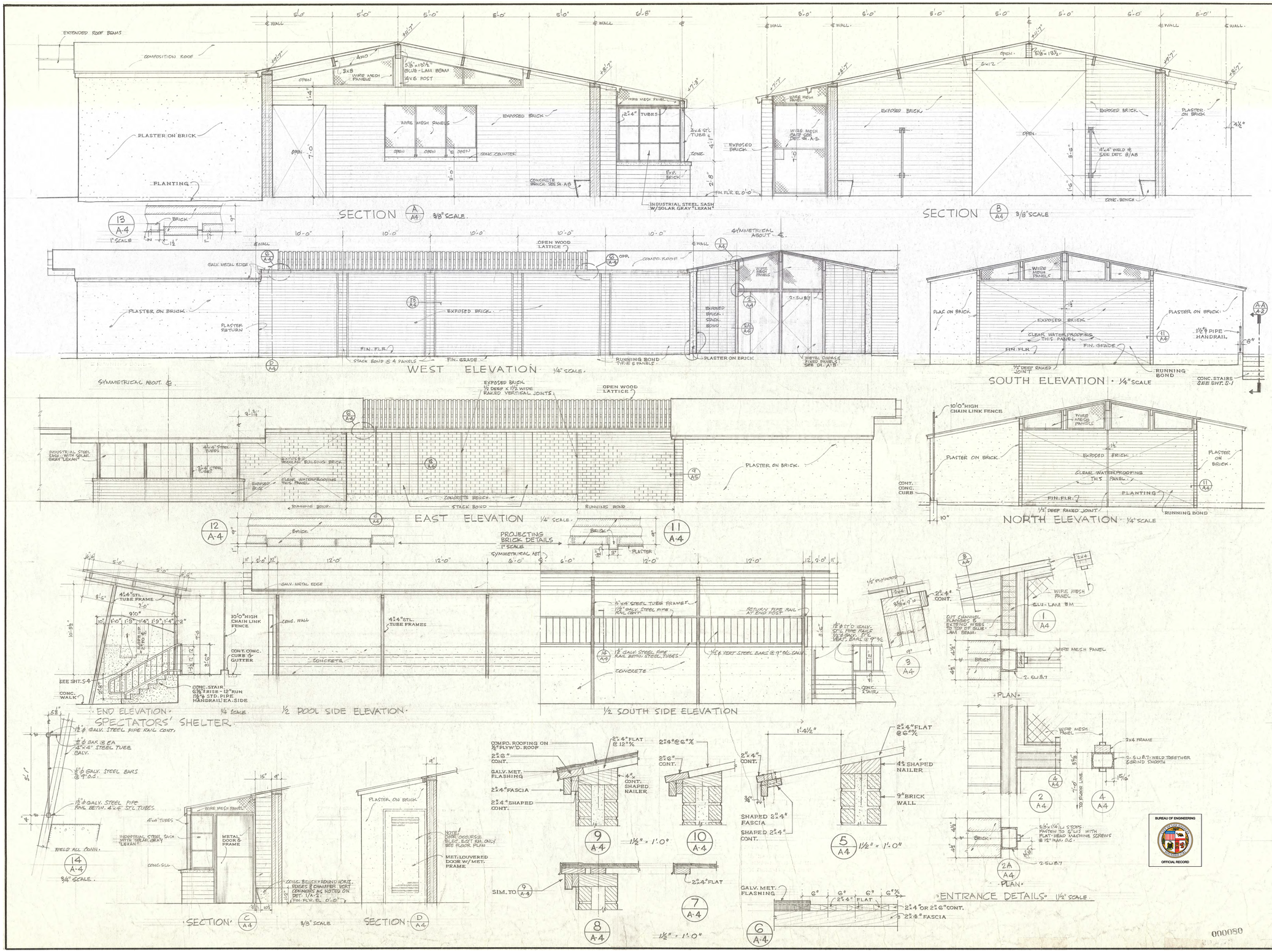

REVISIONS
BLDG. DEPT.-1/4/73
BID SET-1/29/73

BUTTRESS, McCLELLAN & MARKWITH INC.
DENVER MARKWITH JR. ARCHITECT
RAYMOND L. SMULLINS ENGINEER
6456 YORK BOULEVARD
LOS ANGELES 42 CLINTON 4-4351

SWIMMING POOL & BATH HOUSE for
GRANADA HILLS RECREATION CENTER
16730 CHATSWORTH STREET, LOS ANGELES.
DEPARTMENT OF RECREATION & PARKS
LOS ANGELES, CALIFORNIA.

TITLE: EXTERIOR ELEVATIONS BATH HOUSE & SPECTATORS' SHELTER

DATE PRINTED

DRAWN	DATE 6-26-70
CHECK	DATE 12/21/70
JOB	4259
SHEET	A-4

DEPARTMENT OF PUBLIC WORKS
BUREAU OF ENGINEERING

ENGINEERING
CITY OF LOS ANGELES

NO.	REVISION DESCRIPTION	DATE	BY

INDEX NO. RP-300118

BUILDING NO. -

LICENSED ARCHITECT
JOHN P. SPARANO
EXP. 4-30-19
STATE OF CALIFORNIA

GARY LEE MOORE, PE, ENV SP
ARCHITECTURAL DIVISION
ARCHITECT/ENGINEER: JOHN SPARANO LIC. NO.: LICENSE
DESIGNED BY: Designer
DRAWN BY: Author
CHECKED BY: Checker
APPROVED BY: Approver

CITY ENGINEER
DATE: 1/11/19
1/11/19
1/11/19
1/11/19
1/11/19

CITY OF LOS ANGELES

VERTICAL CONTROL:
HORIZONTAL CONTROL:
SHEET TITLE: AS-BUILT A-4
PROJECT: GRANADA HILLS POOL AND BATHHOUSE REPLACEMENT PROJECT
ADDRESS: 16730 CHATSWORTH STREET GRANADA HILLS, CA 91344

WORK ORDER NO. #E170517
PLAN FILE NO. #308
DRAWING NO. A0.04
SHEET OF SHEETS

90% CONSTRUCTION DOCUMENTS
PROJECT ISSUE DATE: 1/11/19

PLOTTED:1/13/2019 11:58:52 PM

"AS-BUILT" DRAWING FOR REFERENCE ONLY (NOT TO SCALE)

GENERAL NOTES: 1. NOT TO SCALE 2. DIMENSIONS TO BE VERIFIED IN FIELD

THE CITY OF LOS ANGELES OR ITS OFFICERS OR AGENTS SHALL NOT BE RESPONSIBLE FOR THE ACCURACY OR COMPLETENESS OF ELECTRONIC COPIES OF THIS PLAN SHEET.

TTLB TEMPLATE REVISION DATE: 02/2013
SHEET ISSUE DATE: 10/07/18
FILE PATH: BIM 360://Granada Hills Pool Renovation/A_Granada-Hills_2017.rvt

REVISION DATES (DESIGN STAGE ONLY)

THE CITY OF LOS ANGELES OR ITS OFFICERS OR AGENTS SHALL NOT BE RESPONSIBLE FOR THE ACCURACY OR COMPLETENESS OF ELECTRONIC COPIES OF THIS PLAN SHEET.

TTLB TEMPLATE REVISION DATE: 02/2013
SHEET ISSUE DATE: 10/07/18
FILE PATH: BIM 360://Granada Hills Pool Renovation/A_Granada-Hills_2017.rvt

REVISION DATES (DESIGN STAGE ONLY)

BATHHOUSE INTERIOR FINISH SCHEDULE

№	SPACE	FLOOR: WOOD FLOAT FINISH CONC.	FLOOR: EXPOSED CONCRETE	FLOOR: NONE AT BRICK	BASE: EXPOSED BRICK	BASE: PLASTER	BASE: GLAZED COATING OVER PLASTER	CEILING: EXPOSED CONSTRUCTION	NOTES
101	LOBBY	•		•	•			•	
102	PASSAGE	•		•	•			•	
103	PASSAGE	•		•	•			•	
104	PASSAGE	•		•	•			•	
105	TICKET BOOTH	•		•	•			•	
106	STORAGE	•		•	•			•	
107	DIRECTOR'S OFFICE	•		•	•			•	
108	STAFF MEN	•		•			•	•	CERAMIC TILE SHOWER - GLAZED COATING @ SOFFIT AT SHOWER & TOILET.
109	STAFF WOMEN	•		•			•	•	DO.
110	BOYS' DRESS'G RM.	•			•			•	
111	GIRLS' DRESS'G RM.	•			•			•	
112	UTILITY ROOM	•		•	•			•	
113	UTILITY ROOM	•		•	•			•	
114	ENTRY	•			•			•	
115	ENTRY	•			•			•	
116	SHOWER	•		•			•	•	
117	SHOWER	•		•			•	•	
118	SHOWER	•		•			•	•	
119	SHOWER	•		•			•	•	
120	TOILET RM.	•		•			•	•	
121	TOILET RM	•		•			•	•	
122	JAN. CLOS.	•		•	•		•	•	
123	ELEC. EQUIP. RM.	•		•	•		•	•	
124	BOYS' CHECK RM.	•		•	•		•	•	
125	GIRLS' CHECK RM.	•		•	•		•	•	

PROJECT MATERIAL & COLOR SCHEDULE

MATERIAL & LOCATION	COLOR
BATHHOUSE EXTERIOR	
PLASTER - NORTH & SOUTH ELEVATIONS - INTEGRAL COLOR	PLOCHERE № 48
PLASTER - WEST & EAST ELEVATIONS - INTEGRAL COLOR	PLOCHERE № 48
BRICK - NO PAINT (SEE ELEVATIONS FOR CLEAR WATERPROOFING)	RED BRICK - TO MATCH EXISTING CLUBHOUSE BUILDING
GALVANIZED STEEL UNLESS OTHERWISE SCHEDULED - NO PAINT	NATURAL
COMPO ROOF - GRANULE SURFACE CAP SHEET	WHITE
WOOD EAVE FACIA - ALL SURFACES - PAINT	WHITE
GALV. STEEL ROOF EDGE & ALL EXPOSED METAL ON ROOF - PAINT	WHITE
EXPOSED WOOD ROOF SURFACES & LATTICE FRAMING - STAIN	WHITE
GALV. METAL DOORS & FRAMES (EXTERIOR & INTERIOR) - PAINT	PLOCHERE № 852
LOBBY ENTRANCE - EXTERIOR & INTERIOR, STEEL STRUCTURE FRAME & DOORS (NO PAINT ON WIRE MESH PANELS) - PAINT	PLOCHERE № 852
BATH HOUSE INTERIOR	
EXPOSED ROOF STRUCTURE - EXPOSED WOOD - STAIN	WHITE
EXPOSED PIPING & CONDUIT - PAINT	WHITE (OR MATCH ADJOINING SURFACE)
PLASTER - INTEGRAL COLOR	PLOCHERE № 47
BRICK - UNPAINTED	SAME AS EXTERIOR
GALV. STEEL UNLESS OTHERWISE SCHEDULED - NO PAINT	
GALV. METAL DOORS & FRAMES (EXCEPT EXTERIOR) - PAINT	PLOCHERE № 45
GLAZED COATING *	WHITE WITH PLOCHERE № 45 FLECK
METAL STALLS & DOORS (STAFF ROOMS & GIRL'S TOILET)	STD. COLOR SIMILAR TO PLOCHERE № 853
CERAMIC TILE - STAFF SHOWERS - FLOOR: UNGLAZED; WALLS: GLAZED	FRANCISCAN "TEXTURED BLUE" A-262 "CLAIR DE LUNE"
WOOD CABINETS	NATURAL
LAMINATED PLASTIC TABLE - DIRECTOR'S OFFICE	FORMICA SUEDE - 855 "CHUTNEY"
POOL	
CHAIN LINK FENCE AROUND POOL DECK	GREEN (REC. & PARKS STANDARD COLOR)
CERAMIC TILE LANE MARKERS & TARGETS	BLACK - NON SLIP SURFACE
CERAMIC TILE @ GUTTER - GLAZED	FRANCISCAN A-203 "TURQUOISE"
SMOOTH CONCRETE SURFACE FLOOR & WALLS - PAINT	WHITE
SPECTATORS' SHELTER - POOL EQUIPMENT BUILDING	
MATERIALS NOTED ON DRAWINGS - PAINT FINISH SAME AS BATHHOUSE	SAME AS BATHHOUSE

* GLAZED COATING: DESCO "GLAZETITE" TYPE II - COLORED EPOXY TYPE BASE COAT & CLEAR GLAZE FINISH COAT APPLIED OVER PORTLAND CEMENT PLASTER.

REVISIONS
BID SET-1/29/19

BUTTRESS, McCLELLAN & MARK WITH INC.
STEVEN MARK WITH JR. ARCHITECT
RAYMOND L. SHULLING ENGINEER
6456 YORK BOULEVARD
LOS ANGELES 42 CLINTON 4-4351

SWIMMING POOL & BATH HOUSE & GRANADA HILLS RECREATION CENTER
16730 CHATSWORTH STREET, LOS ANGELES.
DEPARTMENT OF RECREATION & PARKS
LOS ANGELES, CALIFORNIA.

TITLE: SCHEDULES, TOILET & SHOWER ROOM DETAILS.

DATE PRINTED

DRAWN	DATE
Author	6-26-19
CHECK	DATE
TOM	12/20/19
JOB	4259
SHEET	A-5

BUREAU OF ENGINEERING — OFFICIAL RECORD

"AS-BUILT" DRAWING FOR REFERENCE ONLY (NOT TO SCALE)

GENERAL NOTES: 1. NOT TO SCALE 2. DIMENSIONS TO BE VERIFIED IN FIELD

BUREAU OF ENGINEERING
CITY OF LOS ANGELES

NO.	REVISION DESCRIPTION	DATE	BY

BUILDING NO. -
INDEX NO. RP-300118

DEPARTMENT OF PUBLIC WORKS

GARY LEE MOORE, PE, ENV SP — CITY ENGINEER

ARCHITECT/ENGINEER: JOHN SPARANO	LIC. NO.: LICENSE
DESIGNED BY: Designer	DATE: 1/11/19
DRAWN BY: Author	1/11/19
CHECKED BY: Checker	1/11/19
APPROVED BY: Approver	1/11/19

JOHN P. SPARANO — LICENSED ARCHITECT — EXP. 4-30-19 — STATE OF CALIFORNIA

VERTICAL CONTROL:
HORIZONTAL CONTROL:
SHEET TITLE: AS-BUILT A-5

PROJECT: GRANADA HILLS POOL AND BATHHOUSE REPLACEMENT PROJECT
ADDRESS: 16730 CHATSWORTH STREET GRANADA HILLS, CA 91344

90% CONSTRUCTION DOCUMENTS
PROJECT ISSUE DATE: 1/11/19

CITY OF LOS ANGELES

WORK ORDER NO. #E170517
PLAN FILE NO. #308
DRAWING NO. A0.05
SHEET 0 OF SHEETS

PLOTTED:1/14/2019 12:00:48 AM

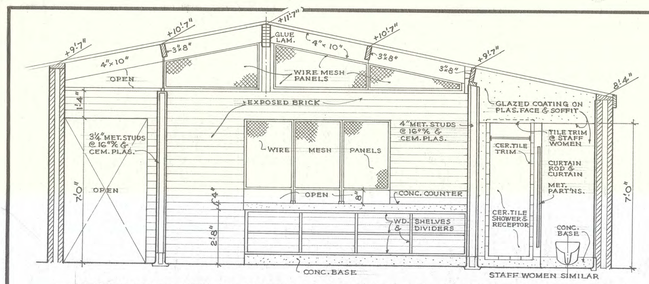

SECTION thru STAFF MEN, BOYS' CHECK RM. & PASSAGE • ⅜" = 1'-0"
LOOKING NORTH

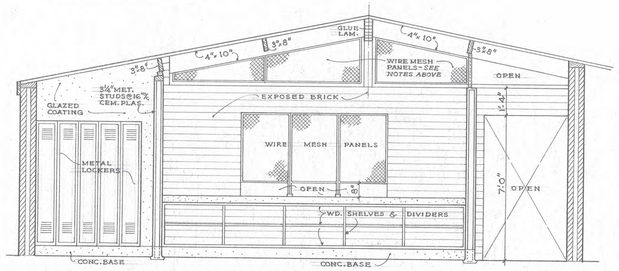

SECTION thru PASSAGE, GIRLS' CHECK RM. & STAFF WOMEN • ⅜" = 1'-0"
LOOKING SOUTH

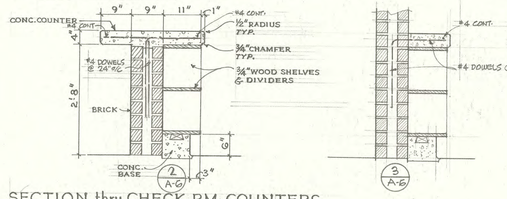

SECTION thru CHECK RM. COUNTERS
¾" = 1'-0"

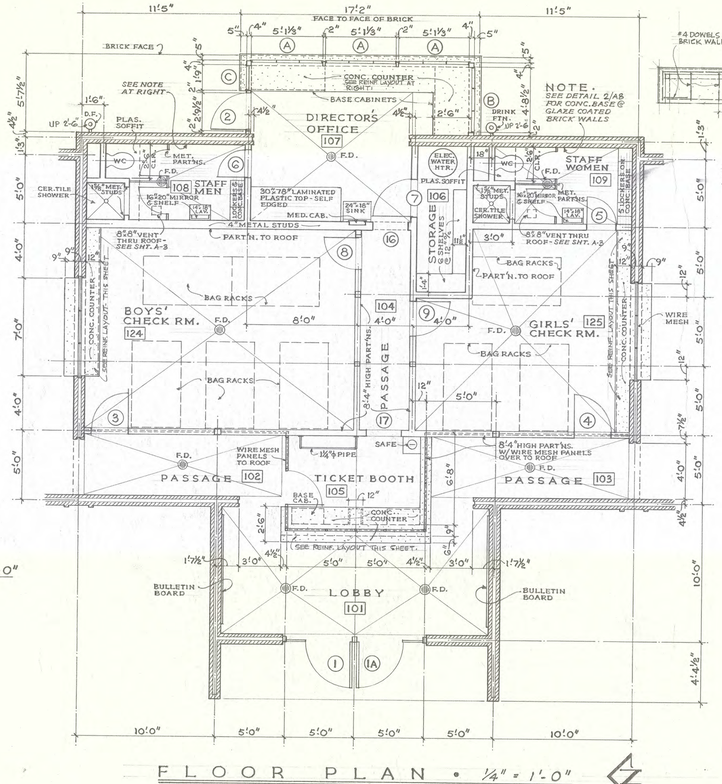

FLOOR PLAN • ¼" = 1'-0"

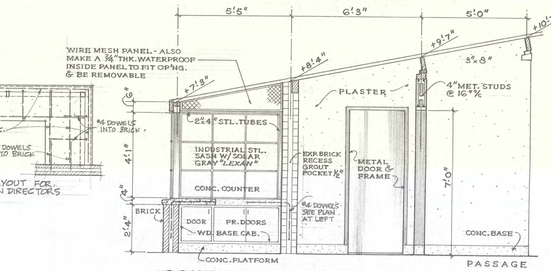

SOUTH ELEVATION • ⅜" = 1'-0"

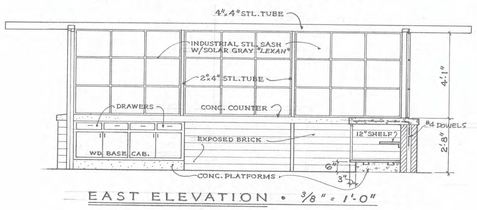

EAST ELEVATION • ⅜" = 1'-0"

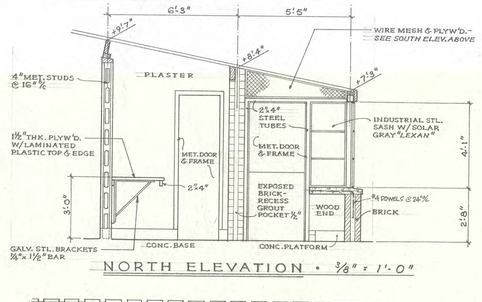

NORTH ELEVATION • ⅜" = 1'-0"

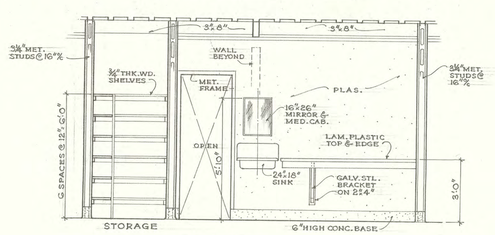

WEST ELEVATION
DIRECTOR'S OFFICE DETAILS • ⅜" = 1'-0"

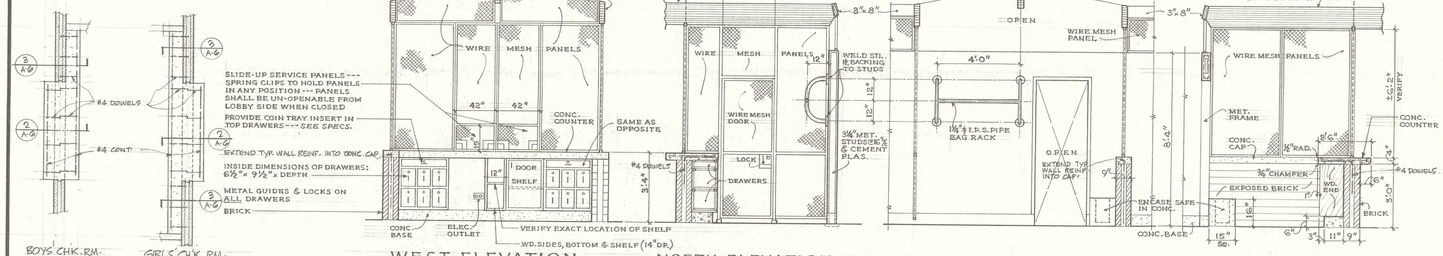

BOYS' CHK. RM. COUNTER. GIRLS' CHK. RM. COUNTER.
REINFORCING LAYOUT ¼"=1'-0"

WEST ELEVATION ⅜" = 1'-0"

NORTH ELEVATION ⅜" = 1'-0"

EAST ELEVATION ⅜" = 1'-0"

SOUTH ELEVATION ⅜" = 1'-0"

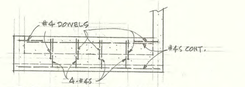

TICKET BOOTH COUNTER REINFORCING LAYOUT ½"=1'-0"

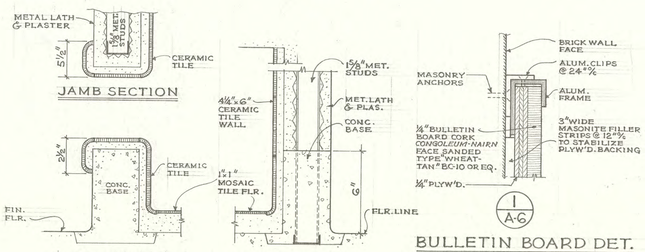

BULLETIN BOARD DET.
full size

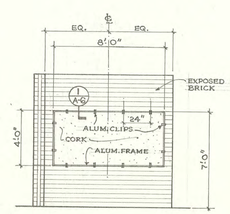

SOUTH WALL LOBBY-101
NORTH WALL SIMILAR • ¼" = 1'-0"

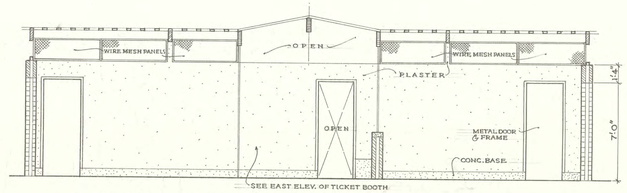

EAST ELEVATION of PASSAGE #102 & #103 • ⅛" = 1'-0"

"AS-BUILT" DRAWING FOR REFERENCE ONLY (NOT TO SCALE)

GENERAL NOTES: 1. NOT TO SCALE 2. DIMENSIONS TO BE VERIFIED IN FIELD

REVISIONS
BID SET: 1/29/13

BUTTRESS, McCLELLAN & MARKWITH INC.
DENVER MARKWITH JR. ARCHITECT
RAYMOND L. SMULLINS ENGINEER
6456 YORK BOULEVARD
LOS ANGELES 42 CLINTON 4-4351

SWIMMING POOL & BATH HOUSE for GRANADA HILLS RECREATION CENTER
16730 CHATSWORTH STREET, LOS ANGELES
DEPARTMENT OF RECREATION & PARKS
LOS ANGELES, CALIFORNIA

TITLE: INTERIOR DETAILS: CENTRAL AREA

DATE PRINTED

DRAWN	DATE
JBT	6-25-70
CHECK	DATE
JM	12/4/70
JOB	4259
SHEET	A-6

BUREAU OF ENGINEERING
OFFICIAL RECORD

DEPARTMENT OF PUBLIC WORKS
BUREAU OF ENGINEERING
CITY OF LOS ANGELES
ENGINEERING

NO.	REVISION DESCRIPTION	DATE	BY

BUILDING NO. -

INDEX NO. RP-300118

CITY OF LOS ANGELES
90% CONSTRUCTION DOCUMENTS
PROJECT ISSUE DATE: 1/11/19

CITY ENGINEER	GARY LEE MOORE, PE, ENV SP	
DATE:		
VERTICAL CONTROL:		
HORIZONTAL CONTROL:		
SHEET TITLE: AS-BUILT A-6	ARCHITECTURAL DIVISION	
	ARCHITECT/ENGINEER: JOHN SPARANO	LIC. NO.: LICENSE
	DESIGNED BY: Designer	1/1/19
	DRAWN BY: Author	1/1/19
	CHECKED BY: Checker	1/1/19
	APPROVED BY: Approver	1/1/19

PROJECT: GRANADA HILLS POOL AND BATHHOUSE REPLACEMENT PROJECT
ADDRESS: 16730 CHATSWORTH STREET GRANADA HILLS, CA 91344

WORK ORDER NO. #E170517
PLAN FILE NO. #308
DRAWING NO. A0.06
SHEET 0 OF SHEETS

PLOTTED:1/14/2019 12:02:48 AM

000678

THE CITY OF LOS ANGELES OR ITS OFFICERS OR AGENTS SHALL NOT BE RESPONSIBLE FOR THE ACCURACY OR COMPLETENESS OF ELECTRONIC COPIES OF THIS PLAN SHEET.

TTLB TEMPLATE REVISION DATE: 02/2013
SHEET ISSUE DATE: 10/07/18
FILE PATH: BIM 360://Granada Hills Pool Renovation/A_Granada-Hills_2017.rvt

REVISION DATES (DESIGN STAGE ONLY)

THE CITY OF LOS ANGELES OR ITS OFFICERS OR AGENTS SHALL NOT BE RESPONSIBLE FOR THE ACCURACY OR COMPLETENESS OF ELECTRONIC COPIES OF THIS PLAN SHEET.

TTLB TEMPLATE REVISION DATE: 02/2013
SHEET ISSUE DATE: 10/07/18
FILE PATH: BIM 360://Granada Hills Pool Renovation/A_Granada-Hills_2017.rvt

REVISION DATES (DESIGN STAGE ONLY)

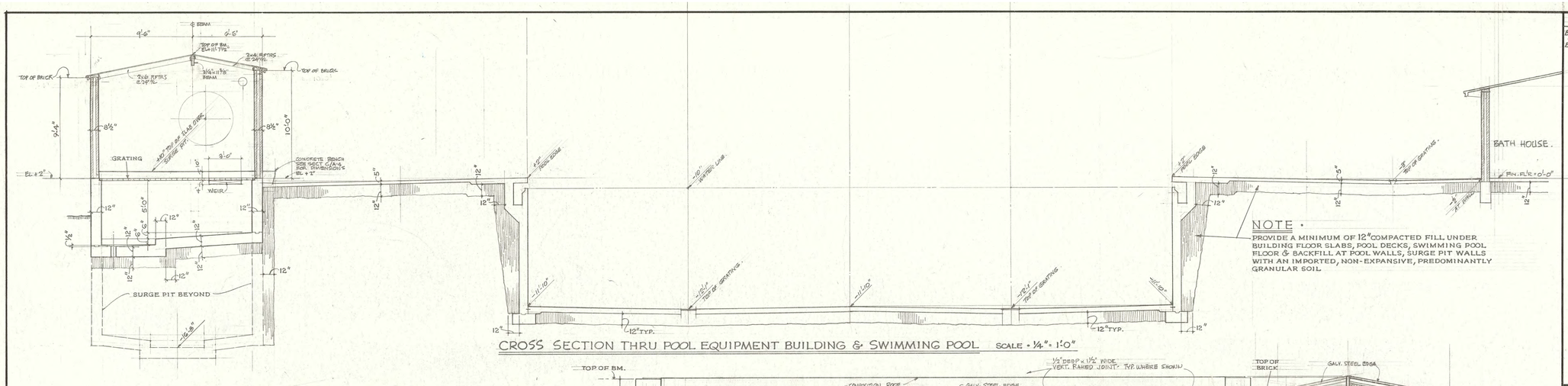

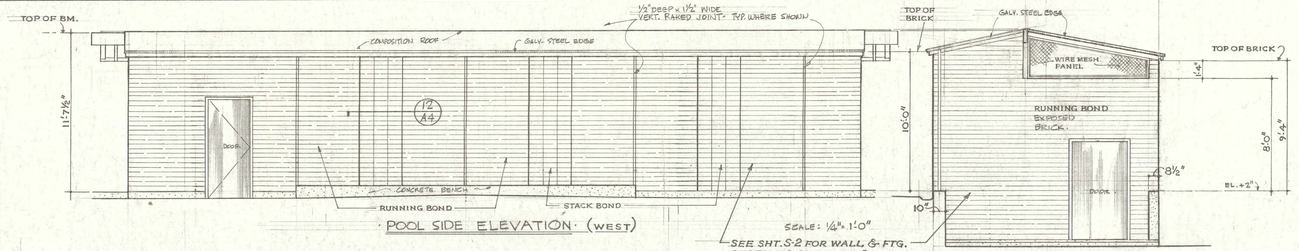

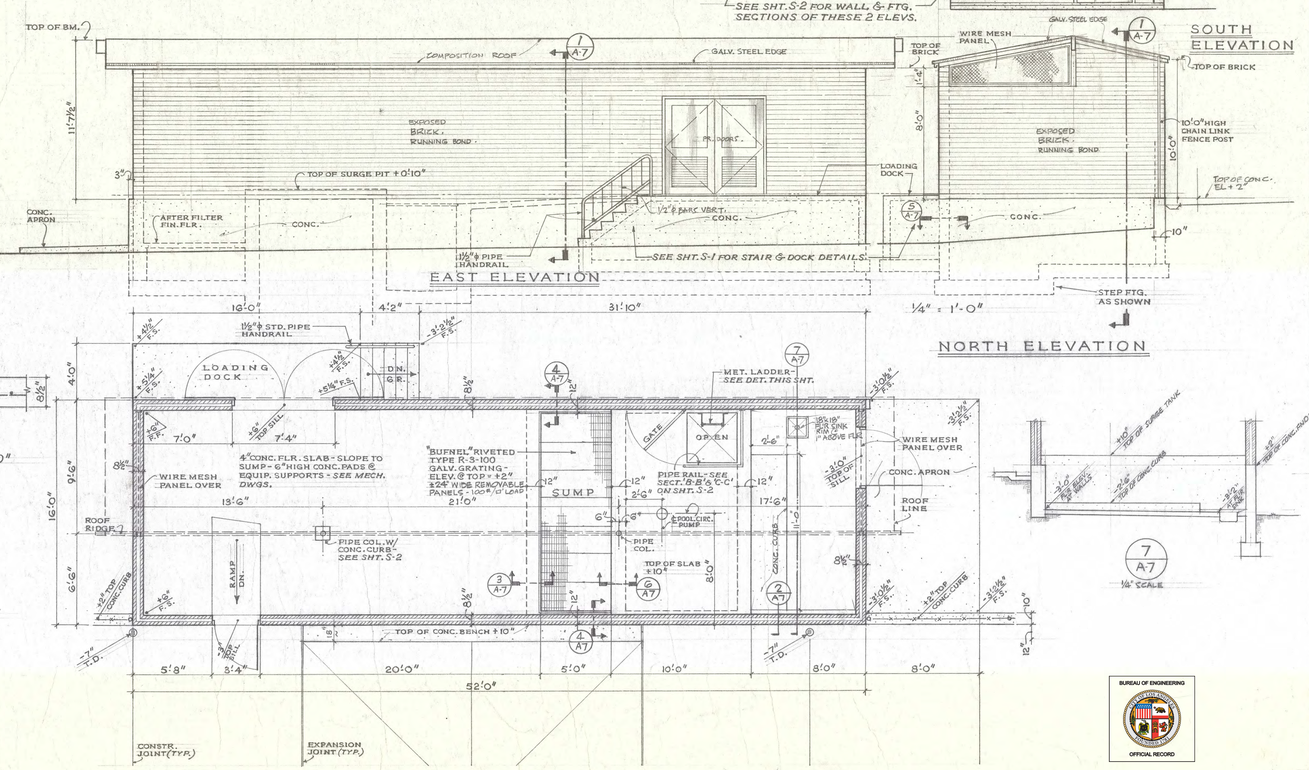

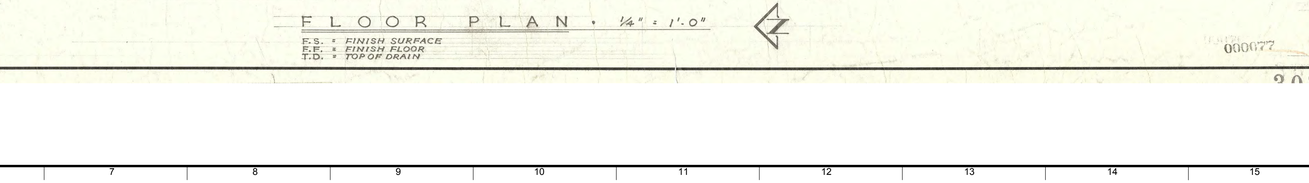

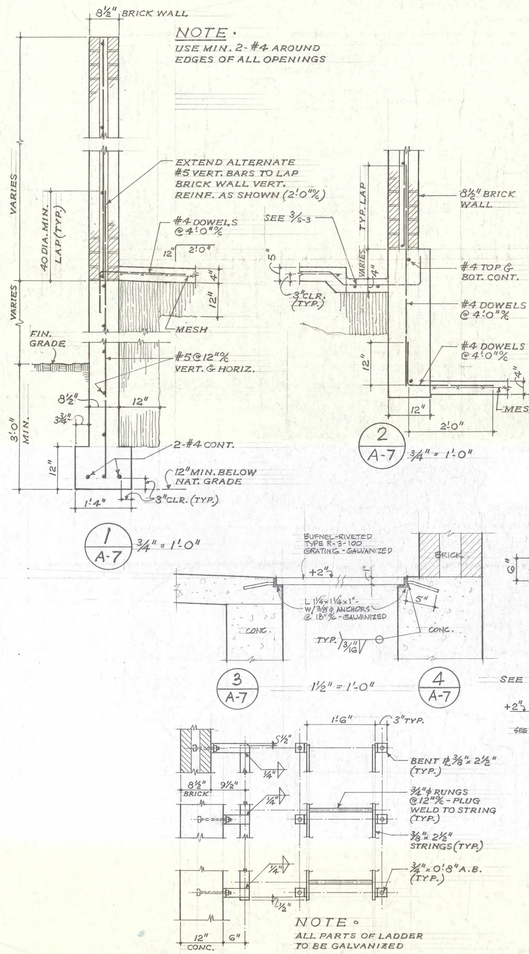

"AS-BUILT" DRAWING FOR REFERENCE ONLY (NOT TO SCALE)

GENERAL NOTES: 1. NOT TO SCALE 2. DIMENSIONS TO BE VERIFIED IN FIELD

REVISIONS
BLDG. DEPT. 1/4/13
BID SET · 1/29/13

BUTTRESS, McCLELLAN & MARKWITH INC.
ARCHITECTURE · PLANNING
RAYMOND L. SMULLINS ENGINEER
6456 YORK BOULEVARD
LOS ANGELES 42 CLINTON 4-2351

BUREAU OF ENGINEERING
PUBLIC WORKS
DEPARTMENT OF PUBLIC WORKS
CITY OF LOS ANGELES
ENGINEERING
CITY OF LOS ANGELES

NO.	REVISION DESCRIPTION	DATE	BY

BUILDING NO. -
INDEX NO. RP-300118

LICENSED ARCHITECT · JOHN P. SPARANO · EXP. 4-30-19 · STATE OF CALIFORNIA

SWIMMING POOL & BATH HOUSE for GRANADA HILLS RECREATION CENTER
16730 CHATSWORTH STREET, LOS ANGELES.
DEPARTMENT OF RECREATION & PARKS
LOS ANGELES, CALIFORNIA.

TITLE: POOL EQUIPMENT BUILDING.

DATE PRINTED

DRAWN	DATE
[illegible]	6-26-19
CHECK	DATE
KW	6/27/19
JOB	
4259	
SHEET	
A·7	

BUREAU OF ENGINEERING · OFFICIAL RECORD

GARY LEE MOORE, PE, ENV SP
CITY ENGINEER

	DATE:
ARCHITECT/ENGINEER: JOHN SPARANO LIC. NO.: LICENSE	
DESIGNED BY: Designer	1/11/19
DRAWN BY: Author	1/11/19
CHECKED BY: Checker	1/11/19
APPROVED BY: Approver	1/11/19

VERTICAL CONTROL:
HORIZONTAL CONTROL:
SHEET TITLE: AS-BUILT A-7

PROJECT: GRANADA HILLS POOL AND BATHHOUSE REPLACEMENT PROJECT
ADDRESS: 16730 CHATSWORTH STREET GRANADA HILLS, CA 91344

90% CONSTRUCTION DOCUMENTS
PROJECT ISSUE DATE: 1/11/19

CITY OF LOS ANGELES

WORK ORDER NO. #E170517
PLAN FILE NO. #308
DRAWING NO. A0.07
SHEET 0 OF SHEETS

PLOTTED:1/14/2019 12:05:38 AM

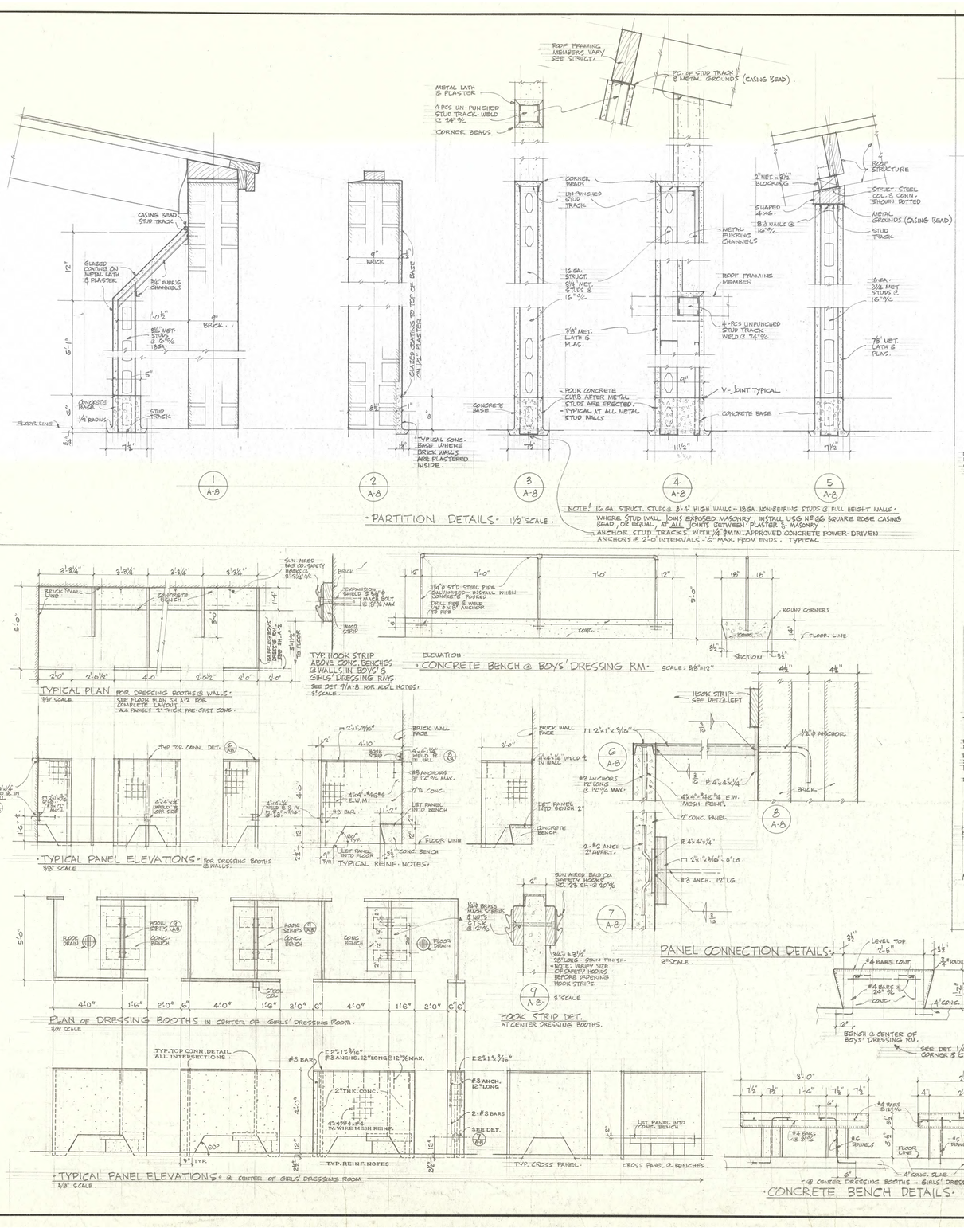
CASING BEAD STUD TRACK
GLAZED CONTAINS ON METAL LATH & PLASTER.
3/4" FURRG CHANNELS
1'-0 1/2"
3 5/8" MET. STUDS @ 16"o/c 18GA.
4" BRICK.
12"
G'-1"
5"
CONCRETE BASE
1/2 RADIUS
STUD TRACK
FLOOR LINE
5 1/2"
7 5/8"
9" BRICK
GLAZED CONTAINS ON 1/2" PLASTER.
8 1/2"
1"
18"
TYPICAL CONC. BASE WHERE BRICK WALLS ARE PLASTERED INSIDE.
CONCRETE BASE
7 5/8"
ROOF FRAMING MEMBERS VARY SEE STRUCT.
PC. OF STUD TRACK & METAL GROUNDS (CASING BEAD).
METAL LATH & PLASTER
4 PCS UN-PUNCHED STUD TRACK: WELD @ 24" o/c
CORNER BEADS
CORNER BEADS
UN-PUNCHED STUD TRACK
METAL FURRING CHANNELS
16 GA. STRUCT. 3 5/8" MET. STUDS @ 16" o/c
7/8" MET. LATH & PLAS.
POUR CONCRETE CURB AFTER METAL STUDS ARE ERECTED. TYPICAL AT ALL METAL STUD WALLS
11 1/2"
ROOF FRAMING MEMBER
4 PCS UNPUNCHED STUD TRACK: WELD @ 24" o/c
V-JOINT TYPICAL
CONCRETE BASE
2" MET. x 3 1/2" BLOCKING
ROOF STRUCTURE
STRUCT. STEEL COL. & CONN. SHOWN DOTTED
SHAPED 4 x G.
B.D NAILS @ 16" o/c
METAL GROUNDS (CASING BEAD)
STUD TRACK
18 GA. 3 5/8" MET STUDS @ 16" o/c
7/8" MET. LATH & PLAS.
1 A-8
2 A-8
3 A-8
4 A-8
5 A-8
"PARTITION DETAILS" 1 1/2" SCALE.
NOTE! 16 GA. STRUCT. STUDS @ 8'-4" HIGH WALLS - 18GA. NONBEARING STUDS @ FULL HEIGHT WALLS.
WHERE STUD WALL JOINS EXPOSED MASONRY, INSTALL USG NO. 66 SQUARE EDGE CASING BEAD, OR EQUAL, AT ALL JOINTS BETWEEN PLASTER & MASONRY.
ANCHOR STUD TRACKS WITH 1/4" DIA. APPROVED CONCRETE POWER-DRIVEN ANCHORS @ 2'-0" INTERVALS - 2" MAX. FROM ENDS. TYPICAL
1'-6 3/8" BINDER PANEL
2'-4" DOOR
2'-7 1/2"
2'-8"
2'-0"
2'-6"
2'-4"
TILE ASTRAGAL
7'-0"
6'-8"
DUTCH DOOR.
3'-4"
METAL LOUVERS
8 3/4"
4 3/4"
5 3/8"
UNDER CUT DOORS 1"
1
1A OPPOSITE HAND.
2
3 7
4
5
6
8
9
10
11
DOOR SCHEDULE - 1/4" SCALE.
ALL DOORS 1 3/4" THICK METAL COVERED.
2'-0"
2'-8"
3'-0"
4'-0"
18
14
7'-0"
7'-0"
METAL LOUVERS
8 3/4"
ASTRAGAL
METAL LOUVERS
4 3/4"
5 3/8"
UNDERCUT DOORS 1"
PRESSED STEEL FRAME
2'-6"
7'-0"
OPEN
12
13
14 18
15
16 17
NOTE! 4" MET. STUDS @ 16"
7/8" MET. LATH & PLAS.
3 5/8" METAL STUDS
DOUBLE METAL STUDS @ DOORS
PROVIDE 4 ANCH. PER JAMB
V-JOINT PLASTER TYPICAL
FILL FRAMES WITH GROUT IN ADDITION TO ANCHORS
16 GA. PRESSED STEEL FRAME
OMIT STOP @ 16 & 17
15/16"
15/16"
STOP DOOR FRAME AT TOP OF CONC. BASE AT PLASTER WALLS.
CONCRETE BASE
FRAME @ DOOR
2
2"x6" STEEL TUBE @ HEAD & JAMBS
16 GA. PRESSED STEEL FRAME.
9"
BRICK
FILL FRAMES WITH GROUT IN ADDITION TO ANCH.
PROVIDE 4 MASONRY ANCHORS PER JAMB & BUILD INTO BRICK WALL
1 1/2"
15/16"
15/16"
5 1/2"
TYPICAL DOOR FRAMES AT BRICK WALLS
TYPICAL DOOR FRAMES AT PLASTER WALLS.
BRICK
JAMB.
FIXED PANEL
FLAT HEAD SCREWS @ 12" o/c
DOOR
HALF-SURFACE HINGE - LEFT HND DOOR.
MULLION.
L 1 1/4 x 1 1/4 x 3/16 FLAT HEAD MACH. SCREWS @ 12" o/c
TEK ACTRACAL - FASTEN AT FLOOR & HEAD
2 - SLIB.T & SIB. 1/2 x 1 STOPS SEE DET. SH. A-8, ALSO STRUCT. DRWGS.
FRONT ENTRANCE DOOR FRAME.
"DOOR FRAME DETAILS"
3" SCALE
5'-0 7/8"
4'-8"
1 1/8"
4'-1"
A
B
C
INDUSTRIAL STEEL SASH GLAZED WITH 125 MIL. "LEXAN" SHEET # 9034 - TIS "SOLAR GRAY". (TYP. @ ALL SASH.)
WINDOW SCHEDULE - 1/4" SCALE
HEAD.
NEOPRENE SPACERS
10 FLAT HEAD SCREWS @ 15 3/16" MAX.
JAMB.
NOTE.
SPACERS TO BE NEOPRENE RUBBER WITH A SHORE HARDNESS OF 55±5 MIN. WIDTH 1" VERIFY THICKNESS
SILL.
LEAD SHIELDS
CONCRETE SILL.
WINDOW DIMENSION
"WINDOW DETAILS" 3" FULL SIZE
SUN-ARED BAS CO. SAFETY HOOKS @ 5'-5 3/4" o/c
BRICK WALL
CONCRETE COPING
EXPANSION SHIELD & 3/8" o/c MACH. BOLT @ 18" o/c MAX
WOOD CURB
EXPANSION SHIELD @ 18" o/c MAX
FLEXIBLE WATERPROOF SEAL
5'-0"
2'-0"
2'-6 3/4"
4'-0"
2'-0 1/2"
2'-0"
2'-0"
TYPICAL PLAN FOR DRESSING BOOTHS & WALLS.
3/8" SCALE
ONE FLOOR PLAN SH. A-2 FOR COMPLETE LAYOUT
ALL PANELS 2" THICK PRE-CAST CONC.
TYP. HOOK STRIP ABOVE CONC. BENCHES @ WALLS IN BOYS' & GIRLS' DRESSING RMS.
SEE DET. 9/A-8 FOR ADD'L NOTES.
3" SCALE.
12"
7'-0"
12"
6"
8"
1 1/4" STD. STEEL PIPE GALVANIZED - INSTALL WHEN CONCRETE POURED.
DRILL PIPE & WELD 1/2" x 8" ANCHOR TO PIPE
CONC.
18"
18"
ROUND CORNERS
FLOOR LINE
CONC.
3 1/2"
3 1/2"
SECTION
ELEVATION.
"CONCRETE BENCH @ BOYS' DRESSING RM." SCALE: 3/8"=1'-0"
TYPICAL PANEL ELEVATIONS" FOR DRESSING BOOTHS & WALLS.
3/8" SCALE
TYP. TOP CONN. DET.
4'-10"
BRICK WALL FACE
3 @ 8" = 2'-0"
#3 ANCHORS @ 12" o/c MAX.
7" CONC.
LET PANEL INTO BENCH
#3 BAR
4'-0"
1'-6"
2'-0"
LET PANEL INTO FLOOR
CONC. BENCH
4" TYP.
TYPICAL REINF. NOTES.
BRICK WALL FACE
3'-0"
CONCRETE BENCH
LET PANEL INTO BENCH 2
HOOK STRIP - SEE DET. LEFT
3/16
1/2" ø ANCHOR
BRICK
#3 ANCHORS 12" LONG @ 12" o/c MAX.
4'-4" x 4'-4" x 3/4" E.W. MESH REINF.
2" CONC. PANEL
2-#3 ANCH. 2" APART.
#3 ANCH. 12" LG.
PANEL CONNECTION DETAILS
3" SCALE.
LEVEL TOP
2'-5"
3 1/2"
3 1/2"
#4 BARS CONT.
3/4" RADIUS TYPICAL
#4 CONT.
#4 BARS @ 24" o/c
CONC.
A1 CONC. SLAB
#4 BARS @ 24" o/c
6"
6"
BENCH @ CENTER OF BOYS' DRESSING RM.
BENCH @ DRESSG. RM. WALLS
SEE DET. 1/A2 FOR ROUNDED CORNER & CHAMFER NOTES
BRICK WALL
3/4" CHAMFER
TYP. HOOK STRIPS @ 18" o/c
CONC. BENCH
FLOOR DRAIN
STEP CONC.
4'-0"
1'-6"
2'-0"
6"
4'-0"
1'-6"
2'-0"
6"
4'-0"
1'-6"
2'-0"
6'-6"
PLAN OF DRESSING BOOTHS IN CENTER OF GIRLS' DRESSING ROOM.
3/8" SCALE
5'-0"
10 @ BRASS MACH. SCREWS & NUTS 1 TYP. @ 12" o/c
3 1/4" x 3 1/4" 20 GA. LONG - SATIN FINISH
NOTE: VERIFY SIZE OF SAFETY HOOKS BEFORE DRILLING HOOK STRIPS.
3" SCALE
HOOK STRIP DET. AT CENTER DRESSING BOOTHS.
TYP. TOP CONN. DETAIL ALL INTERSECTIONS
#3 BAR
2"x2"x3/16" #3 ANCHS. 12" LONG @ 12" o/c MAX.
2"x2"x3/16"
#3 ANCH. 12" LONG
2-#3 BARS
SEE DET.
2" THK. CONC.
4'-0"
4'-4" x 4'-4" x 4" W. WIRE MESH REINF.
90°
9" TYP.
12"
TYP. REINF. NOTES
LET PANEL INTO CONC. BENCH
TYP. CROSS PANEL.
CROSS PANEL @ BENCHES.
"TYPICAL PANEL ELEVATIONS" @ CENTER OF GIRLS' DRESSING ROOM.
3/8" SCALE.
8'-10"
7 1/2"
7 1/2"
1'-4"
7 1/2"
7 1/2"
6"
#6 BARS @ 8" o/c
#6 DOWELS
#4 BARS @ 8" o/c
#6 DOWELS
6"
6"
4'-0" CONC. SLAB
4"
2'-8"
2'-0"
4"
NOTCH FOR PANEL
3/4" RADIUS TYPICAL
3/4" CHAMFER
"@ CENTER DRESSING BOOTHS - GIRLS' DRESS'G. RM.
"CONCRETE BENCH DETAILS" SCALE: 3/4"=1'-0"
REVISIONS
BLDG. DEPT JAN. 4, 1973
BID SET - 1/23/73
BUTTRESS, McCLELLAN & MARKWITH INC.
DENVER MARKWITH JR. ARCHITECT
RAYMOND L. SMULLIN ENGINEER
6456 YORK BOULEVARD
LOS ANGELES 42 CLINTON 4-4351
SWIMMING POOL & BATH HOUSE for GRANADA HILLS RECREATION CENTER
16730 CHATSWORTH STREET, LOS ANGELES.
DEPARTMENT OF RECREATION & PARKS
LOS ANGELES, CALIFORNIA
BUREAU OF ENGINEERING
OFFICIAL RECORD
title PARTITION, DOOR & WINDOW DETAILS.
DATE PRINTED
DRAWN 6-15-70
CHECK 12/2/70
JOB 4259
SHEET A8
000076
BUREAU OF ENGINEERING
CITY OF LOS ANGELES
NO. REVISION DESCRIPTION DATE BY
BUILDING NO. -
INDEX NO. RP-300118
CITY OF LOS ANGELES
DEPARTMENT OF PUBLIC WORKS
GARY LEE MOORE, PE, ENV SP CITY ENGINEER
CITY ENGINEER DATE:
VERTICAL CONTROL:
HORIZONTAL CONTROL:
ARCHITECT/ENGINEER: JOHN SPARANO LIC. NO.: LICENSE
DESIGNED BY: Designer
DRAWN BY: Author
CHECKED BY: Checker
APPROVED BY: Approver
1/1/19
SHEET TITLE: AS-BUILT A-8
PROJECT: GRANADA HILLS POOL AND BATHHOUSE REPLACEMENT PROJECT
ADDRESS: 16730 CHATSWORTH STREET GRANADA HILLS, CA 91344
90% CONSTRUCTION DOCUMENTS
PROJECT ISSUE DATE: 1/11/19
WORK ORDER NO. #E170517
PLAN FILE NO. #308
DRAWING NO. A0.08
SHEET 8 OF SHEETS
PLOTTED:1/14/2019 12:07:47 AM
"AS-BUILT" DRAWING FOR REFERENCE ONLY (NOT TO SCALE)
GENERAL NOTES: 1. NOT TO SCALE 2. DIMENSIONS TO BE VERIFIED IN FIELD
THE CITY OF LOS ANGELES OR ITS OFFICERS OR AGENTS SHALL NOT BE RESPONSIBLE FOR THE ACCURACY OR COMPLETENESS OF ELECTRONIC COPIES OF THIS PLAN SHEET.
REVISION DATES (DESIGN STAGE ONLY)
TTLB TEMPLATE REVISION DATE: 02/2013
SHEET ISSUE DATE: 10/07/18
FILE PATH: BIM 360://Granada Hills Pool Renovation/A_Granada-Hills_2017.rvt

THE CITY OF LOS ANGELES OR ITS OFFICERS OR AGENTS SHALL NOT BE RESPONSIBLE FOR THE ACCURACY OR COMPLETENESS OF ELECTRONIC COPIES OF THIS PLAN SHEET.

TTLB TEMPLATE REVISION DATE: 02/2013
SHEET ISSUE DATE: 10/07/18
FILE PATH: BIM 360://Granada Hills Pool Renovation/A_Granada-Hills_2017.rvt

REVISION DATES (DESIGN STAGE ONLY)

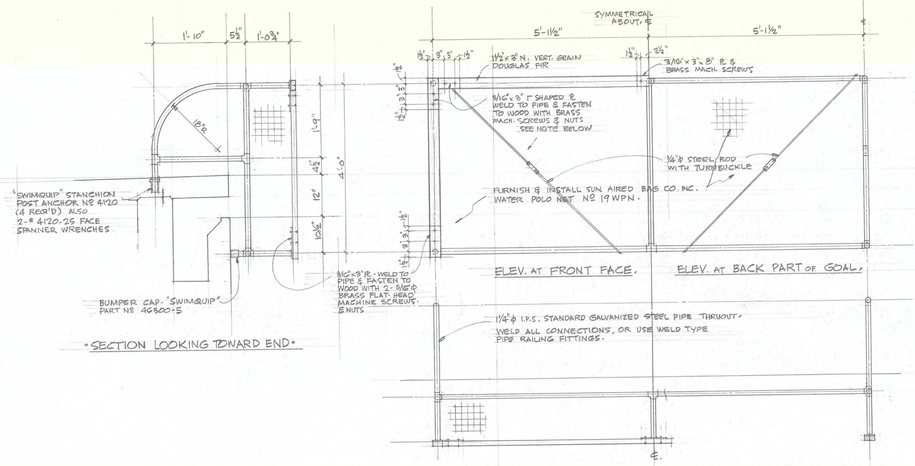

SYMMETRICAL ABOUT ℄
5'-11½"
5'-11½"
1½"x 8" N. VERT. GRAIN DOUGLAS FIR
3/16"x 3" x 8" R. H. BRASS MACH. SCREWS
¾"x ¾"x ⅛" ANGLE
¾"x ¾"x ⅛"
¾"x ¾"x ⅛"
¾"x ¾"x ⅛"

THE CITY OF LOS ANGELES OR ITS OFFICERS OR AGENTS SHALL NOT BE RESPONSIBLE FOR THE ACCURACY OR COMPLETENESS OF ELECTRONIC COPIES OF THIS PLAN SHEET.

TTLB TEMPLATE REVISION DATE: 02/2013
SHEET ISSUE DATE: 10/07/18
FILE PATH: BIM 360://Granada Hills Pool Renovation/A_Granada-Hills_2017.rvt

REVISION DATES (DESIGN STAGE ONLY)

NOTE · POUR DECK SLAB IN ALTERNATE AREAS BETWEEN CONSTRUCTION JOINTS & OR EXPANSION JOINTS

NOTE · SEE SHTS. A-7 & S-2 FOR PLANS, ELEVS. & DETAILS OF POOL EQUIPMENT BLDG.

NOTE · SEE SHT. A-2 FOR ELEVS. OF POOL FLOOR & DECK

NOTE · BEFORE POURING CONCRETE IN POOL, OBTAIN ELECTRICAL INSPECTION CLEARANCE FOR GROUNDING OF REINFORCING, PLUMBING & CONDUIT PRIOR TO BUILDING INSPECTOR'S APPROVAL.

FOUNDATION PLAN
1/8" = 1'-0"

FRONT ENTRANCE ☐ FRAME BASE DETAIL
1/2" = 1'-0"

LEGEND ·
W.P.J. = "WEAKENED PLANE JOINT" MAY BE CONT. PLASTIC "QUICKJOINT" BY J.A. CRAWFORD CO. SANTA FE SPRINGS, CALIF. (OR APPROVED EQ.) OR 1/8"x1" CONT. MASONITE STRIP OR 1/8"x1" CONT. SAWCUT. RUN STRAIGHT & FLUSH W/FIN. SURFACE
C.J. = CONSTRUCTION JOINT
E.J. = EXPANSION JOINT
= 9" BRICK WALL @ BATH HOUSE
= 8½" BRICK WALL @ EQUIPMENT BLDG.
● = CONC. WALK & RAMP AREAS SHALL BE REINFORCED WITH 6"x6"/#10x#10 W. WIRE MESH

"AS-BUILT" DRAWING FOR REFERENCE ONLY (NOT TO SCALE)

GENERAL NOTES: 1. NOT TO SCALE 2. DIMENSIONS TO BE VERIFIED IN FIELD

REVISIONS
BLDG. DEPT.-1/4/73
BID SET - 1/29/73

BUREAU OF ENGINEERING OFFICIAL RECORD

BUTTRESS, McCLELLAN & MARKWITH INC.
DENVER MARKWITH JR. ARCHITECT
RAYMOND L. SMULLIN ENGINEER
6456 YORK BOULEVARD
LOS ANGELES 42 CLINTON 4-4351

SWIMMING POOL & BATH HOUSE for GRANADA HILLS RECREATION CENTER
16730 CHATSWORTH STREET, LOS ANGELES
DEPARTMENT OF RECREATION & PARKS
LOS ANGELES, CALIFORNIA

TITLE: FOUNDATION PLAN & DETAILS

DATE PRINTED

DRAWN	DATE
JBT	6/26/70
CHECK	DATE
RLS.	12-21-70
JOB	4259
SHEET	S-1

DEPARTMENT OF PUBLIC WORKS
BUREAU OF ENGINEERING
CITY OF LOS ANGELES

ENGINEERING
CITY OF LOS ANGELES

NO.	REVISION DESCRIPTION	DATE	BY

BUILDING NO. -

INDEX NO. RP-300118

CITY ENGINEER
VERTICAL CONTROL:
HORIZONTAL CONTROL:
DATE: 1/1/19

GARY LEE MOORE, PE., ENV SP
CITY ENGINEER
ARCHITECTURAL DIVISION
ARCHITECT/ENGINEER: JOHN SPARANO LIC. NO.: LICENSE
DESIGNED BY: Designer
DRAWN BY: Author
CHECKED BY: Checker
APPROVED BY: Approver

SHEET TITLE: AS-BUILT S-1

PROJECT: GRANADA HILLS POOL AND BATHHOUSE REPLACEMENT PROJECT
ADDRESS: 16730 CHATSWORTH STREET GRANADA HILLS, CA 91344

90% CONSTRUCTION DOCUMENTS
PROJECT ISSUE DATE: 1/11/19

WORK ORDER NO. #E170517
PLAN FILE NO. #308
DRAWING NO. A0.10
SHEET OF SHEETS

PLOTTED:1/14/2019 12:12:02 AM

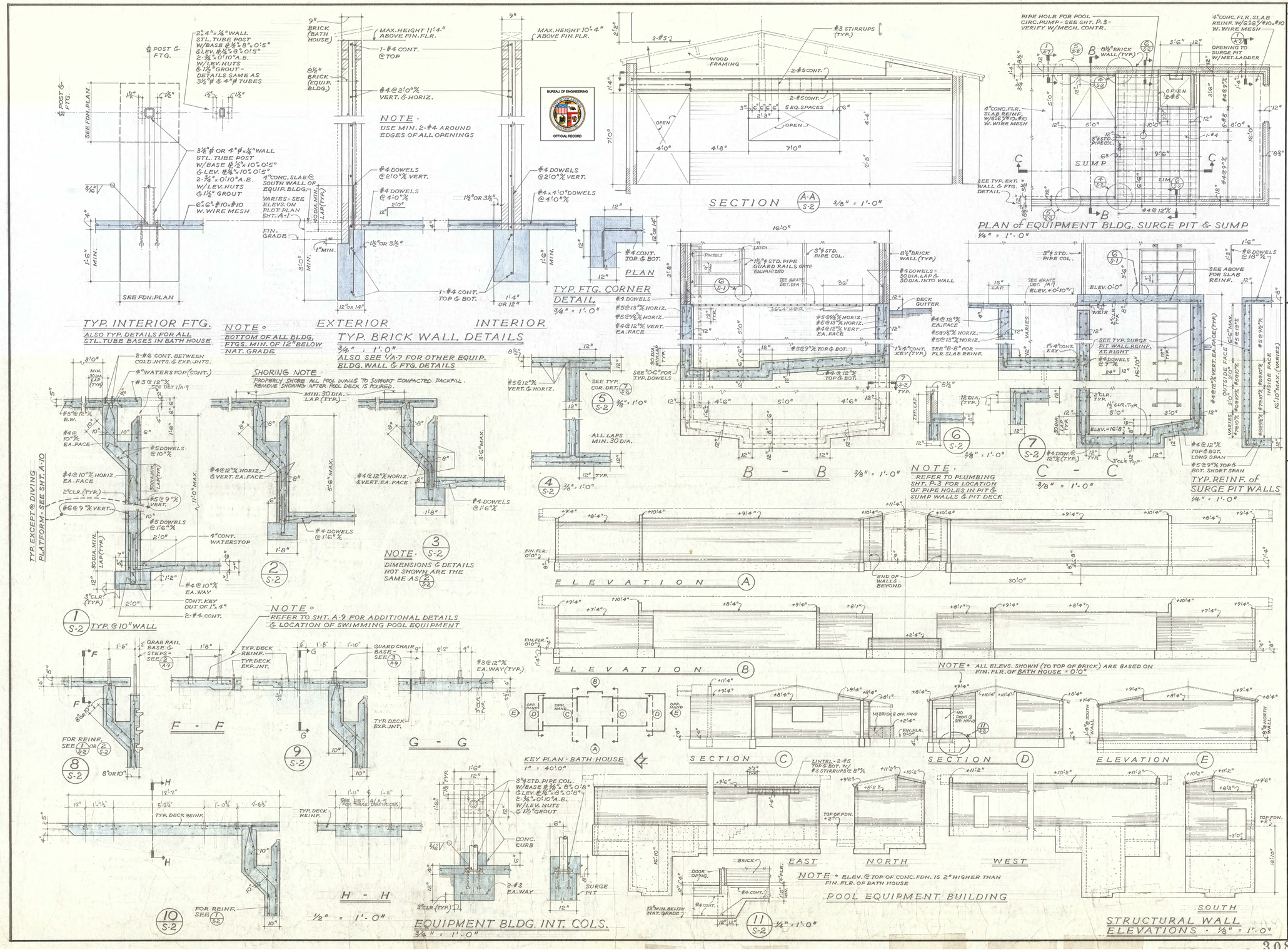

"AS-BUILT" DRAWING FOR REFERENCE ONLY (NOT TO SCALE)

GENERAL NOTES: 1. NOT TO SCALE 2. DIMENSIONS TO BE VERIFIED IN FIELD

REVISIONS
BLDG. DEPT. 1/4/73
BID SET - 1/29/73

BUTTRESS, McCLELLAN & MARKWITH INC.
DENVER MARKWITH JR. ARCHITECT
RAYMOND L. SMULLINS ENGINEER
6450 YORK BOULEVARD
LOS ANGELES 42 CLINTON 4-4351

SWIMMING POOL & BATH HOUSE for GRANADA HILLS RECREATION CENTER
16730 CHATSWORTH STREET, LOS ANGELES.
DEPARTMENT OF RECREATION & PARKS
LOS ANGELES, CALIFORNIA

TITLE: STRUCTURAL WALL ELEVATIONS - SECTIONS - DETAILS

DATE PRINTED

DRAWN	DATE
JBT	6-26-70
CHECK	DATE
RLS	12-21-70
JOB	
4259	
SHEET	
S-2	

308 A 5

DEPARTMENT OF PUBLIC WORKS
BUREAU OF ENGINEERING
ENGINEERING
CITY OF LOS ANGELES

NO.	REVISION DESCRIPTION	DATE	BY

INDEX NO. RP-300118
BUILDING NO. -

LICENSED ARCHITECT JOHN P. SPARANO 4-30-19 STATE OF CALIFORNIA

GARY LEE MOORE, PE, ENV SP
ARCHITECT/ENGINEER: JOHN SPARANO LIC. NO.: LICENSE
ARCHITECTURAL DIVISION

	CITY ENGINEER	DATE:
DESIGNED BY:	Designer	1/11/19
DRAWN BY:	Author	1/11/19
CHECKED BY:	Checker	1/11/19
APPROVED BY:	Approver	1/11/19

VERTICAL CONTROL:
HORIZONTAL CONTROL:
SHEET TITLE: AS-BUILT S-2
PROJECT: GRANADA HILLS POOL AND BATHHOUSE REPLACEMENT PROJECT
ADDRESS: 16730 CHATSWORTH STREET GRANADA HILLS, CA 91344

90% CONSTRUCTION DOCUMENTS
PROJECT ISSUE DATE: 1/11/19

CITY OF LOS ANGELES

WORK ORDER NO. #E170517
PLAN FILE NO. #308
DRAWING NO. A0.11
SHEET OF SHEETS

PLOTTED:1/14/2019 12:14:48 AM

THE CITY OF LOS ANGELES OR ITS OFFICERS OR AGENTS SHALL NOT BE RESPONSIBLE FOR THE ACCURACY OR COMPLETENESS OF ELECTRONIC COPIES OF THIS PLAN SHEET.

TTLB TEMPLATE REVISION DATE: 02/2013
SHEET ISSUE DATE: 10/07/18
FILE PATH: BIM 360://Granada Hills Pool Renovation/A_Granada-Hills_2017.rvt
REVISION DATES (DESIGN STAGE ONLY)

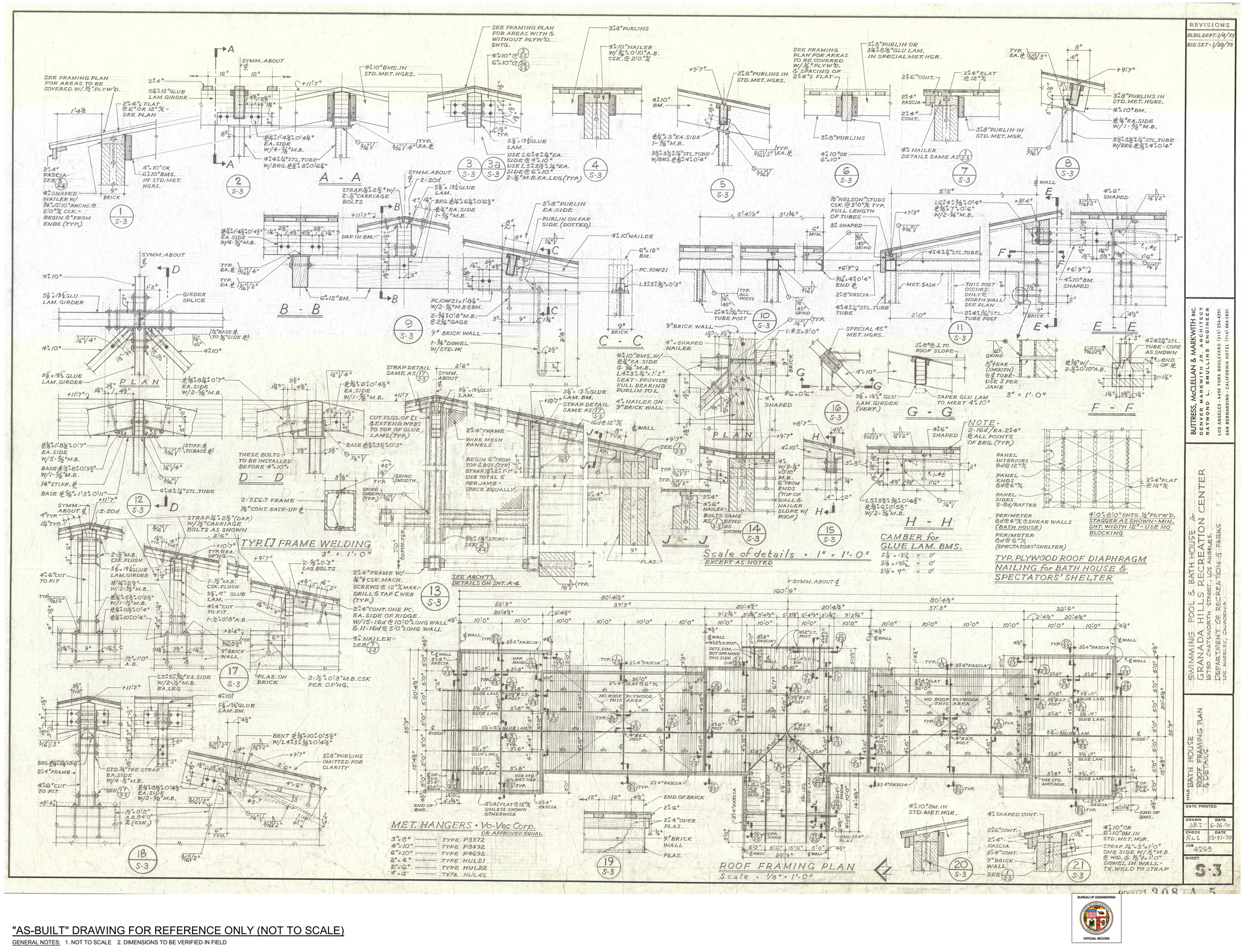

REVISIONS

BLDG. DEPT: 1/4/73
BID SET - 1/29/73

BUREAU OF ENGINEERING
DEPARTMENT OF PUBLIC WORKS
CITY OF LOS ANGELES

ENGINEERING
CITY OF LOS ANGELES

NO.	REVISION DESCRIPTION	DATE	BY

BUILDING NO. -

INDEX NO. RP-300118

BUTTRESS, McCLELLAN & MARKWITH INC.
DENVER MARKWITH JR. ARCHITECT
RAYMOND L. SMULLINS ENGINEER
LOS ANGELES - 6456 YORK BOULEVARD (213) 254-4351
SAN BERNARDINO - CALIFORNIA HOTEL (714) 884-1831

LICENSED ARCHITECT C-22244 JOHN P. SPARANO STATE OF CALIFORNIA

DEPARTMENT OF PUBLIC WORKS
CITY OF LOS ANGELES

GARY LEE MOORE, PE, ENV SP — CITY ENGINEER — DATE:

VERTICAL CONTROL:	
HORIZONTAL CONTROL:	
SHEET TITLE: AS-BUILT S-3	

ARCHITECT/ENGINEER: JOHN SPARANO LIC. NO.: LICENSED

DESIGNED BY: Designer	1/1/19
DRAWN BY: Author	1/1/19
CHECKED BY: Checker	1/1/19
APPROVED BY: Approver	1/1/19

PROJECT: GRANADA HILLS POOL AND BATHHOUSE REPLACEMENT PROJECT
ADDRESS: 16730 CHATSWORTH STREET GRANADA HILLS, CA 91344

SWIMMING POOL & BATH HOUSE for GRANADA HILLS RECREATION CENTER
16730 CHATSWORTH STREET, LOS ANGELES
DEPARTMENT OF RECREATION & PARKS
LOS ANGELES, CALIFORNIA

TITLE: BATH HOUSE ROOF FRAMING PLAN & DETAILS

DATE PRINTED

DRAWN	DATE
LBT	6-26-70
CHECK	DATE
RLS	12-21-70
JOB	
4259	
SHEET	
S-3	

WORK ORDER NO. #E170517
PLAN FILE NO. #308
DRAWING NO. A0.12
SHEET OF SHEETS

90% CONSTRUCTION DOCUMENTS
PROJECT ISSUE DATE: 1/11/19

BUREAU OF ENGINEERING OFFICIAL RECORD

PLOTTED: 1/14/2019 12:17:34 AM

THE CITY OF LOS ANGELES OR ITS OFFICERS OR AGENTS SHALL NOT BE RESPONSIBLE FOR THE ACCURACY OR COMPLETENESS OF ELECTRONIC COPIES OF THIS PLAN SHEET.

TTLB TEMPLATE REVISION DATE: 02/2013
SHEET ISSUE DATE: 10/07/18
FILE PATH: BIM 360://Granada Hills Pool Renovation/A_Granada-Hills_2017.rvt

REVISION DATES (DESIGN STAGE ONLY)

THE CITY OF LOS ANGELES OR ITS OFFICERS OR AGENTS SHALL NOT BE RESPONSIBLE FOR THE ACCURACY OR COMPLETENESS OF ELECTRONIC COPIES OF THIS PLAN SHEET.

TTLB TEMPLATE REVISION DATE: 02/2013
SHEET ISSUE DATE: 10/07/18
FILE PATH: BIM 360://Granada Hills Pool Renovation/A_Granada-Hills_2017.rvt

REVISION DATES (DESIGN STAGE ONLY)

EQUIPMENT BLDG.- ROOF FRAMING PLAN
1/8" = 1'-0"

SPECTATORS' SHELTER - ROOF FRAMING PLAN
1/8" = 1'-0"
SEE SHT. S-3 FOR PLYWOOD ROOF NAILING SCHEDULE

EQUIPMENT BLDG. PLYWOOD ROOF DIAPHRAGM NAILING SCHEDULE

PERIPHERY	8d @ 4" ℄
PANEL EDGES	8d @ 4" ℄
PANEL INTERIORS	8d @ 12" ℄

USE 4'0" x 8'0" SHTS. ½" PLYWOOD - STAGGER SHEETS AS SHOWN - MIN. SHT. WIDTH 12" - USE 2"x4" BLKG. @ PANEL EDGES W/ 4" DIM. VERTICAL

TYP. BASE ℄ DETAIL
1" = 1'-0"

Scale of details • 1" = 1'-0"

C - C TYP. FRAME
½" = 1'-0"

D - D TYP. END
½" = 1'-0"

NOTE •
WALL & SLAB THICKNESSES SHOWN ARE MINIMUMS & MAY BE INCREASED TO CONFORM TO PROFILE OF FINISHED COMPACTED SUBGRADE

SEE 5/E-2 FOR EL.EC. CONDUIT DETAIL THRU BASE ℄ - (ONE ONLY)

POOL DETAILS Scale • 1½" = 1'-0"

GENERAL NOTES

1. REFER TO SOIL REPORT - CITY OF LOS ANGELES, DEPT. OF PUBLIC WORKS REPORT DATED MAY 20, 1969 FOR GRANADA HILLS SWIMMING POOL, ETC. TAKE PARTICULAR CARE IN PLACING EARTH BACKFILL & FILL AROUND POOL DECK AS SPECIFIED & IN CONFORMANCE WITH THE SOIL REPORT. SOIL TYPE 'LEAN CLAY' 2000#/q'.
2. CONCRETE - USED IN SWIMMING POOL WALLS & FLOOR, SURGE PIT & SUMP SHALL BE METHOD I WITH MINIMUM f'c 4000 #/q" @ 28 DAYS - CONTINUOUS INSPECTION IS REQ'D. ALL OTHER CONCRETE SHALL HAVE AN f'c = 2500 #/q" @ 28 DAYS - DESIGN STRENGTH USED IN CALCULATIONS = 2000 #/q" - CONTINUOUS INSPECTION NOT REQ'D, WORKING STRESS METHOD OF DESIGN
3. REINFORCING STEEL - SHALL BE INTERMEDIATE GRADE DEFORMED BARS & SHALL CONFORM TO A.S.T.M. A615 GRADE 40. DEFORMATIONS SHALL BE AS PER A.S.T.M. A305 - LAPS & SPLICES SHALL BE A MIN. OF 30 DIA. IN CONC. & MIN. 40 DIA. IN MASONRY
4. STRUCTURAL STEEL - SHALL COMPLY WITH THE "STD. SPECIFICATIONS FOR STRUCTURAL STEEL FOR BRIDGES & BUILDINGS" A.S.T.M. A36 - SHOP DRAWINGS SHALL BE SUBMITTED TO THE ARCHITECT FOR APPROVAL BEFORE FABRICATION
5. WELDING - ELECTRIC ARC PROCESS PERFORMED BY L.A. CITY CERTIFIED WELDERS. SHOP WELDS TO BE PERFORMED IN SHOP OF L.A. CITY LICENSED FABRICATOR. FIELD WELDS CALCULATED @ ½ STRESS - NO CONTINUOUS INSPECTION REQ'D.
6. STRUCTURAL LUMBER - ALL FRAMING LUMBER TO BE DOUGLAS FIR SELECT STRUCTURAL - 2"x4" FLAT IN ROOF SYSTEM TO HAVE FINISH GRADE OF "C AND BETTER"
7. STRUCTURAL GLUE LAM. TIMBER SHALL BE DOUGLAS FIR COMBINATION "A" PER 2900 S & SHALL BE FABRICATED BY A L.A. CITY APPROVED FABRICATOR & SHALL PROVIDE THE BLDG. DEPT. WITH CERTIFICATE OF COMPLIANCE TO LATEST L.A. CITY BLDG. CODE
8. PLYWOOD SHEATHING - SHALL BE DOUGLAS FIR "STRUCTURAL" 1C-C WITH EXTERIOR GLUE PER PS-1-66
9. MASONRY - BRICK SHALL BE M.W. GRADE PER A.S.T.M. C62 CONTINUOUS INSPECTION IS REQUIRED
10. GROUT - 1:3:2 CEMENT, SAND & ⅜" MAX. PEA GRAVEL WITH f'c = 2000 #/q" @ 28 DAYS
11. MORTAR - 1:3½ : ¼ CEMENT, SAND & LIME
12. DRYPACK - SHALL BE 1:3 CEMENT & SAND MIX
13. B.T.U. INPUT RATING OF POOL BOILER = 2,170,000 B.T.U./HR. 2 HOT WATER HEATERS @ 250,000 B.T.U./HR. EACH = 500,000 B.T.U./HR.
14. ℄ = LEGAL EXIT "TO BE OPENABLE FROM THE INSIDE WITHOUT THE USE OF A KEY OR SPECIAL KNOWLEDGE

COMPOSITION ROOFING
TYPE ----
20 YEAR BONDABLE TYPE SIMILAR TO JOHNS-MANVILLE MINERAL SURFACE ASBESTOS SPEC. #425 FS CONSISTING OF
2 LAYERS ASBESTOS FELT — 30#
1 LAYER WHITE MINERAL SURFACE ASBESTOS CAP — 80#
BITUMEN — 50#
TOTAL WEIGHT PER SQUARE — 160#

REVISIONS	
BLDG. DEPT. - 1/4/73	
BID SET - 1/29/73	

NO.	REVISION DESCRIPTION	DATE	BY

BUILDING NO. -

INDEX NO. RP-300118

BUREAU OF ENGINEERING
CITY OF LOS ANGELES
ENGINEERING

DEPARTMENT OF PUBLIC WORKS
CITY OF LOS ANGELES

GARY LEE MOORE, PE, ENV SP
CITY ENGINEER

VERTICAL CONTROL:
HORIZONTAL CONTROL:

ARCHITECT/ENGINEER: JOHN SPARANO	LIC. NO.: LICENSE	DATE:
ARCHITECTURAL DIVISION		
DESIGNED BY: Designer		1/1/19
DRAWN BY: Author		1/1/19
CHECKED BY: Checker		1/1/19
APPROVED BY: Approver		1/1/19

SHEET TITLE: AS-BUILT S-4

PROJECT: GRANADA HILLS POOL AND BATHHOUSE REPLACEMENT PROJECT

ADDRESS: 16730 CHATSWORTH STREET GRANADA HILLS, CA 91344

BUTTRESS, McCLELLAN & MARKWITH INC.
DENVER MARKWITH, JR. ARCHITECT
RAYMOND L. SMULLIN ENGINEER
6455 YORK BOULEVARD
LOS ANGELES 42 CLINTON 4-4351

LICENSED ARCHITECT — JOHN P. SPARANO — LIC. 12244 — EXP. 4-30-19 — STATE OF CALIFORNIA

SWIMMING POOL & BATH HOUSE for GRANADA HILLS RECREATION CENTER
16730 CHATSWORTH STREET, LOS ANGELES
DEPARTMENT OF RECREATION & PARKS
LOS ANGELES, CALIFORNIA

TITLE: EQUIPMENT BLDG. & SPECTATORS' SHELTER ROOF FRAMING PLANS & DETAILS

DATE PRINTED

DRAWN	DATE
JBT	6-26-70
CHECK	DATE
RLS	12-21-70

JOB 4259

SHEET S-4

90% CONSTRUCTION DOCUMENTS
PROJECT ISSUE DATE: 1/11/19

WORK ORDER NO. #E170517
PLAN FILE NO. #308
DRAWING NO. A0.13
SHEET A OF SHEETS

PLOTTED: 1/14/2019 12:20:01 AM

"AS-BUILT" DRAWING FOR REFERENCE ONLY (NOT TO SCALE)

GENERAL NOTES: 1. NOT TO SCALE 2. DIMENSIONS TO BE VERIFIED IN FIELD

BUREAU OF ENGINEERING OFFICIAL RECORD

000070 308 A 5

THE CITY OF LOS ANGELES OR ITS OFFICERS OR AGENTS SHALL NOT BE RESPONSIBLE FOR THE ACCURACY OR COMPLETENESS OF ELECTRONIC COPIES OF THIS PLAN SHEET.

TTLB TEMPLATE REVISION DATE: 02/2013
SHEET ISSUE DATE: 04/24/19
FILE PATH: BIM 360://Granada Hills Pool Renovation/A_Granada-Hills_2017.rvt

REVISION DATES (DESIGN STAGE ONLY)

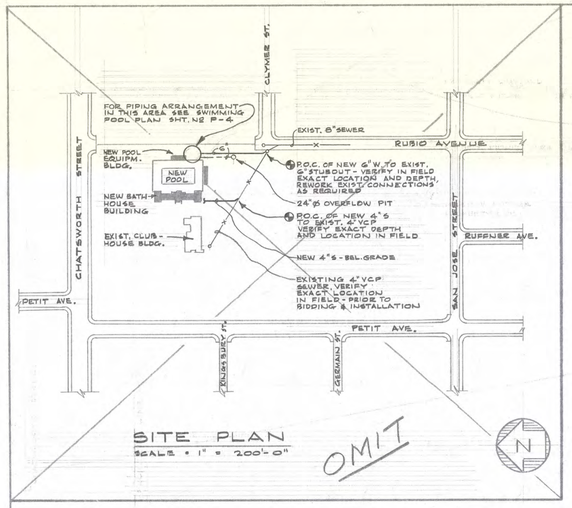

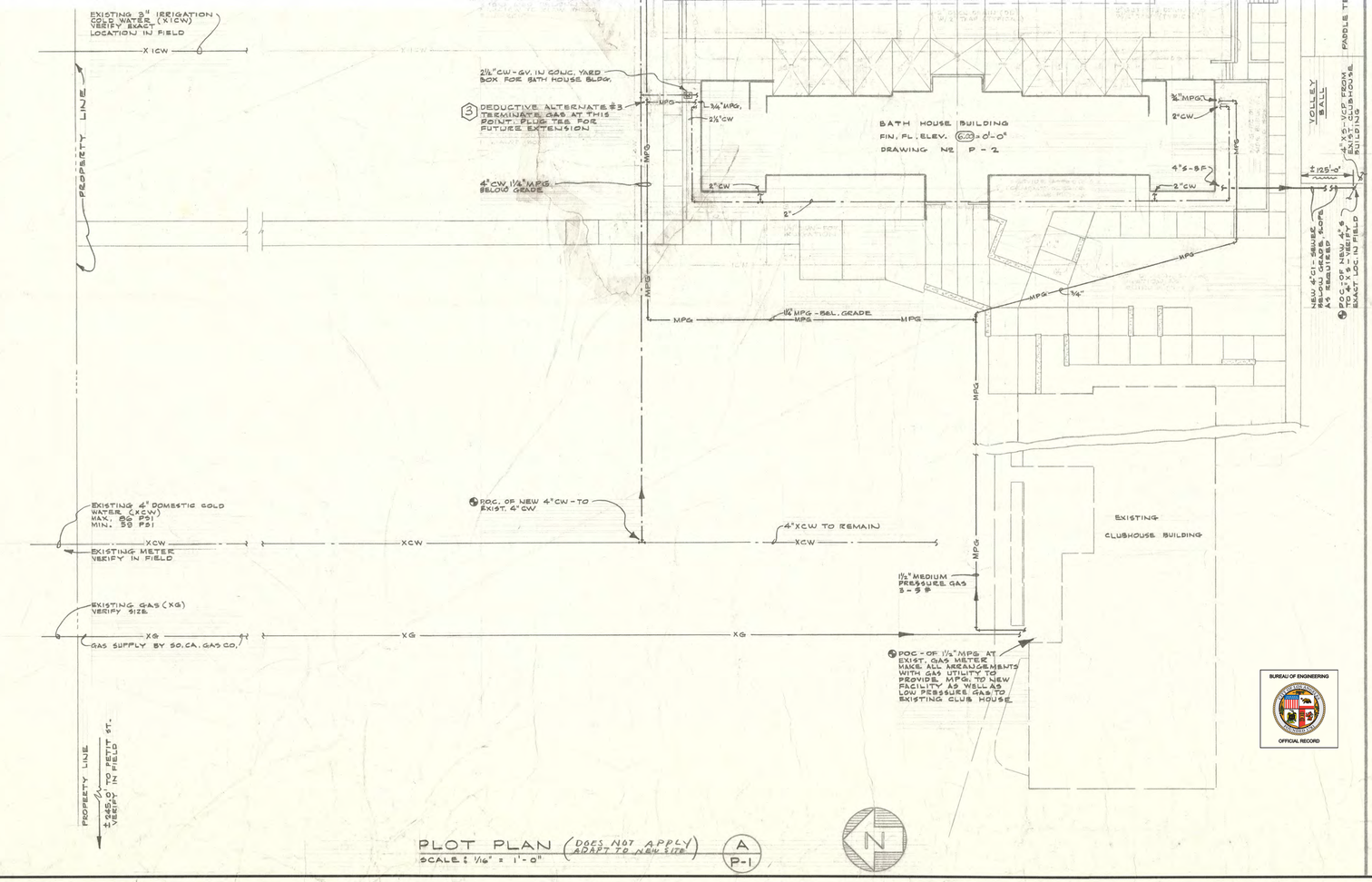

BUREAU OF ENGINEERING
OFFICIAL RECORD

LEGEND

SYMBOL	ABBREV.	DESCRIPTION
X	X	EXISTING
S or W	S or W	SOIL OR WASTE
D	D	DRAIN
V.C.P.	V.C.P.	VITRIFIED CLAY PIPE
V	V	VENT
C.W.	C.W.	COLD WATER
H.W.	H.W.	HOT WATER
T.W.	T.W.	TEMPERED WATER
G	G	FUEL GAS
MPG	M.P.G.	MEDIUM PRESSURE GAS
CHK.V	CHK.V	CHECK VALVE
G.V.	G.V.	GATE VALVE
P.C.	P.C.	PLUG COCK
B.F.V.	B.F.V.	BUTTERFLY VALVE
PRV	PRV.	PRESSURE REGULATOR VALVE
C.O.	C.O.	CLEAN OUT
WCO	W.C.O.	WALL CLEAN OUT
FCO	F.C.O.	FLOOR CLEAN OUT
COYB	C.O.Y.B.	CLEAN OUT IN YARD BOX
V.T.R.	V.T.R.	VENT THRU ROOF
I.E.	I.E.	INVERT ELEVATION
W/	W/	WITH
W.H.	W.H.	WATER HEATER
B.F.	B.F.	BELOW FLOOR
O.H.	O.H.	OVER HEAD (NEAR OR ABOVE CEILG.)
P.O.C.	P.O.C.	POINT OF CONNECTION
C.I.	C.I.	CAST IRON
H.B.	H.B.	HOSE BIBB
RHB	R.H.B.	RECESSED HOSE BIBB
P.S.	P.S.	POOL SUPPLY
G.D.	G.D.	GUTTER DRAIN
P.D.	P.D.	POOL DRAIN
ICW	ICW	IRRIGATION COLD WATER
		FLOW IN DIRECTION OF ARROW
		SLOPE IN DIRECTION OF ARROW IN %

PLUMBING FIXTURE CONNECTION SCHEDULE

SYMBOL	ABBREV.	FIXTURE	W.	TRAP	VENT	CW	HW	REMARKS
	W.C.	WATER CLOSET	4	—	2	1	—	WALL HUNG W/ FLUSH VALVE
	U	URINAL	2	—	1½	¾	—	WALL HUNG W/ FLUSH VALVE
	L-1	LAVATORY	2	1¼/1½	1½	½	½	WALL HUNG
	L-2	LAVATORY	2	1¼/1½	1½	—	—	WALL HUNG W/ TEMP. HW.
	D.F.	DRINKING FOUNTAIN	2	1¼/1½	1½	½	—	MOUNT + 30"
	SHR-1	SHOWER	2	2	1½	½	½	
	SHR-2	SHOWER	2	2	1½	—	—	MULTI SHOWER TEMP. HW.
	SHR-3	SHOWER	2	2	1½	¾	—	CW - ONLY W/ MANUAL SHUT-OFF
	F.D.	FLOOR DRAIN	2	2	1½	—	—	2" V-SP.
	F.S.	FLOOR SINK	2	2	1½	—	—	2" V-SP.
	G.D.	GUTTER DRAIN	2	2	—	—	—	8" DIA. GRATE (3" TERMINAL VENT)
	D.D.	DECK DRAIN	2	2	—	—	—	8" DIA. GRATE (3" TERMINAL VENT)
	S	SINK	2	2	1½	½	½	
	S.S.	SERVICE SINK	3	3	2	½	½	3" TRAP STANDARD

GENERAL NOTES

1. THE PLUMBING CONTRACTOR SHALL VERIFY THE EXACT DEPTH, LOCATION AND SIZE OF ALL EXISTING LINES, LATERALS AND WYES BEFORE STARTING AND SHALL NOTIFY THE ARCHITECT IF SAID CONNECTIONS ARE NOT IN THE LOCATION SHOWN OR ARE NOT OF SUFFICIENT SIZE, OR DEPTH TO MAKE THE CONNECTION IN COMPLIANCE WITH PLANS & SPECIFICATIONS.
2. THE PLUMBING CONTRACTOR IS TO FURNISH ALL MATERIALS FOR AND MAKE ALL CONNECTION TO ALL EQUIPMENT NOT IN PLUMBING SECTION, TO MAKE A COMPLETE WORKABLE INSTALLATION.
3. INSTALL ALL PLUMBING TO AVOID INTERFERENCE WITH MECHANICAL, ELECTRICAL AND OTHER EQUIPMENT, WHERE REQUIRED OFFSET PIPING AND/OR VENTS THRU ROOF TO CLEAR BEAMS ETC.
4. FOR EXACT LOCATION OF FIXTURES AND EQUIPMENT SEE ARCHITECT. DRAWINGS.
5. (3) INDICATES INFORMATION RELATIVE TO DEDUCTIVE ALTERNATE NUMBER 3

FOR REFERENCE ONLY

000669

308 A 5

"AS-BUILT" DRAWING **FOR REFERENCE ONLY** (NOT TO SCALE)

GENERAL NOTES: 1. NOT TO SCALE 2. DIMENSIONS TO BE VERIFIED IN FIELD

REVISIONS
BID SET - 1/29/13

ENGINEER OF WORK: DWG NO. P1-P2-P3-P4 - LOS ANGELES, CALIFORNIA
P.O. BOX 337 • CORONA DEL MAR, CALIFORNIA 714-459-2255
314-554-6161
DANIEL TAYLOR REGISTERED Professional Engineer
JOB NO. 8616
RE. 19322

BUTTRESS, McCLELLAN & MARKWITH INC.
DENVER MARKWITH JR. ARCHITECT
RAYMOND L. SMULLIN ENGINEER
LOS ANGELES - 6456 YORK BOULEVARD (213) 254-4351
SAN BERNARDINO - CALIFORNIA HOTEL (714) 884-1831

SWIMMING POOL & BATHHOUSE for GRANADA HILLS RECREATION CENTER
DEPARTMENT OF RECREATION & PARKS
LOS ANGELES, CALIFORNIA

TITLE: PLUMBING
PLOT PLAN, LEGEND AND GEN. NOTES

DATE PRINTED

DRAWN	DATE
SIGI	6-30-70
CHECK	DATE
ND	12/21/70
JOB	4-259
SHEET	P-1

BUREAU OF PUBLIC WORKS
DEPARTMENT OF PUBLIC WORKS
CITY OF LOS ANGELES
ENGINEERING
CITY OF LOS ANGELES

NO.	REVISION DESCRIPTION	DATE	BY

BUILDING NO. -
INDEX NO. RP-300118

GARY LEE MOORE, PE, ENV SP — CITY ENGINEER
ARCHITECTURAL DIVISION
ARCHITECT/ENGINEER: JOHN SPARANO LIC. NO.: C-26244
DESIGNED BY: SPARANO + MOONEY ARCHITECTURE
DRAWN BY: JORGE BELTRAN
CHECKED BY: LUDWING JUAREZ
APPROVED BY:

CITY ENGINEER'S SEAL — LICENSED ARCHITECT — JOHN P. SPARANO — No. C-26244 — EXP. 1-30-21 — STATE OF CALIFORNIA

VERTICAL CONTROL:
HORIZONTAL CONTROL:

SHEET TITLE: AS-BUILTS P-1 1970

PROJECT: GRANADA HILLS POOL AND BATHHOUSE REPLACEMENT PROJECT

ADDRESS: 16730 CHATSWORTH STREET GRANADA HILLS, CA 91344

BID SET
PROJECT ISSUE DATE: 06/22/21
CITY OF LOS ANGELES

WORK ORDER NO. #E170517
PLAN FILE NO.
DRAWING NO. A0.14
SHEET 0 OF SHEETS

PLOTTED:3/2/2020 9:30:31 PM

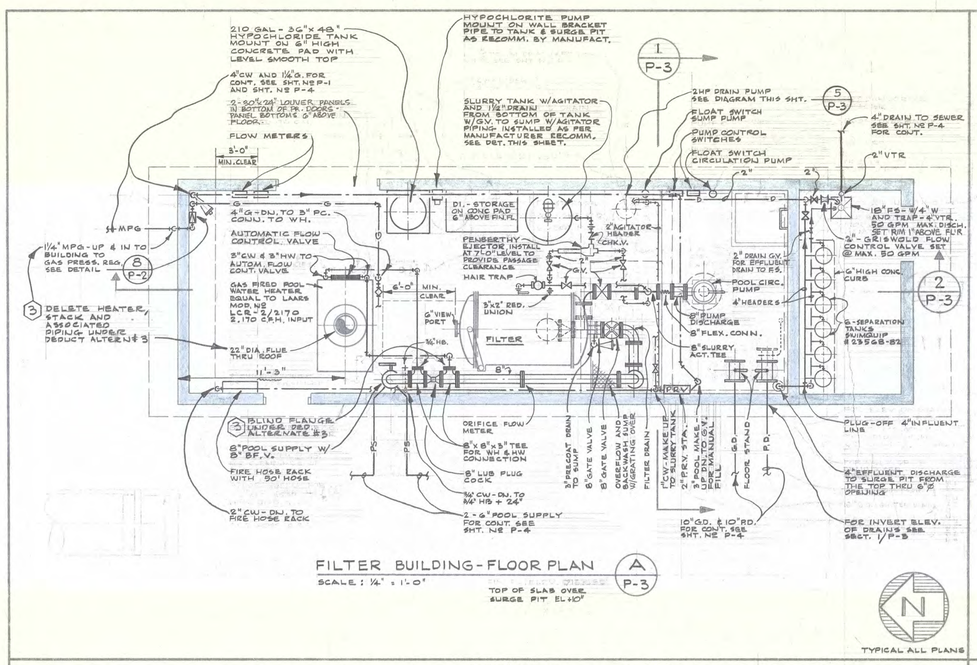

FILTER BUILDING - FLOOR PLAN

SCALE : ¼" = 1'-0"

A P-3

TOP OF SLAB OVER SURGE PIT EL. 410'

TYPICAL ALL PLANS

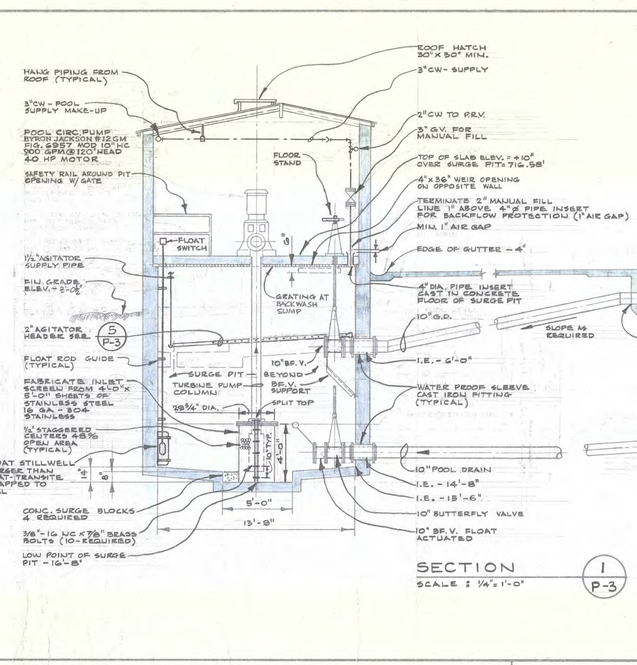

SECTION

SCALE : ¼" = 1'-0"

1 P-3

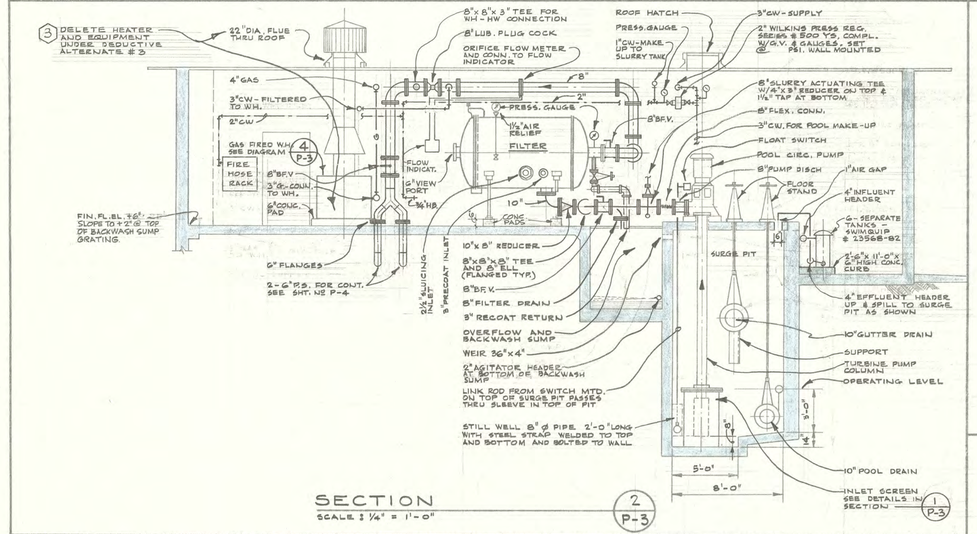

SECTION

SCALE : ¼" = 1'-0"

2 P-3

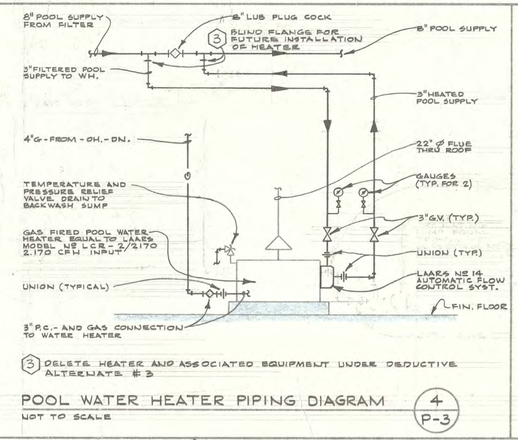

POOL WATER HEATER PIPING DIAGRAM

NOT TO SCALE

4 P-3

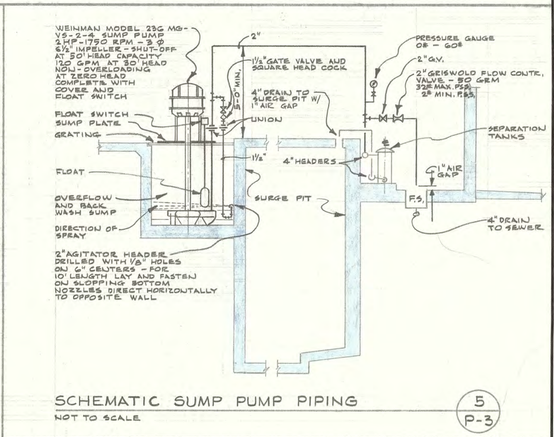

SCHEMATIC SUMP PUMP PIPING

NOT TO SCALE

5 P-3

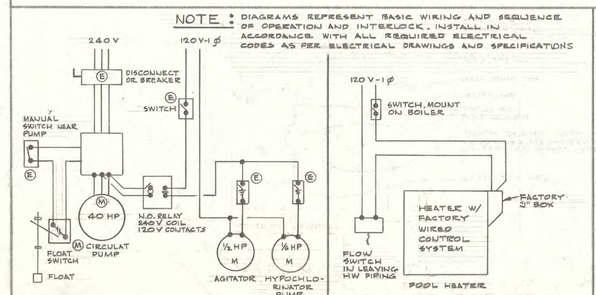

ELECTRICAL CONTROL SYSTEMS

ELECT. POOL HEATER CONTROL

3 DELETE UNDER DEDUCTIVE ALTERNATE #3

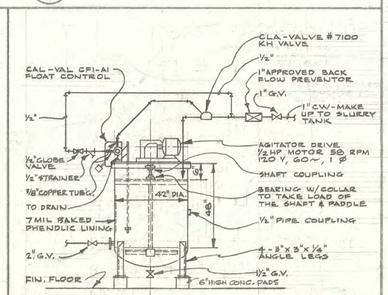

SLURRY TANK DETAILS

NOT TO SCALE

3 P-3

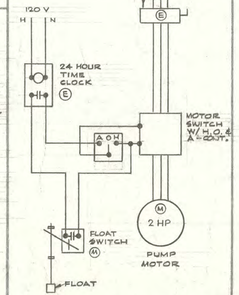

DRAIN PUMP CONTR.

FOR REFERENCE ONLY

000067

308 A 5

"AS-BUILT" DRAWING **FOR REFERENCE ONLY** (NOT TO SCALE)

GENERAL NOTES: 1. NOT TO SCALE 2. DIMENSIONS TO BE VERIFIED IN FIELD

REVISIONS
BLDG. DEPT - 1/4/73
BID SET - 1/29/73

NO.	REVISION DESCRIPTION	DATE	BY

BUILDING NO. -

INDEX NO. **RP-300118**

P.O. BOX 7006 PASADENA, CALIF. 91109 2 CHAMBERLAY ROAD, ALTADENA, CALIF. 91001 213-354-9163 714-479-0333

DANIEL, MAHLER & ASSOCIATES Consulting Engineers

JOB NO. 8616 ME-4922

BUTTRESS, MacLELLAN & MARKWITH INC. DONALD A. MARKWITH SR. ARCHITECT RAYMOND L. SMULLINS ENGINEER
LOS ANGELES - 6456 YORK BOULEVARD (213) 254-4351
SAN BERNARDINO - CALIFORNIA HOTEL (714) 884-1831

SWIMMING POOL & BATH HOUSE for GRANADA HILLS RECREATION CENTER
DEPARTMENT OF RECREATION & PARKS
LOS ANGELES, CALIFORNIA

LICENSED ARCHITECT R. P. SPARANO 23244 EXP. 1-30-21 STATE OF CALIFORNIA

TITLE: PLUMBING FILTER BUILDING PLAN & DETAILS

DATE PRINTED

DRAWN	DATE
SIGH	6-25-70
CHECK	DATE
ND	12/21/70
JOB	
4259	
SHEET	
P-3	

BUREAU OF ENGINEERING
CITY OF LOS ANGELES
DEPARTMENT OF PUBLIC WORKS
ENGINEERING

GARY LEE MOORE, PE, ENV SP
CITY ENGINEER

DATE: 03/03/20 | 03/03/20 | 03/03/20 | 03/03/20 | 03/03/20

ARCHITECT/ENGINEER: JOHN SPARANO LIC. NO.: C-26244
DESIGNED BY: SPARANO + MOONEY ARCHITECTURE
DRAWN BY: JORGE BELTRAN
CHECKED BY: LUDWING JUAREZ
APPROVED BY:

VERTICAL CONTROL:
HORIZONTAL CONTROL:

SHEET TITLE: AS-BUILTS P-3 1970

PROJECT: GRANADA HILLS POOL AND BATHHOUSE REPLACEMENT PROJECT

ADDRESS: 16730 CHATSWORTH STREET GRANADA HILLS, CA 91344

BID SET
PROJECT ISSUE DATE: 06/22/21

CITY OF LOS ANGELES

WORK ORDER NO. #E170517
PLAN FILE NO.
DRAWING NO. A0.15
SHEET 0 OF SHEETS

PLOTTED: 3/2/2020 9:30:33 PM

OFFICIAL RECORD

THE CITY OF LOS ANGELES OR ITS OFFICERS OR AGENTS SHALL NOT BE RESPONSIBLE FOR THE ACCURACY OR COMPLETENESS OF ELECTRONIC COPIES OF THIS PLAN SHEET.

FILE PATH: BIM 360://Granada Hills Pool Renovation/A_Granada-Hills_2017.rvt

TTLB TEMPLATE REVISION DATE: 02/2013
SHEET ISSUE DATE: 04/24/19

REVISION DATES (DESIGN STAGE ONLY)

THE CITY OF LOS ANGELES OR ITS OFFICERS OR AGENTS SHALL NOT BE RESPONSIBLE FOR THE ACCURACY OR COMPLETENESS OF ELECTRONIC COPIES OF THIS PLAN SHEET.

TTLB TEMPLATE REVISION DATE: 02/2013
SHEET ISSUE DATE: 04/24/19
FILE PATH: BIM 360://Granada Hills Pool Renovation/A_Granada-Hills_2017.rvt

REVISION DATES (DESIGN STAGE ONLY)

PROPERTY LINE AND POSSIBLE FUTURE ℄ OF RUBIO STREET

30'-0"

POSSIBLE FUTURE PROPERTY LINE

POOL EQUIPMENT BUILDING

SEE SHEET & P-3 FOR ADDITIONAL INFORMATION

4" COVB.

I.E. -5'-5"

4" DS - BELOW GRADE SLOPE @ 1%

2" DS.

4" CW & 1½" HPG FOR EQUIP. SEE PLOT PLAN SHT. NE P-1

MPS-1

2" GD - GUTTER DRAIN W/ 2" TRAP (TYP.)

2-6" PD. SEL. POOL DECK 24" COVER

6'-0" X 6'-0" KNOCK-OUT PANEL IN POOL DECK FOR ACCESS TO POOL SUPPLY MAINS (TYPICAL 2 PLACES)

CI. ELLS AND REDUCERS @ ALL CORNERS (TYPICAL

6" X 5" REDUCER CI. (TYP.)

5" POOL SUPPLY

4" DS.

SLOPE @ 1%

GUTTER

5" X 4" REDUCER CAST IRON (TYP.)

2" GD - GUTTER DRAIN W/ 2" TRAP (TYPICAL)

I.E. - 2'-6"

SLOPE @ 1%

2" DECK DRAIN (DD) TYPICAL W/ 2" TRAP

2" DRAIN - FROM BOYS OPEN DRESSING ROOM FOR CONT. SEE A P-2

4" COVB

4" RUNNING TRAP WITH 4" V. BELOW GRADE AND THRU ROOF IN POOL EQUIPMENT BUILDING

4" DRAIN CI.

4" COVB

4" V. BEL. GD

4" VTR

6" SOLID PIPE

6" VCP

8" PERFORATED DRAINAGE PIPE FOR DETAIL SEE 5 P-4 SLOPE @ 1%

± 120'-0" DRAINAGE PIPE

RAIN COLLECTOR DU ROOF W/ ¾" DRAIN TO RAINWATER VALVE

24" X 24" COVERED PRECAST CONC. BOX FOR 6" TYP RAINWATER VALVE SEE DETAIL 4 P-4

I.E. - 5'-8" (±)

4" DS - BELOW GRADE SLOPE @ 1% (TYP.)

2" GD - GUTTER DRAIN W/ 2" TRAP

I.E. - 3'-7"

4" COVB

EXISTING CONC. WALK TO REMAIN

EXISTING CONC. WALK

EXIST. MANHOLE 6'-8" DEEP

CLYMER ST.

EXIST. 8" SEWER @ .44 % SLOPE

± 57'-0" (VERIFY)

RUBIO STREET

EXIST. CABLE FENCE

EXIST. C.O. - REPLACE AT POC W/ 4" COVB

POC OF NEW 6" DRAIN TO EXIST. STUB-OUT AND REWORK NEW COVB AND EXISTING PIPE AS REQUIRED

10'-0" MIN. SOLID PIPE

VCP

SLOPE @ 1%

± 80'-0"

± 250'-0"

24" DIA X 48" DEEP OVER FLOW AND SEEPAGE PIT FILLED WITH ROCKS PROVIDE HEAVY CI. PERFORATED COVER

EXIST. 4" SOIL FROM MAIN BUILDING SEE 4HT, NE P-1 FOR CONT.

TYPICAL KNOCK-OUT PANEL

6" CI. ELLES DOWN TO HIGH POINT OF 5" PS, TYP. 2 PLACES SEE 2 P-4

2" BRASS

1¼" BRASS

2½" BRASS

CI. ELLES AND REDUCERS @ ALL CORNERS (TYP.)

6" X 5" REDUCER CI. (TYP.)

5" POOL SUPPLY

4" DS

MAIN POOL DRAIN W/ 18"X18" GRATE, = 12'-1" TOP TYP.

8" POOL DRAIN

9'-0"

8'-0"

5"

4"

2" BRASS

4" X 2" REDUCER (TYPICAL)

1¼" BRASS

REDUCER AND SWOPE

5" X 4" REDUCER C.I. (TYPICAL)

2" GD - GUTTER DRAIN W/ 2" TRAP (TYPICAL

PIPE DRAINAGE, LOW POINT - 2"

POOL SUPPLY (TYP.) SEE TYP. SECTION THIS SHEET

1 P-4

2" DECK DRAIN (DD) TYPICAL W/ 2" TRAP TOP OF GRATE ELEV. - 3"

2" DECK DRAIN (DD) TYPICAL W/ 2" TRAP

4" FCO

I.E. -1'-9"

3" V

FIN. FL'R. EL 0'-0"

3" TERMINAL VENTS - UP IN FURRED SPACE SEE SHT. NE. P-2

2" DRAIN - FROM GIRLS OPEN DRESSING ROOM FOR CONT. SEE A P-2

I.E. - 2'-0"

4" COVB

SLOPE @ 1%

SWIMMING POOL PLAN

SCALE : 1/8 = 1'-0"

N

3'-0" ± CONSTANT

EDGE OF POOL ℄ POOL WALL

1½" POOL INLET

BAKER SERIES 183-D DOUBLE BRONZE STRAP

MAIN POOL SUPPLY PIPING FOR SIZES SEE FLOOR PLAN

PLAN VIEW

POOL EDGE

POOL GUTTER

WATER LINE

POOL WALL

PROVIDE WATER TIGHT CAULKED SLEEVE

GROUT WATER TIGHT ALL AROUND

ADJUSTABLE BRASS WALL INLET - 1½" KAT SWIMQUIP # 8426

BOTTOM OF POOL VARIES

VARIES

6"±

1½" BRASS PIPE (TYPICAL)

MAIN POOL SUPPLY, SEE PLAN FOR SIZES

PS

3'-0"

12"±

SECTION "A"-"A"

POOL SUPPLY INLET RECESS

NOT TO SCALE

1 P-4

GROUND SURFACE

"B"

"A"

BACK FILL

UNSATURATED BUILDING PAPER

6" PERFORATED PIPE

1" X 6" REDWOOD GRADE BOARD

GRAVEL - ROCK FILL

12" (8" VARIABLE TO 18" MAX.) LEADING EDGE

3'-0"±

SECTION "A"-"A"

SECTION "B"-"B"

DRAINAGE TILE DETAILS

NOT TO SCALE

5 P-4

MANUAL RESET

4" OVERFLOW TO DRAINAGE TILE

6" TM. RAIN WATER VALVE

6" DS - FROM DECK DRAINS

PRECAST CONC. VALVE BOX

24"

18"

FIN. GRADE

¾" INLET PIPE FROM RAIN COLLECTOR

24" MIN.

6" DRAIN TO SEWER

12"

3"

RAINWATER VALVE DETAILS

NOT TO SCALE

4 P-4

10" Ø GUTTER DRAIN TO SUEGE PIT IN FILTER BUILDING

10" X 8" DOUBLE WYE BRANCH INBEDED IN CONC.

8"-⅛ BEND C.I.

POOLGUTTER & DRAIN

POOL WALL

GROUT-IN & AROUND FITTINGS

PROVIDE PLUG

PLAN VIEW

10" G.D. - C.I. SLOPE ¼" PER FT.

POOL EDGE

POOL GUTTER

WATER LINE

GROUT-IN 8"-⅛ BEND

POOL WALL

SECTION

GUTTER DRAIN DETAILS

NOT TO SCALE

3 P-4

6'-2"

3'-0"

EDGE OF POOL

24"±

WATER LINE

POOL GUTTER

6" POOL SUPPLY MAIN UNDER KNOCK OUT PANEL

1½" POOL SUPPLY SEE 1 P-4

2½" POOL SUPPLY BRASS MAIN TO POOL SUPPLY INLETS AT DEEP END OF POOL FOR OTHER SIZES SEE POOL PLAN

PS

12"

12"

BOTTOM OF POOL

POOL SUPPLY PIPE SECTION

NOT TO SCALE

2 P-4

"AS-BUILT" DRAWING **FOR REFERENCE ONLY** (NOT TO SCALE)

GENERAL NOTES: 1. NOT TO SCALE 2. DIMENSIONS TO BE VERIFIED IN FIELD

FOR REFERENCE ONLY

0666 308 A 5

REVISIONS

BID SET-1/29/73

JOB NO 8616 ME 4922

BUREAU OF ENGINEERING

OFFICIAL RECORD

BUTTRESS, McCLELLAN & MARKWITH INC.
DENVER MARKWITH JR. ARCHITECT
RAYMOND L. SMULLINS ENGINEER
6456 YORK BOULEVARD
LOS ANGELES 42 CLINTON 4-4351

SWIMMING POOL & BATH HOUSE for GRANADA HILLS RECREATION CENTER

DEPARTMENT OF RECREATION & PARKS
LOS ANGELES, CALIFORNIA

TITLE: PLUMBING SWIMMING POOL PLAN AND DETAILS

DATE PRINTED

DRAWN	DATE
SIGI	6-26-70
CHECK	DATE
N.D.	12/21/70
JOB	
4259	
SHEET	
P-4	

BUREAU OF ENGINEERING
CITY OF LOS ANGELES
ENGINEERING

NO.	REVISION DESCRIPTION	DATE	BY

BUILDING NO. -

INDEX NO. RP-300118

DEPARTMENT OF PUBLIC WORKS
CITY OF LOS ANGELES

GARY LEE MOORE, PE, ENV SP — CITY ENGINEER

	DATE:
ARCHITECTURAL DIVISION	
ARCHITECT/ENGINEER: JOHN SPARANO LIC. NO.: C-26244	03/03/20
DESIGNED BY: SPARANO + MOONEY ARCHITECTURE	03/03/20
DRAWN BY: JORGE BELTRAN	03/03/20
CHECKED BY: LUDWING JUAREZ	03/03/20
APPROVED BY:	

SHEET TITLE: AS-BUILTS P-4 1970

PROJECT: GRANADA HILLS POOL AND BATHHOUSE REPLACEMENT PROJECT

ADDRESS: 16730 CHATSWORTH STREET GRANADA HILLS, CA 91344

VERTICAL CONTROL:
HORIZONTAL CONTROL:

BID SET
PROJECT ISSUE DATE: 06/22/21

WORK ORDER NO. #E170517

PLAN FILE NO.

DRAWING NO. A0.16

SHEET 0 OF SHEETS

PLOTTED:3/2/2020 9:30:36 PM

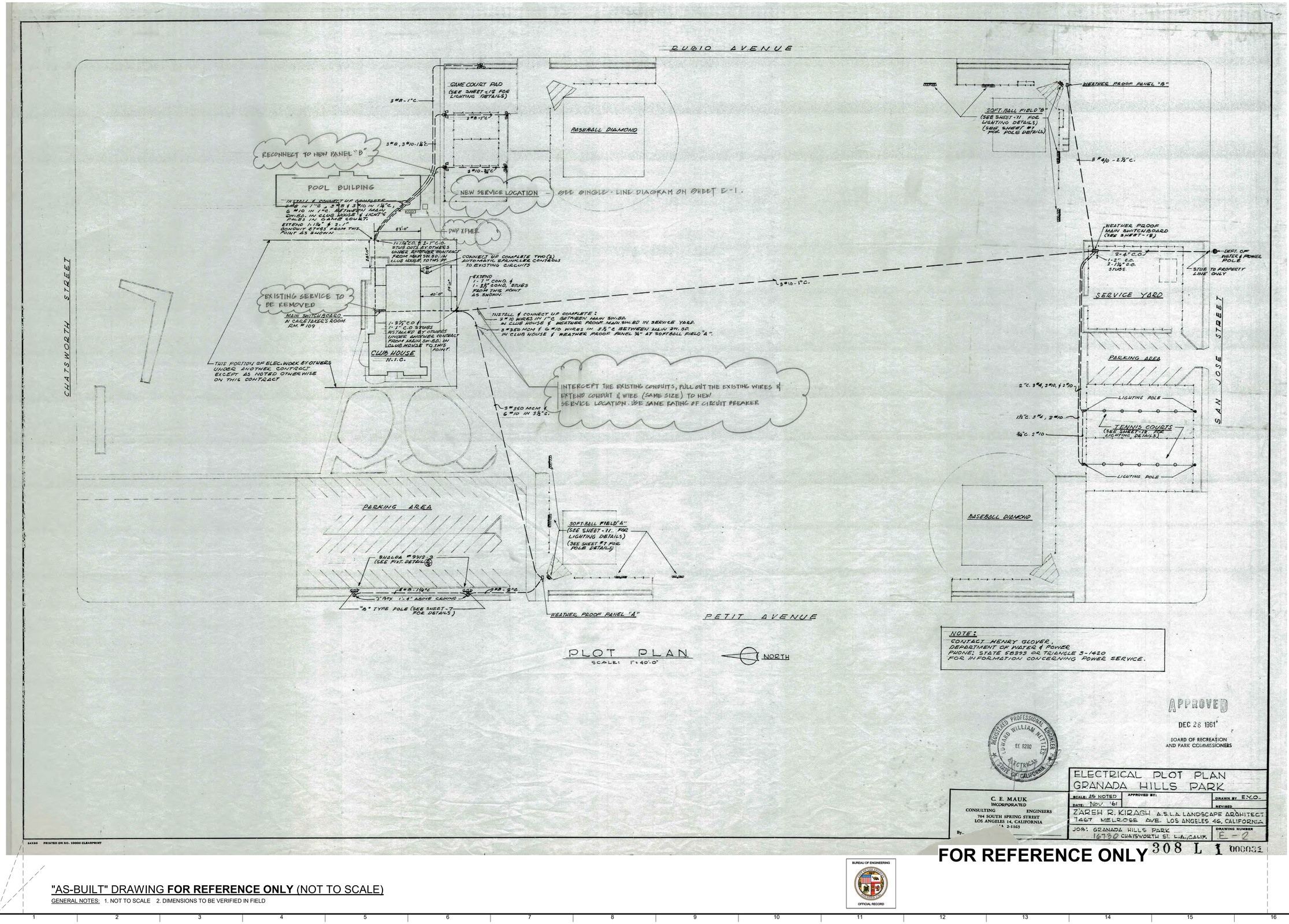

PLOT PLAN
SCALE: 1"=40'-0"

NORTH

NOTE:
CONTACT HENRY GLOVER, DEPARTMENT OF WATER & POWER PHONE: STATE 58393 OR TRIANGLE 3-1620 FOR INFORMATION CONCERNING POWER SERVICE.

APPROVED
DEC 28 1961
BOARD OF RECREATION AND PARK COMMISSIONERS

REGISTERED PROFESSIONAL ENGINEER — LIVING WILLIAM NETTLES — EE 8280 — ELECTRICAL — STATE OF CALIFORNIA

C. E. MAUK
INCORPORATED
CONSULTING ENGINEERS
704 SOUTH SPRING STREET
LOS ANGELES 14, CALIFORNIA
TRINITY 2-1165
By

ELECTRICAL PLOT PLAN
GRANADA HILLS PARK

SCALE: AS NOTED	APPROVED BY:	DRAWN BY E.Y.O.	
DATE: NOV '61		REVISED	
ZAREH R. KIRAGH A.S.L.A. LANDSCAPE ARCHITECT 7467 MELROSE AVE. LOS ANGELES 46, CALIFORNIA			
JOB: GRANADA HILLS PARK 16730 CHATSWORTH ST. L.A., CALIF.		DRAWING NUMBER E-2	

64X86 PRINTED ON NO. 1000H CLEARPRINT

BUREAU OF ENGINEERING — OFFICIAL RECORD

FOR REFERENCE ONLY 308 L 1 000051

"AS-BUILT" DRAWING **FOR REFERENCE ONLY** (NOT TO SCALE)

GENERAL NOTES: 1. NOT TO SCALE 2. DIMENSIONS TO BE VERIFIED IN FIELD

THE CITY OF LOS ANGELES OR ITS OFFICERS OR AGENTS SHALL NOT BE RESPONSIBLE FOR THE ACCURACY OR COMPLETENESS OF ELECTRONIC COPIES OF THIS PLAN SHEET.

TTLB TEMPLATE REVISION DATE: 02/2013
SHEET ISSUE DATE: 04/24/19
FILE PATH: BIM 360://Granada Hills Pool Renovation/A_Granada-Hills_2017.rvt

REVISION DATES (DESIGN STAGE ONLY)

BUREAU OF ENGINEERING
ENGINEERING
CITY OF LOS ANGELES

NO.	REVISION DESCRIPTION	DATE	BY

BUILDING NO. -

INDEX NO. RP-300118

DEPARTMENT OF PUBLIC WORKS
CITY OF LOS ANGELES

BID SET
PROJECT ISSUE DATE: 06/22/21

VERTICAL CONTROL:
HORIZONTAL CONTROL:

SHEET TITLE: AS-BUILTS E-2 1961

PROJECT: GRANADA HILLS POOL AND BATHHOUSE REPLACEMENT PROJECT

ADDRESS: 16730 CHATSWORTH STREET GRANADA HILLS, CA 91344

	CITY ENGINEER	DATE:
GARY LEE MOORE, PE, ENV SP		
LIC. NO. C-26244	03/03/20	
ARCHITECTURAL DIVISION	03/03/20	
ARCHITECT/ENGINEER: JOHN SPARANO	03/03/20	
DESIGNED BY: SPARANO + MOONEY ARCHITECTURE	03/03/20	
DRAWN BY: JORGE BELTRAN		
CHECKED BY: LUDWING JUAREZ		
APPROVED BY:		

WORK ORDER NO. #E170517
PLAN FILE NO.
DRAWING NO. A0.17
SHEET 0 OF SHEETS

PLOTTED:3/2/2020 9:30:39 PM

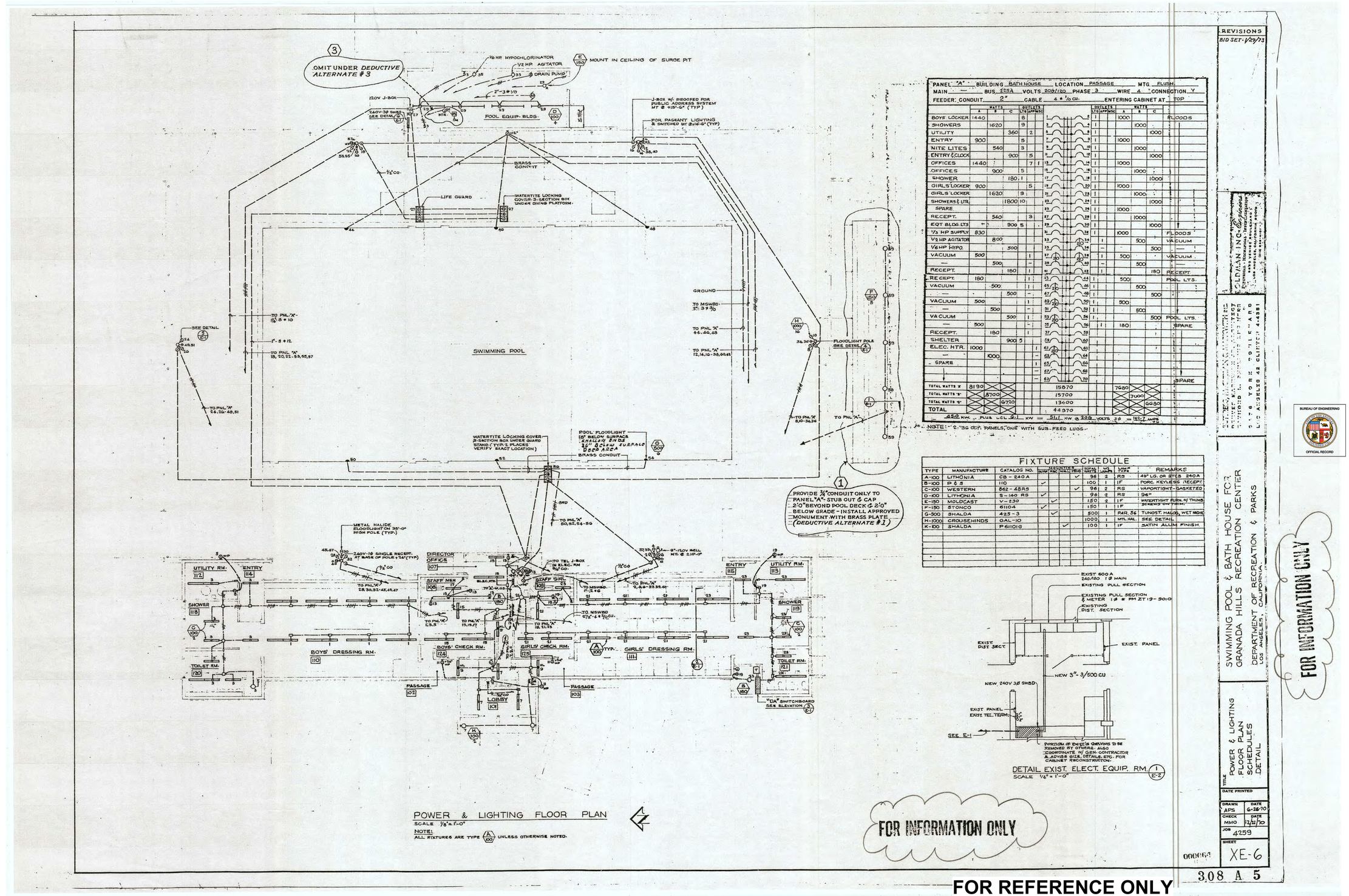

POWER & LIGHTING FLOOR PLAN
SCALE 1/8"=1'-0"
NOTE: ALL FIXTURES ARE TYPE (A/100) UNLESS OTHERWISE NOTED.

PANEL "A" BUILDING BATH HOUSE LOCATION PASSAGE MTG FLUSH
MAIN — BUS 225A VOLTS 208/120 PHASE 3 WIRE 4 CONNECTION Y
FEEDER: CONDUIT 2" CABLE 4 #1/0 CU. ENTERING CABINET AT TOP

	WATTS A	WATTS B	WATTS C	OUTLETS LTG	OUTLETS APPL	MISC		OUTLETS LTG	OUTLETS APPL	MISC	WATTS A	WATTS B	WATTS C	
BOYS' LOCKER	1440			8			1					1000		FLOODS
SHOWERS		1620		9			3						1000	
UTILITY			360	2			5						1000	
ENTRY	900			5			7				1000			
NITE LITES		540		3			9						1000	
ENTRY & CLOCK			900		5		11						1000	
OFFICES	1440				7	1	13				1000			
OFFICES		900			5		15					1000		
SHOWER			180	1			17						1000	
GIRLS' LOCKER	900				5		19				1000			
GIRLS' LOCKER		1620			9		21					1000		
SHOWERS & UTIL			1800	10			23						1000	
SPARE							25				1000			
RECEPT.		540				3	27					1000		
EQT BLDG LTS			300	5			29						1000	
½ HP SUPPLY	830						31				1000			FLOODS
½ HP AGITATOR		800					33					500		VACUUM
½ HP HYPO.			300				35						500	—
VACUUM	500					1	37					500		VACUUM
—		500				1	39						500	—
RECEPT.			180			1	41						180	RECEPT.
RECEPT.	180					1	43					500		POOL LTS.
VACUUM		500				1	45						500	
—			500			1	47						500	
VACUUM	500					1	49				500			
—		500				1	51						500	
VACUUM			500			1	53						500	POOL LTS.
—	500					1	55					180		SPARE
RECEPT.		180				1	57							SPARE
SHELTER			900	5			59							
ELEC. HTR.	1000					1	61							
—		1000				1	63							
SPARE						1	65							
						—	67							SPARE
						—	69							SPARE
TOTAL WATTS "A"	8190										7980			
TOTAL WATTS "B"		8700										7400		
TOTAL WATTS "C"			6720										6450	
TOTAL														

15870 15700 13400 44970

.450 KW. PLUS LCL @ 1 KV = 511 KW @ 208 VOLTS 3Ø = 141.7 AMPS

NOTE: 2-36 CCT. PANELS, ONE WITH SUB-FEED LUGS.

FIXTURE SCHEDULE

TYPE	MANUFACTURE	CATALOG NO.	NOVELTIES SURF	REC	WALL	PEND	TOTAL WATTS	NO. LAMPS	LAMP TYPE	REMARKS
A-100	LITHONIA	CB - 240 A				✓	96	2	RS	48" LG. OR STCB 240A
B-100	P & S	110	✓				100	1	IF	PORC. KEYLESS RECEPT.
C-100	WESTERN	862 - 48RS				✓	96	2	RS	VAPORTIGHT-GASKETED
D-100	LITHONIA	S - 140 RS	✓				96	2	RS	96"
E-150	MOLDCAST	V - 230	✓				150	2	IF	WATERTIGHT, TURN W/ THUMB SCREWS, 24"x24"x24" THICK
F-150	STONCO	61104		✓			150	1	IF	
G-500	SHALDA	425 - 3		✓			500	1	PAR 56	TUNGST. HALOG., WET NICHE
H-1000	CROUSEHINDS	GAL - 10					1000	1	MTL. HAL.	SEE DETAIL
K-100	SHALDA	P 61101G				✓	100	1	IF	SATIN ALUM FINISH

DETAIL EXIST. ELECT. EQUIP. RM. (1/E-2)
SCALE 1/4"=1'-0"

FOR INFORMATION ONLY

FOR INFORMATION ONLY

FOR REFERENCE ONLY

"AS-BUILT" DRAWING **FOR REFERENCE ONLY** (NOT TO SCALE)

GENERAL NOTES: 1. NOT TO SCALE 2. DIMENSIONS TO BE VERIFIED IN FIELD

REVISIONS
BID SET - 1/29/13

SWIMMING POOL & BATH HOUSE FOR GRANADA HILLS RECREATION CENTER
DEPARTMENT OF RECREATION & PARKS
LOS ANGELES, CALIFORNIA

POWER & LIGHTING
FLOOR PLAN
SCHEDULES
DETAIL

DATE PRINTED

DRAWN	DATE
APS	6-26-10
CHECK	DATE
MMO	12/1/10
JOB	
4259	
SHEET	
XE-6	

000063

3,08 A 5

BUREAU OF ENGINEERING
OFFICIAL RECORD

BUREAU OF ENGINEERING
ENGINEERING
CITY OF LOS ANGELES

NO.	REVISION DESCRIPTION	DATE	BY

BUILDING NO. -
INDEX NO. RP-300118

LICENSED ARCHITECT GARY L. P. SPARANO C-26244 EXP. 1-30-21 STATE OF CALIFORNIA

DEPARTMENT OF PUBLIC WORKS
BUREAU OF ENGINEERING
CITY OF LOS ANGELES

GARY LEE MOORE, PE, ENV SP — CITY ENGINEER — DATE: 03/03/20
VERTICAL CONTROL: — 03/03/20
HORIZONTAL CONTROL: — 03/03/20
ARCHITECTURAL DIVISION — 03/03/20
ARCHITECT/ENGINEER: JOHN SPARANO LIC. NO.: C-26244
DESIGNED BY: SPARANO + MOONEY ARCHITECTURE
DRAWN BY: JORGE BELTRAN
CHECKED BY: LUDWING JUAREZ
APPROVED BY:

SHEET TITLE: AS-BUILTS XE-6 1970

PROJECT: GRANADA HILLS POOL AND BATHHOUSE REPLACEMENT PROJECT
ADDRESS: 16730 CHATSWORTH STREET GRANADA HILLS, CA 91344

BID SET
PROJECT ISSUE DATE: 06/22/21

WORK ORDER NO. #E170517
PLAN FILE NO.
DRAWING NO. A0.18
SHEET 0 OF SHEETS

THE CITY OF LOS ANGELES OR ITS OFFICERS OR AGENTS SHALL NOT BE RESPONSIBLE FOR THE ACCURACY OR COMPLETENESS OF ELECTRONIC COPIES OF THIS PLAN SHEET.

TTLB TEMPLATE REVISION DATE: 02/2013
SHEET ISSUE DATE: 04/24/19
FILE PATH: BIM 360://Granada Hills Pool Renovation/A_Granada-Hills_2017.rvt

REVISION DATES (DESIGN STAGE ONLY)

PLOTTED:3/2/2020 9:30:47 PM

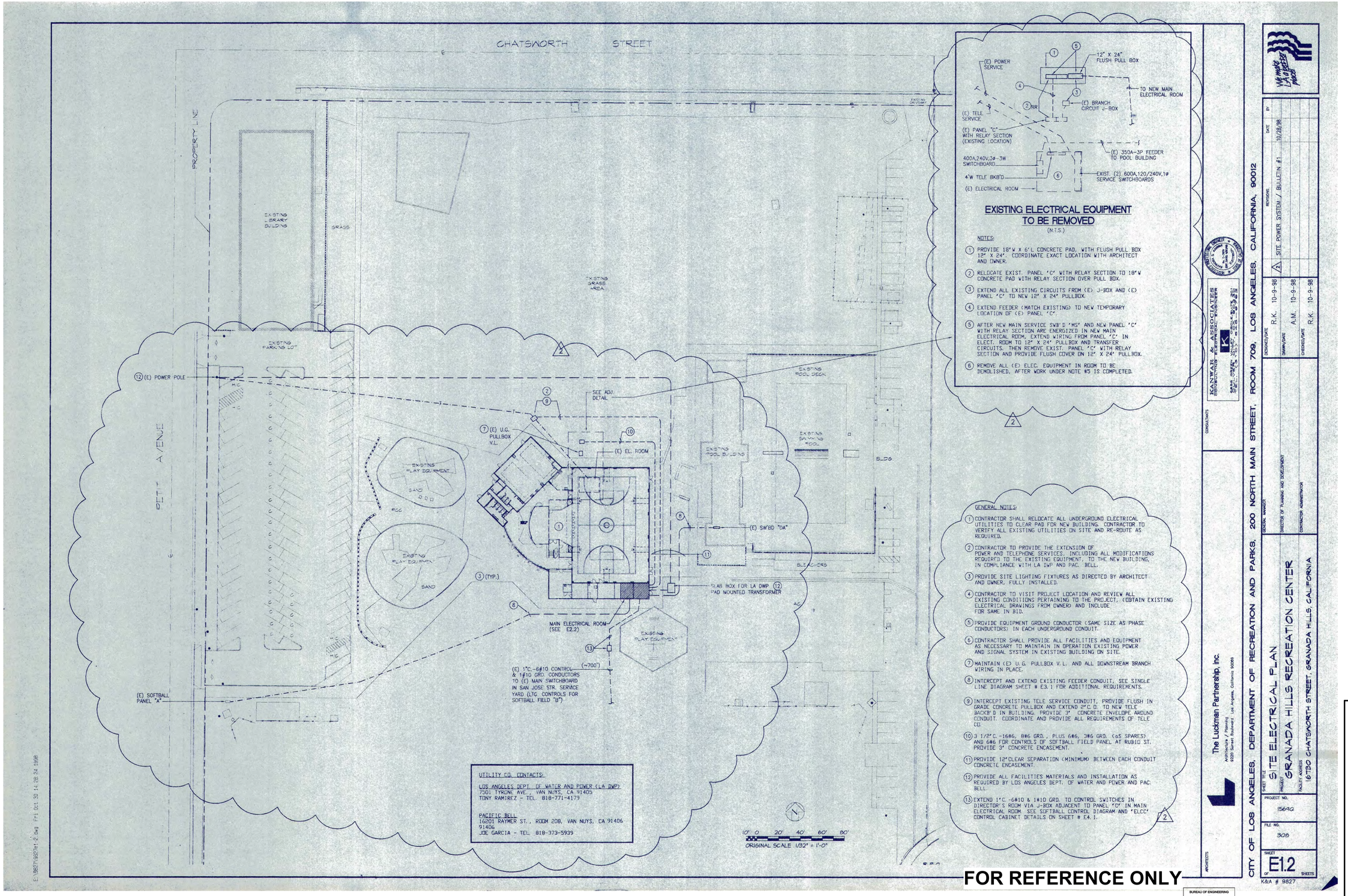

EXISTING ELECTRICAL EQUIPMENT TO BE REMOVED

(N.T.S.)

NOTES:

1. PROVIDE 18"W x 6'L CONCRETE PAD, WITH FLUSH PULL BOX 12" X 24". COORDINATE EXACT LOCATION WITH ARCHITECT AND OWNER.
2. RELOCATE EXIST. PANEL 'C' WITH RELAY SECTION TO 18"W CONCRETE PAD WITH RELAY SECTION OVER PULL BOX.
3. EXTEND ALL EXISTING CIRCUITS FROM (E) J-BOX AND (E) PANEL 'C' TO NEW 12" X 24" PULLBOX.
4. EXTEND FEEDER (MATCH EXISTING) TO NEW TEMPORARY LOCATION OF (E) PANEL 'C'.
5. AFTER NEW MAIN SERVICE SWB'D 'MS' AND NEW PANEL 'C' WITH RELAY SECTION ARE ENERGIZED IN NEW MAIN ELECTRICAL ROOM, EXTEND WIRING FROM PANEL 'C' IN ELECT. ROOM TO 12" X 24" PULLBOX AND TRANSFER CIRCUITS. THEN REMOVE EXIST. PANEL 'C' WITH RELAY SECTION AND PROVIDE FLUSH COVER ON 12" X 24" PULLBOX.
6. REMOVE ALL (E) ELEC. EQUIPMENT IN ROOM TO BE DEMOLISHED, AFTER WORK UNDER NOTE #5 IS COMPLETED.

GENERAL NOTES:

1. CONTRACTOR SHALL RELOCATE ALL UNDERGROUND ELECTRICAL UTILITIES TO CLEAR PAD FOR NEW BUILDING. CONTRACTOR TO VERIFY ALL EXISTING UTILITIES ON SITE AND RE-ROUTE AS REQUIRED.
2. CONTRACTOR TO PROVIDE THE EXTENSION OF POWER AND TELEPHONE SERVICES, INCLUDING ALL MODIFICATIONS REQUIRED TO THE EXISTING EQUIPMENT, TO THE NEW BUILDING, IN COMPLIANCE WITH LA DWP AND PAC. BELL.
3. PROVIDE SITE LIGHTING FIXTURES AS DIRECTED BY ARCHITECT AND OWNER, FULLY INSTALLED.
4. CONTRACTOR TO VISIT PROJECT LOCATION AND REVIEW ALL EXISTING CONDITIONS PERTAINING TO THE PROJECT, (OBTAIN EXISTING ELECTRICAL DRAWINGS FROM OWNER) AND INCLUDE FOR SAME IN BID.
5. PROVIDE EQUIPMENT GROUND CONDUCTOR (SAME SIZE AS PHASE CONDUCTORS) IN EACH UNDERGROUND CONDUIT.
6. CONTRACTOR SHALL PROVIDE ALL FACILITIES AND EQUIPMENT AS NECESSARY TO MAINTAIN IN OPERATION EXISTING POWER AND SIGNAL SYSTEM IN EXISTING BUILDING ON SITE.
7. MAINTAIN (E) U.G. PULLBOX V.L. AND ALL DOWNSTREAM BRANCH WIRING IN PLACE.
8. INTERCEPT AND EXTEND EXISTING FEEDER CONDUIT, SEE SINGLE LINE DIAGRAM SHEET # E3.1 FOR ADDITIONAL REQUIREMENTS.
9. INTERCEPT EXISTING TELE SERVICE CONDUIT, PROVIDE FLUSH IN GRADE CONCRETE PULLBOX AND EXTEND 2"C.O. TO NEW TELE BACKB'D IN BUILDING. PROVIDE 3' CONCRETE ENVELOPE AROUND CONDUIT. COORDINATE AND PROVIDE ALL REQUIREMENTS OF TELE CO.
10. 3 1/2"C.-1#6, 8#6 GRD., PLUS 6#6, 3#6 GRD. (6S SPARES) AND 6#6 FOR CONTROLS OF SOFTBALL FIELD PANEL AT RUBIO ST. PROVIDE 3' CONCRETE ENCASEMENT.
11. PROVIDE 12"CLEAR SEPARATION (MINIMUM) BETWEEN EACH CONDUIT CONCRETE ENCASEMENT.
12. PROVIDE ALL FACILITIES MATERIALS AND INSTALLATION AS REQUIRED BY LOS ANGELES DEPT. OF WATER AND POWER AND PAC. BELL.
13. EXTEND 1"C. -6#10 & 1#10 GRD. TO CONTROL SWITCHES IN DIRECTOR'S ROOM VIA J-BOX ADJACENT TO PANEL 'C' IN MAIN ELECTRICAL ROOM. SEE SOFTBALL CONTROL DIAGRAM AND "ELCC" CONTROL CABINET DETAILS ON SHEET # E4.1.

UTILITY CO. CONTACTS:

LOS ANGELES DEPT. OF WATER AND POWER (LA DWP)
7501 TYRONE AVE., VAN NUYS, CA 91405
TONY RAMIREZ - TEL. 818-771-4179

PACIFIC BELL
16201 RAYMER ST., ROOM 208, VAN NUYS, CA 91406
91406
JOE GARCIA - TEL. 818-373-5939

FOR REFERENCE ONLY

"AS-BUILT" DRAWING **FOR REFERENCE ONLY** (NOT TO SCALE)

GENERAL NOTES: 1. NOT TO SCALE 2. DIMENSIONS TO BE VERIFIED IN FIELD

BUREAU OF ENGINEERING
OFFICIAL RECORD

CONSULTANTS

KANTAR & ASSOCIATES
ELECTRICAL ENGINEERS
1901 AVENUE OF THE STARS, SUITE 1100
LOS ANGELES, CALIFORNIA 90067
(310) 553-2345

ARCHITECTS

The Luckman Partnership, Inc.
Architecture / Planning
9220 Sunset Boulevard, Los Angeles, California 90069

CITY OF LOS ANGELES, DEPARTMENT OF RECREATION AND PARKS, 200 NORTH MAIN STREET, ROOM 709, LOS ANGELES, CALIFORNIA, 90012

GENERAL MANAGER

DIRECTOR OF PLANNING AND DEVELOPMENT

CONTRACTOR ADMINISTRATOR

SHEET TITLE: SITE ELECTRICAL PLAN

PROJECT: GRANADA HILLS RECREATION CENTER

FACILITY ADDRESS: 16730 CHATSWORTH STREET, GRANADA HILLS, CALIFORNIA

PROJECT NO. 1569Q

FILE NO. 308

SHEET E1.2 OF SHEETS

K&A # 9827

NO.	REVISION DESCRIPTION	DATE	BY
2	SITE POWER SYSTEM / BULLETIN #1	10/28/98	

DESIGNED/DATE R.K. 10-9-98
DRAWN/DATE A.M. 10-9-98
CHECKED/DATE R.K. 10-9-98

BUILDING NO. -

INDEX NO. RP-300118

LICENSED ARCHITECT JOHN P. SPARANO No. C-28244 EXP. 1-30-21 STATE OF CALIFORNIA

BUREAU OF ENGINEERING
ENGINEERING
CITY OF LOS ANGELES

DEPARTMENT OF PUBLIC WORKS
CITY OF LOS ANGELES

GARY LEE MOORE, PE, ENV SP
CITY ENGINEER

DATE:	
03/03/20	
03/03/20	
03/03/20	
03/03/20	
03/03/20	

ARCHITECTURAL DIVISION
ARCHITECT/ENGINEER: JOHN SPARANO LIC. NO.: C-28244
DESIGNED BY: SPARANO + MOONEY ARCHITECTURE
DRAWN BY: JORGE BELTRAN
CHECKED BY: LUDWING JUAREZ
APPROVED BY:

VERTICAL CONTROL:
HORIZONTAL CONTROL:

SHEET TITLE: AS-BUILTS E1.2 1998

PROJECT: GRANADA HILLS POOL AND BATHHOUSE REPLACEMENT PROJECT

ADDRESS: 16730 CHATSWORTH STREET GRANADA HILLS, CA 91344

BID SET
PROJECT ISSUE DATE: 06/22/21

WORK ORDER NO. #E170517

PLAN FILE NO.

DRAWING NO. A0.19

SHEET 0 OF SHEETS

PLOTTED:3/2/2020 9:30:49 PM

THE CITY OF LOS ANGELES OR ITS OFFICERS OR AGENTS SHALL NOT BE RESPONSIBLE FOR THE ACCURACY OR COMPLETENESS OF ELECTRONIC COPIES OF THIS PLAN SHEET.

TTLB TEMPLATE REVISION DATE: 02/2013
SHEET ISSUE DATE: 04/30/19
FILE PATH: BIM 360://Granada Hills Pool Renovation/A_Granada-Hills_2017.rvt

REVISION DATES (DESIGN STAGE ONLY)

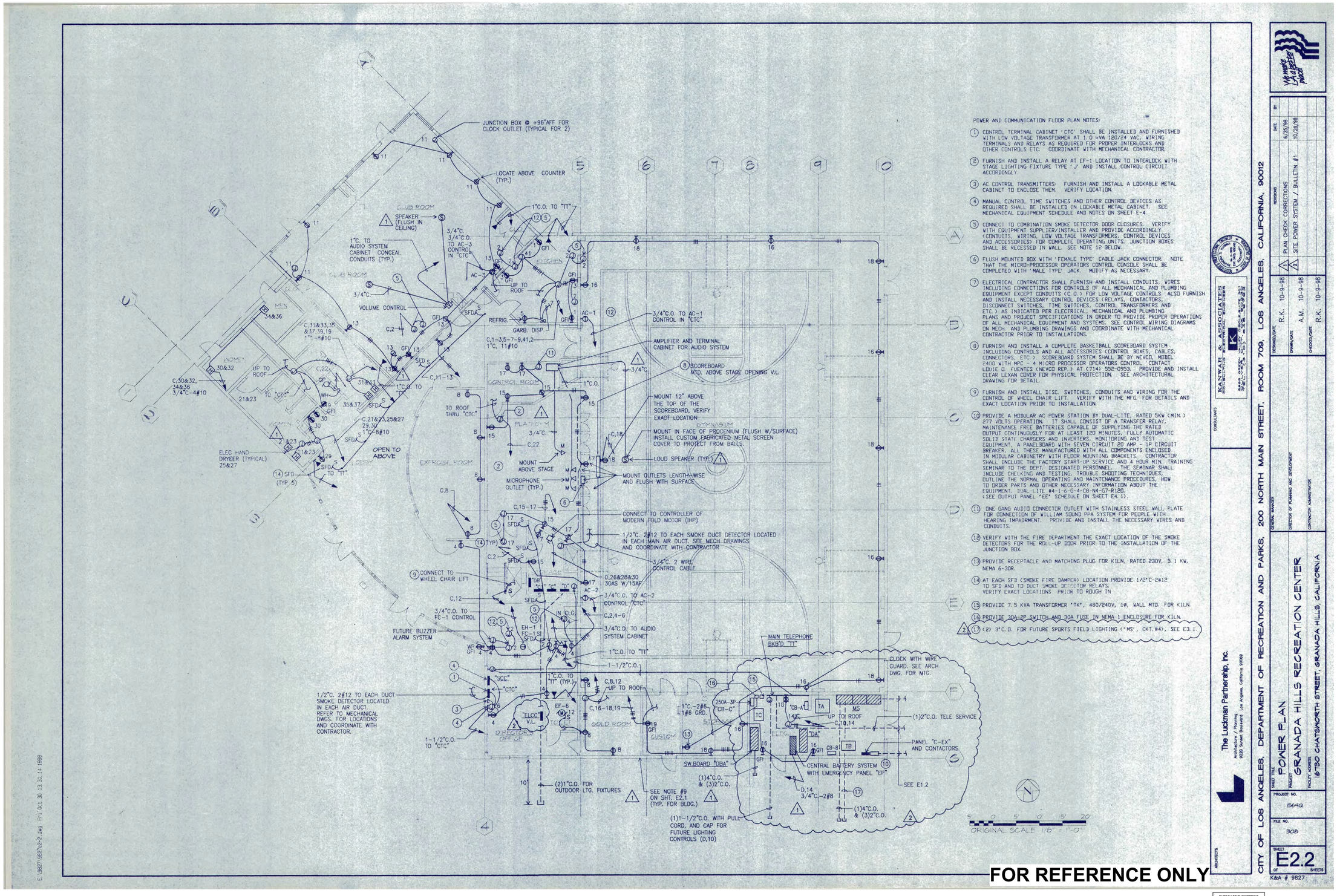

POWER AND COMMUNICATION FLOOR PLAN NOTES:

1. CONTROL TERMINAL CABINET 'CTC' SHALL BE INSTALLED AND FURNISHED WITH LOW VOLTAGE TRANSFORMER AT 1.0 kVA 120/24 VAC, WIRING TERMINALS AND RELAYS AS REQUIRED FOR PROPER INTERLOCKS AND OTHER CONTROLS ETC. COORDINATE WITH MECHANICAL CONTRACTOR.
2. FURNISH AND INSTALL A RELAY AT EF-1 LOCATION TO INTERLOCK WITH STAGE LIGHTING FIXTURE TYPE 'J' AND INSTALL CONTROL CIRCUIT ACCORDINGLY.
3. AC CONTROL TRANSMITTERS: FURNISH AND INSTALL A LOCKABLE METAL CABINET TO ENCLOSE THEM. VERIFY LOCATION.
4. MANUAL CONTROL TIME SWITCHES AND OTHER CONTROL DEVICES AS REQUIRED SHALL BE INSTALLED IN LOCKABLE METAL CABINET. SEE MECHANICAL EQUIPMENT SCHEDULE AND NOTES ON SHEET E-4.
5. CONNECT TO COMBINATION SMOKE DETECTOR DOOR CLOSURES. VERIFY WITH EQUIPMENT SUPPLIER/INSTALLER AND PROVIDE ACCORDINGLY (CONDUITS, WIRING, LOW VOLTAGE TRANSFORMERS, CONTROL DEVICES AND ACCESSORIES) FOR COMPLETE OPERATING UNITS. JUNCTION BOXES SHALL BE RECESSED IN WALL. SEE NOTE 12 BELOW.
6. FLUSH MOUNTED BOX WITH 'FEMALE TYPE' CABLE JACK CONNECTOR. NOTE THAT THE MICRO-PROCESSOR OPERATORS CONTROL CONSOLE SHALL BE COMPLETED WITH 'MALE TYPE' JACK. MODIFY AS NECESSARY.
7. ELECTRICAL CONTRACTOR SHALL FURNISH AND INSTALL CONDUITS, WIRES INCLUDING CONNECTIONS FOR CONTROLS OF ALL MECHANICAL AND PLUMBING EQUIPMENT EXCEPT CONDUITS (C.O.) FOR LOW VOLTAGE CONTROLS. ALSO FURNISH AND INSTALL NECESSARY CONTROL DEVICES (RELAYS, CONTACTORS, DISCONNECT SWITCHES, TIME SWITCHES, CONTROL TRANSFORMERS AND ETC.) AS INDICATED PER ELECTRICAL, MECHANICAL AND PLUMBING PLANS AND PROJECT SPECIFICATIONS IN ORDER TO PROVIDE PROPER OPERATIONS OF ALL MECHANICAL EQUIPMENT AND SYSTEMS. SEE CONTROL WIRING DIAGRAMS ON MECH. AND PLUMBING DRAWINGS AND COORDINATE WITH MECHANICAL CONTRACTOR PRIOR TO INSTALLATIONS.
8. FURNISH AND INSTALL A COMPLETE BASKETBALL SCOREBOARD SYSTEM INCLUDING CONTROLS AND ALL ACCESSORIES (CONTROL BOXES, CABLES, CONNECTORS, ETC.). SCOREBOARD SYSTEM SHALL BE BY NEVCO, MODEL 2400 WITH MPC - 4 MICRO PROCESSOR OPERATORS CONTROL. CONTACT LOUIE D. FUENTES (NEVCO REP.) AT (714) 552-0953. PROVIDE AND INSTALL CLEAR LEXAN COVER FOR PHYSICAL PROTECTION. SEE ARCHITECTURAL DRAWING FOR DETAIL.
9. FURNISH AND INSTALL DISC. SWITCHES, CONDUITS AND WIRING FOR THE CONTROL OF WHEEL CHAIR LIFT. VERIFY WITH THE MFG. FOR DETAILS AND EXACT LOCATION PRIOR TO INSTALLATION.
10. PROVIDE A MODULAR AC POWER STATION BY DUAL-LITE, RATED 5KW (MIN.) 277 VOLTS OPERATION. IT SHALL CONSIST OF A TRANSFER RELAY, MAINTENANCE FREE BATTERIES CAPABLE OF SUPPLYING THE RATED OUTPUT CONTINUOUSLY FOR AT LEAST 120 MINUTES. FULLY AUTOMATIC SOLID STATE CHARGERS AND INVERTERS, MONITORING AND TEST EQUIPMENT, A PANELBOARD WITH SEVEN CIRCUIT 20 AMP - 1P CIRCUIT BREAKER. ALL THESE MANUFACTURED WITH ALL COMPONENTS ENCLOSED IN MODULAR CABINETRY WITH FLOOR MOUNTING BRACKETS. CONTRACTOR SHALL INCLUDE THE FACTORY START-UP SERVICE AND 4 HOUR MIN. TRAINING SEMINAR TO THE DEPT. DESIGNATED PERSONNEL. THE SEMINAR SHALL INCLUDE CHECKING AND TESTING, TROUBLE SHOOTING TECHNIQUES, OUTLINE THE NORMAL OPERATING AND MAINTENANCE PROCEDURES, HOW TO ORDER PARTS AND OTHER NECESSARY INFORMATION ABOUT THE EQUIPMENT. DUAL-LITE #4-1-6-G-4-CB-N4-G7-R120. (SEE OUTPUT PANEL "EE" SCHEDULE ON SHEET E4.1).
11. ONE GANG AUDIO CONNECTOR OUTLET WITH STAINLESS STEEL WALL PLATE FOR CONNECTION OF WILLIAM SOUND PPA SYSTEM FOR PEOPLE WITH HEARING IMPAIRMENT. PROVIDE AND INSTALL THE NECESSARY WIRES AND CONDUITS.
12. VERIFY WITH THE FIRE DEPARTMENT THE EXACT LOCATION OF THE SMOKE DETECTORS FOR THE ROLL-UP DOOR PRIOR TO THE INSTALLATION OF THE JUNCTION BOX.
13. PROVIDE RECEPTACLE AND MATCHING PLUG FOR KILN, RATED 230V, 5.1 KW, NEMA 6-30R.
14. AT EACH SFD (SMOKE FIRE DAMPER) LOCATION PROVIDE 1/2"C-2#12 TO SFD AND TO DUCT SMOKE DETECTOR RELAYS. VERIFY EXACT LOCATIONS PRIOR TO ROUGH IN
15. PROVIDE 7.5 KVA TRANSFORMER 'TK', 480/240V, 1Ø, WALL MTD. FOR KILN.
16. PROVIDE 30A-2P SWITCH AND 30A FUSE IN NEMA 1 ENCLOSURE FOR KILN.
17. (2) 3"C.O. FOR FUTURE SPORTS FIELD LIGHTING ('MS', CKT. #4), SEE E3.1.

CONSULTANTS

KANTAR & ASSOCIATES
Electrical Engineers
5757 Century Blvd., Suite 550
Los Angeles, CA 90045
(310) 670-1515 FAX (310) 670-1595

The Luckman Partnership, Inc.
Architecture / Planning
9220 Sunset Boulevard, Los Angeles, California 90069

ARCHITECTS

NO.	REVISION DESCRIPTION	DATE	BY
1	PLAN CHECK CORRECTIONS	6/25/98	
2	SITE POWER SYSTEM // BULLETIN #1	10/28/98	

	DESIGNED/DATE	DRAWN/DATE	CHECKED/DATE
	R.K. 10-9-98	A.M. 10-9-98	R.K. 10-9-98

CITY OF LOS ANGELES, DEPARTMENT OF RECREATION AND PARKS, 200 NORTH MAIN STREET, ROOM 709, LOS ANGELES, CALIFORNIA, 90012

GENERAL MANAGER — DIRECTOR OF PLANNING AND DEVELOPMENT — CONTRACTOR ADMINISTRATOR

SHEET TITLE: POWER PLAN
PROJECT: GRANADA HILLS RECREATION CENTER
PROJECT NO. 1569Q
FACILITY ADDRESS: 16730 CHATSWORTH STREET, GRANADA HILLS, CALIFORNIA
FILE NO. 308
SHEET E2.2 OF SHEETS
K&A # 9827

FOR REFERENCE ONLY

"AS-BUILT" DRAWING **FOR REFERENCE ONLY** (NOT TO SCALE)

GENERAL NOTES: 1. NOT TO SCALE 2. DIMENSIONS TO BE VERIFIED IN FIELD

BUREAU OF ENGINEERING
OFFICIAL RECORD

BUREAU OF ENGINEERING
ENGINEERING
CITY OF LOS ANGELES

BUILDING NO. -
INDEX NO. RP-300118

LICENSED ARCHITECT — R. P. SPARANO — No. C-28244 — EXP. 1-30-21 — STATE OF CALIFORNIA

BUREAU OF PUBLIC WORKS
DEPARTMENT OF PUBLIC WORKS
CITY OF LOS ANGELES

CITY ENGINEER	DATE:
	03/03/20
	03/03/20
	03/03/20
	03/03/20
	03/03/20

GARY LEE MOORE, PE, ENV SP — CITY ENGINEER
ARCHITECTURAL DIVISION
ARCHITECT/ENGINEER: JOHN SPARANO LIC. NO.: C-28244
DESIGNED BY: SPARANO + MOONEY ARCHITECTURE
DRAWN BY: JORGE BELTRAN
CHECKED BY: LUDWING JUAREZ
APPROVED BY:

VERTICAL CONTROL:
HORIZONTAL CONTROL:
SHEET TITLE: AS-BUILTS E2.2 1998
PROJECT: GRANADA HILLS POOL AND BATHHOUSE REPLACEMENT PROJECT
ADDRESS: 16730 CHATSWORTH STREET GRANADA HILLS, CA 91344

BID SET
PROJECT ISSUE DATE: 06/22/21

WORK ORDER NO. #E170517
PLAN FILE NO.
DRAWING NO. A0.20
SHEET 0 OF SHEETS

PLOTTED:3/2/2020 9:30:50 PM

THE CITY OF LOS ANGELES OR ITS OFFICERS OR AGENTS SHALL NOT BE RESPONSIBLE FOR THE ACCURACY OR COMPLETENESS OF ELECTRONIC COPIES OF THIS PLAN SHEET.

FILE PATH: BIM 360://Granada Hills Pool Renovation/A_Granada-Hills_2017.rvt
E:\9827\9827cb-2.dwg Fri Oct 30 13:30:14 1998

TTLB TEMPLATE REVISION DATE: 02/2013
SHEET ISSUE DATE: 04/30/19

REVISION DATES (DESIGN STAGE ONLY)

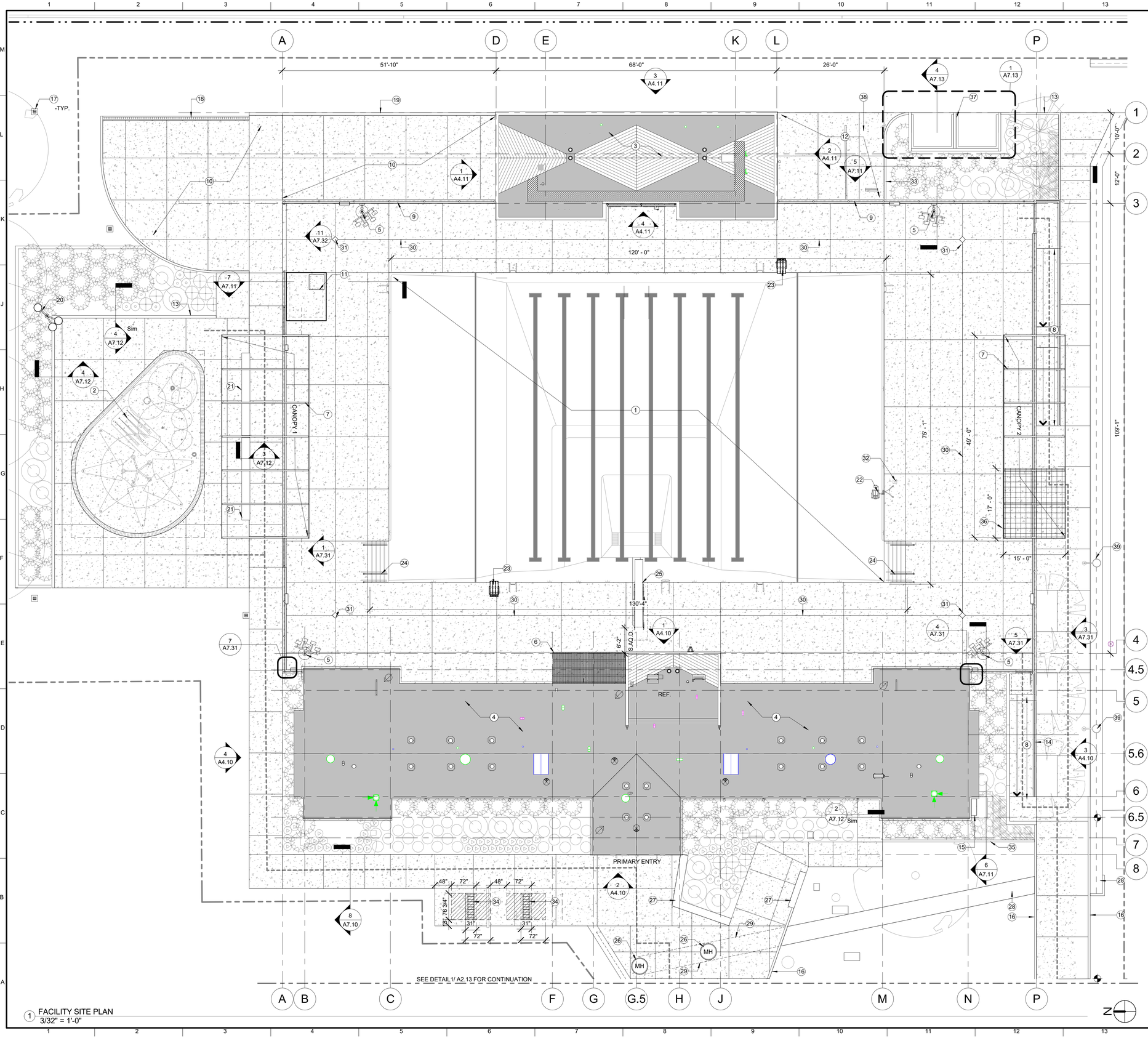

1 FACILITY SITE PLAN
3/32" = 1'-0"

SITE PLAN GENERAL NOTES

1. GENERAL CONTRACTOR SHALL ARRANGE A MEETING WITH PARKS GROUND MAINTENANCE BEFORE ANY WORK IS PERFORMED TO VERIFY EXISTING IRRIGATION SYSTEM. GENERAL CONTRACTOR TO REPAIR ANY DAMAGE CAUSED TO IRRIGATION SYSTEM AND LANDSCAPING DURING CONSTRUCTION.
2. S.C.D. FOR GRADE, UTILITY INFO FOR DETAILS.
3. S.L.D. FOR IRRIGATION, LANDSCAPE INFO AND DETAILS.
4. SEE ELEVATION 4/A411 FOR WALL MOUNTED SCOREBOARD LOCATION. S.AQ.D. FOR MORE INFO.
5. FOR PIPING PENETRATION THROUGH RATED WALLS SEE DETAIL 12/A7.50.
6. BUILDING ADDRESS NUMBERS SHALL BE PROVIDED AND MAINTAINED SO AS TO BE PLAINLY VISIBLE AND LEGIBLE . THE NUMBERS HSALL BE A MINIMUM OF 3 INCHES HIGH, 1 INCH WIDE WITH A 3/8 INCH STROKE. FO RBUILDINGS SET BACK MOR ETHAN 150 FEET FROM STREET, THEN NUMBERS SHALL BE A MINIMUM OF 5 INCHES HIGH, 2 INCHES WIDE WITH A 1/2 INCH STROKE PER FIRE CODE.
7. A LOCKABLE BOX SHALL BE PROVIDED AT ALL GATED VEHICULAR ENTRANCES , AND AT FACILITY ENTRANCES AS REQUIRED BY THE FIRE CODE OFFICE IN ACCORDANCE WITH FIRE CODE.
8. FIRE DEPARTMENT VEHICULAR ACCESS MUST BE MAINTAINED IN A SERVICEABLE MANNER PRIOR TO AND DURING THE TIME OF CONSTRUCTION PER FIRE CODE.
9. POTABLE FIRE EXTINGUISHER REQUIREMENTS SHALL BE DETERMINED BY THE FIRE DEPARTMENT FIELD INSPECTOR IN ACCORDANCE WITH FIRE CODE.
10. THE MEANS OF EGRESS TRAVEL SHALL BE ILLUMINATED AT ANY TIME THE BUILDING IS OCCUPIED WITH A LIGHT INTENSITY OF NOT LESS THAN 1 FOOT-CANDLE AT THE FLOOR LEVEL PER BUILDING CODE. S.E.D. FOR MORE INFO.
11. THE POWER SUPPLY FOR THE MEANS OF EGRESS EXIT ILLUMINATION SHALL BE SUPPLIED FROM SEPARATE SOURCES IN ACCORDANCE WITH BUILDING CODE. S.E.D. FOR MORE INFO.
12. PROVIDE ANTI-GRAFFITI FINISH AT THE FIRST 9 FEET, MEASURED FROM GRADE, AT EXTERIOR WALLS AND DOORS. LAMC 91.6306
13. SEE SHEET A2.12 FOR ADDITIONAL POOL DECK INFORMATION.
14. AT LEAST 25%OF THE TOTAL SITE HARDSCAPE SHALL CONSIST OF UNCOLORED CONCRETE.

GENERAL SITE LIGHTING NOTES

THE OUTDOOR LIGHTING SYSTEMS SHALL BE DESIGNED AND INSTALLED TO COMPLY WITH ALL OF THE FOLLOWING:

A. THE MINIMUM REQUIREMENTS IN THE CALIFORNIA ENERGY CODE FOR LIGHTING ZONES 1-4
B. BACKLIGHT, UPLIGHT AND GLARE (BUG) RATING AS DEFINED IN IESNA TM-15-11
C. ALLOWABLE BUG RATING NOT EXCEEDING THOSE SHOWN IN ON TABLE 5.106.8

GRAPHIC LEGEND

- EXTENT OF WORK
- ADA PATH OF TRAVEL 48" MIN. WIDTH
- PROPERTY LINE
- (N) HARDSCAPE, S.C.D.
- SLOPE ARROW. S.C.D.

BUREAU OF ENGINEERING
OFFICIAL RECORD

KEYNOTE LEGEND

1 (N) SWIMMING POOL. 9,110 S.F. S.AQ.D. SHEET SP-1 FOR MORE INFO.
2 (N) SPLASH PAD, S.AQ.D.
3 (N) NEW EQUIPMENT BUILDING
4 (E) BATHHOUSE TO BE RENOVATED.
5 (N) NEW LIGHT POLE, S.E.D. & MUSCO STRUCT. DWGS FOR MORE INFO.
6 (N) STEEL SHADE STRUCTURE. PAINT PER SCHEDULE.
7 (N) T.S. STRUCTURE FOR PHOTOVOLTAIC PANELS
8 (N) CONCRETE RAMP. S.C.D.
9 (N) TUBE STEEL FENCE ON (N) 10" W CONC CURB, REF DETAILS.
10 (N) CONC. DRIVEWAY. S.C.D.
11 (N) CONC. BALANCE TANK AND HATCH, FOR DIMENSIONS, REINFORCEMENT & HATCH INFO. SEE SHEET WP-4 AND STRUCT. DWGS.
12 (N) CONC. PAD. S.C.D.
13 (N) PLANTER BED W/ RETAINING WALL/CURB. S.C.D AND S.L.D.
14 (N) 1 1/2" GALV. STL. PIPE GUARDRAIL W/ PTD. FINISH.
15 (E) IRRIGATION CONTROLLER BOX TO REMAIN AND BE PTROTECTED DURING CONSTRUCTION.SEE SHEETS L-0.20 AND CD1.01 FOR MORE INFO.
16 (N) CONCRETE CURB. S.C.D. FOR MORE INFO.
17 (N) BUBBLER CATCH BASIN. S.C.D. FOR MORE INFO.
18 (N) TRENCH DRAIN. S.C.D. FOR MORE INFO.
19 (N) CONC. RETAINING WALL / CURB.
20 (N) LIGHT POLE AT SPLASHPAD AREA, S.E.D. FOR MORE INFO.
21 (N) NEW CONCRETE BENCH.
22 (N) ADA LIFT. S.AQ.D. FRO MORE INFO.S
23 (N) LIFEGUARD CHAIR. S.AQ.D. FOR MORE INFO.
24 (N) POOL STEPS AND HANDRAIL. S.AQ.D. FOR MORE INFO.
25 (N) 1M DIVING BOARD.W/ THICKENED SLAB, SEE DETAIL 1/SP-9 FOR MORE INFO.
26 (N) CAST IRON MANHOLE COVER, S.C.D. SHEET CD101 FOR MORE INFO.
27 (E) CONC. BENCH TO REMAIN, BE SANDBLASTED, PATCHED AND BE PREPARED TO RECEIVE SKATEBOARD STOPPERS.SEE DETAIL 9/A7.10 SIM.FOR MORE INFO.
28 (N) CONC. V-GUTTER & ASSOCIATED MOWSTRIPS, S.C.D. FOR MORE INFO.
29 (N) PARKWAY DRAIN BELOW (SHOWN DASH). VERIFY IN FIELD INVERT. S.C.D. FOR MORE INFO.
30 (N) SLOT DRAIN SYSTEM. S.C.D. AND S.AQ.D. FOR MORE INFO.
31 (N) SLOT DRAIN SYSTEM CATCH BASIN.SEE SHEET SP-14. S.AQ.D. AND S.C.D. FOR MORE INFO
32 (N) DECK HYDRANT. S.P.D. AND S.AQ.D. FOR MORE INFO.
33 (N) REINF. CONC. CURB WALL & FTG., S.C.D. FOR MORE INFO.
34 (N) 8-BIKE CAPACITY SINGLE BIKE RACk PER LAMC 12.21A4. SEE SHEET SEE PARKING REQUIREMENTS NOTES ON SHEET G0.21 FO RMORE INFO.
35 (N) PLANTER AREA MOWSTRIP. S.L.D. AND S.C.D. FOR MORE INFO
36 (N) 17'-0"X 15'-0" DESIGNATED ROOF SOLAR AREA WITH TOTAL AREA EQUAL TO OR GREATER THAN 15% OF THE POOL EQUIPMENT'S ROOF AREA. (1,700 SF.X.15=255 S.F.)
37 (N) TRASH AND RECYCLING ENCLOSURE. SEE SHEET A7.13 FOR MORE INFO. S.S.D.
38 (N) STANDARD 9'-0"W X 18'-0"L PARKING STALL.
39 (E) LIGHT POLE TO BE PROTECTED IN PLACE DURING CONSTRUCTION, PROVIDE A NEW CONC. FIN. BASE & METAL BASE COVER FROM IMPERIAL POLES L.A.

THE CITY OF LOS ANGELES OR ITS OFFICERS OR AGENTS SHALL NOT BE RESPONSIBLE FOR THE ACCURACY OR COMPLETENESS OF ELECTRONIC COPIES OF THIS PLAN SHEET.

TTLB TEMPLATE REVISION DATE: 02/2013
SHEET ISSUE DATE: 12/11/17
FILE PATH: BIM 360://Granada Hills Pool Renovation/A_Granada-Hills_2017.rvt

REVISION DATES (DESIGN STAGE ONLY)

ENGINEERING
CITY OF LOS ANGELES

BUREAU OF ENGINEERING

NO.	REVISION DESCRIPTION	DATE	BY

BUILDING NO. -
INDEX NO. RP-300118

JOHN P. SPARANO
No. C-26244
3-30-21
STATE OF CALIFORNIA

DEPARTMENT OF PUBLIC WORKS
CITY OF LOS ANGELES

GARY LEE MOORE, PE, ENV SP
CITY ENGINEER

		DATE:
ARCHITECTURAL DIVISION		
ARCHITECT/ENGINEER:	JOHN SPARANO	LIC. NO.: C-26244
DESIGNED BY:	SPARANO + MOONEY ARCHITECTURE	03/03/20
DRAWN BY:	JORGE BELTRAN	03/03/20
CHECKED BY:	LUDWING JUAREZ	03/03/20
APPROVED BY:		03/03/20

VERTICAL CONTROL:
HORIZONTAL CONTROL:

SHEET TITLE: FACILITY SITE PLAN

PROJECT: GRANADA HILLS POOL AND BATTHHOUSE REPLACEMENT PROJECT
ADDRESS: 16730 CHATSWORTH STREET GRANADA HILLS, CA 91344

BID SET
PROJECT ISSUE DATE: 06/22/21

WORK ORDER NO. #E170517
PLAN FILE NO. #308
DRAWING NO. A1.10
SHEET 0 OF SHEETS

PLOTTED:8/18/2020 1:19:29 PM

ABATEMENT GENERAL NOTES

1. PRIOR TO RENOVATION/ REMODELNG ACTIVITIES , THE FOLLOWING **ASBESTOS-CONTAINING MATERIAL (ACM)** WILL NEED TO BE ABATED IF IMPACTED BY THE PLANNED PROJECT:
   - A. ASPHALTIC ROOFING MATERIALS (ROOF CORE) - BATHHOUSE (ACM)
   - B. ROOF PENETRATION MASTIC- BATHHOUSE (ACM)
   - C. GREY ROLLED ROOFING- POOL EQUIPMENT BUILDING (ACM)
   - D. GREY ROOF MASTIC- POOL EQUIPMENT BUILDING- (ACM)
   - E. GREY ROLL ROOFING- SPECTATOR SHELTER (ACM)
   - F. ROOF PATCH MASTIC- SPECTATOR SHELTER (ACM)
   - G. EXTERIOR STUCCO- BATHHOUSE (ACCM)
   - H. INTERIOR PLASTER WALLS- BATHHOUSE (ACCM)

PRIOR TO ANY RENOVATION AND /OR DEMOLITION ACTIVITIES, THE ABOVE IMPACTED (ACMs) WILL NEED TO BE ABATED. AS THE ACCM EXTERIOR STUCCO AND INTERIOR BEIGE ROUGH-FINISH PLASTER WILL BE IMPACTED BY THE PLANED BATHHOUSE RENOVATION, THE ACCMs MUST BE ABATED AS WELL. THE ABATEMENT MUST BE PERFORMED BY A CAL/OSHA LICENSED ASBESTOS ABATEMENT CONTRACTOR USING CURRENTLY ASBESTOS TRAINED WORKERS AND SUPERVISORS AND WORK PRACTICES AND ENGINEERING CONTROLS IN ACCORDANCE WITH TITLE 8 OF CALIFORNIA CODE OF REGULATIONS (ccr) 1529 AND SOUTH COAST AIR QUALITY MANAGEMENT DISTRICT RULE 1403. ACCM WASTE MAY BE DISPOSED OF AS NON-REGULATED WASTE. ACMS AND ACCMS NOT ABATED CAN BE MANAGED IN PLACE THROUGH AN OPERATIONS AND MAINTENANCE (O & M) PLAN.
IN THE EVENT THAT SUSPECT ACMS THAT HAVE NOT BEEN PREVIOUSLY SAMPLED ARE OBSERVED DURING THE DEMOLITION/ RENOVATION ACTIVITIES, THESE MATERIALS SHOULD BE ASSUMED TO CONTAIN ASBESTOS UNTIL SUCH TIME THAT THEY CAN BE ACCESSED SAMPLED AND EVALUATED FOR ASBESTOS CONTENT. IT IS THE FURTHER RECOMMENDED THAT ASBESTOS ABATEMENT PROCEDURES BE MONITORED BY AN INDEPENDENDT CERTIFIED ASBESTOS CONSULTANT KNOWLEDGEABLE IN ASBESTOS ABATEMENT PROCEDURES.

2. BASED ON RESULTS OF **LEAD-BASED PAINT (LBP)** SURVEY, A LEAD CONCENTRATION GREATER THAN 0.7 MG/CM² WAS DETECTED IN THE FOLLOWING CONPONENTS:
   - A. CERAMIC TILE, PAINTED BLACK, AT THE NORTH AND SOUTH WALLS OF THE POOL (LANE MARKERS)
   - B. CERAMICS SINK IN THE DIRECTOR'S OFFICE OF THE BATHHOUSE
   - C. TAN CERAMIC WALL TILE IN THE MEN'S RESTROOM OF THE BATHHOUSE
   - D. CERAMIC URINALS IN THE MEN'S RESTROOM OF THE BATHHOUSE
   - E. CERAMIC TOILETS IN THE MEN'S AND WOMEN'S RESTROOMS OF THE BATHHOUSE
   - F. CERAMIC SINK IN THE UTILITY ROOM (WOMEN' SIDE) OF THE BATHHOUSE

PAINTED SURFACES AND CERAMIC COMPONENTS (TILES AND PLUMBING FIXTURES) WERE OBSERVED TO BE GENERALLY IN GOOD CONDITION
ABATEMENT/DEMOLITION WORK INVOLVING LEAD-CONTAINING MATERIALS MUST BE PERFORMED BY WORKERS THAT HAVE UNDERGONE THE NECCESSARY LEAD TRAINING AND ARE CDPH CERTIFIED LEAD WORKERS AND SUPERVISORS.
THE LEAD ABATEMENT ACTIVITIES WILL NEED TO BE MONITORED BY A CDPH CERTIFIED PROJECT MONOTOR KNOWLEDGEABLE IN LEAD STABILIZATION AND ABATEMENT PROOCEDURES.
TITLE 8 CCR 15321 (LEAD) REQUIRES WORKERS THAT PERFORM EITHER MANUAL DEMOLITION OR MANUAL SCRAPING OR SANDING OF LEAD PAINTED SURFACES TO UNDERGO MEDICAL MONITORING AND AN EXPOSURE ASSESSMENT INCLUDING AIR MONITORING OF THE BREATHING ZONE IF EXPOSED TO AIRBORNE LED DUST ABOVE THE CAL/OSHA ACTION LEVEL OF 30 MICROGRAMS PER CUBIC METER OF AIR OVER AN 8-HOUR TIME WEIGHTED AVERAGE.
IN THE EVENT THAT SUSPECT LBPs ARE OBSERVED DURING THE RENOVATIONN/DEMOLITION ACTIVITIES THAT WERE NOT PREVICUSLY SAMPLED, THESE MATERIASL SHOULD BE ASSUMED TO CONTAIN CONCENTRATIONS EXCEEDING 0.7 MG/CM² OR 600 PPM UNTIL SUCH TIME THAT THEY CAN BE SAMPLED AN DEVALUATED FOR LEAD CONTENT

SEE ASBESTOS AND LEAD-BASE PAINT SURVEY REPORT BY CONVERSE CONSULTANTS PROJECT No: 15-41-273-01 FOR MORE DETAILED INFORMATION.

GRAPHIC LEGEND

(E) WALL/ELEMENT TO REMAIN

(E) MASONRY WALL TO REMAIN

(E) ELEMENT TO BE DEMOLISHED

NOTE: FOR SMALLER ELEMENTS, DEMOLITION DASHES DO NOT SHOW, REF KEYNOTES FOR CLARIFCATION.

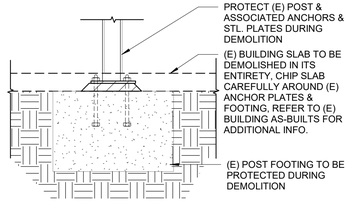

2 TYP. (E) INTERIOR FOOTING DETAIL
3/4" = 1'-0"

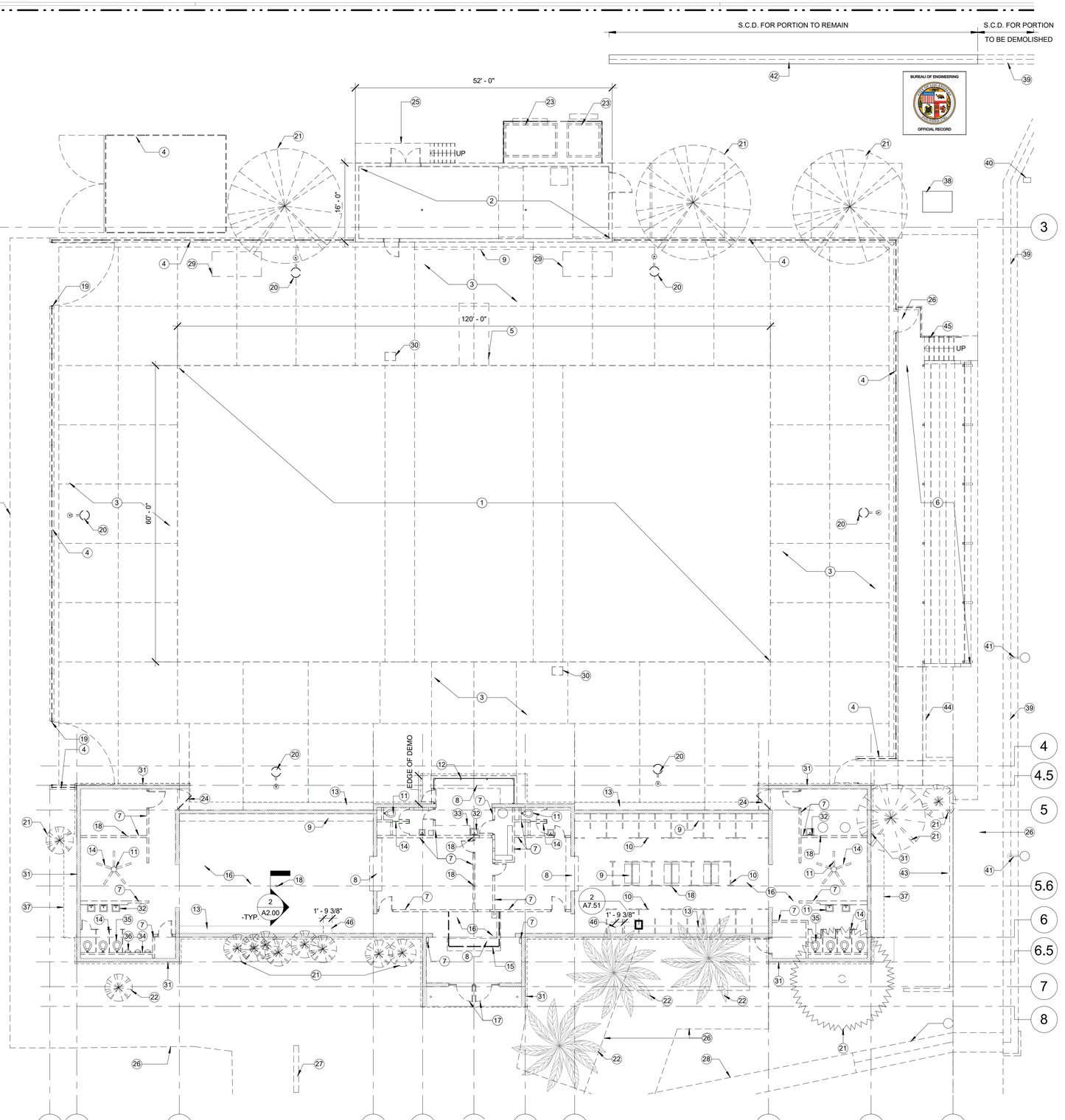

1 DEMO PLAN
3/32" = 1'-0"

GENERAL NOTES

1. THE DEMOLITION SCOPE OF THE PROJECT SHALL BE AS DESCRIBED BELOW, BUT NOT LESS THAN ANY DEMOLITION REQUIRED TO ACHIEVE THE NEW CONSTRUCTION AS ILLUSTRATED IN THESE DOCUMENTS.
2. THE DEMOLITION PLAN AND ITS ASSOCIATE KEYNOTES ARE PROVIDED TO ILLUSTRATE THE SCALE AND SCOPE OF DEMOLITION. CONTRACTOR SHALL VISIT THE SITE PRIOR TO BID TO VERIFY DEMOLITION SCOPE.
3. DEMOLITION INCLUDES REMOVAL OF (E) UTILITY LINES WHERE (N) UTILITY LINES ARE TO BE PROVIDED.
4. DEMOLITION INCLUDES COMPLETE REMOVAL OF POOL EQUIPMENT BUILDING AND ALL ASSOCIATED ELEMENTS. SEE ASBESTOS AND LEAD-BASED PAINT SURVEY REPORT FOR MORE INFO.
5. DEMOLITION INCLUDES COMPLETE REMOVAL OF POOL, POOL DECK, PERIMETER CURBS AND RETAINING WALLS, FENCING, LIGHTING, AND ALL ASSOCIATED ELEMENTS. SEE ASBESTOS AND LEAD-BASED PAINT SURVEY REPORT FOR MORE INFO.
6. BATHHOUSE PARTIAL DEMOLITION INCLUDES ALL PLASTER ON MTL STUD WALLS, ALL ELECTRICAL ELEMENTS, ALL PLUMBING ELEMENTS, ALL MECHANICAL ELEMENTS, AND ENTIRE CONCRETE FLOOR. SEE ASBESTOS AND LEAD-BASED PAINT SURVEY REPORT FOR MORE INFO.
7. BATHHOUSE ROOF DECK AND SHINGLES TO BE REMOVED IN THEIR ENTIRETY. FRAMING MEMBERS TO REMAIN AND SHALL BE PROTECTED. SEE ASBESTOS AND LEAD -BASED PAINT SURVEY FOR MORE INFO.
8. BATHHOUSE MASONRY WALLS (UNO), STEEL COLUMNS AND ASSOCIATED FOOTINGS SHALL REMAIN AND BE PROTECTED.
9. LEAVE REBAR THAT TIES INTO (E) MASONRY WALL AND (E) CONCRETE FOOTING IN PLACE AND PROTECT.
10. SEE LANDSCAPE SHEET L-0.10 FOR ADDITIONAL PROPOSED TREE REMOVAL LOCATIONS
11. SEE SHEET G0.50 FOR ADDITIONAL SITE HARDSCAPE TO BE DEMOLISHED/ HARDSCAPE TO BE PROTECTED INFO. S.C.D FOR SCOPE AND DETAIL.
12. PROVIDE A CONSTRUCTION FENCE AROUND THE PROJECT SCOPE BOUNDARY AS SHOWN ON SHEET G0.50 FOR THE TOTAL EXTENT CONSTRUCTION AND AS APPROVED BY THE OAR.
13. PROVIDE SEWER CAP PER UTILITY OWNERS REQUIREMENTS, S.C.D. FOR MORE INFORMATION.
14. SEE SHEET A0.02 "AS-BUILT A-2" SHEET FOR MORE INFO.
15. SEE CIVIL SHEET CD101 FOR MORE ADDITIONAL DEMOLITION INFO.
16. NON-RESIDENTIAL ADDITIONS AND ALTERATIONS SHALL REQUIRE VERIFICATION THAT CALIFORNIA PROHIBITED UNIVERSAL WASTE MATERIAL ARE DISPOSED OF PROPERLY AND DIVERTED FROM LANDFILLS.

KEYNOTE LEGEND

1 POOL AND ASSOCIATED STRUCTURAL FOUNDATION TO BE DEMOLISHED AND REMOVED IN THEIR ENTIRETY.POOL CERAMIC TILES CONTAIN LEAD-ASBESTOS PAINT. SEE ASBESTOS AND LEAD-PAINT SURVEY REPORT FOR MORE INFO. SEE SEE GEOTECHNICAL REPORT FOR MORE INFO.

2 POOL EQUIPMENT BUILDING AND ASSOCIATED PITS, FOOTINGS, AND FOUNDATION TO BE DEMOLISHED AND REMOVED IN ITS ENTIRETY. GREY ROLLED ROOFING AND GREY ROOF MASTIC TO BE ABATED. SEE ASBESTOS AND LEAD-PAINT SURVEY REPORT FOR MORE INFO. SEE GEOTECHNICAL REPORT FOR MORE INFO.

3 POOL DECK AND ASSOCIATED PITS, FOOTINGS, AND FOUNDATION TO BE DEMOLISHED AND REMOVED IN ITS ENTIRETY. SEE GEOTECHNICAL REPORT FOR MORE INFO.

4 CHAINLINK GATE,FENCING, POSTS, CURB, AND ASSOCIATED FOUNDATIONS TO BE DEMOLISHED AND REMOVED IN THEIR ENTIRETY, TYPICAL.

5 POOL DIVING BOARD AND ASSOCIATED FOUNDATIONS TO BE DEMOLISHED AND REMOVED IN THEIR ENTIRETY.

6 SPECTATOR SEATING AND ASSOCIATED FOUNDATION AND SUPER STRUCTURE (ROOF AND FRAMING) TO BE DEMOLISHED AND REMOVED IN ITS ENTIRETY.GREY ROLLED ROOFING AND ROOF PATCH MASTIC ARE TO BE ABATED. SEE ASBESTOS AND LEAD-PAINT SURVEY FOR MORE INFO.

7 INTERIOR PLASTER WALLS TO BE DEMOLISHED AND REMOVED IN THEIR ENTIRETY, TYPICAL. SEE ASBESTOS AND LED-BASED PAINT SURVEY REPORT FOR MORE INFO.REMOVE ALL ASSOCIATED ELEMENTS, I.E. DOORS, ELECTRICAL, ANCHORS, ETC.

8 CONCRETE COUNTER TO BE DEMOLISHED AND REMOVED IN ITS ENTIRETY.

9 CONCRETE BENCH TO BE DEMOLISHED AND REMOVED IN ITS ENTIRETY.

10 CHANGING PARTITIONS TO BE DEMOLISHED AND REMOVED IN ITS ENTIRETY.

11 PLUMBING FIXTURES TO BE DEMOLISHED AND REMOVED IN THEIR ENTIRETY.

12 DEMOLISH & REMOVE GLAZING & SUPPORTING STRUCT. IN ITS ENTIRETY, DEMOLISH (E) ROOF BACK TO ADJACENT BRICK WALL & BEAM.

13 CONCRETE BENCH TO REMAIN AND BE PROTECTED.

14 TOILET/SHOWER PARTITIONS TO BE DEMOLISHED AND REMOVED IN ITS ENTIRETY.

15 MTL. SCREEN STRUCT. TO BE DEMOLISHED AND REMOVED IN ITS ENTIRETY.

16 INTERIOR BUILDING SLAB TO BE DEMOLISHED & REMOVED IN ITS ENTIRETY. PRESERVE FOUNDATIONS FOR STRUCTURAL ELEMENTS TO REMAIN. REMOVE ASSOCD ITEMS I.E. PLUMBING DRAINS, PLUMBING PIPING, ETC.

17 ENTRY DOORS TO BE DEMOLISHED AND REMOVED. ASSOCIATED (E) STEEL FRAME STRUCTURE TO REMAIN, PROTECT.

18 PROTECT (E) STRUCT. COLUMN DURING DEMOLITION. SEE DETAIL 2/A2.00 FOR MORE INFO.

19 CHAIN LINK GATE, ASSOCIATED POSTS AND FOUNDATIONS TO BE DEMOLISHED AND REMOVED IN THEIR ENTIRETY WITH REMAINDER OF FENCE DEMOLITION.

20 LIGHT POLES AND ASSOCD FTG'S, CONDUITS & WIRES TO BE DEMOLISHED.

21 PROPOSED TREE REMOVAL PER SHEET L-0.10 PENDING FORESTRY APPROVAL S.L.D. FOR MORE INFO.

22 (E) TREE TO REMAIN, PROTECT. S.L.D. FOR MORE INFO.

23 CHEMICAL STORAGE TANKS TO BE REMOVED AND ALL ASSOCIATED ELEMENTS (INCLUDING BUT NOT LIMITED TO FOUNDATIONS, SLABS, FENCING, PIPING, AND ELECTRICAL) TO BE DEMOLISHED IN THEIR ENTIRETY.

24 DEMOLISH (E) GATE/DOOR AND ASSOCIATED FOOTING.

25 CONC. LOADING DOCK W/ STAIRS AND ASSOCD WALLS, FOUNDATIONS, AND RAILINGS TO BE DEMOLISHED & REMOVED IN THEIR ENTIRETY.

26 CONCRETE SIDEWALK TO BE DEMOLISHED AND REPLACED. S.C.D. FOR SCOPE AND DETAIL.

27 BIKE RACK TO BE REMOVED & REPLACED W/ NEW 16 CAPACITY BIKE RACK.

28 CONCRETE STORM SWELL TO BE DEMOLISHED IN ITS ENTIRETY AND BE REPLACED WITH NEW. S.C.D. AND S.L.C. FOR MORE INFO.

29 (E) METAL BLEACHERS TO BE DEMOLISHED AND REMOVED IN ITS ENTIRETY.

30 (E) LIFEGUARD CHAIR TO BE DEMOLISHED AND REMOVED IN ITS ENTIRETY.

31 ALL (E) BATHHOUSE EXTERIOR AND INTERIOR STUCCO TO BE DEMOLISHED AND REMOVED IN ITS ENTIRETY AND REPLACED WITH NEW TO MATCH (E). TO BE PTD. PT-02. SEE ASBESTOS & LEAD-PAINT SURVEY REPORT FOR MORE INFO. EXPOSED BRICK WALLS TO BE CLEANED OF ALL DIRT & STAINED RESIDUE.

32 (E) CERAMIC SINK TO BE DEMOLISHED AND REMOVED IN ITS ENTIRETY. SEE ASBESTOS AND LEAD-PAINT SURVEY REPORT FOR MORE INFO.

33 (E) COUNTER TO BE DEMOLISHED AND REMOVED IN ITS ENTIRETY.

34 (E) TAN CERAMIC WALL TILE TO BE DEMOLISHED & REMOVED IN ITS ENTIRETY. SEE ASBESTOS & LEAD-PAINT SURVEY REPORT FOR MORE INFO.

35 (E) CERAMIC TOILET TO BE DEMOLISHED AND REMOVED IN ITS ENTIRETY. SEE ASBESTOS AND LEAD-PAINT SURVEY REPORT FOR MORE INFO.

36 (E) CERAMIC URINAL TO BE DEMOLISHED AND REMOVED IN ITS ENTIRETY. SEE ASBESTOS AND LEAD-PAINT SURVEY REPORT FOR MORE INFO.

37 (E) BATHHOUSE ROOF DECK AND SHINGLES TO BE REMOVED IN THEIR ENTIRETY. FRAMING MEMBERS TO REMAIN AND SHALL BE PROTECTED. ASPHALTIC ROOFING MATERIALS (ROOF CORE) AND ROOF PENETRATION MASTIC ARE ASBESTOS-CONTAINING MATERIALS. SEE ASBESTOS AND LEAD-BASED PAINT SURVEY FOR MORE INFO.

38 LOCATION OF UNIVERSAL WASTE BIN. SEE GENERAL NOTE 16/A2.00 (THIS SHEET) FOR MORE INFO.

39 (E) CONC. V-GUTTER TO BE DEMOLISHED & REPLACED W/ (N). S.C.D. FOR MORE INFO.

40 (E) YARD BOX, ASSOCD VALVING, CONTROL WIRES & PIPING TO BE RELOCATED OUTSIDE OF (N) V-GUTTER.

41 (E) LIGHT POLE TO BE PROTECTED IN PLACE DURING CONSTRUCTION, PROVIDE A NEW CONC. FIN. BASE & METAL BASE COVER FROM IMPERIAL POLES L.A.

42 (E) CONC. V-GUTTER TO REMAIN & BE PROTECTED,S.C.D. FOR MORE INFO.

43 CONCRETE RETAINING WALL AND ASSOCIATED FOUNDATIONS TO BE DEMOLISHED AND REMOVED IN THEIR ENTIRETY.

44 CONCRETE RAMP AND ASSOCIATED WALLS, FOUNDATIONS, AND RAILINGS TO BE DEMOLISHED AND REMOVED IN THEIR ENTIRETY.

45 CONCRETE STAIRS AND ASSOCIATED WALLS, FOUNDATIONS, AND RAILINGS TO BE DEMOLISHED AND REMOVED IN THEIR ENTIRETY.

46 (E) CONC. BENCH TO BE SAW CUT AND DEMO 1'-9 3/8" FROM EDGE. SEE ENLARGED PLANS FOR MORE INFO.

ENGINEERING
CITY OF LOS ANGELES

DEPARTMENT OF PUBLIC WORKS
BUREAU OF ENGINEERING

NO.	REVISION DESCRIPTION	DATE	BY

BUILDING NO. -
INDEX NO. RP-300118



GARY LEE MOORE, PE, ENV SP
CITY ENGINEER
ARCHITECTURAL DIVISION
ARCHITECT/ENGINEER: JOHN SPARANO LIC. NO.: C-26244
DESIGNED BY: SPARANO + MOONEY ARCHITECTURE
DRAWN BY: JORGE BELTRAN
CHECKED BY: LUDWING JUAREZ
APPROVED BY:
DATE: 03/03/20 (x5)

CITY OF LOS ANGELES
VERTICAL CONTROL:
HORIZONTAL CONTROL:
SHEET TITLE: DEMOLITION PLAN
PROJECT: GRANADA HILLS POOL AND BATHHOUSE REPLACEMENT PROJECT
ADDRESS: 16730 CHATSWORTH STREET GRANADA HILLS, CA 91344

BID SET
PROJECT ISSUE DATE: 06/22/21

WORK ORDER NO. #E170517
PLAN FILE NO. #308
DRAWING NO. A2.00
SHEET OF SHEETS

PLOTTED:8/18/2020 1:19:34 PM

THE CITY OF LOS ANGELES OR ITS OFFICERS OR AGENTS SHALL NOT BE RESPONSIBLE FOR THE ACCURACY OR COMPLETENESS OF ELECTRONIC COPIES OF THIS PLAN SHEET.

TTLB TEMPLATE REVISION DATE: 02/2013
SHEET ISSUE DATE: 22 NOV 2017
FILE PATH: BIM 360://Granada Hills Pool Renovation/A_Granada-Hills_2017.rvt

REVISION DATES (DESIGN STAGE ONLY)

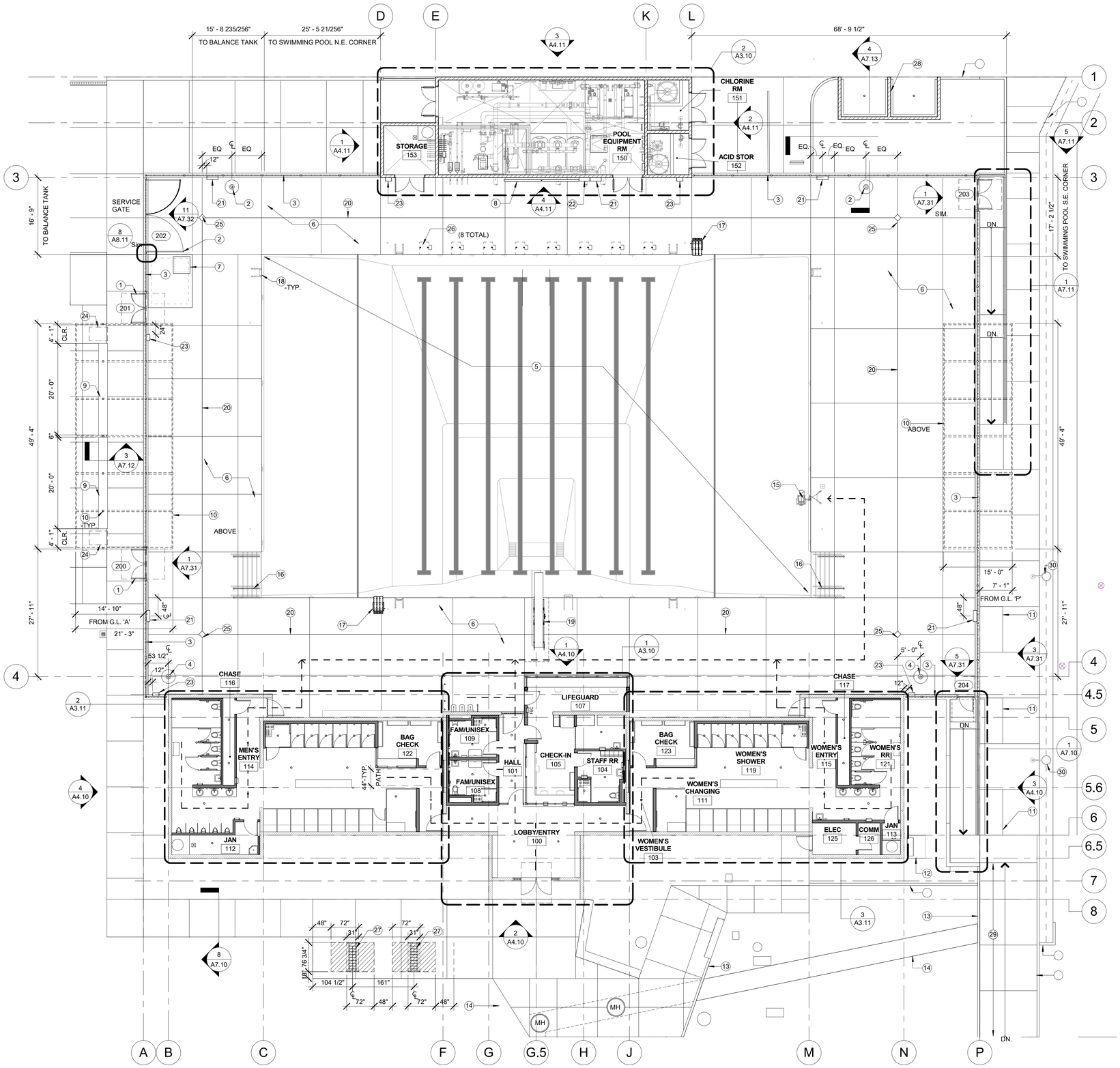

1 FACILITY FLOOR PLAN
3/32" = 1'-0"

GENERAL NOTES

1. ALL DIMENSIONS TO BE VERIFIED IN FIELD.
2. SEE SHEET A7.00 FOR WALL TYPE INFO.
3. SEE ACCESSORY KEYNOTES ON INTERIOR ELEVATIONS SHEETS AND SPECS FOR FURTHER ACCESSORY INFO.
4. SEE SHEET A3.12 FOR TOILET STALLS AND ACCESSORIES INFORMATION.
5. SEE SHEET G0.40 FOR ACCESSORY SCHEDULE AND MOUNTING DIAGRAMS.
6. SEE SHEETS G0.40 AND G0.41 FOR ACCCESSIBILITY NOTES AND DIAGRAMS.
7. S.S.D. FOR ADDITIONAL NEW WALL INFO.
8. ALL NEW INTERIOR CONCRETE SLABS TO BE SEALED AND RECEIVE NEW COLOR TREATMENT U.N.O. FINISH TO BE MEDIUM BROOM FINISH. CONTRACTOR TO PROVIDE MOCK-UPS OF MEDIUM AND HEAVY FINISH
9. ALL FLOOR SLOPES TO DRAIN TO BE MINIMUM 1% SLOPE AND NOT TO EXCEED 2% IN ANY DIRECTION-TYP.
10. FIRE DEPARTMENT OCCUPANCY SIGNAGE TO DISPLAY TOTAL BATHHOUSE OCCUPANTS. ADDITIONAL SIGNAGE AS SHOWN TO BE PROVIDED BY CONTRACTOR.
11. ALL CABINETRY TO BE SOLID PHENOLIC WITH STAINLESS STEEL HARDWARE.
12. FOR PIPING PENETRATION THROUGH RATED WALLS SEE DETAIL 12/A7.50.
13. ALL EXPOSED METAL TO RECEIVE ANTI CORROSIVE COATING.
14. ALL CHANGING STALLS TO RECEIVE NEW BOBRICL CLOTHES HOOK OR EQUAL.
15. SEE SHEET A2.16 FOR SLAB , CURB CONTROL PLAN, FLOOR DRAIN AND SLOPE DIRECTION.
16. SEE SHEET A2.16 FOR DEPRESS FLOOR AREAS FOR TILE INSTALLATION.
17. ALL WALLS INSIDE CHEMICAL ROOMS TO RECEIVE EPOXY SEALER FLOOR TO CEILING.
18. S.AQ.D. FOR ADDITIONAL MECHANICAL BUILDING INFO.
19. SEE SHEET A1.10 FOR ADDITIONAL SITE INFO.
20. S.L.D. FOR LANDSCAPE INFO.
21. ALL RESTROOM FLOORS TO BE HARD, NON-ABSORBENT, SLIP RESISTANT, COVED AT LEAST 5" AND SLOPED ONE-QUARTER INCH PER FOOT TO FLOOR DRAINS.
22. SEE ENLARGED FLOOR PLANS SHEETS A3.10 & A3.11 FOR ADDITIONAL ADA ACCESS INFO.

GRAPHIC LEGEND

- (E) WALL TO REMAIN
- (N) STUD PARTITION, REF WALL TYPES
- (E) MASONRY WALL
- (N) MASONRY WALL
- ADA CLEARANCES SEE G0.40 FOR MORE INFO.
- ADA PATH OF TRAVEL 44" WIDTH AT INTERIOR OF BUILDING 48" WIDTH AT POOL DECK

KEYNOTE LEGEND

1 (N) TUBE STEEL GATE. SEE DOOR SCHEDULE SHEET A8.10 FOR MORE INFO.
2 NOT USED
3 (N) TUBE STEEL FENCE ON (N) 10" W CONC CURB, REF DETAILS.
4 (N) NEW LIGHT POLE, S.E.D. & MUSCO STRUCT. DWGS FOR MORE INFO.
5 (N) SWIMMING POOL. 9,110 S.F. S.AQ.D. SHEET SP-1 FOR MORE INFO.
6 (N) 6" CONC POOL DECK. FINISH TO BE MEDIUM BROOM FINISH.COBTRACTOR TO PROVIDE MOCK-UPS OF MEDIUM AND HEAVY FINISH.
7 (N) CONC. BALANCE TANK AND HATCH, FOR DIMENSIONS, REINFORCEMENT & HATCH INFO. SEE SHEET WP-4 AND STRUCT. DWGS.
8 (N) WALL MOUNTED SCOREBOARD UNDER SEPARATE PERMIT. S.AQ.D. & S.S.D. FOR MORE INFO.
9 (N) NEW CONCRETE BENCH.
10 (N) T.S. STRUCTURE FOR PHOTOVOLTAIC PANELS
11 (N) TREE WELL.S.L.D. FOR MORE INFO.
12 (E) IRRIGATION CONTROLLER BOX TO REMAIN AND BE PTROTECTED DURING CONSTRUCTION.SEE SHEETS L-0.20 AND CD1.01 FOR MORE INFO.
13 (N) CONCRETE CURB. S.C.D. FOR MORE INFO.
14 (N) CONC. V-GUTTER & ASSOCIATED MOWSTRIPS, S.C.D. FOR MORE INFO.
15 (N) ADA LIFT. S.AQ.D. FRO MORE INFO.S
16 (N) POOL STEPS AND HANDRAIL. S.AQ.D. FOR MORE INFO.
17 (N) LIFEGUARD CHAIR. S.AQ.D. FOR MORE INFO.
18 (N) GRABRAIL WITH STEPS. S.AQ.D.. FOR MORE INFO.
19 (N) 1M DIVING BOARD.W/ THICKENED SLAB, SEE DETAIL 1/SP-9 FOR MORE INFO.
20 (N) SLOT DRAIN LOCATION, S.C.D. FOR MORE INFO.
21 (N) UNDERWATER LIGHTING JUNCTION BOX CONC. PEDESTAL. S.AQ.D. FOR SIZE & REINFORCEMENT. IT IS ACCEPTABLE TO RECESS BOX WITHIN AN ADJACENT NEW BUILDING WALL, G.C. RESPONSIBLE FOR COORDINATING ALL COMPONENTS.
22 (N) SCOREBOARD TIMING SYSTEM JUNCTION BOX CONC. PEDESTAL. S.AQ.D. FOR SIZE & REINFORCEMENT. IT IS ACCEPTABLE TO RECESS BOX WITHIN AN ADJACENT NEW BUILDING WALL, G.C. RESPONSIBLE FOR COORDINATING ALL COMPONENTS.
23 (N) HOSE BIBB CONC. PEDESTAL, S.AQ.D. FOR SIZE & REINFORCEMENT. IT IS ACCEPTABLE TO RECESS BOX WITHIN AN ADJACENT NEW BUILDING WALL, G.C. RESPONSIBLE FOR COORDINATING ALL COMPONENTS.
24 (N) 36"X 48"MIN. WHEELCHAIR SPACE PER CBC SECTION 11B-802.1.
25 (N) SLOT DRAIN SYSTEM CATCH BASIN.SEE SHEET SP-14. S.AQ.D. AND S.C.D. FOR MORE INFO
26 (N) STARTING BLOCKS. S.AQ.D. FOR LOCATION. SEE DETAIL 3/SP-8 FOR MORE INFO. STARTING BLOCKS MUST BE REMOVED AND STORED WHEN USED BY GENERAL PUBLIC. S.AQ.D. FOR MORE INFO.
27 (N) 8-BIKE CAPACITY SINGLE BIKE RACK PER LAMC 12.21A4. SEE SHEET SEE PARKING REQUIREMENTS NOTES ON SHEET G0.21 FO RMORE INFO.
28 (N) TRASH AND RECYCLING ENCLOSURE. SEE SHEET A7.13 FOR MORE INFO. S.S.D.
29 (N) CONCRETE WALK. 5% MAX. SLOPE S.C.D.
30 (E) LIGHT POLE TO BE PROTECTED IN PLACE DURING CONSTRUCTION, PROVIDE A NEW CONC. FIN. BASE & METAL BASE COVER FROM IMPERIAL POLES L.A.

ENGINEERING
CITY OF LOS ANGELES

BUREAU OF ENGINEERING

NO.	REVISION DESCRIPTION	DATE	BY

BUILDING NO. -
INDEX NO. RP-300118

LICENSED ARCHITECT
JOHN P. SPARANO
No. C-26244
EXP. 1-30-21
STATE OF CALIFORNIA

BUREAU OF ENGINEERING
OFFICIAL RECORD

DEPARTMENT OF PUBLIC WORKS
CITY OF LOS ANGELES

GARY LEE MOORE, PE, ENV SP
CITY ENGINEER

		DATE:
ARCHITECTURAL DIVISION		
ARCHITECT/ENGINEER:	JOHN SPARANO	LIC. NO.: C-26244
DESIGNED BY:	SPARANO + MOONEY ARCHITECTURE	03/03/20
DRAWN BY:	JORGE BELTRAN	03/03/20
CHECKED BY:	LUDWING JUAREZ	03/03/20
APPROVED BY:	JOHN SPARANO	03/03/20

VERTICAL CONTROL:
HORIZONTAL CONTROL:

SHEET TITLE: FACILITY FLOOR PLAN

PROJECT: GRANADA HILLS POOL AND BATHHOUSE REPLACEMENT PROJECT
ADDRESS: 16730 CHATSWORTH STREET GRANADA HILLS, CA 91344

BID SET
PROJECT ISSUE DATE: 06/22/21
CITY OF LOS ANGELES

WORK ORDER NO. #E170517
PLAN FILE NO. #308
DRAWING NO. A2.10
SHEET 0 OF SHEETS

PLOTTED:8/18/2020 1:19:42 PM

THE CITY OF LOS ANGELES OR ITS OFFICERS OR AGENTS SHALL NOT BE RESPONSIBLE FOR THE ACCURACY OR COMPLETENESS OF ELECTRONIC COPIES OF THIS PLAN SHEET.

FILE PATH: BIM 360://Granada Hills Pool Renovation/A_Granada-Hills_2017.rvt

TTLB TEMPLATE REVISION DATE: 02/2013
SHEET ISSUE DATE: 02/01/2020

REVISION DATES (DESIGN STAGE ONLY)

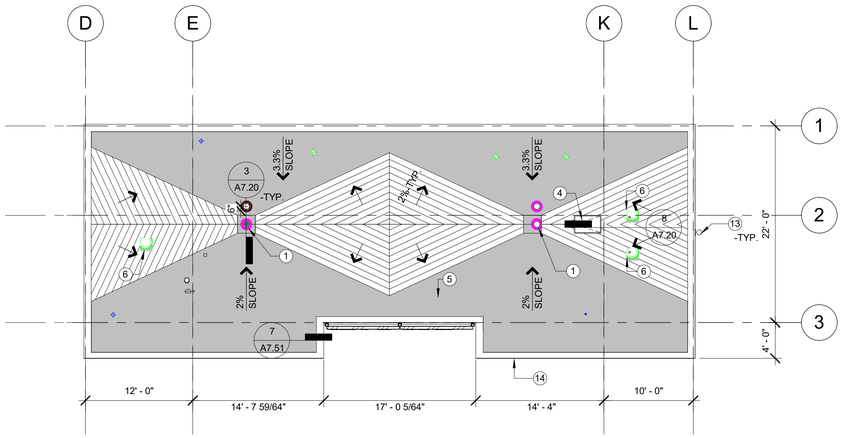

2 POOL EQUIP BLDG ROOF PLAN
1/8" = 1'-0"

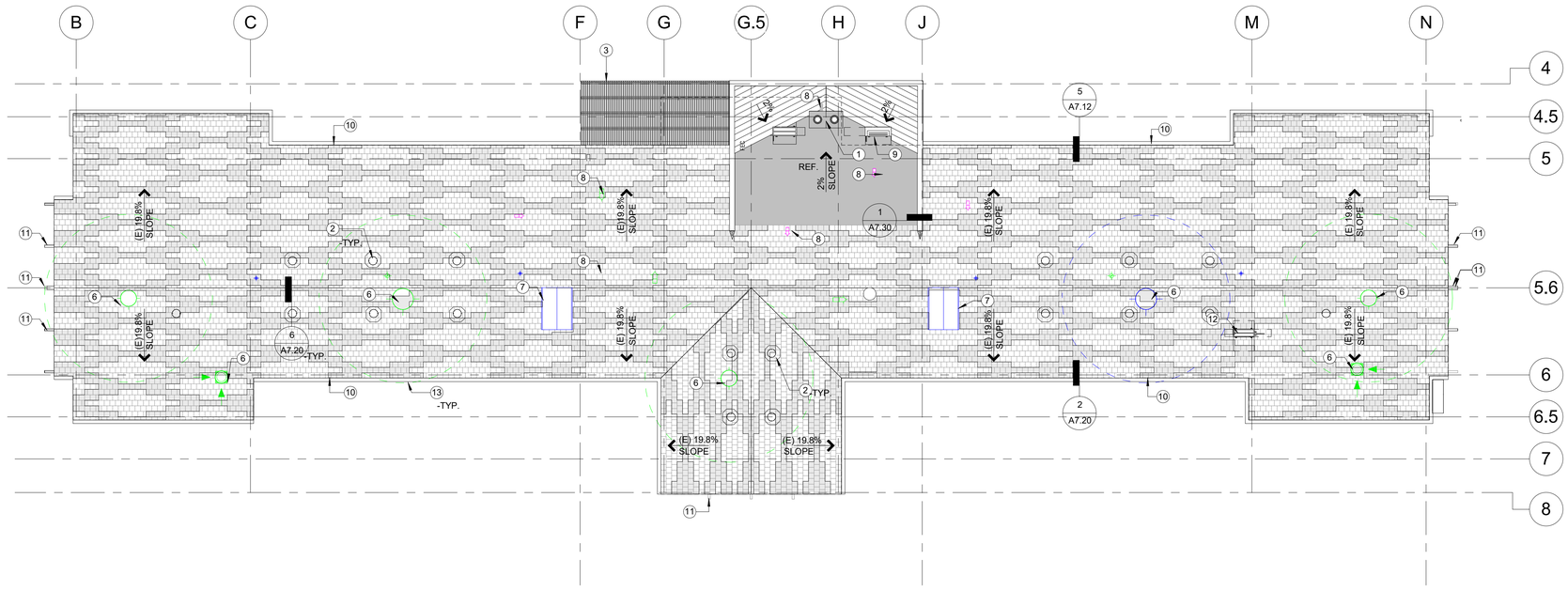

1 BATHHOUSE ROOF PLAN
1/8" = 1'-0"

GENERAL NOTES

1. ROOF TYPES ARE AS FOLLOWS:
   - ROOF TYPE 1: SINGLE-PLY SYSTEM "CLASS-A" TPO UL--790
   - ROOF TYPE 2: ASPHALT SHINGLE SYSTEM "CLASS-A" ASTM E108/UL 790
2. ALL SINGLE-PLY ROOFING TO SLOPE 1/4" VERTICAL PER 1'-0" HORIZONTAL MINIMUM UNLESS NOTED OTHERWISE.
3. TOP OF INSULATION HEIGHTS, HIGH POINTS AND LOW POINT, ARE INDICATED AS THE TOP OF ROOF SURFACE ABOVE ROOF DRAIN(S).
4. REFER TO SHEET A7.20 FOR TYPICAL ROOF DETAILS.
5. ALL ROOF TOP MECHANICAL, ELECTRICAL, AND/OR PLUMBING EQUIPMENT SHOWN FOR INFORMATION ONLY. REFERENCE MECHANICAL, ELECTRICAL, AND PLUMBING DOCUMENTS AND SPECIFICATIONS FOR SPECIFIC DESIGN INFORMATION. REFERENCE ROOF DETAILS FOR ROOF PENETRATIONS DETAILS AND OTHER SYSTEMS INFORMATION.
6. PROVIDE WALKWAY PROTECTION TO MAJOR MECHANICAL, ELECTRICAL AND PLUMBING EQUIPMENT AS REQUIRED TO PROVIDE SERVICE ACCESS. WALKWAY PROTECTION IS INDICATED AS A GENERAL LAYOUT AND MAY NOT SHOW ALL FINAL LOCATIONS OF ALL EQUIPMENT.
7. FOR PIPING PENETRATION THROUGH RATED WALLS SEE DETAIL 10/A7.50.
8. S.P.D. FOR VENT THRU ROOF PIPING INFORMATION.
9. ALL NEW ROOF TO BE CLASS A.
10. UNIT SKYLIGHTS SHALL BE LABELED BY AN LA CITY APPROVED LABELING AGENCY. SUCH LABEL SHALL STATE THE APPROVED LABELING AGENCY NAME, PRODUCT DESIGNATION AND PERFORMANCE GRADE RATING (RESEARCH REPORT NOT REQUIRED) 2405.5

GRAPHIC LEGEND

- INDICATES ROOF AREA WHERE SLOPE IS ACHIEVED BY TAPERED INSULATION
- INDICATES CRICKET AREA (HATCH PERPENDICULAR TO SLOPE DIRECTION) 2% MIN. SLOPE
- (N) ASPHALT SHINGLE ROOF ON (N) PLYWOOD ROOF DECK
- ROOF DRAIN (WITH OVERFLOW DRAIN)
- SLOPE DIRECTION ARROW
- WALKWAY PROTECTION

KEYNOTE LEGEND

1 (N) ROOF DRAIN AND OVERFLOW SYSTEM.
2 (N) SKYLIGHT, TYP.
3 (N) STEEL SHADE STRUCTURE. PAINT PER SCHEDULE.
4 (N) ROOF HATCH PERMANENT FIXED ACCESS LADDER.
5 (N) THERMOPLASTIC TPO WALKWAY PAD.
6 (N) ROOF EXHAUST FAN. S.M.D. FOR MORE INFO.
7 (N) MAKE-UP AIR INTAKE ROOF VENTILATOR. S.M.D. FOR MORE INFO.
8 (N) 4" DIAMETER GOOSENECK OUTSIDE AIR INTAKE. S.M.D. FOR MORE INFO.
9 (N) SPLIT USYSTEM OUTDOOR HEAT PUMP UNIT. S.M.D. FOR MORE INFO.
10 (N) MTL. GUTTER.
11 (E) BEAM TO BE REPAIRED AND OR PARTIALLY REPLACED. SEE WOOD FRAMING INSPECTION REPORT INCLUDED IN SPECS FOR MORE INFO.
12 (N) CONDENSING UNIT. S.M.D. FOR MORE INFO.
13 (N) LIGHT FIXTURE. S.E.D.
14 (N) MECHANICAL BUILDING ROOF OVERHANG. SEE WALL SECTION A6.10 SHEET FOR MORE INFO.

BUREAU OF ENGINEERING
OFFICIAL RECORD

ROOFING NOTES

1. (N) ASPHALT SHINGLES TO ALTERNATE COLOR IN A DIAMOND PATTERN USING COLORS SIMILAR TO ONES PROVIDED BY OWENS CORNING.
2. G.C. TO PROVIDE SAMPLES FOR APPROVAL.
3. ASPHALT SHINGLES TO COMPLY WITH U.L. CLASS 'A' RATING.
4. SEE FIN. LEGEND FOR MORE INFO.

- RF-01 "SAND CASTLE" OR APPROVED EQ.
- RF-02 "SHASTA WHITE" OR APPROVED EQ.

ENGINEERING
CITY OF LOS ANGELES

BUREAU OF ENGINEERING

NO.	REVISION DESCRIPTION	DATE	BY

BUILDING NO. -
INDEX NO. RP-300118

JOHN P. SPARANO
No. C-28244
EXP. 9-30-21
STATE OF CALIFORNIA
CIVIL

DEPARTMENT OF PUBLIC WORKS
CITY OF LOS ANGELES

GARY LEE MOORE, PE, ENV SP
CITY ENGINEER

		DATE:
ARCHITECTURAL DIVISION		
ARCHITECT/ENGINEER:	JOHN SPARANO	LIC. NO.: C-28244
DESIGNED BY:	SPARANO + MOONEY ARCHITECTURE	03/03/20
DRAWN BY:	JORGE BELTRAN	03/03/20
CHECKED BY:	LUDWING JUAREZ	03/03/20
APPROVED BY:		03/03/20

VERTICAL CONTROL:
HORIZONTAL CONTROL:
SHEET TITLE: ROOF PLANS
PROJECT: GRANADA HILLS POOL AND BATHHOUSE REPLACEMENT PROJECT
ADDRESS: 16730 CHATSWORTH STREET GRANADA HILLS, CA 91344

BID SET
PROJECT ISSUE DATE: 06/22/21
CITY OF LOS ANGELES

WORK ORDER NO. #E170517
PLAN FILE NO. #308
DRAWING NO. A2.11
SHEET OF SHEETS

PLOTTED:8/18/2020 1:19:54 PM

THE CITY OF LOS ANGELES OR ITS OFFICERS OR AGENTS SHALL NOT BE RESPONSIBLE FOR THE ACCURACY OR COMPLETENESS OF ELECTRONIC COPIES OF THIS PLAN SHEET.

TTLB TEMPLATE REVISION DATE: 02/2013
SHEET ISSUE DATE: 01/04/18
FILE PATH: BIM 360://Granada Hills Pool Renovation/A_Granada-Hills_2017.rvt

REVISION DATES (DESIGN STAGE ONLY)

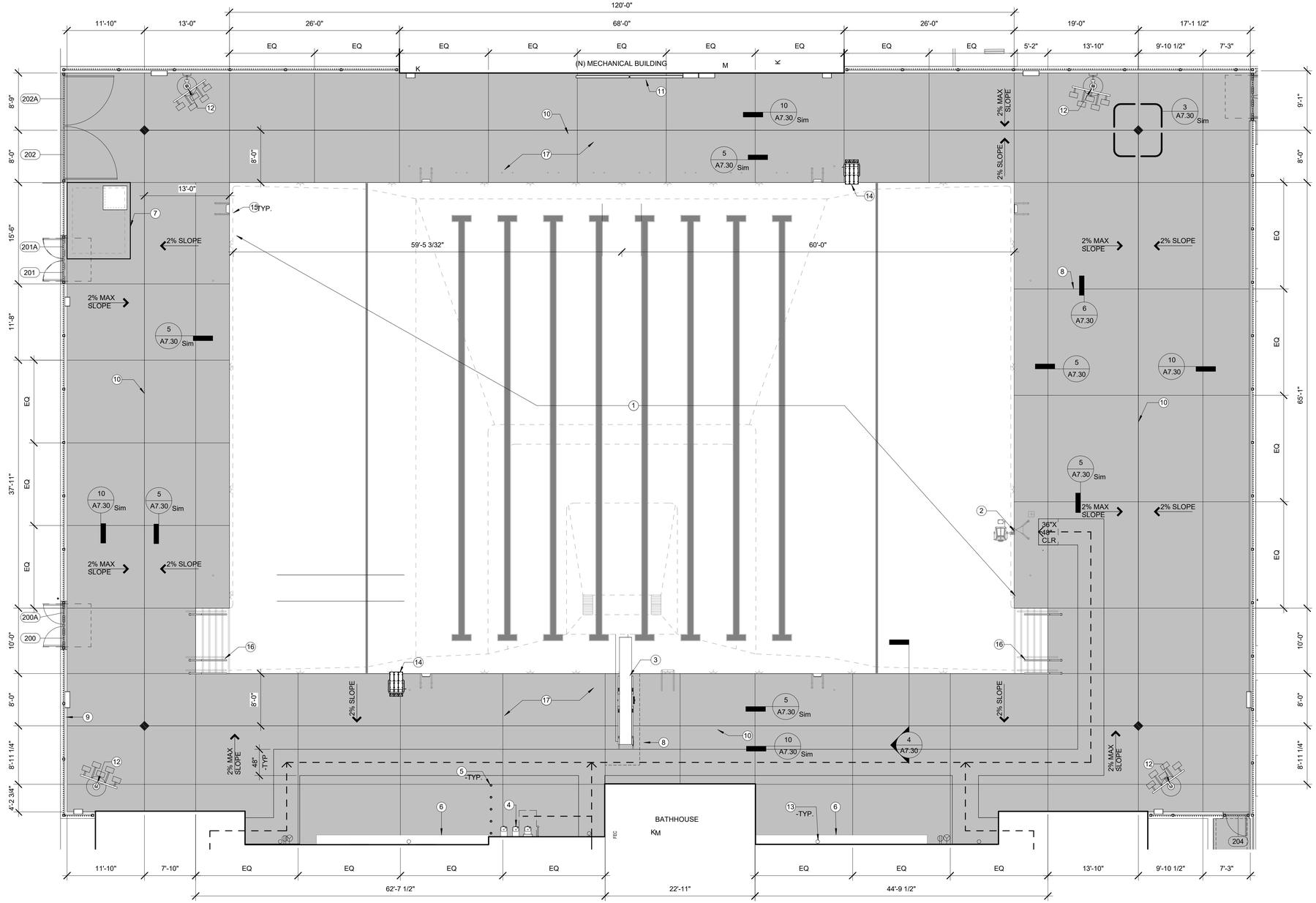

1 POOL DECK PLAN
1/8" = 1'-0"

GENERAL NOTES

1. CONCRETE TOOLED JOINTS TO BE 1/8" IN WIDTH BY 1 1/2" IN DEPTH, NO STEEL TROWELED, CONFORMING TO PROPER CONSTRUCTION PRACTICE DEPENDING ON CURE TIME AND WEATHER CONDITIONS. SEE POOL DECK PLAN FOR DIVISION LINES. S.S.D. AND SHEET A7.30 FOR MORE INFO.
2. CONTRACTOR IS TO PERFORM A FIELD OBSERVATION VERIFYING ALL DIMENSIONS WITH EXISTING FIELD CONDITIONS.
3. CONTRACTOR IS TO PROVIDE JOINT LAYOUT SHOP DRAWING SUBMITTAL FOR REVIEW PRIOR TO LAYING DOWN OF REBAR.
4. ALL DIMENSIONS TO BE VERIFIED IN FIELD.
5. S.C.D. FOR SPOT ELEVATIONS OF POOL DECK FOR PROPER DRAINAGE
6. S.C.D. FOR REQUIRED POOL DECK SLOPE.
7. S.C.D. FOR SLOT DRAIN LOCATIONS.
8. S.AQ.D. FOR ADDITIONAL POOL AND PIT INFORMATION.
9. S.AQ.D.. SHEET SP-1 FOR POOL DIMENSIONS AND DATA INFO.
10. S.S.D. FOR EXPANSION JOINTS INFO.
11. SEE SHEETS A2.13, A2.14 &AND A2.15 FOR SITE CONTROL JOINT INFORMATION
12. S.AQ.D. FOR LIFEGUARD CHAIR LOCATIONS
13. ALL NEW WALKING SURFACES SHALL BE STABLE, FIRM AND SLIP RESISTANT
14. SWIMMING POOLS TO COMPLY WITH SECTION 11B-1009
15. ADA LIFTS TO COMPLY WITH SECTION 11B-1009.2-11B-1009.2.8

GRAPHIC LEGEND

- INDICATES NEW CONCRETE SLAB
- INDICATES NEW TOOLED JOINT LINE
- INDICATES NEW SLOT DRAIN
- INDICATES NEW SLOT DRAIN CATCH BASIN
- SLOPE DIRECTION ARROW
- ACCESSIBLE ROUTE TO ADA LIFT

KEYNOTE LEGEND

1 (N) SWIMMING POOL. 9,110 S.F. S.AQ.D. SHEET SP-1 FOR MORE INFO.
2 (N) ADA ACCESSIBLE LIFT.S.AQ.D. FOR MORE INFO.
3 (N) 1M DIVING BOARD.W/ THICKENED SLAB. SEE DETAIL 1/SP-9 FOR MORE INFO.
4 (N) DRINKING FOUNTAINS (3) ON (E) BRICK WALL W/ (1) BOTTLE FILLING STATION.SEE DETAIL 1/A7.32. S.P.D. FOR MORE INFO.
5 (N) STEEL SHADE STRUCTURE. PAINT PER SCHEDULE.
6 (E) CONCRETE BENCH TO REMAIN, PROTECT.
7 (N) CONC. BALANCE TANK AND HATCH, FOR DIMENSIONS, REINFORCEMENT & HATCH INFO. SEE SHEET WP-4 AND STRUCT. DWGS.
8 (N) EXPANSION JOINT. S.S.D. FOR MORE INFO.
9 (N) 9'-6" H TUBE STEEL FENCE ON 6" H CONC CURB.
10 (N) SLOT DRAIN SYSTEM. S.C.D. AND S.AQ.D. FOR MORE INFO.
11 (N) WALL MOUNTED SCOREBOARD UNDER SEPARATE PERMIT. S.AQ.D. & S.S.D. FOR MORE INFO.
12 (N) NEW LIGHT POLE, S.E.D. & MUSCO STRUCT. DWGS FOR MORE INFO.
13 (N) LIGHT FIXTURE. S.E.D.
14 (N) LIFEGUARD CHAIR. S.AQ.D. FOR MORE INFO.
15 (N) GRABRAIL WITH STEPS. S.AQ.D.. FOR MORE INFO.
16 (N) POOL STEPS AND HANDRAIL. S.AQ.D. FOR MORE INFO.
17 (N) 6" CONC POOL DECK. FINISH TO BE MEDIUM BROOM FINISH.COBTRACTOR TO PROVIDE MOCK-UPS OF MEDIUM AND HEAVY FINISH.

BUREAU OF ENGINEERING
OFFICIAL RECORD

BUREAU OF ENGINEERING
CITY OF LOS ANGELES

NO.	REVISION DESCRIPTION	DATE	BY

BUILDING NO. -
INDEX NO. RP-300118

ENGINEER, ARCHITECT
JOHN P. SPARANO
No. C-26244
EXP. 1-30-21
STATE OF CALIFORNIA

DEPARTMENT OF PUBLIC WORKS
BUREAU OF ENGINEERING
CITY OF LOS ANGELES

GARY LEE MOORE, PE, ENV SP
CITY ENGINEER

		DATE:
ARCHITECTURAL DIVISION		
ARCHITECT/ENGINEER:	JOHN SPARANO	LIC. NO.: C-26244
DESIGNED BY:	SPARANO + MOONEY ARCHITECTURE	03/03/20
DRAWN BY:	JORGE BELTRAN	03/03/20
CHECKED BY:	LUDWING JUAREZ	03/03/20
APPROVED BY:		03/03/20

CITY OF LOS ANGELES
VERTICAL CONTROL:
HORIZONTAL CONTROL:
SHEET TITLE: CONTROL JOINT DECK PLAN
PROJECT: GRANADA HILLS POOL AND BATHHOUSE REPLACEMENT PROJECT
ADDRESS: 16730 CHATSWORTH STREET GRANADA HILLS, CA 91344

BID SET
PROJECT ISSUE DATE: 06/22/21

WORK ORDER NO. #E170517
PLAN FILE NO. #308
DRAWING NO. A2.12
SHEET OF SHEETS

PLOTTED:6/18/2020 1:20:02 PM

THE CITY OF LOS ANGELES OR ITS OFFICERS OR AGENTS SHALL NOT BE RESPONSIBLE FOR THE ACCURACY OR COMPLETENESS OF ELECTRONIC COPIES OF THIS PLAN SHEET.

TTLB TEMPLATE REVISION DATE: 02/2013
SHEET ISSUE DATE: 01/04/18
FILE PATH: BIM 360://Granada Hills Pool Renovation/A_Granada-Hills_2017.rvt

REVISION DATES (DESIGN STAGE ONLY)

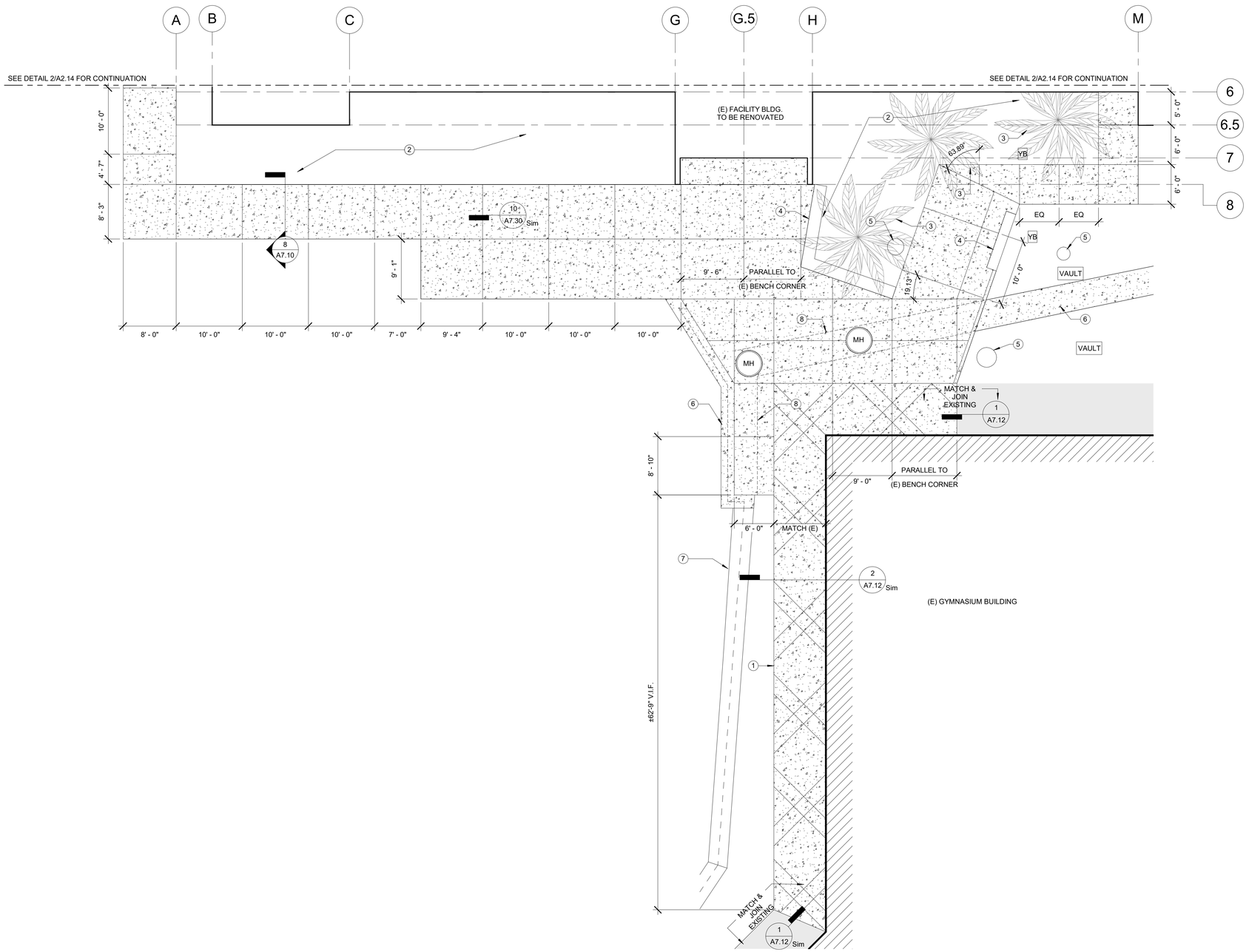

1 SITE CONTROL JOINT PLAN- ENTRY
1/8" = 1'-0"

GENERAL NOTES

1. SAW CUT CONTROL JOINT AT SHOWN DIMENSION. S.S.D. AND SHEET A7.30 FOR MORE INFO.
2. CONTRACTOR IS TO PERFORM A FIELD OBSERVATION VERIFYING ALL DIMENSIONS WITH EXISTING FIELD CONDITIONS.
3. CONTRACTOR IS TO PROVIDE JOINT LAYOUT SHOP DRAWING SUBMITTAL FOR REVIEW PRIOR TO LAYING DOWN OF REBAR.
4. ALL DIMENSIONS TO BE VERIFIED IN FIELD.
5. S.S.D. FOR EXPANSION JOINTS INFO.
6. S.C.D. FOR MORE INFO.
7. RAMPS SHALL COMPLY WITH CBC SECTION 11B-302. SEE SHEET G0.40 ACCESSIBLE ROUTE OF TRAVEL NOTES FOR ADDITIONAL INFO.

GRAPHIC LEGEND

- (E) HARDSCAPE TO BE PROTECTED
- (N) HARDSCAPE, S.C.D.
- (N) HARDSCAPE, PATTERN TO MATCH (E) S.C.D.
- MH — (E) MANHOLE, S.C.D. FOR MORE INFO.
- VAULT — (E) VAULT, S.C.D. FOR MORE INFO.
- YB — (E) YARD BOX, S.C.D. FOR MORE INFO.

KEYNOTE LEGEND

1 (N) CONCRETE SLAB TO MATCH (E) ADJACENT SLAB IN COLOR AND CONTROL JOINT PATTERN. S.S.D. AND S.C.D. FOR MORE INFO.
2 (E) PLANTER AREA TO BE RENOVATED. S.L.D. AND S.C.D. FOR MORE INFO.
3 (E) TREE TO REMAIN, TYP. PROTECT. S.L.D.
4 (E) CONC. BENCH TO REMAIN, BE SANDBLASTED, PATCHED AND BE PREPARED TO RECEIVE SKATEBOARD STOPPERS.SEE DETAIL 9/A7.10 SIM.FOR MORE INFO.
5 (E) BOULDER TO REMAIN. S.L.D. FOR MORE INFO.
6 (N) CONC. V-GUTTER & ASSOCIATED MOWSTRIPS, S.C.D. FOR MORE INFO.
7 (E) CONC. V-GUTTER TO REMAIN & BE PROTECTED,S.C.D. FOR MORE INFO.
8 (N) PARKWAY DRAIN BELOW (SHOWN DASH). VERIFY IN FIELD INVERT. S.C.D. FOR MORE INFO.

BUREAU OF ENGINEERING
OFFICIAL RECORD

N

THE CITY OF LOS ANGELES OR IT'S OFFICERS OR AGENTS SHALL NOT BE RESPONSIBLE FOR THE ACCURACY OR COMPLETENESS OF ELECTRONIC COPIES OF THIS PLAN SHEET.

REVISION DATES (DESIGN STAGE ONLY)

TTLB TEMPLATE REVISION DATE: 02/2013
SHEET ISSUE DATE: 11/06/18
FILE PATH: BIM 360://Granada Hills Pool Renovation/A_Granada-Hills_2017.rvt

BUREAU OF ENGINEERING
CITY OF LOS ANGELES

NO.	REVISION DESCRIPTION	DATE	BY

BUILDING NO. -
INDEX NO. RP-300118

JOHN P. SPARANO — LIC. NO. C-26244 — EXP. 4-30-21 — STATE OF CALIFORNIA

DEPARTMENT OF PUBLIC WORKS
CITY OF LOS ANGELES

GARY LEE MOORE, PE, ENV SP
CITY ENGINEER

		DATE:
ARCHITECTURAL DIVISION		
ARCHITECT/ENGINEER:	JOHN SPARANO LIC. NO.: C-26244	03/03/20
DESIGNED BY:	SPARANO + MOONEY ARCHITECTURE	03/03/20
DRAWN BY:	JORGE BELTRAN	03/03/20
CHECKED BY:	LUDWING JUAREZ	03/03/20
APPROVED BY:		03/03/20

VERTICAL CONTROL:
HORIZONTAL CONTROL:

SHEET TITLE: CONTROL JOINT SITE PLAN

PROJECT: GRANADA HILLS POOL AND BATHHOUSE REPLACEMENT PROJECT

ADDRESS: 16730 CHATSWORTH STREET GRANADA HILLS, CA 91344

BID SET
PROJECT ISSUE DATE: 06/22/21

WORK ORDER NO. #E170517
PLAN FILE NO. #308
DRAWING NO. A2.13
SHEET 0 OF SHEETS

PLOTTED:8/18/2020 1:20:07 PM

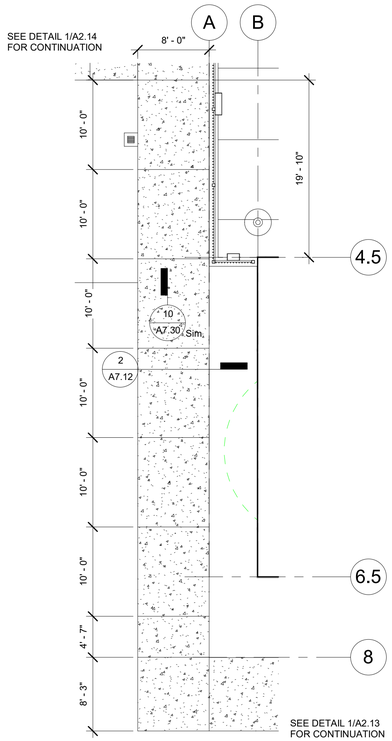

2 SITE CONTROL JOINT PLAN- NORTH EAST WALKWAY
1/8" = 1'-0"

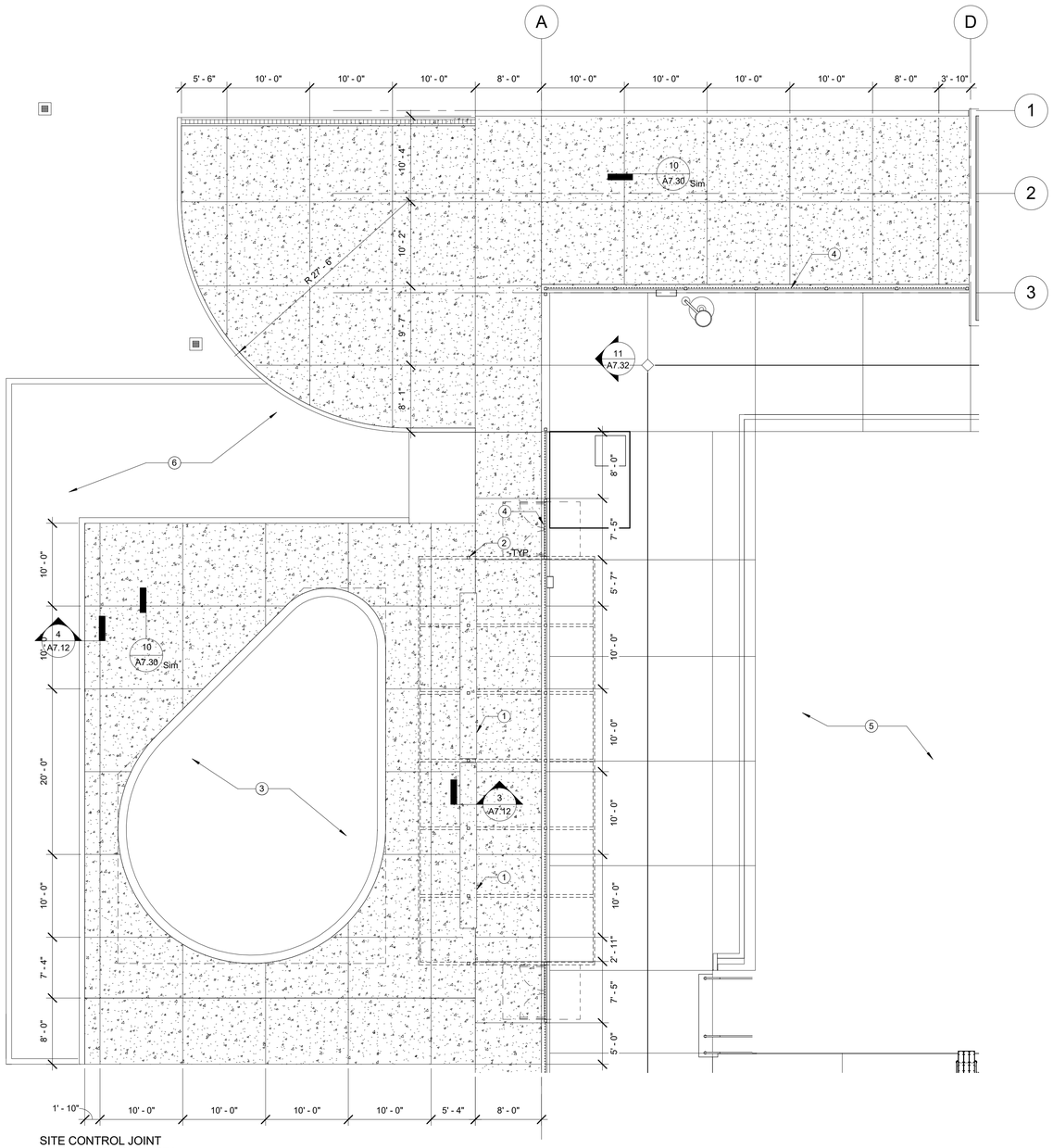

1 SITE CONTROL JOINT PLAN-SPLASHPAD AREA
1/8" = 1'-0"

GENERAL NOTES

1. SAW CUT CONTROL JOINT AT SHOWN DIMENSION. S.S.D. AND SHEET A7.30 FOR MORE INFO.
2. CONTRACTOR IS TO PERFORM A FIELD OBSERVATION VERIFYING ALL DIMENSIONS WITH EXISTING FIELD CONDITIONS.
3. CONTRACTOR IS TO PROVIDE JOINT LAYOUT SHOP DRAWING SUBMITTAL FOR REVIEW PRIOR TO LAYING DOWN OF REBAR.
4. ALL DIMENSIONS TO BE VERIFIED IN FIELD.
5. S.S.D. FOR EXPANSION JOINTS INFO.
6. S.C.D. FOR MORE INFO.
7. RAMPS SHALL COMPLY WITH CBC SECTION 11B-302. SEE SHEET G0.40 ACCESSIBLE ROUTE OF TRAVEL NOTES FOR ADDITIONAL INFO.

GRAPHIC LEGEND

(N) HARDSCAPE, S.C.D.

INDICATES NEW CONTROL JOINT LINE.

SLOPE ARROW

KEYNOTE LEGEND

1 (N) NEW CONCRETE BENCH.
2 (N) T.S. STRUCTURE FOR PHOTOVOLTAIC PANELS
3 (N) SPLASHPAD AREA. S.AQ.D. SHEET WP-1 FOR MORE INFO.
4 (N) 9'-6" H TUBE STEEL FENCE ON 6" H CONC CURB.
5 (N) SWIMMING POOL. 9,110 S.F. S.AQ.D. SHEET SP-1 FOR MORE INFO.
6 (N) PLANTER. S.L.D. FOR MORE INFO

BUREAU OF ENGINEERING
OFFICIAL RECORD

BID SET
PROJECT ISSUE DATE: 06/22/21

CITY OF LOS ANGELES

DEPARTMENT OF PUBLIC WORKS

BUREAU OF ENGINEERING

ENGINEERING
CITY OF LOS ANGELES

NO.	REVISION DESCRIPTION	DATE	BY

BUILDING NO. -

INDEX NO. RP-300118

LICENSED ARCHITECT
JOHN P. SPARANO
C-26244
EXP. 4-30-21
STATE OF CALIFORNIA

GARY LEE MOORE, PE, ENV SP
CITY ENGINEER
DATE:

ARCHITECT/ENGINEER:	JOHN SPARANO LIC. NO.: C-26244	03/03/20
DESIGNED BY:	SPARANO + MOONEY ARCHITECTURE	03/03/20
DRAWN BY:	JORGE BELTRAN	03/03/20
CHECKED BY:	LUDWING JUAREZ	03/03/20
APPROVED BY:		03/03/20

VERTICAL CONTROL:
HORIZONTAL CONTROL:

SHEET TITLE: CONTROL JOINT SITE PLAN

PROJECT: GRANADA HILLS POOL AND BATHHOUSE REPLACEMENT PROJECT

ADDRESS: 16730 CHATSWORTH STREET GRANADA HILLS, CA 91344

WORK ORDER NO. #E170517

PLAN FILE NO. #308

DRAWING NO. A2.14

SHEET OF SHEETS

PLOTTED:8/18/2020 1:20:11 PM

THE CITY OF LOS ANGELES OR ITS OFFICERS OR AGENTS SHALL NOT BE RESPONSIBLE FOR THE ACCURACY OR COMPLETENESS OF ELECTRONIC COPIES OF THIS PLAN SHEET.

REVISION DATES (DESIGN STAGE ONLY)

TTLB TEMPLATE REVISION DATE: 02/2013
SHEET ISSUE DATE: 11/06/18
FILE PATH: BIM 360://Granada Hills Pool Renovation/A_Granada-Hills_2017.rvt

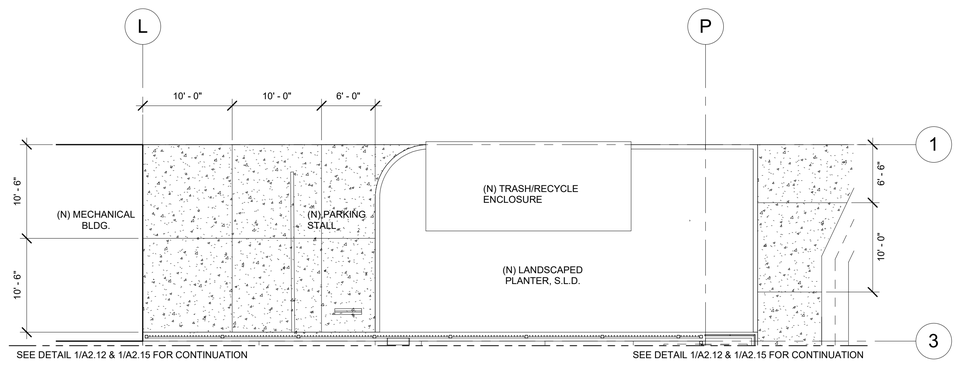

2 SITE CONTROL JOINT PLAN- WEST
1/8" = 1'-0"

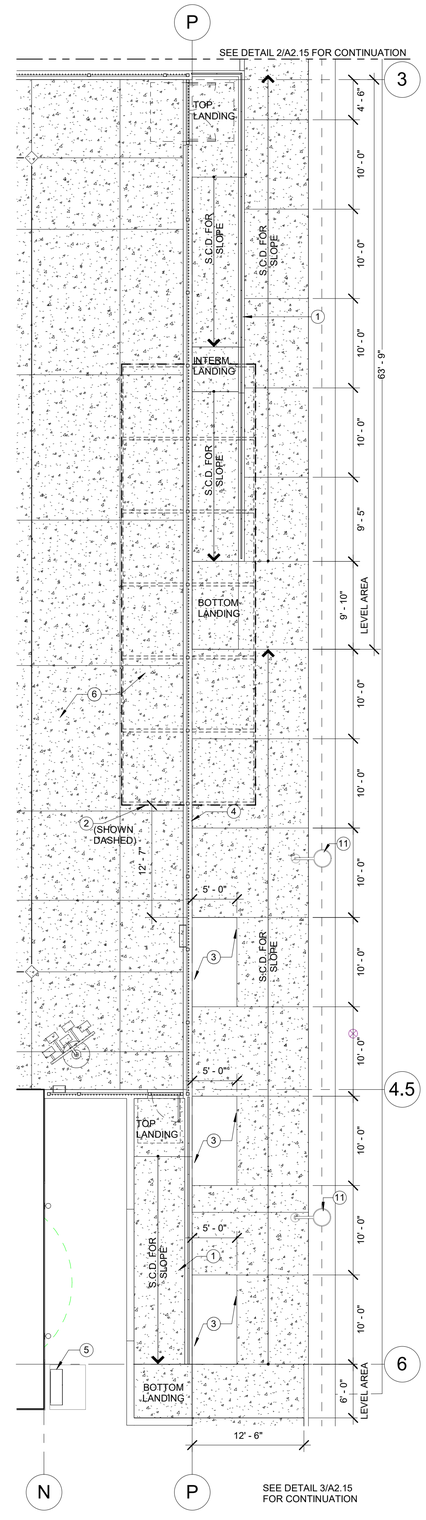

1 SITE CONTROL JOINT PLAN- SOUTH WALKWAY
1/8" = 1'-0"

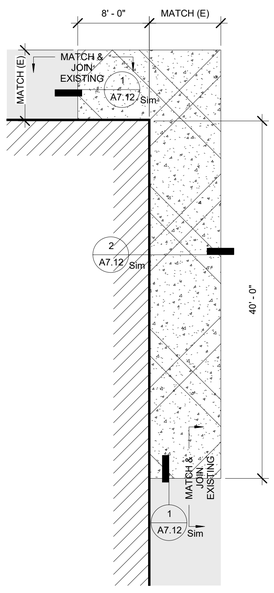

4 SITE CONTROL JOINT PLAN- GYM
1/8" = 1'-0"

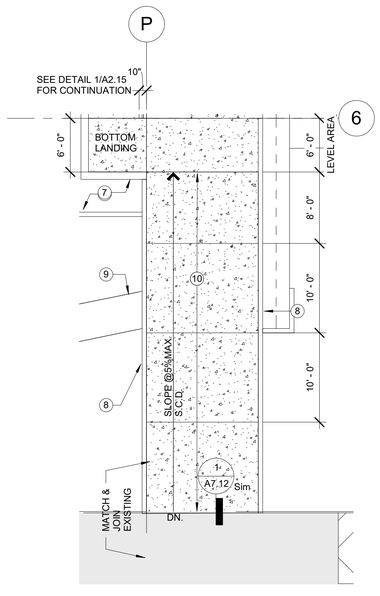

3 SITE CONTROL JOINT PLAN-SOUTH WALKWAY (CONT.)
1/8" = 1'-0"

GENERAL NOTES

1. SAW CUT CONTROL JOINT AT SHOWN DIMENSION. S.S.D. AND SHEET A7.30 FOR MORE INFO.
2. CONTRACTOR IS TO PERFORM A FIELD OBSERVATION VERIFYING ALL DIMENSIONS WITH EXISTING FIELD CONDITIONS.
3. CONTRACTOR IS TO PROVIDE JOINT LAYOUT SHOP DRAWING SUBMITTAL FOR REVIEW PRIOR TO LAYING DOWN OF REBAR.
4. ALL DIMENSIONS TO BE VERIFIED IN FIELD.
5. S.S.D. FOR EXPANSION JOINTS INFO.
6. S.C.D. FOR MORE INFO.
7. RAMPS SHALL COMPLY WITH CBC SECTION 11B-302. SEE SHEET G0.40 ACCESSIBLE ROUTE OF TRAVEL NOTES FOR ADDITIONAL INFO.

GRAPHIC LEGEND

(N) HARDSCAPE, S.C.D.

INDICATES NEW CONTROL JOINT LINE.

SLOPE ARROW

KEYNOTE LEGEND

1 (N) CONCRETE RAMP. S.C.D.
2 (N) TUBE STEEL AND METAL DECK SHADE STRUCTURE W/ SOLAR PANELS.SEE STRUCTRAL SHEET S3.02 FOR MORE INFO.
3 (N) TREE WELL.S.L.D. FOR MORE INFO.
4 (N) 9'-6" H TUBE STEEL FENCE ON 6" H CONC CURB.
5 (E) IRRIGATION CONTROLLER BOX TO REMAIN AND BE PTROTECTED DURING CONSTRUCTION.SEE SHEETS L-0.20 AND CD1.01 FOR MORE INFO.
6 (N) POOL DECK. SEE SHEET A2.12. S.AQ.D. AND S.C.D. FOR MORE INFO
7 (N) PLANTER BED W/ RETAINING WALL/CURB. S.C.D AND S.L.D.
8 (N) CONCRETE CURB. S.C.D. FOR MORE INFO.
9 (N) CONC. V-GUTTER & ASSOCIATED MOWSTRIPS, S.C.D. FOR MORE INFO.
10 (N) CONCRETE WALK. 5% MAX. SLOPE S.C.D.
11 (E) LIGHT POLE TO BE PROTECTED IN PLACE DURING CONSTRUCTION, PROVIDE A NEW CONC. FIN. BASE & METAL BASE COVER FROM IMPERIAL POLES L.A.

BUREAU OF ENGINEERING

ENGINEERING
CITY OF LOS ANGELES

NO.	REVISION DESCRIPTION	DATE	BY

BUILDING NO. -

INDEX NO. RP-300118

LICENSED ARCHITECT
JOHN P. SPARANO
No. C-26244
EXP. 1-30-21
STATE OF CALIFORNIA

BUREAU OF ENGINEERING
OFFICIAL RECORD

DEPARTMENT OF PUBLIC WORKS
CITY OF LOS ANGELES

GARY LEE MOORE, PE, ENV SP
CITY ENGINEER
DATE: 03/03/20

ARCHITECTURAL DIVISION
ARCHITECT/ENGINEER: JOHN SPARANO LIC. NO.: C-26244
DESIGNED BY: SPARANO + MOONEY ARCHITECTURE
DRAWN BY: JORGE BELTRAN
CHECKED BY: LUDWING JUAREZ
APPROVED BY:

VERTICAL CONTROL:
HORIZONTAL CONTROL:

SHEET TITLE: CONTROL JOINT SITE PLAN

PROJECT: GRANADA HILLS POOL AND BATHHOUSE REPLACEMENT PROJECT
ADDRESS: 16730 CHATSWORTH STREET GRANADA HILLS, CA 91344

BID SET
PROJECT ISSUE DATE: 06/22/21

WORK ORDER NO. #E170517
PLAN FILE NO. #308
DRAWING NO. A2.15
SHEET 0 OF SHEETS

PLOTTED:8/18/2020 1:20:17 PM

THE CITY OF LOS ANGELES OR ITS OFFICERS OR AGENTS SHALL NOT BE RESPONSIBLE FOR THE ACCURACY OR COMPLETENESS OF ELECTRONIC COPIES OF THIS PLAN SHEET.

TTLB TEMPLATE REVISION DATE: 02/2013
SHEET ISSUE DATE: 11/06/18
FILE PATH: BIM 360://Granada Hills Pool Renovation/A_Granada-Hills_2017.rvt

REVISION DATES (DESIGN STAGE ONLY)

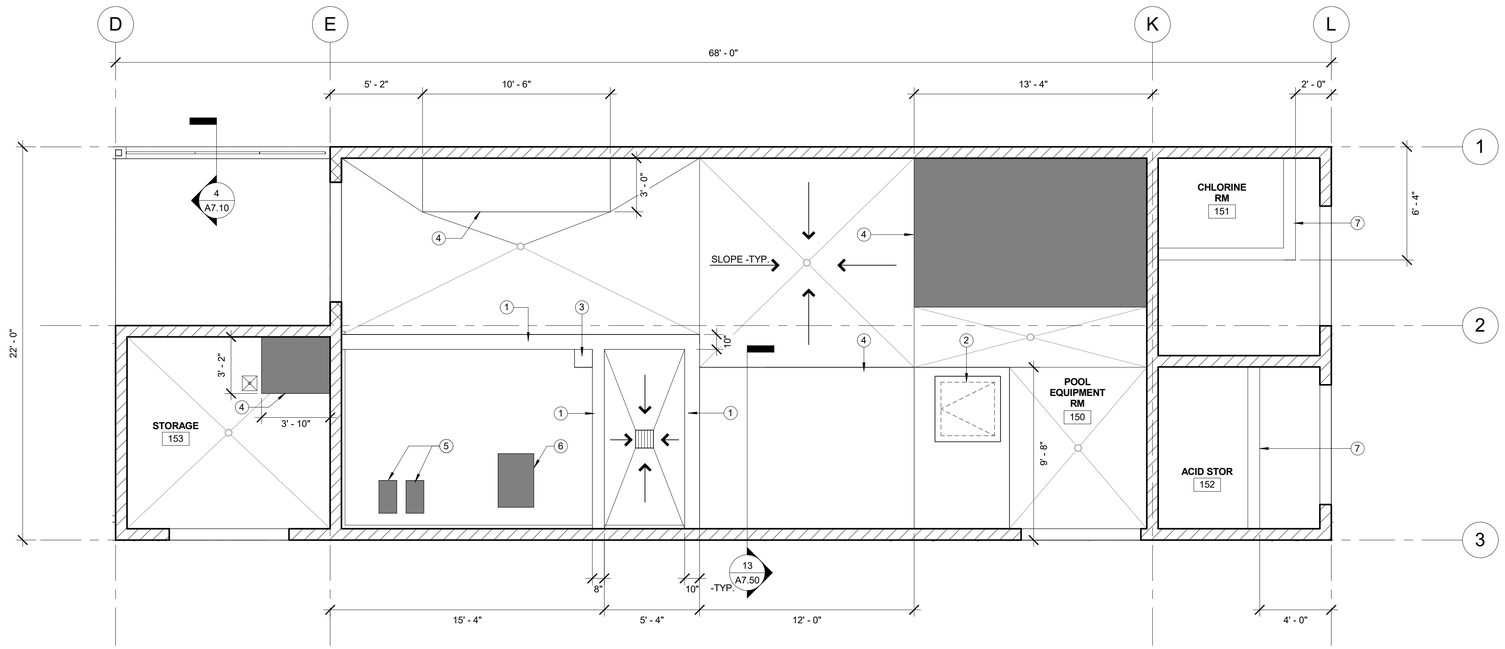

2 SLAB & CURB CONTROL PLAN
MECHANICAL BLDG.
1/4" = 1'-0"

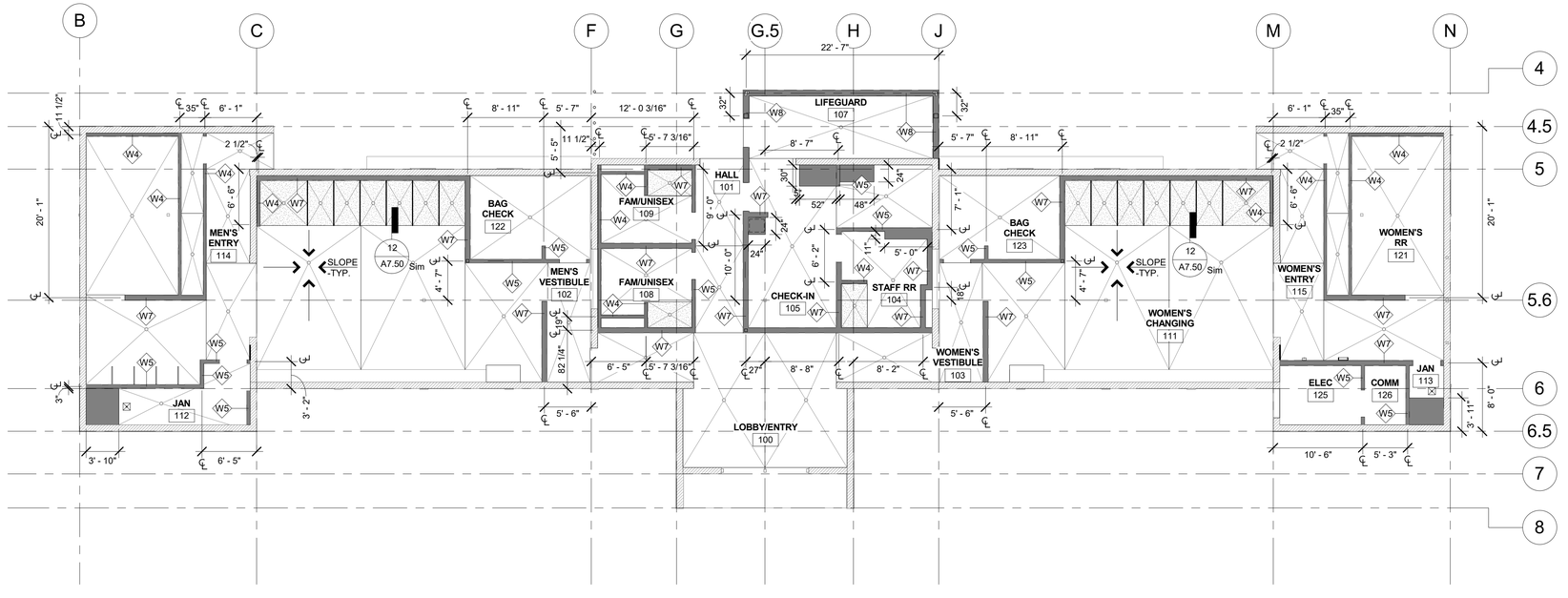

1 SLAB AND CURB CONTROL PLAN
1/8" = 1'-0"

GENERAL NOTES

1. ALL DIMENSIONS TO BE VERIFIED IN FIELD.
2. SEE SHEET A7.00 FOR WALL TYPE INFO...
3. S.S.D. FOR ADDITIONAL NEW WALL INFO.
4. ALL NEW INTERIOR CONCRETE SLABS TO BE SEALED AND RECEIVE NEW COLOR TREATMENT U.N.O. FINISH TO BE MEDIUM BROOM FINISH. CONTRACTOR TO PROVIDE MOCK-UPS OF MEDIUM AND HEAVY FINISH
5. ALL FLOOR SLOPES TO DRAIN TO BE MINIMUM 1% SLOPE AND NOT TO EXCEED 2% IN ANY DIRECTION-TYP.
6. ALL CABINETRY TO BE SOLID PHENOLIC WITH STAINLESS STEEL HARDWARE.
7. FOR PIPING PENETRATION THROUGH RATED WALLS SEE DETAILXXXX
8. ALL WALLS INSIDE CHEMICAL ROOMS TO RECEIVE EPOXY SEALER FLOOR TO CEILING.
9. S.AQ.D. FOR ADDITIONAL MECHANICAL BUILDING INFO.

GRAPHIC LEGEND

- (E) STUD WALL TO REMAIN
- (E) MASONRY WALL TO REMAIN
- (N) CONC CURB/EQUIP PAD
- (N) WALL ABOVE CURB SHOWN DASHED
- (N) SLAB RECESS
- (N) FLOOR DRAIN, S.P.D.
- (N) AREA FLOOR DRAIN, S.AQ.D. AND S.P.D.
- 1% MIN. TO 2% MAX. SLOPE-TYP.

KEYNOTE LEGEND

1 (N) PIT CONCRETE CURB. S.AQ.D. AND S.S.D. FOR MORE INFO
2 (N) SURGE CHAMBER ACCES HATCH. S.AQ.D. FOR MORE INFO.
3 (N) 12"x12"x12"D SUMP PIT, S.S.D. AND S.AQ.D. FOR MORE INFO. VERIFY LOCATION IN FIELD.
4 (N) 6" CONC. EQUIPMENT PAD. S.S.D. AND S.AQ.D. FOR MORE INFO.
5 (N) 22"x12"x16"H CONC. EQUIPMENT PAD. S.S.D. AND S.AQ.D. FOR MORE INFO. VERIFY LOCATION IN FIELD.
6 (N) 36"x24"x16"H CONC. EQUIPMENT PAD. S.S.D. AND S.AQ.D. FOR MORE INFO. VERIFY LOCATION IN FIELD.
7 (N) 8"THK. CONC. CONTAINMENT WALL W/ EPOXY PAINT SEALER FIN., S.AQ.D.

CONCRETE CURB SCHEDULE

FLOOR PLAN TAG	CURB WIDTH	MIN. CURB HEIGHT
W4	4"	6"
W5	5"	6"
W7	7"	6"
W8	8"	6"

CURB TYPE GENERAL NOTES

1. CURBS ARE TAGGED ON SLAB & CURB FLOOR PLANS. REFER TO FLOOR PLANS FOR CURB TYPE IDENTIFICATION.
2. CURB TYPE TAGS ARE USED TO IDENTIFY CONTIGUOUS PARTITION SEGMENTS. IF A CONTIGUOUS CURB SEGMENT IS TAGGED WITH MORE THAN ONE TAG, G.C. TO IDENTIFY TRANSITION POINT AND SUBMIT FOR APPROVAL.
3. PARTITION TAGS USE A TWO-PART, ALPHA-NUMERIC DESIGNATION: THE FIRST CHARACTER IS A LETTER INDICATING THE CURB TYPE. THE SECOND CHARACTER IS A NUMBER INIDCATING THE WIDTH OF THE CURB.
4. REFERENCE STRUCTURAL DRAWINGS FOR ADDITIONAL INFORMATION FOR CURB REINFORCEMENT AND SLAB CONNECTION.
5. COORDINATE CURB WITH PLUMBING FIXTURE CARRIERS AND SUPPORTS PRIOR TO CONSTRUCTION

BUREAU OF ENGINEERING
OFFICIAL RECORD

ENGINEERING
CITY OF LOS ANGELES

BUREAU OF ENGINEERING

NO.	REVISION DESCRIPTION	DATE	BY

BUILDING NO. -

INDEX NO. RP-300118

LICENSED ARCHITECT
JOHN P. SPARANO
No. C-26244
EXP. 1-30-21
STATE OF CALIFORNIA

PUBLIC WORKS
CITY OF LOS ANGELES

DEPARTMENT OF ENGINEERING
GARY LEE MOORE, PE, ENV SP
CITY ENGINEER

	DATE:
CITY ENGINEER	03/03/20
ARCHITECTURAL DIVISION	03/03/20
ARCHITECT/ENGINEER: JOHN SPARANO LIC. NO.: C-26244	03/03/20
DESIGNED BY: SPARANO + MOONEY ARCHITECTURE	03/03/20
DRAWN BY: JORGE BELTRAN	03/03/20
CHECKED BY: LUDWING JUAREZ	03/03/20
APPROVED BY:	

VERTICAL CONTROL:
HORIZONTAL CONTROL:

SHEET TITLE: SLAB AND CURB CONTROL PLAN

PROJECT: GRANADA HILLS POOL AND BATHHOUSE REPLACEMENT PROJECT

ADDRESS: 16730 CHATSWORTH STREET GRANADA HILLS, CA 91344

BID SET
PROJECT ISSUE DATE: 06/22/21

WORK ORDER NO. #E170517

PLAN FILE NO. #308

DRAWING NO. A2.16

SHEET 0 OF SHEETS

PLOTTED:6/18/2020 1:20:22 PM

THE CITY OF LOS ANGELES OR ITS OFFICERS OR AGENTS SHALL NOT BE RESPONSIBLE FOR THE ACCURACY OR COMPLETENESS OF ELECTRONIC COPIES OF THIS PLAN SHEET.

TTLB TEMPLATE REVISION DATE: 02/2013
SHEET ISSUE DATE: 01/25/18
FILE PATH: BIM 360://Granada Hills Pool Renovation/A_Granada-Hills_2017.rvt

REVISION DATES: (DESIGN STAGE ONLY)

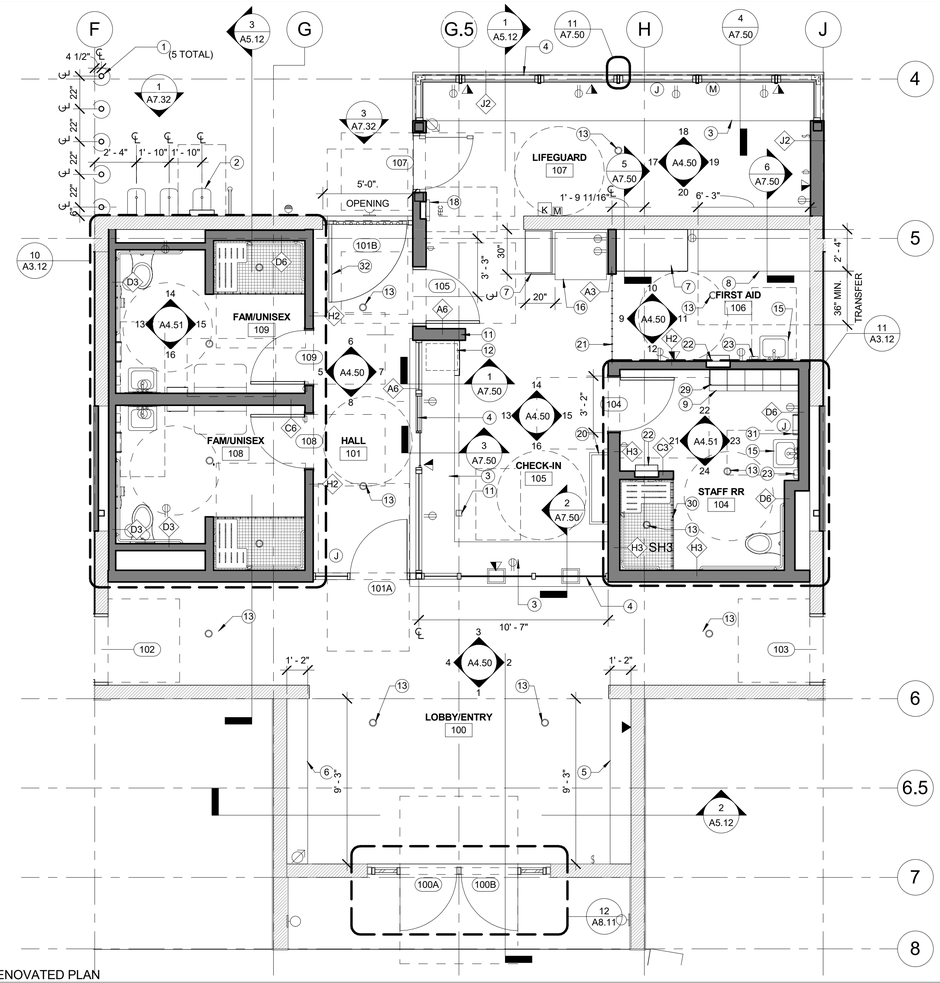

1 BATHHOUSE ADMIN RENOVATED PLAN
1/4" = 1'-0"

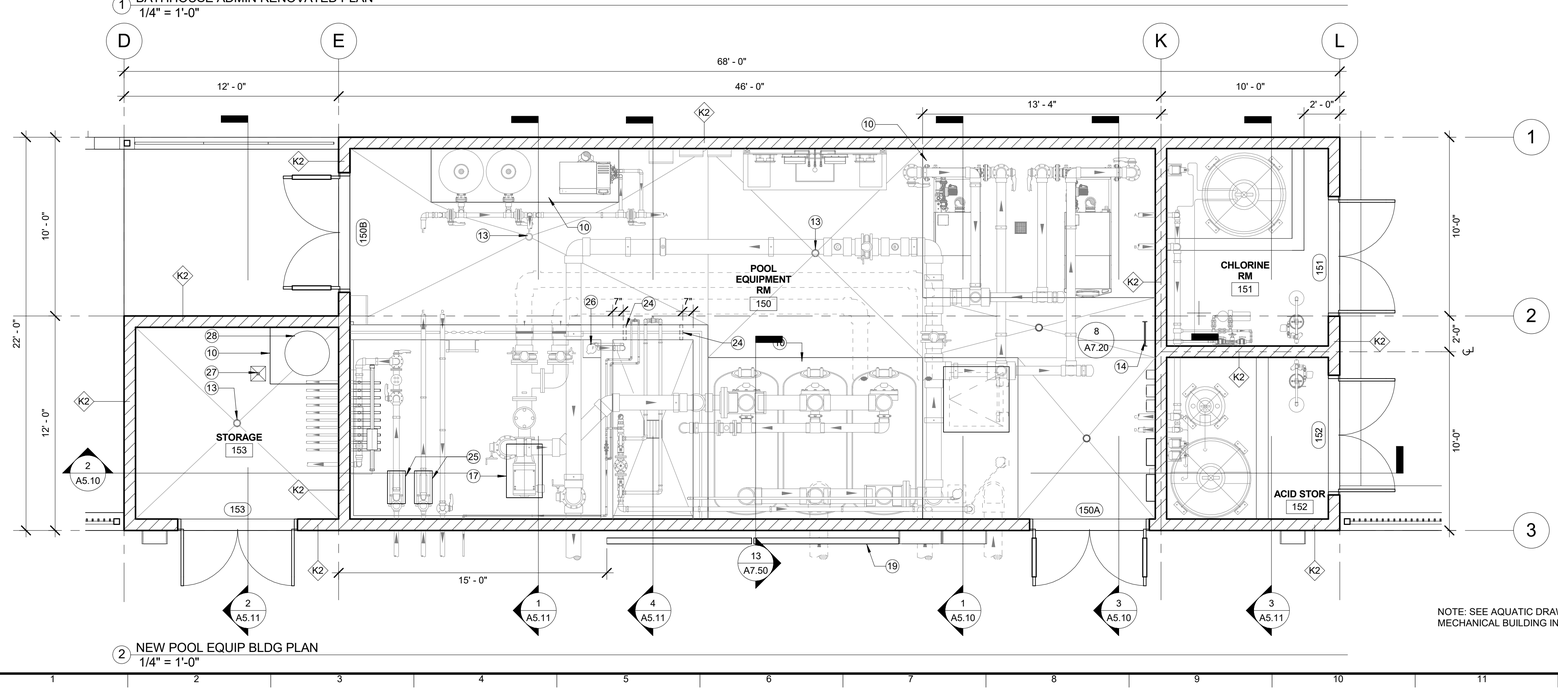

2 NEW POOL EQUIP BLDG PLAN
1/4" = 1'-0"

NOTE: SEE AQUATIC DRAWINGS FOR DETAILED MECHANICAL BUILDING INFORMATION

GRAPHIC LEGEND

- (E) WALL TO REMAIN
- (N) STUD PARTITION, REF WALL TYPES
- (E) MASONRY WALL
- (N) MASONRY WALL
- ADA CLEARANCES SEE G0.40 FOR MORE INFO.

GENERAL NOTES

1. ALL DIMENSIONS TO BE VERIFIED IN FIELD.
2. SEE SHEET A7.00 FOR WALL TYPE INFO.
3. SEEE ACCESSORY KEYNOTES ON INTERIOR ELEVATIONS SHEETS AND SPECS FOR FURTHER ACCESSORY INFO.
4. SEE SHEET A3.12 FOR TOILET, SHOWER, CHANGING, URINAL STALLS AND ACCESSORIES INFORMATION. PLAN DESIGNATION ON THIS SHEET FOR REFERENCE AS "WC#", "SH#", "CH#" AND "U#".
5. SEE SHEET G0.40 FOR ACCESSORY SCHEDULE AND MOUNTING DIAGRAMS.
6. SEE SHEETS G0.40 AND G0.41 FOR ACCESSIBILITY NOTES AND DIAGRAMS.
7. S.S.D. FOR ADDITIONAL NEW WALL INFO.
8. ALL NEW INTERIOR CONCRETE SLABS TO BE SEALED AND RECEIVE NEW COLOR TREATMENT U.N.O. FINISH TO BE MEDIUM BROOM FINISH. CONTRACTOR TO PROVIDE MOCK-UPS OF MEDIUM AND HEAVY FINISH
9. ALL FLOOR SLOPES TO DRAIN TO BE MINIMUM 1% SLOPE AND NOT TO EXCEED 2% IN ANY DIRECTION-TYP.
10. FIRE DEPARTMENT OCCUPANCY SIGNAGE TO DISPLAY TOTAL BATHHOUSE OCCUPANTS. ADDITIONAL SIGNAGE AS SHOWN TO BE PROVIDED BY CONTRACTOR.
11. ALL CABINETRY TO BE SOLID PHENOLIC WITH STAINLESS STEEL HARDWARE.
12. FOR PIPING PENETRATION THROUGH RATED WALLS SEE DETAIL 12/A7.50.
13. ALL EXPOSED METAL TO RECEIVE ANTI CORROSIVE COATING.
14. ALL CHANGING STALLS TO RECEIVE NEW BOBRICL CLOTHES HOOK OR EQUAL
15. SEE SHEET A2.16 FOR SLAB , CURB CONTROL PLAN, FLOOR DRAIN AND SLOPE DIRECTION.
16. SEE SHEET A2.16 FOR DEPRESS FLOOR AREAS FOR TILE INSTALLATION.
17. ALL WALLS INSIDE CHEMICAL ROOMS TO RECEIVE EPOXY SEALER FLOOR TO CEILING.
18. S.AQ.D. FOR ADDITIONAL MECHANICAL BUILDING INFO.
19. G.C. TO SUBMIT MECHANICAL BUILDING PIPING LAYOUT SHOP DRAWINGS FOR APPROVAL TO DESIGN TEAM AND RECREATIONS AND PARK DEPARTMENT.

KEYNOTE LEGEND

1 (N) STEEL SHADE STRUCTURE. PAINT PER SCHEDULE.
2 (N) DRINKING FOUNTAINS (3) ON (E) BRICK WALL W/ (1) BOTTLE FILLING STATION.SEE DETAIL 1/A7.32. S.P.D. FOR MORE INFO.
3 (N) 34" HIGH S.S. COUNTER TOP, SEE DETAIL 5/A7.50 FOR MORE INFO.
4 (N) GLAZED ALUM. FRAMED STOREFONT SYSTEM, SEE SHEET A8.12 FOR MORE INFO.
5 (N) 36" HIGH S.S. PUBLIC COUNTER TOP, REF DETAILS.
6 (N) 42" HIGH S.S. PUBLIC COUNTER TOP, REF DETAILS.
7 (N) CASEWORK.
8 (N) 30" MAX. HEIGHT "FIRST AID" STAINLESS STEEL COUNTER TOP W/ BACKSPLASH EXAM TABLE.
9 (N) 2-TIER SOLID PHENOLIC LOCKERS ON 6" HEIGHT EQUIPMENT PAD. AT LEAST 5% OF LOCKERS TO FOLLOW REACH RANGES 15"TO 48" REACH AND 30"X48" CLEAR SPACE.
10 (N) 6" CONC. EQUIPMENT PAD. S.S.D. AND S.AQ.D. FOR MORE INFO.
11 (E) STEEL COLUMN TO REMAIN, PROTECT. PAINT PER SCHEDULE
12 (N) CONC. BASE FOR SAFE VAULT. SAFE VAULT TO BE PER LADPR SPECIFICATIONS.
13 (N) FLOOR DRAIN, TYP.SEE SHEET A2.13 FOR SLOPE DIRECTION. S.P.D.
14 (N) ROOF HATCH PERMANENT FIXED ACCESS LADDER.
15 (N) LAVATORY W/ "TRUBO LAVSHIELD" PROTECTIVE ENCLOSURE. HOT WATER AND DRAIN PIPES UNDER ACCESSIBLE LAVATORIES SHALL BE INSULATED OR OTHERWISE COVERED, THERE SHALL BE NO SHARP OR ABRASIVE SURFACES UBDER LAVATORIES. S.P.D. AND SHEET G0.40 FOR MORE INFO.
16 (N) REFRIGERATOR. N.I.C.
17 (N) 36"x24"x16"H CONC. EQUIPMENT PAD. S.S.D. AND S.AQ.D. FOR MORE INFO. VERIFY LOCATION IN FIELD.
18 (N) RECESSED WALL MOUNTED FIRE EXTINGUISHER CABINET.
19 (N) WALL MOUNTED SCOREBOARD UNDER SEPARATE PERMIT. S.AQ.D. & S.S.D. FOR MORE INFO.
20 (N) WALL MOUNTED GARMENT CHECK BAG RACK.
21 (N) FIRST AID PRIVACY CURTAIN AND CURTAIN TRACK PER SPECS.
22 (N) SURFACE MOUNTED S.S. COMBINATION PAPER TOWEL DISPENSER/ WASTE RECEPTACLE.
23 (N) SOAP DISPENSER PER ACCESSORY SCHEDULE.SEE SHEET G0.40 FOR MORE INFO.
24 PROVIDE 2" DIA. PVC DRAINAGE SLEEVE TO BACKWASH PIT.
25 (N) 22"x12"x16"H CONC. EQUIPMENT PAD. S.S.D. AND S.AQ.D. FOR MORE INFO. VERIFY LOCATION IN FIELD.
26 (N) 12"x12"x12"D SUMP PIT, S.S.D. AND S.AQ.D. FOR MORE INFO. VERIFY LOCATION IN FIELD.
27 (N) AREA FLOOR DRAIN, TYP.SEE SHEET A2.13 FOR SLOPE DIRECTION. S.P.D.
28 (N) WATER HEATER.
29 (N) 6" CONC. EQUIPMENT PAD. S.S.D. AND SEE SLAB CONTROL PLAN SHEET A2.16 FOR MORE INFO.
30 (N) HEAVY DUTY VINYL SHOWER CURTAIN. SEE SHEET G0.40 FOR CURTAIN,HOOKS AND CURTAIN ROD INFO.
31 (N) SURFACE MOUNTED ELECTRICAL HAND DRYER.S.E.D. FOR MORE INFO.
32 (N) TUBE STEEL GATE TO REMAIN OPEN DURING BUSINESS HOURS.

BUREAU OF ENGINEERING
OFFICIAL RECORD

ENGINEERING
CITY OF LOS ANGELES

NO.	REVISION DESCRIPTION	DATE	BY

BUILDING NO. -
INDEX NO. RP-300118

PUBLIC WORKS
DEPARTMENT OF
BUREAU OF ENGINEERING
CITY OF LOS ANGELES

GARY LEE MOORE, PE, ENV SP
CITY ENGINEER
DATE: 03/03/20

ARCHITECTURAL DIVISION
ARCHITECT/ENGINEER: JOHN SPARANO LIC. NO.: C-26244 — 03/03/20
DESIGNED BY: SPARANO + MOONEY ARCHITECTURE — 03/03/20
DRAWN BY: JORGE BELTRAN — 03/03/20
CHECKED BY: LUDWING JUAREZ — 03/03/20
APPROVED BY: — 03/03/20

JOHN P. SPARANO — No. C-26244 — EXP. 1-30-21 — STATE OF CALIFORNIA — CIVIL — ENGINEER, ARCHITECT

VERTICAL CONTROL:
HORIZONTAL CONTROL:

SHEET TITLE: RENOVATED ENLARGED PLANS

PROJECT: GRANADA HILLS POOL AND BATHHOUSE REPLACEMENT PROJECT

ADDRESS: 16730 CHATSWORTH STREET GRANADA HILLS, CA 91344

BID SET
PROJECT ISSUE DATE: 06/22/21

WORK ORDER NO. #E170517
PLAN FILE NO. #308
DRAWING NO. A3.10
SHEET — OF — SHEETS

PLOTTED:8/28/2020 1:10:02 PM

THE CITY OF LOS ANGELES OR ITS OFFICERS OR AGENTS SHALL NOT BE RESPONSIBLE FOR THE ACCURACY OR COMPLETENESS OF ELECTRONIC COPIES OF THIS PLAN SHEET.

TTLB TEMPLATE REVISION DATE: 02/2013
SHEET ISSUE DATE: 01/31/18
FILE PATH: BIM 360://Granada Hills Pool Renovation/A_Granada-Hills_2017.rvt

REVISION DATES (DESIGN STAGE ONLY)

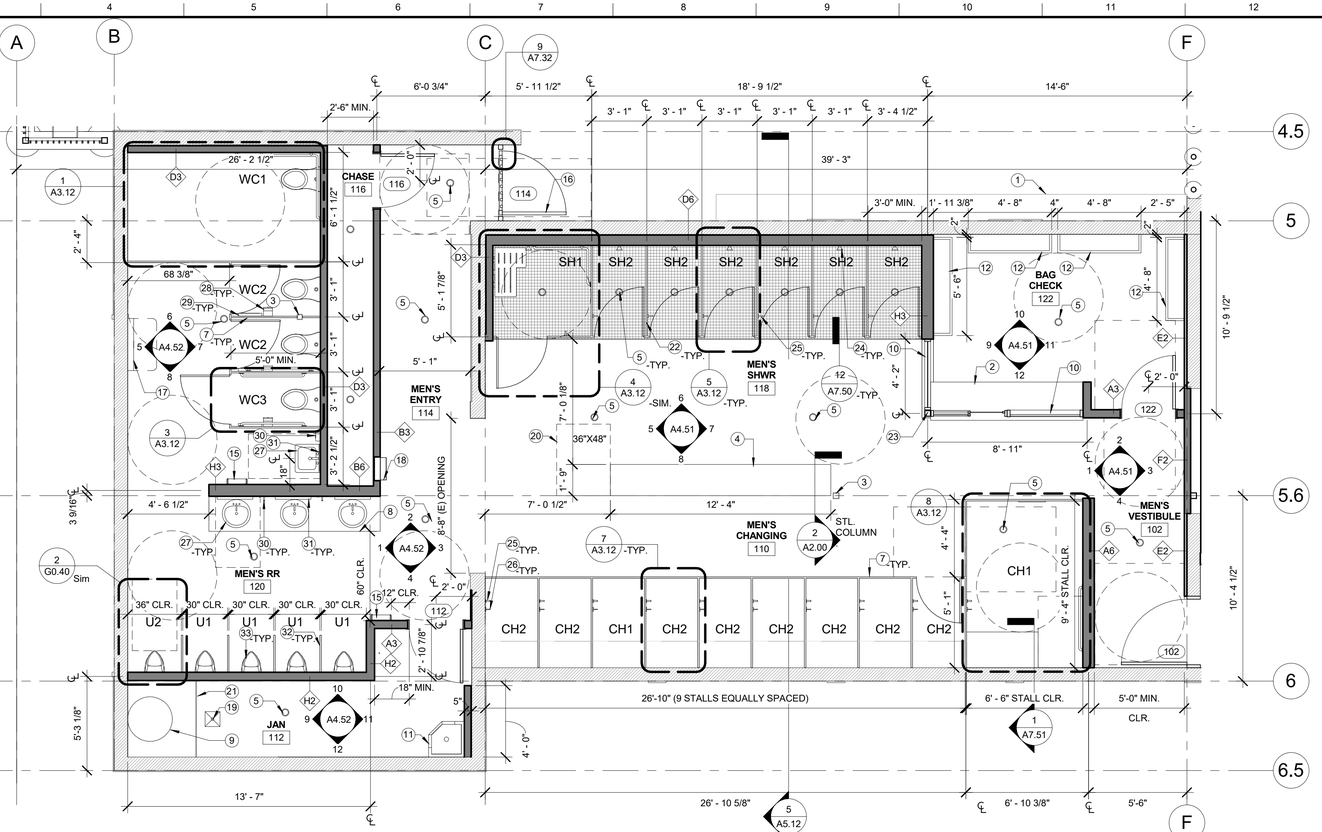
WC1
WC2
WC3
CHASE
116
MEN'S ENTRY
114
MEN'S RR
120
JAN
112
MEN'S SHWR
118
MEN'S CHANGING
110
SH1
SH2
CH1
CH2
BAG CHECK
122
MEN'S VESTIBULE
102
26'-10" (9 STALLS EQUALLY SPACED)
6' - 6" STALL CLR.
5'-0" MIN. CLR.
36"X48"
STL. COLUMN
A2.00
A4.52
A4.51
A4.51 OPP.
A4.53
A5.12
A7.51
A7.50
A3.12
A3.12 -SIM.
A3.12 -TYP.
A4.12 -SIM.
A4.12 -TYP.
A2.00 Sim
G0.40 Sim
A5.12
A5.12 -TYP.
A7.32
A4.51 OPP.
A4.53
A4.53 OPP.
A4.53 -SIM.
A4.53 -TYP.
A4.51 -SIM.
A4.51 -TYP.
A4.52 -TYP.
A3.12 -TYP.
A7.50 -TYP.
A2.00 -TYP.
A7.51
A4.51
A4.52
A4.53
A5.12
A3.12
A7.32
A7.50
A2.00
G0.40
A4.51 OPP.

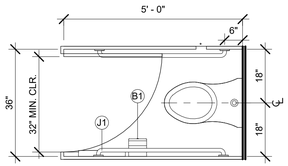

*NOTE: COORDINATE STALL LOCATIONS W/ (E) STEEL COLUMNS. VIF.

AMBULATORY STALL
PLAN DESIGNATION WC3
3 1/2" = 1'-0"

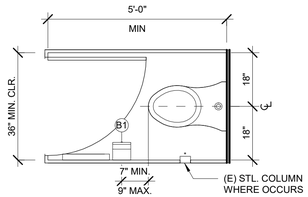

*NOTE: COORDINATE STALL LOCATIONS W/ (E) STEEL COLUMNS. VIF.

TYPICAL STALL
PLAN DESIGNATION WC2
2 1/2" = 1'-0"

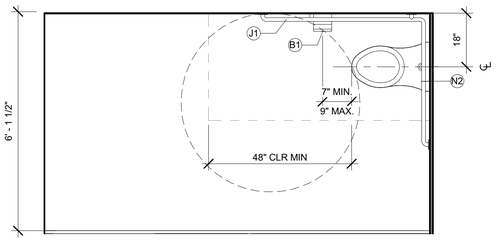

NOTE: SEE DETAIL 1/G0.40 "WC-1" FOR MORE INFO.

ACCESSIBLE STALL
PLAN DESIGNATION WC1
1 1/2" = 1'-0"

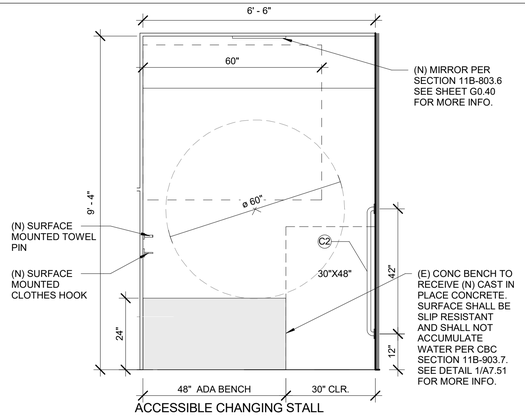

ACCESSIBLE CHANGING STALL
PLAN DESIGNATION CH1
8 1/2" = 1'-0"

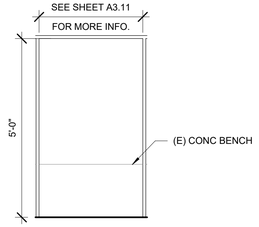

STANDARD CHANGING STALL
PLAN DESIGNATION CH2
7 1/2" = 1'-0"

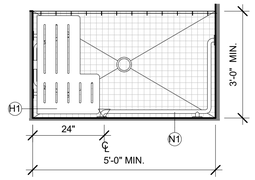

ACCESSIBLE SHOWER PLAN
DESIGNATION SH3
6 1/2" = 1'-0"

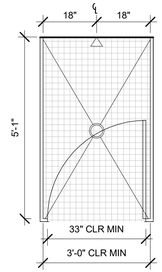

STANDARD SHOWER STALL PLAN
DESIGNATION SH2
5 1/2" = 1'-0"

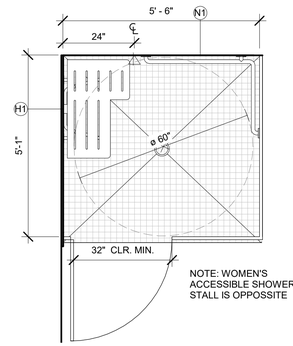

NOTE: WOMEN'S ACCESSIBLE SHOWER STALL IS OPPOSSITE

ACCESSIBLE SHOWER STALL
PLAN DESIGNATION SH1
4 1/2" = 1'-0"

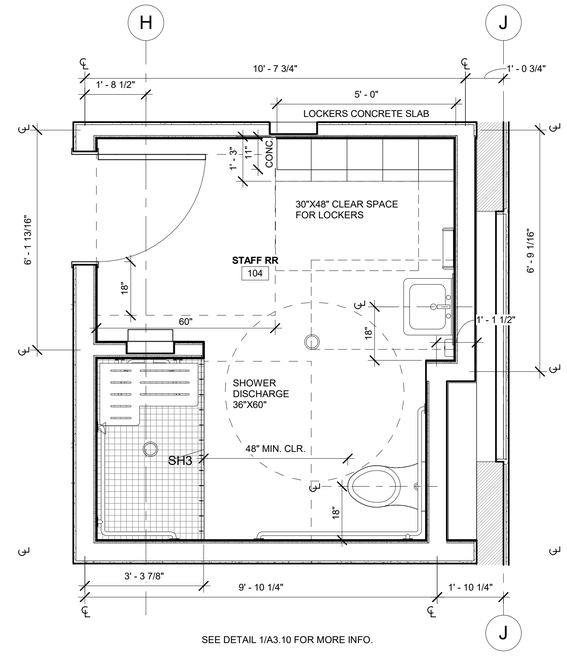

SEE DETAIL 1/A3.10 FOR MORE INFO.

STAFF RESTROOM ENLARGED PLAN
11 1/2" = 1'-0"

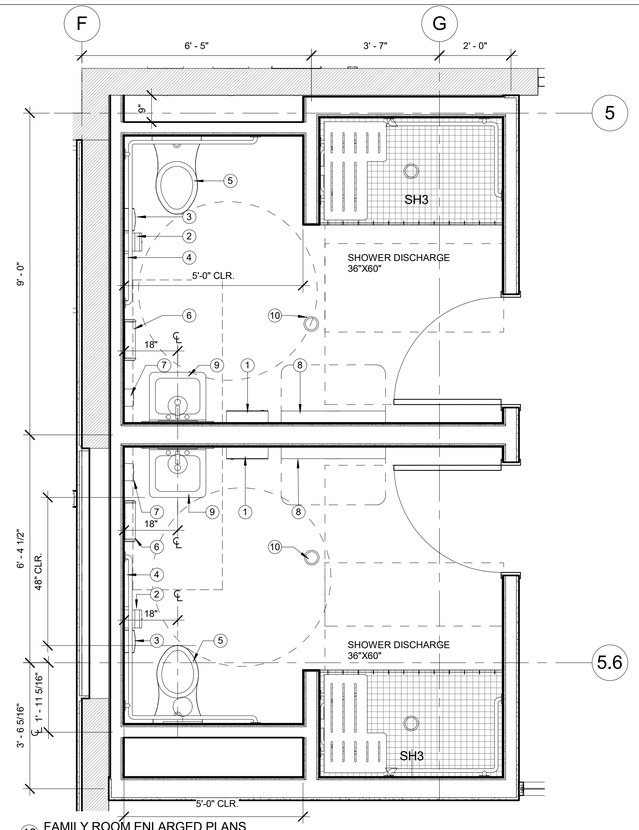

FAMILY ROOM ENLARGED PLANS
10 1/2" = 1'-0"

GENERAL NOTES

1. ALL DIMENSIONS TO BE VERIFIED IN FIELD.
2. SEE SHEET G0.40 FOR ACCESSORY SCHEDULE AND MOUNTING DIAGRAMS.
3. SEE SHEETS G0.40 AND G0.41 FOR ACCCESSIBILITY NOTES AND DIAGRAMS.
4. SEE ACCESSORY KEYNOTES ON INTERIOR ELEVATIONS SHEETS FOR MORE INFO.
5. SEE ENLLARGED FLOOR PLANS FOR TYPICAL AND ACCESSIBLE STALL DESIGNATIONS.
6. SEE ENLARGED FLOOR PLANS FOR STANDARD AND ACCESSIBLE SHOWER STALL PLAN DESIGNATIONS.
7. SEE ENLARGED FLOOR PLANS FOR TYPICAL AND ACCESSIBLE CHANGING STALL PLAN DESIGNATIONS.
8. ALL ACESSORIES TO BE "BOBRICK" (FINISHES TO BE SATIN-FINISH STAINLESS STEEL).
9. TOILET AND SHOWER PARTITION ASSEMBLY PILASTER REQUIRES STAINLESS STEEL SHOE.

TOILET ACCESSORY SCHEDULE

MARK	ACCESSORY TYPE	BASIS OF DESIGN MFR	MODEL
B1	SURFACE MOUNTED MULTI-ROLL TOILET TISSUE DISPENSER	BOBRICK	B-2888
C2	GRAB BAR	BOBRICK	B6806 x 42
D1	RECESSED CONVERTIBLE COMBINATION TOWEL AND WASTE UNIT	BOBRICK	B-3944
G1	SURFACE MOUNTED SANITARY NAPKIN DISPOSAL	BOBRICK	B-270
H1	REVERSIBLE SOLID PHENOLIC FOLDING SHOWER SEAT	BOBRICK	B-5193
J2	RECESSED SOAP DISPENSER	BOBRICK	B-306
N1	GRAB BAR	BOBRICK	B-6868
N2	GRAB BAR	BOBRICK	B-5897
J1	TOILET SEAT COVER DISPENSER	BOBRICK	B-4221

KEYNOTE LEGEND

1 (N) SURFACE MOUNTED S.S. COMBINATION PAPER TOWEL DISPENSER/ WASTE RECEPTACLE.
2 (N) SURFACE MOUNTED S.S. TOILET PAPER DISPENSER. ONE PER WATER CLOSET SEE ACCESSORY MOUNTING AND SCHEDULE ON SHEET SHEET G0.40 FOR MORE INFO.
3 (N) SANITARY NAPKIN DISPOSAL. SEE ACCESSORY MOUNTING AND SCHEDULE ON SHEET SHEET G0.40 FOR MORE INFO.
4 (N) SURFACE MOUNTED S.S. SEAT COVER DISPENSER. ONE PER WATER CLOSET. SEE ACCESSORY MOUNTING AND SCHEDULE ON SHEET SHEET G0.40 FOR MORE INFO.
5 (N) WATER CLOSET. S.P.D. AND SHEET G0.40 FOR MORE INFO.
6 (N) SURFACE MOUNTED ELECTRICAL HAND DRYER.S.E.D. FOR MORE INFO.
7 (N) SOAP DISPENSER PER ACCESSORY SCHEDULE.SEE SHEET G0.40 FOR MORE INFO.
8 (N) WALL MOUNTED HORIZONTAL CHANGING BABY STATION.
9 (N) LAVATORY W/ "TRUBO LAVSHIELD" PROTECTIVE ENCLOSURE. HOT WATER AND DRAIN PIPES UNDER ACCESSIBLE LAVATORIES SHALL BE INSULATED OR OTHERWISE COVERED, THERE SHALL BE NO SHARP OR ABRASIVE SURFACES UBDER LAVATORIES. S.P.D. AND SHEET G0.40 FOR MORE INFO.
10 (N) FLOOR DRAIN, TYP.SEE SHEET A2.13 FOR SLOPE DIRECTION. S.P.D.

BUREAU OF ENGINEERING
OFFICIAL RECORD

ENGINEERING
CITY OF LOS ANGELES

BUREAU OF ENGINEERING
NO. | REVISION DESCRIPTION | DATE | BY
BUILDING NO. -
INDEX NO. RP-300118

LICENSED ARCHITECT
GARY P. SPARANO
No. C-26244
EXP. 1-30-21
STATE OF CALIFORNIA

DEPARTMENT OF PUBLIC WORKS
GARY LEE MOORE, PE, ENV SP
CITY ENGINEER

	DATE:
ARCHITECTURAL DIVISION	03/03/20
ARCHITECT/ENGINEER: JOHN SPARANO LIC. NO.: C-26244	03/03/20
DESIGNED BY: SPARANO + MOONEY ARCHITECTURE	03/03/20
DRAWN BY: JORGE BELTRAN	03/03/20
CHECKED BY: LUDWING JUAREZ	03/03/20
APPROVED BY:	

CITY OF LOS ANGELES
VERTICAL CONTROL:
HORIZONTAL CONTROL:
SHEET TITLE: TOILET STALL TYPES AND ACCESSORIES
PROJECT: GRANADA HILLS POOL AND BATHHOUSE REPLACEMENT PROJECT
ADDRESS: 16730 CHATSWORTH STREET GRANADA HILLS, CA 91344

BID SET
PROJECT ISSUE DATE: 06/22/21

WORK ORDER NO. #E170517
PLAN FILE NO. #308
DRAWING NO. A3.12
SHEET OF SHEETS

PLOTTED:8/18/2020 1:20:40 PM

THE CITY OF LOS ANGELES OR ITS OFFICERS OR AGENTS SHALL NOT BE RESPONSIBLE FOR THE ACCURACY OR COMPLETENESS OF ELECTRONIC COPIES OF THIS PLAN SHEET.

TTLB TEMPLATE REVISION DATE: 02/2013
SHEET ISSUE DATE: 01/04/18
FILE PATH: BIM 360://Granada Hills Pool Renovation/A_Granada-Hills_2017.rvt
REVISION DATES: (DESIGN STAGE ONLY)

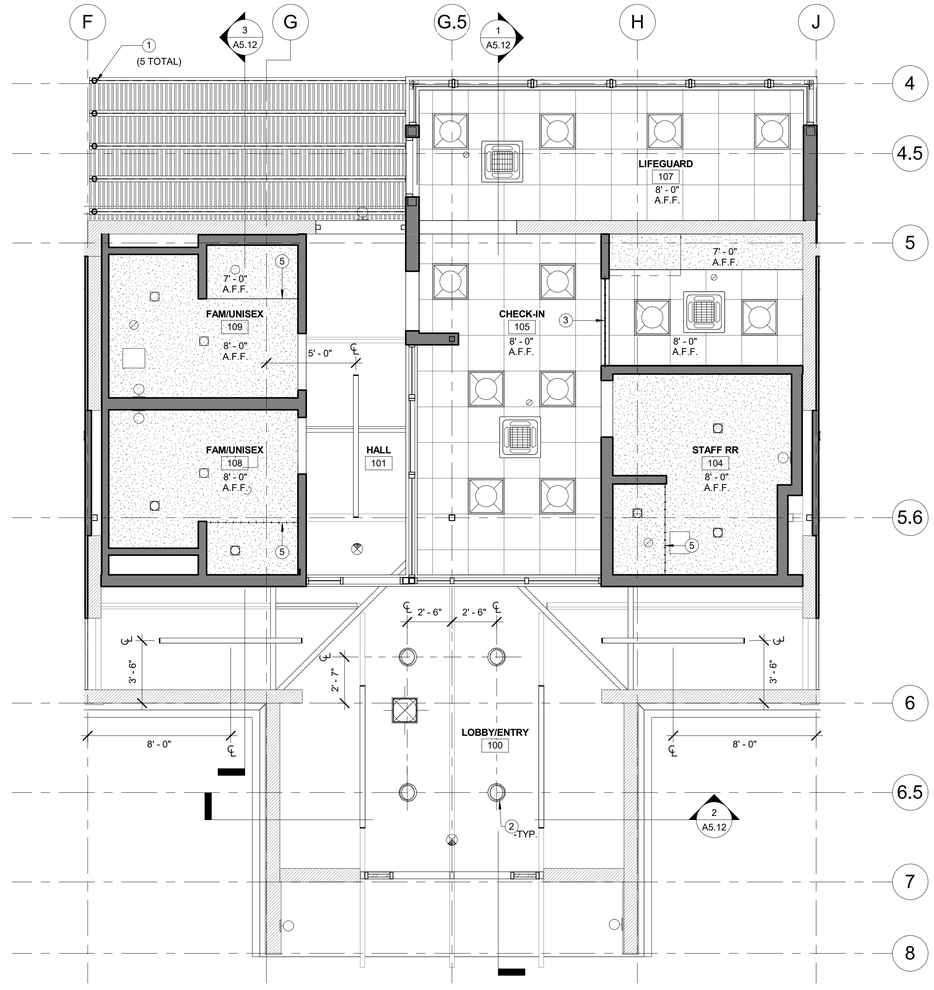

1 BATHHOUSE ADMIN RCP
1/4" = 1'-0"

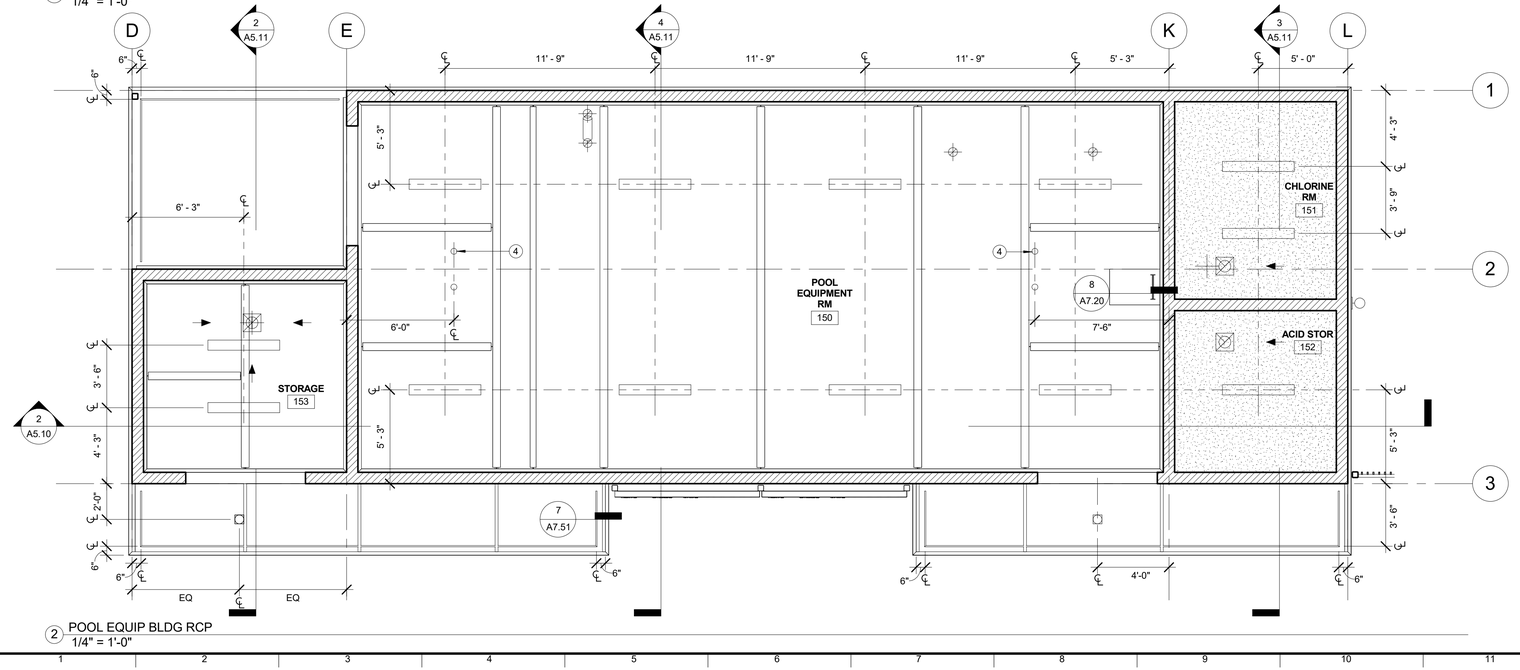

2 POOL EQUIP BLDG RCP
1/4" = 1'-0"

GENERAL NOTES

1. ALL NEW LIGHTING TO COMPLY WITH NEW TITLE 24. S.E.D. FOR MORE INFO.
2. S.E.D. FOR FURTHER LIGHTING FIXTURE INFORMATION.
3. S.M.D. AND S.P.D. FOR FURTHER INFO.
4. G.C. TO PROVIDE SHOP-DRAWINGS FOR ROUTING OF CONDUITS TO LIGHTING FIXTURES FOR REVIEW & APPROVAL.
5. ALL UTILITY LINES ARE TO BE ROUTED WITHIN THE NEW UTILITY CHASE AND NOT LEFT EXPOSED U.N.O.
6. ALL (E) EXPOSED WOODEN CEILING AND STRUCTURE IN BATHHOUSE BLDG. TO BE PTD. PT-01

GRAPHIC LEGEND

- ACT CEILING
- GYP BD CEILING
- SUPPLY AIR
- RETURN AIR
- EXHAUST AIR
- RECTANGULAR LIGHT
- DOWNLIGHT
- SURFACE MOUNTED
- CHANDELIER
- PENDANT TYPE
- LINEAR PENDANT
- TASK LINEAR TYPE
- SPEAKER
- COMBINATION SMOKE & CARBON MONIXDE DETECTOR

KEYNOTE LEGEND

1 (N) STEEL SHADE STRUCTURE. PAINT PER SCHEDULE.
2 (N) SKYLIGHT, TYP.
3 (N) EXTRUDED ALUM CURTAIN TRACK. BASIS OF DESIGN: INPRO NANOTRAC CUBICLE TRACK CE7000
4 (N) ROOF DRAIN AND OVERFLOW SYSTEM.
5 (N) HEAVY DUTY VINYL SHOWER CURTAIN. SEE SHEET G0.40 FOR CURTAIN,HOOKS AND CURTAIN ROD INFO.

BUREAU OF ENGINEERING
OFFICIAL RECORD

BUREAU OF ENGINEERING
CITY OF LOS ANGELES

NO.	REVISION DESCRIPTION	DATE	BY

BUILDING NO. -
INDEX NO. RP-300118

LICENSED ARCHITECT
JOHN P. SPARANO
No. C-26244
EXP. 1-30-21
STATE OF CALIFORNIA

DEPARTMENT OF PUBLIC WORKS
BUREAU OF ENGINEERING
CITY OF LOS ANGELES

GARY LEE MOORE, PE, ENV SP
CITY ENGINEER

		DATE:
ARCHITECTURAL DIVISION		
ARCHITECT/ENGINEER:	JOHN SPARANO LIC. NO.: C-26244	03/03/20
DESIGNED BY:	SPARANO + MOONEY ARCHITECTURE	03/03/20
DRAWN BY:	JORGE BELTRAN	03/03/20
CHECKED BY:	LUDWING JUAREZ	03/03/20
APPROVED BY:		03/03/20

BID SET
PROJECT ISSUE DATE: 06/22/21
CITY OF LOS ANGELES

VERTICAL CONTROL:
HORIZONTAL CONTROL:

SHEET TITLE: REFLECTED CEILING PLANS

PROJECT: GRANADA HILLS POOL AND BATHHOUSE REPLACEMENT PROJECT

ADDRESS: 16730 CHATSWORTH STREET GRANADA HILLS, CA 91344

WORK ORDER NO. #E170517
PLAN FILE NO. #308
DRAWING NO. A3.50
SHEET OF SHEETS

PLOTTED:8/18/2020 1:20:45 PM

THE CITY OF LOS ANGELES OR ITS OFFICERS OR AGENTS SHALL NOT BE RESPONSIBLE FOR THE ACCURACY OR COMPLETENESS OF ELECTRONIC COPIES OF THIS PLAN SHEET.

TTLB TEMPLATE REVISION DATE: 02/2013
SHEET ISSUE DATE: 01/04/18
FILE PATH: BIM 360://Granada Hills Pool Renovation/A_Granada-Hills_2017.rvt

REVISION DATES (DESIGN STAGE ONLY)

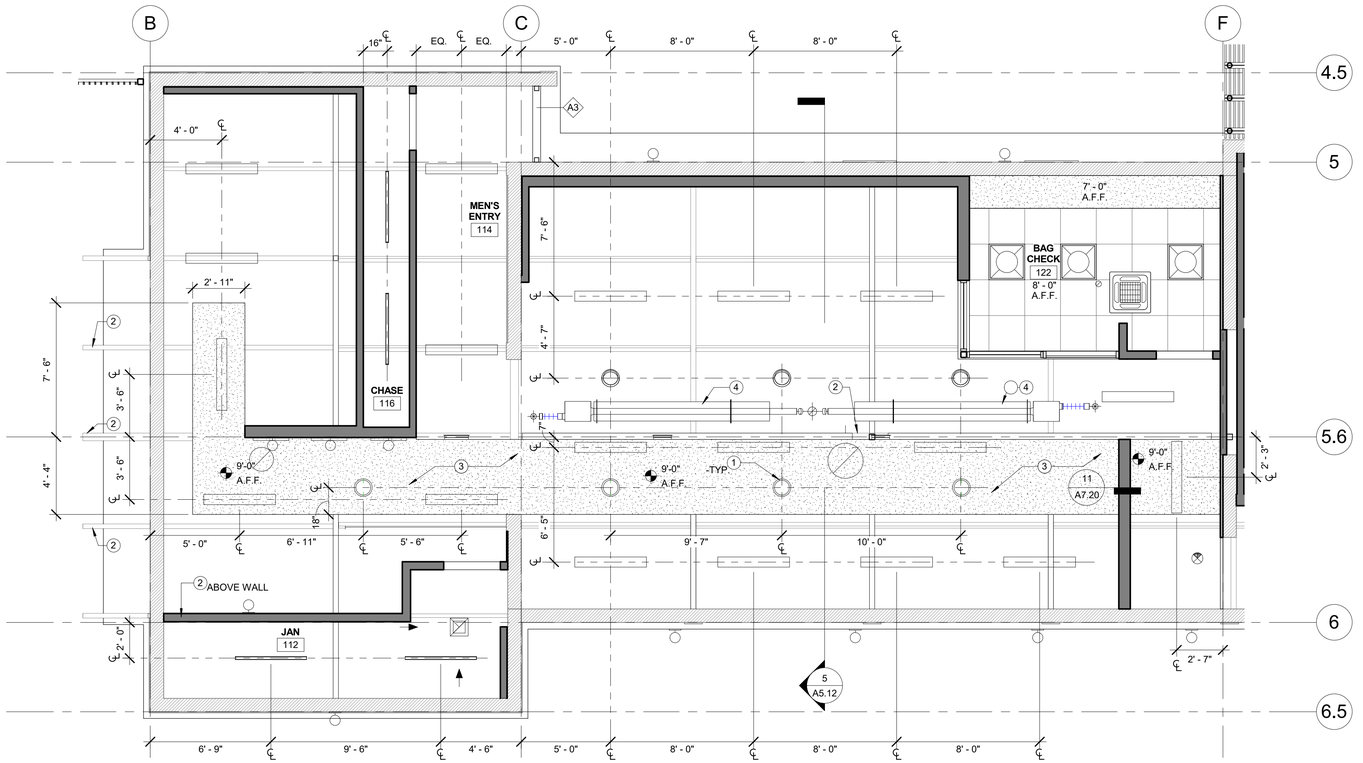

1 BATHHOUSE MEN'S RCP
1/4" = 1'-0"

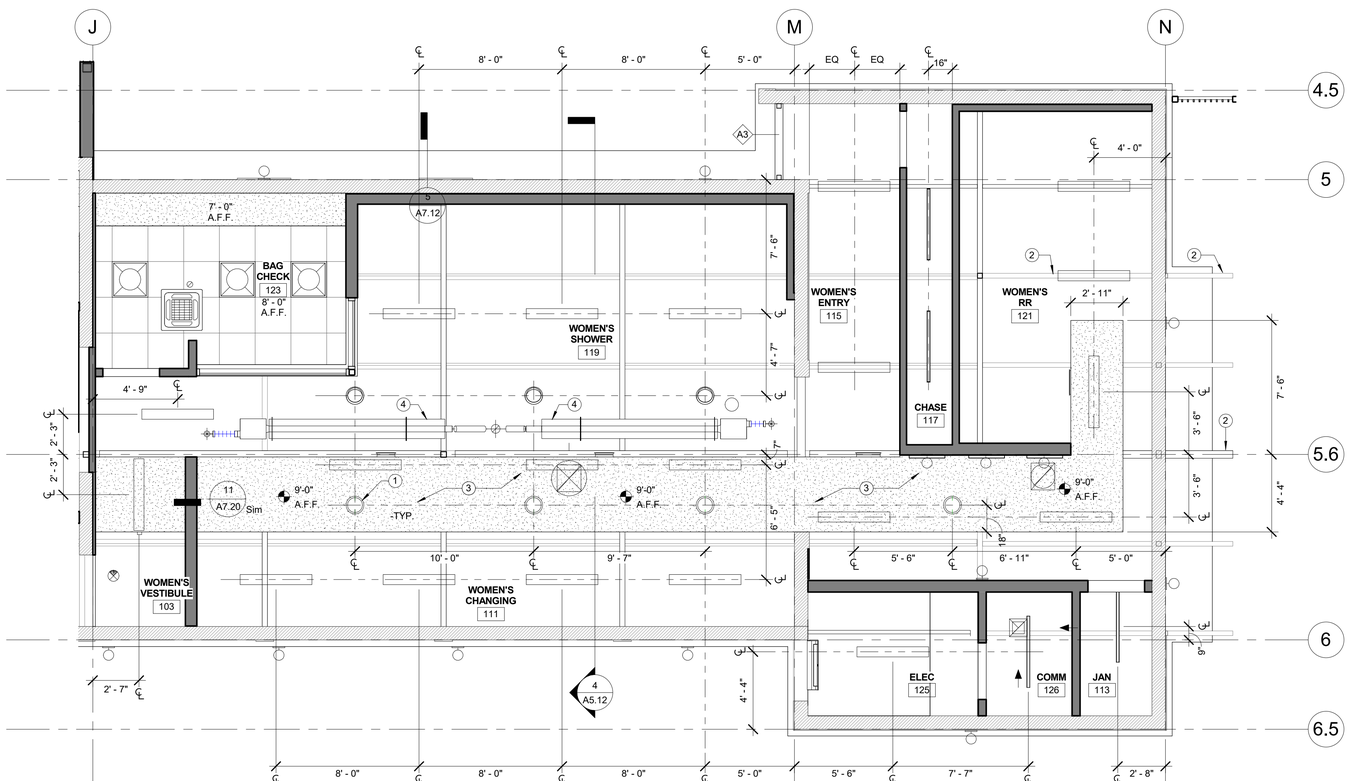

2 BATHHOUSE WOMEN'S RCP
1/4" = 1'-0"

GENERAL NOTES

1. ALL NEW LIGHTING TO COMPLY WITH NEW TITLE 24. S.E.D. FOR MORE INFO.
2. S.E.D. FOR FURTHER LIGHTING FIXTURE INFORMATION.
3. S.M.D. AND S.P.D. FOR FURTHER INFO.
4. G.C. TO PROVIDE SHOP-DRAWINGS FOR ROUTING OF CONDUITS TO LIGHTING FIXTURES FOR REVIEW & APPROVAL.
5. ALL UTILITY LINES ARE TO BE ROUTED WITHIN THE NEW UTILITY CHASE AND NOT LEFT EXPOSED U.N.O.
6. ALL (E) EXPOSED WOODEN CEILING AND STRUCTURE IN BATHHOUSE BLDG. TO BE PTD. PT-01

GRAPHIC LEGEND

- ACT CEILING
- GYP BD CEILING
- SUPPLY AIR
- RETURN AIR
- EXHAUST AIR
- RECTANGULAR LIGHT
- DOWNLIGHT
- SURFACE MOUNTED
- CHANDELIER
- PENDANT TYPE
- LINEAR PENDANT
- TASK LINEAR TYPE
- SPEAKER
- COMBINATION SMOKE & CARBON MONIXDE DETECTOR

KEYNOTE LEGEND

1 (N) SKYLIGHT, TYP.
2 (E) BEAM TO BE REPAIRED AND OR PARTIALLY REPLACED. SEE WOOD FRAMING INSPECTION REPORT INCLUDED IN SPECS FOR MORE INFO.
3 (N) MECHANICAL CHASE. TO BE PTD. PT-002.
4 (N) INFRARED GAS-FIRED HEATER.S.M.D. FOR MORE INFO.

BUREAU OF ENGINEERING
OFFICIAL RECORD

ENGINEERING
CITY OF LOS ANGELES

BUREAU OF ENGINEERING

NO.	REVISION DESCRIPTION	DATE	BY

BUILDING NO. -
INDEX NO. RP-300118

ENGINEER ARCHITECT
JOHN P. SPARANO
No. C-26244
DATE 4-30-21
STATE OF CALIFORNIA

DEPARTMENT OF PUBLIC WORKS
CITY OF LOS ANGELES

GARY LEE MOORE, PE, ENV SP
CITY ENGINEER

		DATE:
ARCHITECTURAL DIVISION		
ARCHITECT/ENGINEER:	JOHN SPARANO LIC. NO.: C-26244	03/03/20
DESIGNED BY:	SPARANO + MOONEY ARCHITECTURE	03/03/20
DRAWN BY:	JORGE BELTRAN	03/03/20
CHECKED BY:	LUDWING JUAREZ	03/03/20
APPROVED BY:		03/03/20

VERTICAL CONTROL:
HORIZONTAL CONTROL:
SHEET TITLE: REFLECTED CEILING PLANS
PROJECT: GRANADA HILLS POOL AND BATHHOUSE REPLACEMENT PROJECT
ADDRESS: 16730 CHATSWORTH STREET GRANADA HILLS, CA 91344

BID SET
PROJECT ISSUE DATE: 06/22/21
CITY OF LOS ANGELES

WORK ORDER NO. #E170517
PLAN FILE NO. #308
DRAWING NO. A3.51
SHEET O F SHEETS

PLOTTED:8/18/2020 1:20:50 PM

THE CITY OF LOS ANGELES OR IT'S OFFICERS OR AGENTS SHALL NOT BE RESPONSIBLE FOR THE ACCURACY OR COMPLETENESS OF ELECTRONIC COPIES OF THIS PLAN SHEET.

TTLB TEMPLATE REVISION DATE: 02/2013
SHEET ISSUE DATE: 02/01/18
FILE PATH: BIM 360://Granada Hills Pool Renovation/A_Granada-Hills_2017.rvt

REVISION DATES (DESIGN STAGE ONLY)

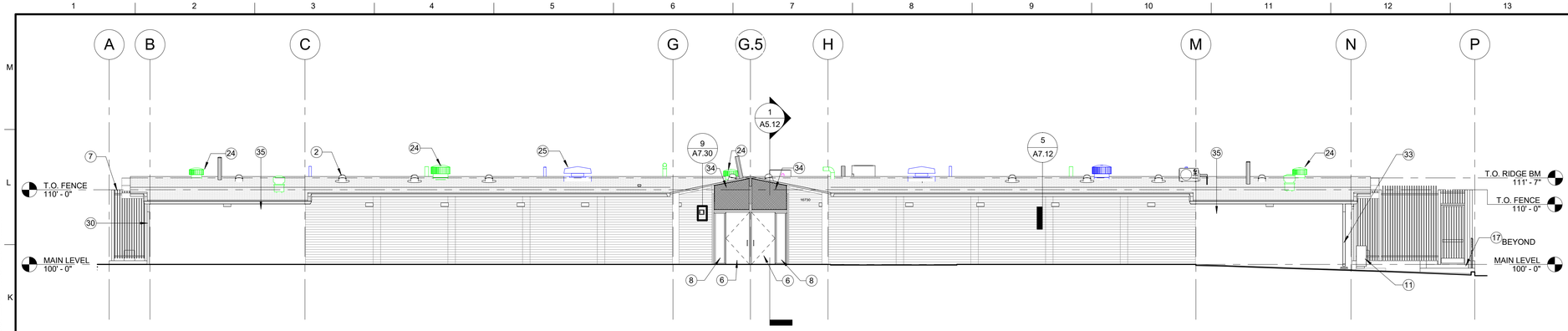

2 WEST ELEVATION
1/8" = 1'-0"

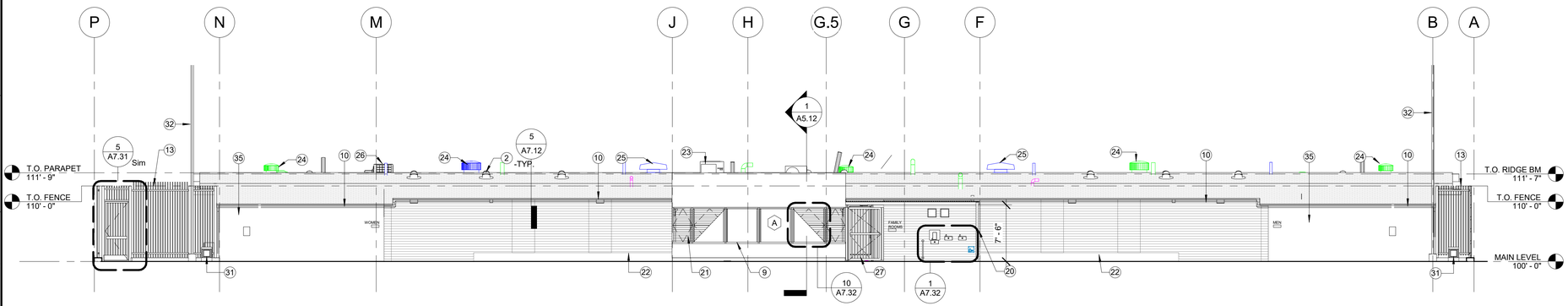

1 EAST ELEVATION
1/8" = 1'-0"

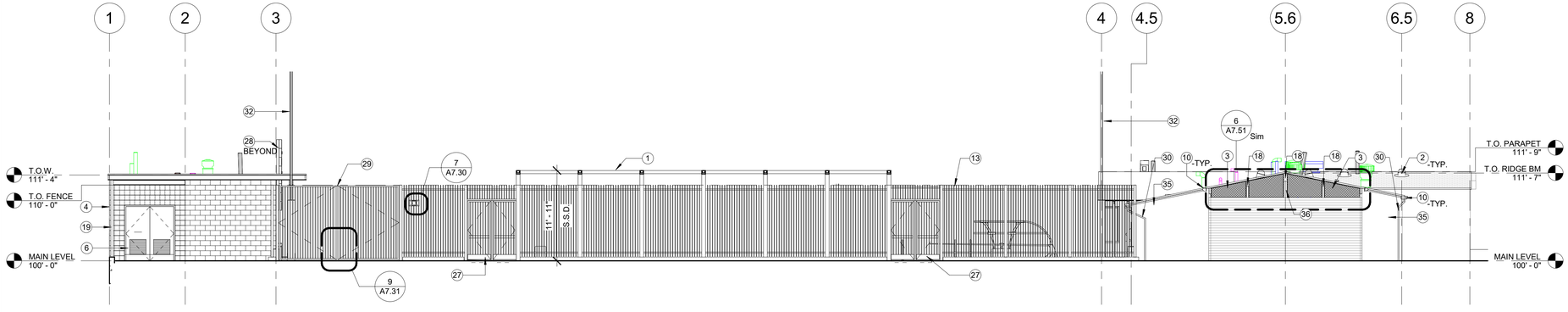

4 NORTH ELEVATION
1/8" = 1'-0"

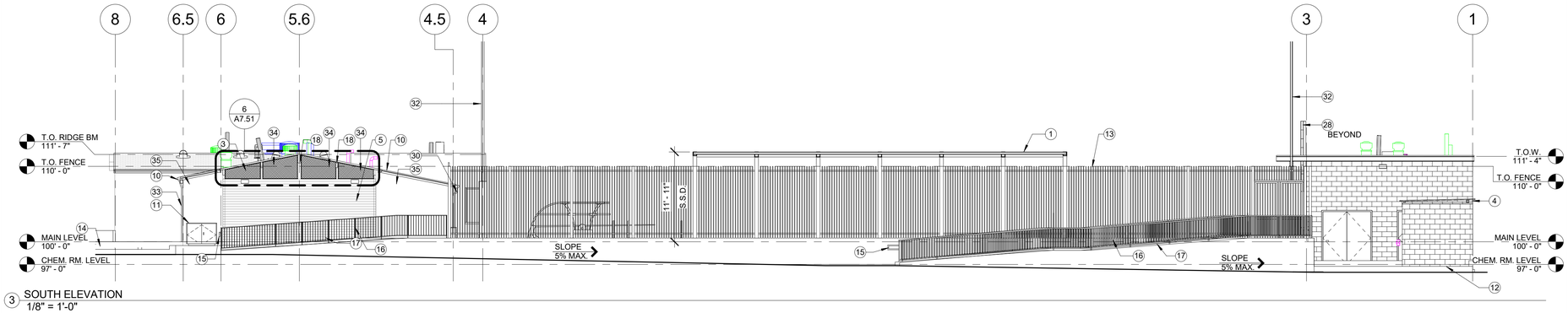

3 SOUTH ELEVATION
1/8" = 1'-0"

KEYNOTE LEGEND

1 (N) TUBE STEEL STRUCTURE FOR MOUNTING PHOTOVOLTAIC PANELS. SEE SHEET S3.02 FOR MORE INFO.
2 (N) SKYLIGHT, TYP.
3 (N) S.S. WIRE MESH SECURITY SCREEN SYSTEM.
4 (N) POOL EQUIPMENT BUILDING, REF ENLARGED ELEVATIONS.
5 (E) BRICK WALL TO BE CLEANED AND REPAINTED PER SCHEDULE.
6 (N) DOOR, SEE DOOR SCHEDULE SHEET A8.10 FOR MORE INFO.
7 (N) TUBE STEEL FENCE ON (N) 10" W CONC CURB, REF DETAILS.
8 (N) H.M. SIDE PANEL TO MATCH (N) DOOR. SEE DOOR SCHEDULE SHEET A8.10 FOR MORE INFO.
9 (N) GLAZED ALUM. FRAMED STOREFONT SYSTEM, SEE SHEET A8.12 FOR MORE INFO.
10 (N) MTL. GUTTER.
11 (E) IRRIGATION CONTROLLER BOX TO REMAIN AND BE PTROTECTED DURING CONSTRUCTION.SEE SHEETS L-0.20 AND CD1.01 FOR MORE INFO.
12 (N) CONCRETE CURB. S.C.D. FOR MORE INFO.
13 (N) 9'-6" H TUBE STEEL FENCE ON 6" H CONC CURB.
14 (N) PLANTER BED W/ RETAINING WALL/CURB. S.C.D AND S.L.D.
15 (N) 1 1/2" GALV. ST. PIPE HANDRAIL W/ PTD. FINISH CONNECTED TO GUARDRAIL POST-TYP.
16 (N) 1 1/2" GALV. STL. PIPE GUARDRAIL W/ PTD. FINISH.
17 (N) CONCRETE RAMP. S.C.D.
18 (E) BEAM TO BE REPAIRED AND OR PARTIALLY REPLACED. SEE WOOD FRAMING INSPECTION REPORT INCLUDED IN SPECS FOR MORE INFO.
19 (N) TUBE STEEL COLUMN. S.S.D. PAINT PER SCHEDULE.
20 (N) STEEL SHADE STRUCTURE. PAINT PER SCHEDULE.
21 (N) 1/8" PERFORATED ALUMINUM RIVETED TO TUBE FRAME SHUTTER SYSTEM. SEE SHEETS A6.11 AND A7.50 FRO MORE INFO.
22 (E) CONCRETE BENCH TO REMAIN, PROTECT.
23 (N) SPLIT USYSTEM OUTDOOR HEAT PUMP UNIT. S.M.D. FOR MORE INFO.
24 (N) ROOF EXHAUST FAN. S.M.D. FOR MORE INFO.
25 (N) MAKE-UP AIR INTAKE ROOF VENTILATOR. S.M.D. FOR MORE INFO.
26 (N) CONDENSING UNIT. S.M.D. FOR MORE INFO.
27 (N) TUBE STEEL GATE. SEE DOOR SCHEDULE SHEET A8.10 FOR MORE INFO.
28 (N) WALL MOUNTED SCOREBOARD UNDER SEPARATE PERMIT. S.AQ.D. & S.S.D. FOR MORE INFO.
29 (N) TUBE STEEL SERVICE GATE. SEE DOOR SCHEDULE SHEET A8.10 FOR MORE INFO.
30 (N) MTL. DOWNSPOUT CONNECTED TO STORM DRAIN PER CIVIL DRAWINGS. S.C.D. SHEET C400 FOR MORE INFO.
31 (N) HOSE BIBB CONC. PEDESTAL, S.AQ.D. FOR SIZE & REINFORCEMENT. IT IS ACCEPTABLE TO RECESS BOX WITHIN AN ADJACENT NEW BUILDING WALL, G.C. RESPONSIBLE FOR COORDINATING ALL COMPONENTS.
32 (N) NEW LIGHT POLE, S.E.D. & MUSCO STRUCT. DWGS FOR MORE INFO.
33 (N) MTL. DOWNSPOUT SEE DOWNSPOUT BASE DETAIL ON SHEET A7.31 FOR MORE INFO.
34 (E) WIRE MESH PANEL AND ASSOCIATED WOODEN FRAME TO BE REMOVED. (E) WIRE MESH TO BE REASSEMBLED WITH (N) WOODEN FRAME AND RE-INSTALLED IN ORIGINAL PLACE. ADJACENT STRUCTURE SUCH AS BRICK WALL, WOODEN COLUMNS AND ROOF TO BE PROTECTED DURING CONSTRUCTION. SEE DETAILS FOR MORE INFO.
35 (N) STUCCO TO MATCH (E). PTD-01
36 (E) 4"X6" CUT TO FIT WOOD COLUMN TO BE REPLACED WITH NEW. G.C. TO COORDINATE SHORING PLAN FOR THE 5-1/8"X13-1/2" GLUE LAM. GIRDER WITH STRUCTURAL ENGINEER.

STORMWATER MITIGATION
LOW IMAPCT DEVELOPMENT (LID)
APPROVED WITH CONDITIONS

This set of plans and specifications must be at the jobsite during construction

Stormwater Observation Report (SOR) is required prior to issuance of Certificate of Occupancy or final sign off.

Total Pages _____ Restamped

Digitally Signed By: A. Eltawil Date: 08/31/2020
Department of Public Works - Bureau of Sanitation
Watershed Protection Division

BUREAU OF ENGINEERING
OFFICIAL RECORD

ENGINEERING
CITY OF LOS ANGELES

BUREAU OF ENGINEERING

NO.	REVISION DESCRIPTION	DATE	BY

BUILDING NO. -
INDEX NO. RP-300118

ENGINEER OF RECORD
ARCHITECT/ENGINEER: JOHN SPARANO LIC. NO.: C-26244
DESIGNED BY: SPARANO + MOONEY ARCHITECTURE
DRAWN BY: JORGE BELTRAN
CHECKED BY: LUDWING JUAREZ
APPROVED BY:

DEPARTMENT OF PUBLIC WORKS
GARY LEE MOORE, PE, ENV SP
CITY ENGINEER
DATE: 03/03/20

CITY OF LOS ANGELES
BID SET
PROJECT ISSUE DATE: 06/22/21
VERTICAL CONTROL:
HORIZONTAL CONTROL:
SHEET TITLE: EXTERIOR ELEVATIONS
PROJECT: GRANADA HILLS POOL AND BATHHOUSE REPLACEMENT PROJECT
ADDRESS: 16730 CHATSWORTH STREET GRANADA HILLS, CA 91344

WORK ORDER NO. #E170517
PLAN FILE NO. #308
DRAWING NO. A4.10
SHEET OF SHEETS

PLOTTED:8/18/2020 1:21:02 PM

THE CITY OF LOS ANGELES OR ITS OFFICERS OR AGENTS SHALL NOT BE RESPONSIBLE FOR THE ACCURACY OR COMPLETENESS OF ELECTRONIC COPIES OF THIS PLAN SHEET.

TTLB TEMPLATE REVISION DATE: 02/2013
SHEET ISSUE DATE: 02/16/10
FILE PATH: BIM 360://Granada Hills Pool Renovation/A_Granada-Hills_2017.rvt

REVISION DATES (DESIGN STAGE ONLY)

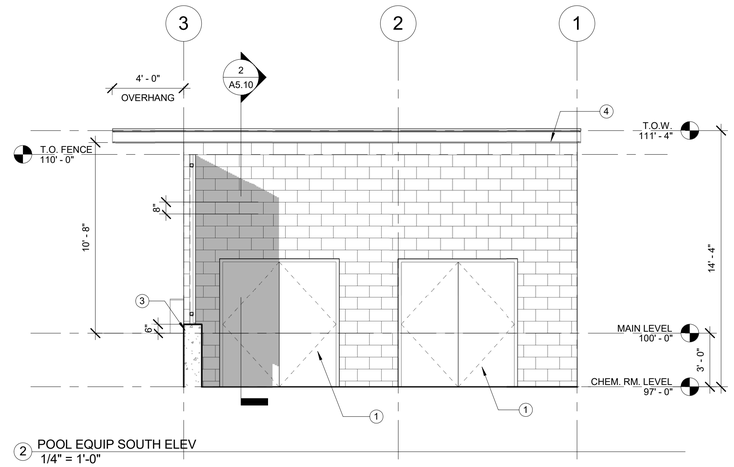

2 POOL EQUIP SOUTH ELEV
1/4" = 1'-0"

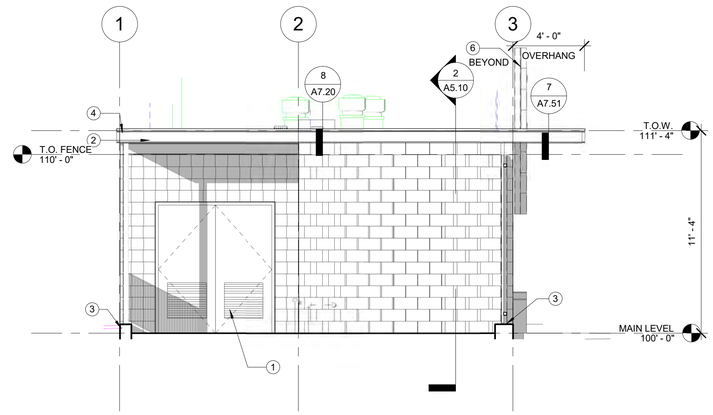

1 POOL EQUIP NORTH ELEV
1/4" = 1'-0"

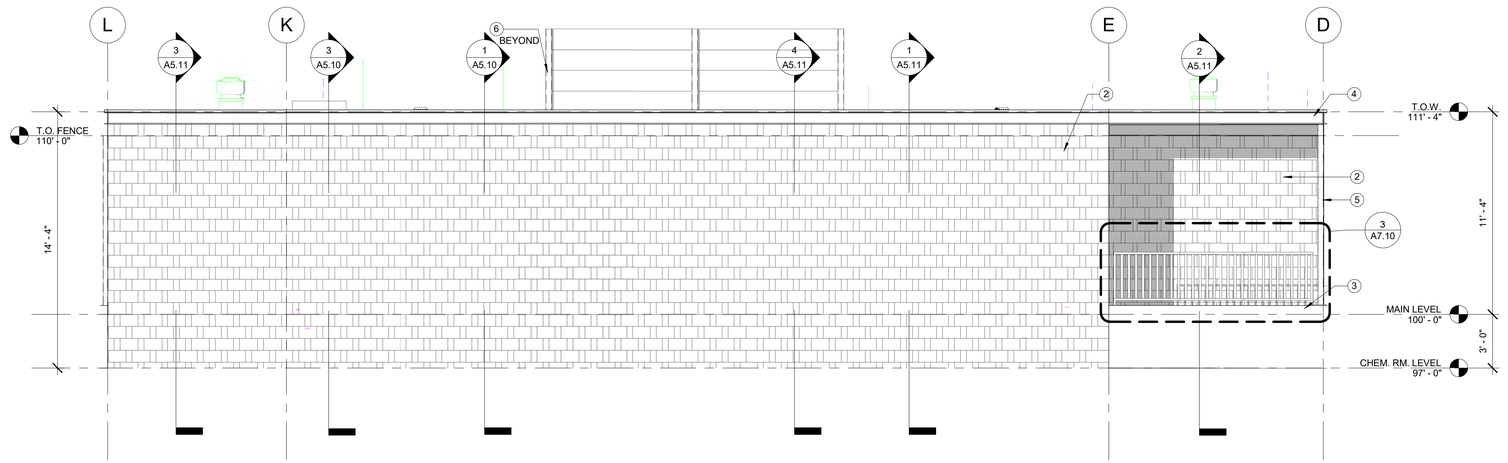

3 POOL EQUIP EAST ELEV
1/4" = 1'-0"

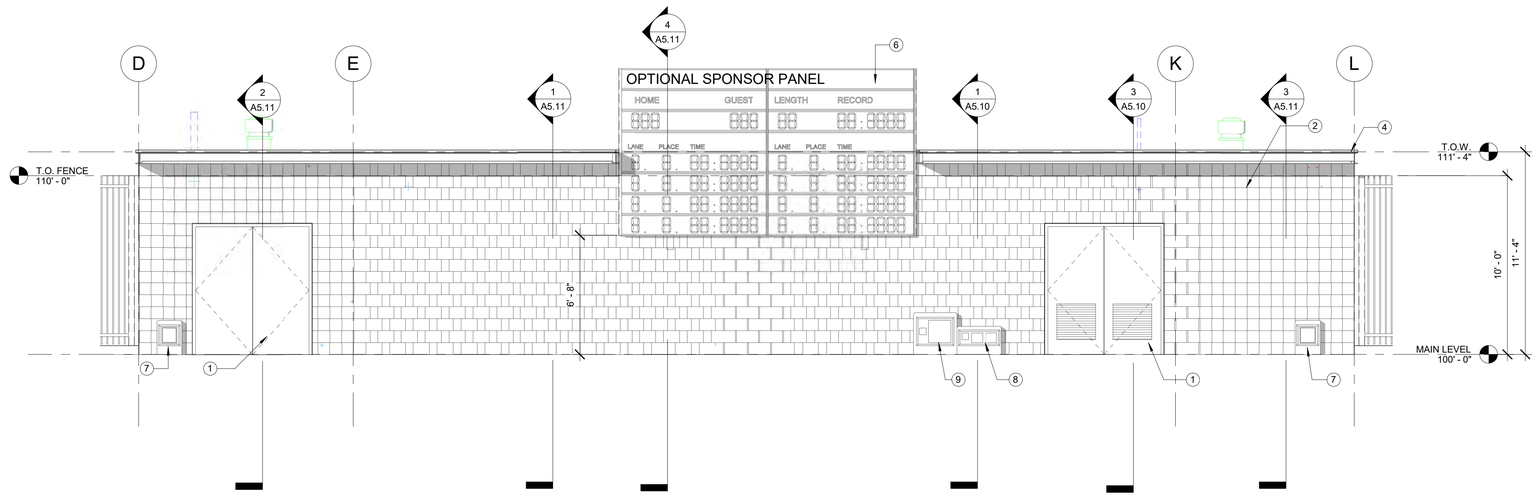

4 POOL EQUIP WEST ELEV
1/4" = 1'-0"

KEYNOTE LEGEND

1 (N) DOOR, SEE DOOR SCHEDULE SHEET A8.10 FOR MORE INFO.
2 (N) BLOCK WALL, SEE SHEETS A5.10 & A5.11 FOR WALL SECTIONS.. S.S.D. FOR MORE INFO.
3 (N) CONC. RETAINING WALL / CURB.
4 (N) STEEL CHANNEL AT PERIMETER. SEE WALL SECTION SHEETS FOR MORE INFO.
5 (E) STEEL COLUMN TO REMAIN, PROTECT. PAINT PER SCHEDULE
6 (N) WALL MOUNTED SCOREBOARD UNDER SEPARATE PERMIT. S.AQ.D. & S.S.D. FOR MORE INFO.
7 (N) HOSE BIBB CONC. PEDESTAL, S.AQ.D. FOR SIZE & REINFORCEMENT. IT IS ACCEPTABLE TO RECESS BOX WITHIN AN ADJACENT NEW BUILDING WALL, G.C. RESPONSIBLE FOR COORDINATING ALL COMPONENTS.
8 (N) UNDERWATER LIGHTING JUNCTION BOX CONC. PEDESTAL, S.AQ.D. FOR SIZE & REINFORCEMENT. IT IS ACCEPTABLE TO RECESS BOX WITHIN AN ADJACENT NEW BUILDING WALL, G.C. RESPONSIBLE FOR COORDINATING ALL COMPONENTS.
9 (N) SCOREBOARD TIMING SYSTEM JUNCTION BOX CONC. PEDESTAL, S.AQ.D. FOR SIZE & REINFORCEMENT. IT IS ACCEPTABLE TO RECESS BOX WITHIN AN ADJACENT NEW BUILDING WALL, G.C. RESPONSIBLE FOR COORDINATING ALL COMPONENTS.

BUREAU OF ENGINEERING
OFFICIAL RECORD

ENGINEERING
CITY OF LOS ANGELES

BUREAU OF ENGINEERING

NO.	REVISION DESCRIPTION	DATE	BY

BUILDING NO. -
INDEX NO. RP-300118

LICENSED ARCHITECT
JOHN P. SPARANO
No. C-26244
EXP. 1-30-21
STATE OF CALIFORNIA

DEPARTMENT OF PUBLIC WORKS
GARY LEE MOORE, PE, ENV SP
CITY ENGINEER

		DATE:
ARCHITECTURAL DIVISION		
ARCHITECT/ENGINEER:	JOHN SPARANO LIC. NO.: C-26244	03/03/20
DESIGNED BY:	SPARANO + MOONEY ARCHITECTURE	03/03/20
DRAWN BY:	JORGE BELTRAN	03/03/20
CHECKED BY:	LUDWING JUAREZ	03/03/20
APPROVED BY:		03/03/20

CITY OF LOS ANGELES
BID SET
PROJECT ISSUE DATE: 06/22/21

VERTICAL CONTROL:
HORIZONTAL CONTROL:
SHEET TITLE: ENLARGED EXTERIOR ELEVATIONS

PROJECT: GRANADA HILLS POOL AND BATHHOUSE REPLACEMENT PROJECT
ADDRESS: 16730 CHATSWORTH STREET GRANADA HILLS, CA 91344

WORK ORDER NO. #E170517
PLAN FILE NO. #308
DRAWING NO. A4.11
SHEET OF SHEETS

PLOTTED:8/18/2020 1:21:20 PM

REVISION DATES: (DESIGN STAGE ONLY)

TTLB TEMPLATE REVISION DATE: 02/2013
SHEET ISSUE DATE: 01/04/18
FILE PATH: BIM 360://Granada Hills Pool Renovation/A_Granada-Hills_2017.rvt

THE CITY OF LOS ANGELES OR ITS OFFICERS OR AGENTS SHALL NOT BE RESPONSIBLE FOR THE ACCURACY OR COMPLETENESS OF ELECTRONIC COPIES OF THIS PLAN SHEET.

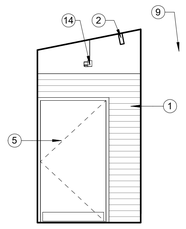

4 LOBBY/ENTRY NORTH
1/4" = 1'-0"

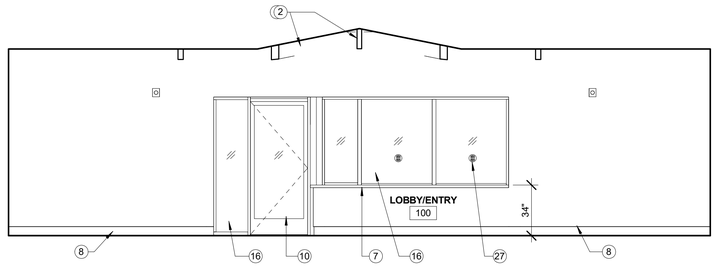

3 LOBBY/ENTRY EAST
1/4" = 1'-0"

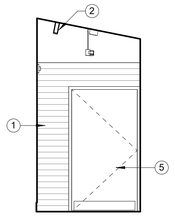

2 LOBBY/ENTRY SOUTH
1/4" = 1'-0"

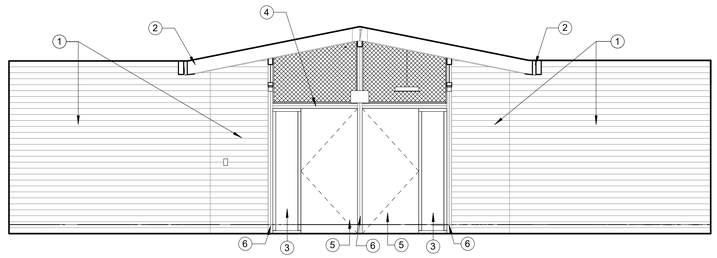

1 LOBBY/ENTRY WEST
1/4" = 1'-0"

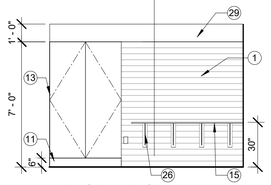

10 FIRST AID EAST
1/4" = 1'-0"

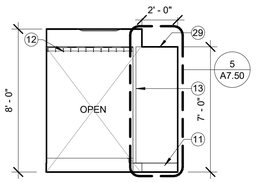

9 FIRST AID NORTH
1/4" = 1'-0"

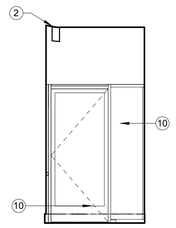

8 HALL WEST
1/4" = 1'-0"

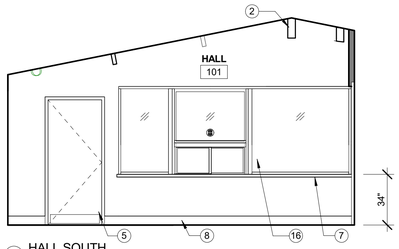

7 HALL SOUTH
1/4" = 1'-0"

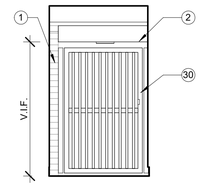

6 HALL EAST
1/4" = 1'-0"

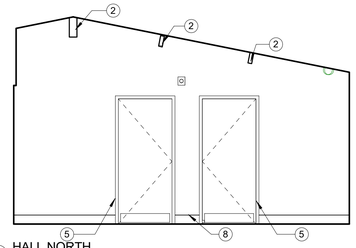

5 HALL NORTH
1/4" = 1'-0"

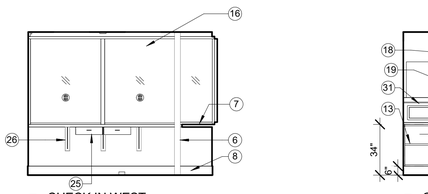

16 CHECK IN WEST
1/4" = 1'-0"

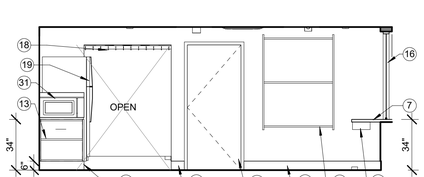

15 CHECK-IN SOUTH
1/4" = 1'-0"

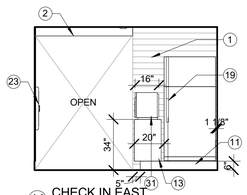

14 CHECK IN EAST
1/4" = 1'-0"

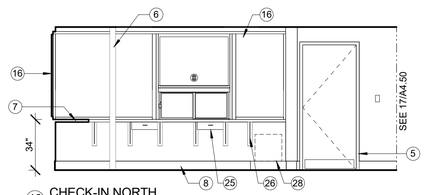

13 CHECK-IN NORTH
1/4" = 1'-0"

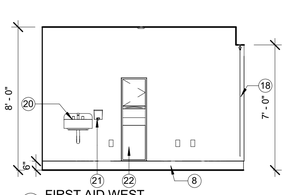

12 FIRST AID WEST
1/4" = 1'-0"

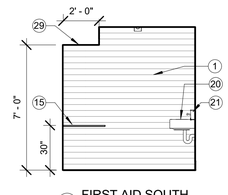

11 FIRST AID SOUTH
1/4" = 1'-0"

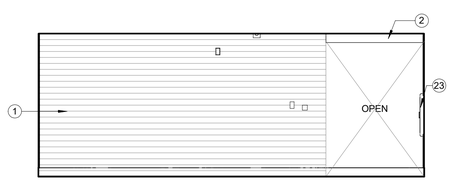

20 LIFEGUARD WEST
1/4" = 1'-0"

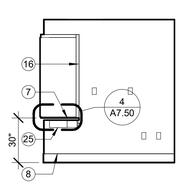

19 LIFEGUARD SOUTH
1/4" = 1'-0"

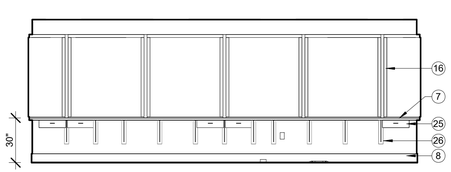

18 LIFEGUARD EAST
1/4" = 1'-0"

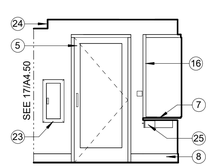

17 LIFEGUARD NORTH
1/4" = 1'-0"

KEYNOTE LEGEND

1. (E) BRICK WALL TO REMAIN EXPOSED. CLEAN TO REMOVE EFFLORESCENCE AND SEAL PER SPECIFICATIONS.
2. (E) WOOD BEAM TO REMAIN, PROTECT. PAINT PER FINISH SCHEDULE TYP, UNO.
3. (N) H.M. SIDE PANEL TO MATCH (N) DOOR. SEE DOOR SCHEDULE SHEET A8.10 FOR MORE INFO.
4. (E) STEEL FRAMING TO REMAIN, PROTECT. PAINT PER SCHEDULE.
5. (N) DOOR, SEE DOOR SCHEDULE SHEET A8.10 FOR MORE INFO.
6. (E) STEEL COLUMN TO REMAIN, PROTECT. PAINT PER SCHEDULE
7. (N) 34" HIGH S.S. COUNTER TOP, SEE DETAIL 5/A7.50 FOR MORE INFO.
8. (N) CONC. CURB BASE, SEE SLAB CONTROL PLAN SHEET A2.16 FOR MORE INFO.
9. (N) NEW TYPE 'G2' WALL ABOVE BRICK WALL.
10. (N) ALUMINUM GLAZED NARROW STILE DOOR STOREFRONT SYSTEM. SEE SHEET A8.12 FOR MORE INFO.
11. (N) 6" CONC. EQUIPMENT PAD. S.S.D. AND SEE SLAB CONTROL PLAN SHEET A2.16 FOR MORE INFO.
12. (N) EXTRUDED ALUM CURTAIN TRACK. BASIS OF DESIGN: INPRO NANOTRAC CUBICLE TRACK CE7000
13. (N) CASEWORK
14. (N) LIGHT FIXTURE. S.E.D.
15. (N) 30" MAX. HEIGHT "FIRST AID" STAINLESS STEEL COUNTER TOP W/ BACKSPLASH EXAM TABLE.
16. (N) GLAZED ALUM. FRAMED STOREFONT SYSTEM, SEE SHEET A8.12 FOR MORE INFO.
17. (N) WALL MOUNTED GARMENT CHECK BAG RACK.
18. (N) FIRST AID PRIVACY CURTAIN AND CURTAIN TRACK PER SPECS.
19. (N) REFRIGERATOR. N.I.C.
20. (N) LAVATORY W/ "TRUBO LAVSHIELD" PROTECTIVE ENCLOSURE. HOT WATER AND DRAIN PIPES UNDER ACCESSIBLE LAVATORIES SHALL BE INSULATED OR OTHERWISE COVERED. THERE SHALL BE NO SHARP OR ABRASIVE SURFACES UBDER LAVATORIES. S.P.D. AND SHEET G0.40 FOR MORE INFO.
21. (N) SOAP DISPENSER PER ACCESSORY SCHEDULE.SEE SHEET G0.40 FOR MORE INFO.
22. (N) SURFACE MOUNTED S.S. COMBINATION PAPER TOWEL DISPENSER/ WASTE RECEPTACLE.
23. (N) RECESSED WALL MOUNTED FIRE EXTINGUISHER CABINET.
24. (E) WOOD BEAM TO REMAIN, PROTECT IN PLACE & BOX OUT FOR CEM. PLASTER FIN. MATCHING WIDTH OF (E) WALL.
25. (N) SOLID PHENOLIC DRAWER W/ S.S. MOUNTING & HARDWARE -TYP.
26. (N) CUSTOM S.S. CORBEL W/ 1/4" THICK PLATES @ 24" MAX. SPACING. -TYP.
27. (N) STAINLESS STEEL "SPEAK-THRU"-TYP. SEE SHEET A8.12 FOR MORE INFO.
28. (N) CONC. BASE FOR SAFE VAULT. SAFE VAULT TO BE PER LADPR SPECIFICATIONS.
29. (N) GYP. BRD. SOFFIT. SEE REFELCETD CEILING PLAN FOR MORE INFO.
30. (N) TUBE STEEL GATE TO REMAIN OPEN DURING BUSINESS HOURS.
31. (N) MICROWAVE. N.I.C.

GENERAL NOTES

1. ALL DIMENSIONS TO BE VERIFIED IN FIELD.
2. SEE SHEET A3.12 FOR TOILET STALLS AND ACCESSORIES INFORMATION.
3. SEE SHEET G0.40 FOR ACCESSORY SCHEDULE AND MOUNTING DIAGRAMS.
4. SEE SHEETS G0.40 AND G0.41 FOR ACCCESSIBILITY NOTES AND DIAGRAMS.
5. SEE SHEET A7.00 FOR WALL TYPE INFO.
6. S.S.D. FOR ADDITIONAL NEW WALL INFO.
7. ALL NEW CONCRETE SLABS TO BE MEDIUM BROOM FINISH.
8. SEE SHEET A2.13 FOR SLAB , CURB CONTROL PLAN, FLOOR DRAIN AND SLOPE DIRECTION.
9. SEE SHEET A2.13 FOR DEPRESS FLOOR AREAS FOR TILE INSTALLATION.
10. SEE SHEET A8.50 FOR TILE INFORMATION.
11. SEE SHEET A8.50 FOR FINISH LEGEND INFORMATION.
12. ALL TOILET PARTITIONS TO HAVE OVERHEAD BRACING.
13. TOWEL PIN TO BE SURFACE MOUNTED (1) PER SHOWER STALL DOOR.
14. ALL CHANGING STALLS TO RECEIVE (1) SURFACE MOUNTED TOWEL AND (1) SURFACE MOUNTED CLOTHES HOOK PER CHANGING STALL.

BUREAU OF ENGINEERING
OFFICIAL RECORD

THE CITY OF LOS ANGELES OR ITS OFFICERS OR AGENTS SHALL NOT BE RESPONSIBLE FOR THE ACCURACY OR COMPLETENESS OF ELECTRONIC COPIES OF THIS PLAN SHEET.

TTLB TEMPLATE REVISION DATE: 02/2013
SHEET ISSUE DATE: 01104/18
FILE PATH: BIM 360://Granada Hills Pool Renovation/A_Granada-Hills_2017.rvt

REVISION DATES (DESIGN STAGE ONLY)

BUREAU OF ENGINEERING
DEPARTMENT OF PUBLIC WORKS
CITY OF LOS ANGELES

ENGINEERING
CITY OF LOS ANGELES

NO.	REVISION DESCRIPTION	DATE	BY

BUILDING NO. -
INDEX NO. RP-300118

LICENSED ARCHITECT
JOHN P. SPARANO
No. C-26244
EXP. 1-30-21
STATE OF CALIFORNIA

GARY LEE MOORE, PE, ENV SP
CITY ENGINEER

		DATE:
ARCHITECTURAL DIVISION		
ARCHITECT/ENGINEER:	JOHN SPARANO	LIC. NO.: C-26244
DESIGNED BY:	SPARANO + MOONEY ARCHITECTURE	03/03/20
DRAWN BY:	JORGE BELTRAN	03/03/20
CHECKED BY:	LUDWING JUAREZ	03/03/20
APPROVED BY:		03/03/20

CITY OF LOS ANGELES
BID SET
PROJECT ISSUE DATE: 06/22/21

VERTICAL CONTROL:
HORIZONTAL CONTROL:

SHEET TITLE: INTERIOR ELEVATIONS

PROJECT: GRANADA HILLS POOL AND BATHHOUSE REPLACEMENT PROJECT
ADDRESS: 16730 CHATSWORTH STREET GRANADA HILLS, CA 91344

WORK ORDER NO. #E170517
PLAN FILE NO. #308
DRAWING NO. A4.50
SHEET 0 OF SHEETS

PLOTTED:8/18/2020 1:21:33 PM

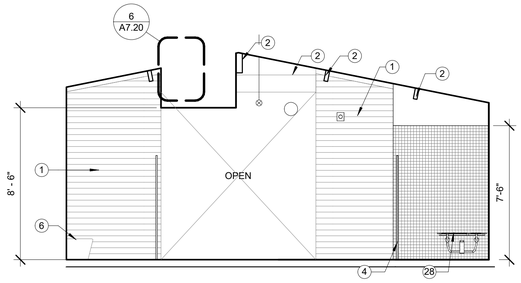

5 CHANGING NORTH
1/4" = 1'-0"

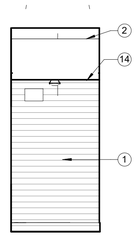

4 VESTIBULE WEST
1/4" = 1'-0"

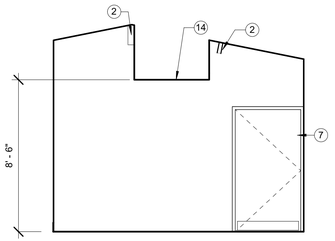

3 VESTIBULE SOUTH
1/4" = 1'-0"

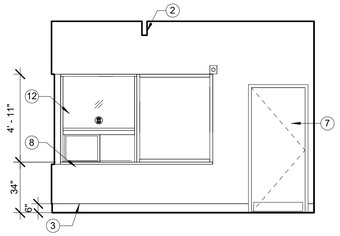

2 VESTIBULE EAST
1/4" = 1'-0"

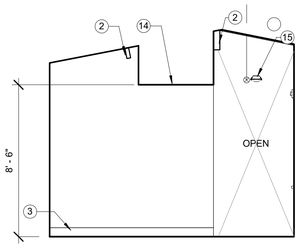

1 VESTIBULE NORTH
1/4" = 1'-0"

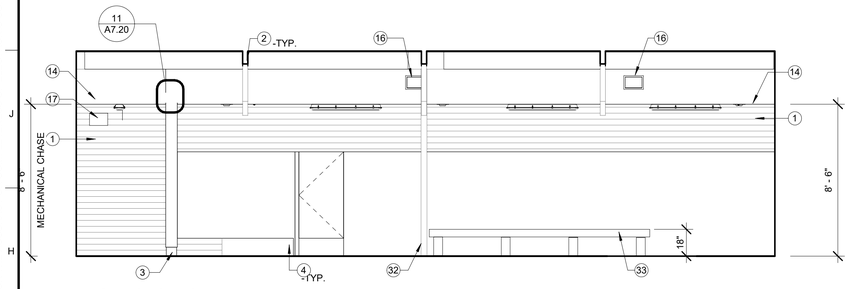

8 CHANGING WEST
1/4" = 1'-0"

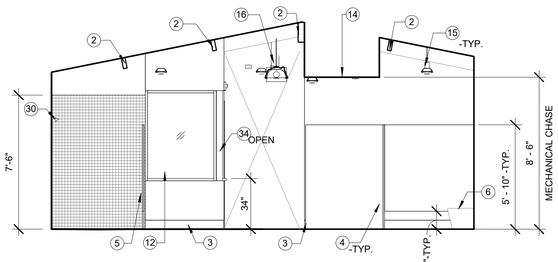

7 CHANGING SOUTH
1/4" = 1'-0"

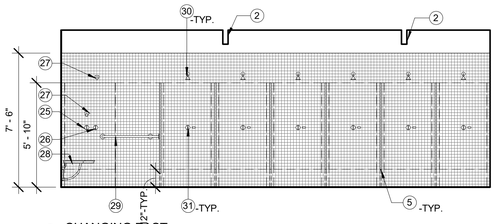

6 CHANGING EAST
1/4" = 1'-0"

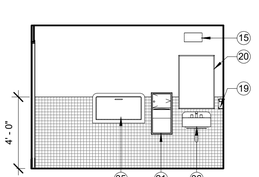

16 FAM/UNISEX WEST
1/4" = 1'-0"

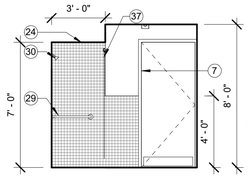

15 FAM/UNISEX SOUTH
1/4" = 1'-0"

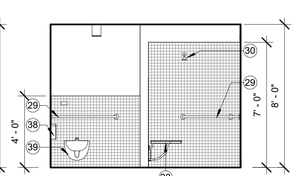

14 FAM/UNISEX EAST
1/4" = 1'-0"

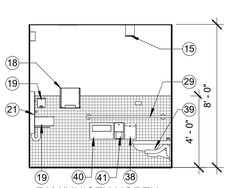

13 FAM/UNISEX NORTH
1/4" = 1'-0"

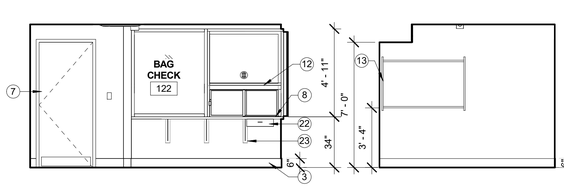

12 BAG CHECK WEST
1/4" = 1'-0"

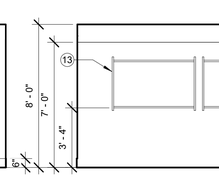

11 BAG CHECK SOUTH
1/4" = 1'-0"

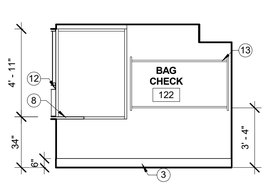

10 BAG CHECK EAST
1/4" = 1'-0"

9 BAG CHECK NORTH
1/4" = 1'-0"

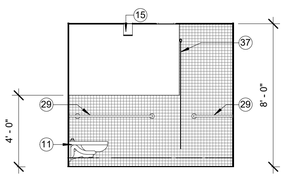

24 STAFF RR WEST
1/4" = 1'-0"

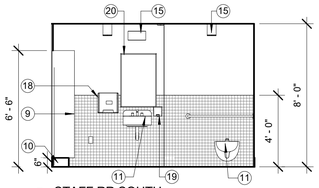

23 STAFF RR SOUTH
1/4" = 1'-0"

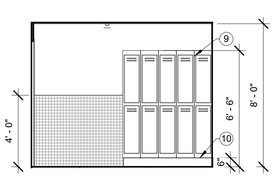

22 STAFF RR EAST
1/4" = 1'-0"

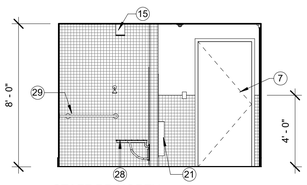

21 STAFF RR NORTH
1/4" = 1'-0"

KEYNOTE LEGEND

1 (E) BRICK WALL TO REMAIN EXPOSED. CLEAN TO REMOVE EFFLORESCENCE AND SEAL PER SPECIFICATIONS.
2 (E) WOOD BEAM TO REMAIN, PROTECT. PAINT PER FINISH SCHEDULE TYP, UNO.
3 (N) CONC. CURB BASE, SEE SLAB CONTROL PLAN SHEET A2.16 FOR MORE INFO.
4 (N) FLOOR BRACED SOLID PHENOLIC CHANGING STALL PARTITION.
5 (N) FLOOR BRACED SOLID PHENOLIC SHOWER PARTITION
6 (E) CONCRETE BENCH TO REMAIN, PROTECT.
7 (N) DOOR, SEE DOOR SCHEDULE SHEET A8.10 FOR MORE INFO.
8 (N) 34" HIGH S.S. COUNTER TOP, SEE DETAIL 5/A7.50 FOR MORE INFO.
9 (N) 2-TIER SOLID PHENOLIC LOCKERS ON 6" HEIGHT EQUIPMENT PAD. AT LEAST 5% OF LOCKERS TO FOLLOW REACH RANGES 15"TO 48" REACH AND 30"X48" CLEAR SPACE.
10 (N) 6" CONC. EQUIPMENT PAD. S.S.D. AND SEE SLAB CONTROL PLAN SHEET A2.16 FOR MORE INFO.
11 (N) PLUMBING FIXTURE. S.P.D.
12 (N) GLAZED ALUM. FRAMED STOREFONT SYSTEM, SEE SHEET A8.12 FOR MORE INFO.
13 (N) WALL MOUNTED GARMENT CHECK BAG RACK.
14 (N) MECHANICAL CHASE. TO BE PTD. PT-002.
15 (N) LIGHT FIXTURE. S.E.D.
16 MECH EQUIPMENT, S.M.D.
17 (N) EXIT SIGN. S.E.D. FOR MORE INFO.
18 (N) SURFACE MOUNTED ELECTRICAL HAND DRYER.S.E.D. FOR MORE INFO.
19 (N) SOAP DISPENSER PER ACCESSORY SCHEDULE.SEE SHEET G0.40 FOR MORE INFO.
20 (N) MIRROR PER ACCESSORY SCHEDULE. SEE SHEET G0.40 FOR MORE INFO.
21 (N) SURFACE MOUNTED S.S. COMBINATION PAPER TOWEL DISPENSER/ WASTE RECEPTACLE.
22 (N) SOLID PHENOLIC DRAWER W/ S.S. MOUNTING & HARDWARE -TYP.
23 (N) CUSTOM S.S. CORBEL W/ 1/4" THICK PLATES @ 24" MAX. SPACING. -TYP.
24 (N) GYP. BRD. SOFFIT. SEE REFELCETD CEILING PLAN FOR MORE INFO.
25 (N) SHOWER LEVEL TROL LEVER DIVERTER WITH VOLUME CONTROL. SEE ADA SHOWER NOTES ON SHEET G0.40 FOR MORE INFO.
26 (N) SHOWER CONCEALED VOLUME CONTROL VALVE. SEE ADA SHOWER NOTES ON SHEET G0.40 FOR MORE INFO.
27 (N) FREE-FLOW SHOWER HEAD @ 76" A.F.F. AND 48" A.F.F. RESPECTIVELY. SEE ADA SHOWER NOTES ON SHEET G0.40 FOR MORE INFO.
28 (N) REVERSIBLE SOLID PHENOLIC ADA FOING SHOWER SEAT.
29 (N) 1 1/2" DIAM. H.C. GRAB BAR W/ CONCEALED MOUNTING. SEE ACCESSORY MOUNTING AND SCHEDULE ON SHEET SHEET G0.40 FOR MORE INFO.
30 (N) SHOWER HEAD.
31 (N) SHOWER CONTROL AREA/ DISH SOAP.
32 (E) STEEL COLUMN TO REMAIN, PROTECT. PAINT PER SCHEDULE
33 (N) CAST-IN PLACE CONCRETE BENCH.S.S.D. FOR REINF.
34 (N) TUBE STEEL COLUMN. S.S.D. PAINT PER SCHEDULE.
35 (N) HORIZONTAL WALL MOUNTED BABY CHANGING STATION.SEE SHEET G0.30 FOR MORE INFO.
36 (N) LAVATORY W/ "TRUBO LAVSHIELD" PROTECTIVE ENCLOSURE. HOT WATER AND DRAIN PIPES UNDER ACCESSIBLE LAVATORIES SHALL BE INSULATED OR OTHERWISE COVERED, THERE SHALL BE NO SHARP OR ABRASIVE SURFACES UBDER LAVATORIES. S.P.D. AND SHEET G0.40 FOR MORE INFO.
37 (N) HEAVY DUTY VINYL SHOWER CURTAIN. SEE SHEET G0.40 FOR CURTAIN,HOOKS AND CURTAIN ROD INFO.
38 (N) WALL MOUNTED SANITARY NAPKIN DISPOSAL.
39 (N) WATER CLOSET. S.P.D. AND SHEET G0.40 FOR MORE INFO.
40 (N) SURFACE MOUNTED S.S. SEAT COVER DISPENSER. ONE PER WATER CLOSET. SEE ACCESSORY MOUNTING AND SCHEDULE ON SHEET SHEET G0.40 FOR MORE INFO.
41 (N) SURFACE MOUNTED S.S. TOILET PAPER DISPENSER. ONE PER WATER CLOSET SEE ACCESSORY MOUNTING AND SCHEDULE ON SHEET SHEET G0.40 FOR MORE INFO.

KEYNOTE LEGEND (CONTINUED)

GENERAL NOTES

1. ALL DIMENSIONS TO BE VERIFIED IN FIELD.
2. SEE SHEET A3.12 FOR TOILET STALLS AND ACCESSORIES INFORMATION.
3. SEE SHEET G0.40 FOR ACCESSORY SCHEDULE AND MOUNTING DIAGRAMS.
4. SEE SHEETS G0.40 AND G0.41 FOR ACCESSIBILITY NOTES AND DIAGRAMS.
5. SEE SHEET A7.00 FOR WALL TYPE INFO.
6. S.S.D. FOR ADDITIONAL NEW WALL INFO.
7. ALL NEW CONCRETE SLABS TO BE MEDIUM BROOM FINISH.
8. SEE SHEET A2.13 FOR SLAB , CURB CONTROL PLAN, FLOOR DRAIN AND SLOPE DIRECTION.
9. SEE SHEET A2.13 FOR DEPRESS FLOOR AREAS FOR TILE INSTALLATION.
10. SEE SHEET A8.50 FOR TILE INFORMATION.
11. SEE SHEET A8.50 FOR FINISH LEGEND INFORMATION.
12. ALL TOILET PARTITIONS TO HAVE OVERHEAD BRACING.
13. TOWEL PIN TO BE SURFACE MOUNTED (1) PER SHOWER STALL DOOR.
14. ALL CHANGING STALLS TO RECEIVE (1) SURFACE MOUNTED TOWEL AND (1) SURFACE MOUNTED CLOTHES HOOK PER CHANGING STALL.

THE CITY OF LOS ANGELES OR ITS OFFICERS OR AGENTS SHALL NOT BE RESPONSIBLE FOR THE ACCURACY OR COMPLETENESS OF ELECTRONIC COPIES OF THIS PLAN SHEET.

TTLB TEMPLATE REVISION DATE: 02/2013
SHEET ISSUE DATE: 01/04/18
FILE PATH: BIM 360://Granada Hills Pool Renovation/A_Granada-Hills_2017.rvt

REVISION DATES (DESIGN STAGE ONLY)

BUREAU OF ENGINEERING
OFFICIAL RECORD

LICENSED ARCHITECT
JOHN P. SPARANO
No. C-26244
EXP. 1-30-21
STATE OF CALIFORNIA

BUREAU OF ENGINEERING
ENGINEERING
CITY OF LOS ANGELES

NO.	REVISION DESCRIPTION	DATE	BY

BUILDING NO. -
INDEX NO. RP-300118

DEPARTMENT OF PUBLIC WORKS
CITY OF LOS ANGELES

GARY LEE MOORE, PE, ENV SP
CITY ENGINEER

	DATE:
ARCHITECTURAL DIVISION	03/03/20
ARCHITECT/ENGINEER: JOHN SPARANO LIC. NO.: C-26244	03/03/20
DESIGNED BY: SPARANO + MOONEY ARCHITECTURE	03/03/20
DRAWN BY: JORGE BELTRAN	03/03/20
CHECKED BY: LUDWING JUAREZ	03/03/20
APPROVED BY:	

BID SET
PROJECT ISSUE DATE: 06/22/21

VERTICAL CONTROL:
HORIZONTAL CONTROL:

SHEET TITLE: INTERIOR ELEVATIONS

PROJECT: GRANADA HILLS POOL AND BATHHOUSE REPLACEMENT PROJECT

ADDRESS: 16730 CHATSWORTH STREET GRANADA HILLS, CA 91344

WORK ORDER NO. #E170517
PLAN FILE NO. #308
DRAWING NO. A4.51
SHEET OF SHEETS

PLOTTED:8/18/2020 1:21:47 PM

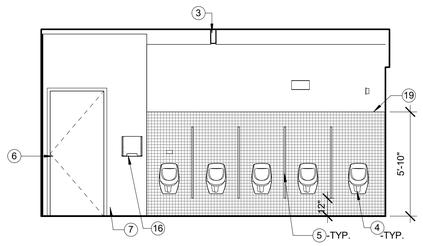

4 MEN'S ENTRY WEST
1/4" = 1'-0"

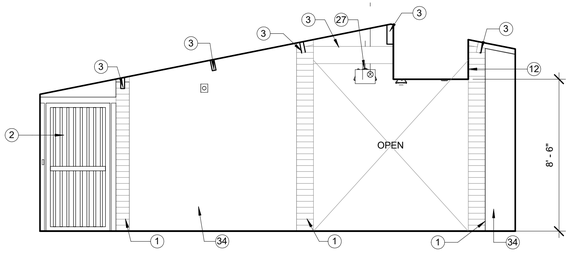

3 MEN'S ENTRY SOUTH
1/4" = 1'-0"

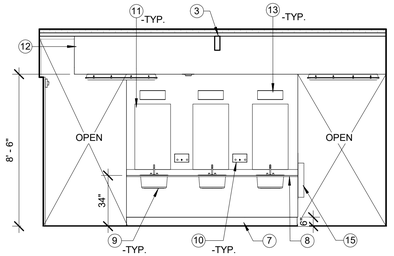

2 MEN'S ENTRY EAST
1/4" = 1'-0"

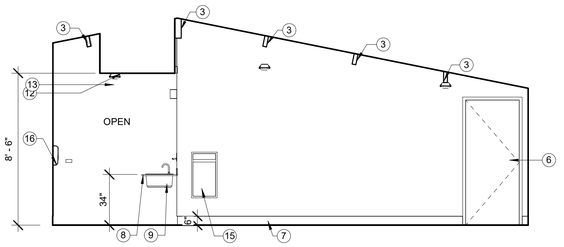

1 MEN'S ENTRY NORTH
1/4" = 1'-0"

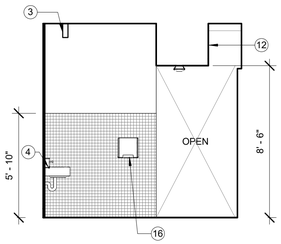

8 MEN'S RR WEST
1/4" = 1'-0"

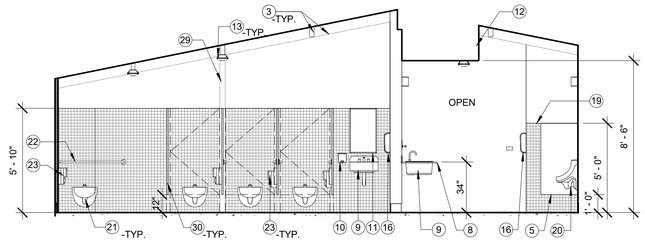

7 MEN'S RR SOUTH
1/4" = 1'-0"

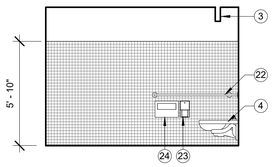

6 MEN'S RR EAST
1/4" = 1'-0"

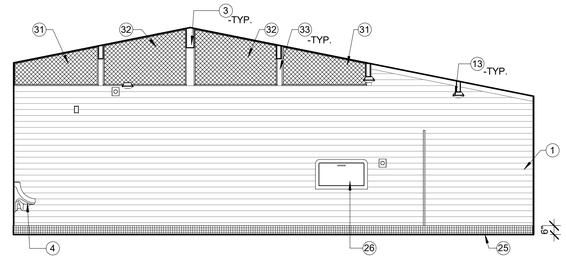

5 MEN'S RR NORTH
1/4" = 1'-0"

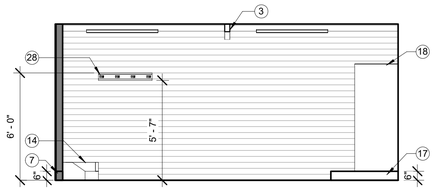

12 MEN'S JAN WEST
1/4" = 1'-0"

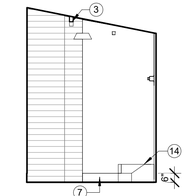

11 MEN'S JAN SOUTH
1/4" = 1'-0"

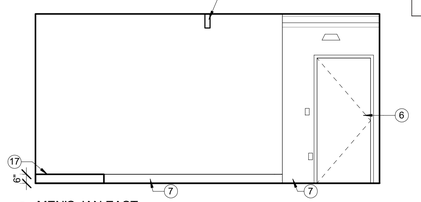

10 MEN'S JAN EAST
1/4" = 1'-0"

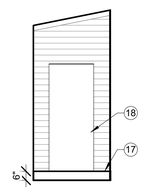

9 MEN'S JAN NORTH
1/4" = 1'-0"

KEYNOTE LEGEND

1 (E) BRICK WALL TO REMAIN EXPOSED. CLEAN TO REMOVE EFFLORESCENCE AND SEAL PER SPECIFICATIONS.
2 (N) TUBE STEEL GATE TO REMAIN OPEN DURING BUSINESS HOURS.
3 (E) WOOD BEAM TO REMAIN, PROTECT. PAINT PER FINISH SCHEDULE TYP, UNO.
4 (N) PLUMBING FIXTURE. S.P.D.
5 (N) SOLID PHENOLIC WALL-HUNG URINAL SCREEN.
6 (N) DOOR, SEE DOOR SCHEDULE SHEET A8.10 FOR MORE INFO.
7 (N) CONC. CURB BASE, SEE SLAB CONTROL PLAN SHEET A2.16 FOR MORE INFO.
8 (N) 34" H.S.S. COUNTER TOP W/ LAVATORIES. S.P.D. AND SHEET G0.40 FOR MORE INFO.
9 (N) LAVATORY W/ "TRUBO LAVSHIELD" PROTECTIVE ENCLOSURE. HOT WATER AND DRAIN PIPES UNDER ACCESSIBLE LAVATORIES SHALL BE INSULATED OR OTHERWISE COVERED, THERE SHALL BE NO SHARP OR ABRASIVE SURFACES UBDER LAVATORIES. S.P.D. AND SHEET G0.40 FOR MORE INFO.
10 (N) SOAP DISPENSER PER ACCESSORY SCHEDULE.SEE SHEET G0.40 FOR MORE INFO.
11 (N) MIRROR PER ACCESSORY SCHEDULE. SEE SHEET G0.40 FOR MORE INFO.
12 (N) MECHANICAL CHASE. TO BE PTD. PT-002.
13 (N) LIGHT FIXTURE. S.E.D.
14 (N) FLOOR MOUNTED MOP SINK.
15 (N) WALL MOUNTED RECESSED WASTE RECEPTACLE.
16 (N) SURFACE MOUNTED ELECTRICAL HAND DRYER.S.E.D. FOR MORE INFO.
17 (N) 6" CONC. EQUIPMENT PAD. S.S.D. AND SEE SLAB CONTROL PLAN SHEET A2.16 FOR MORE INFO.
18 (N) WATER HEATER.
19 (N) TILE WAINSCOT.
20 (N) SURFACE MOUNTED URINAL. S.P.D. SEE SHEET G0.40 FOR MORE INFO.
21 (N) WATER CLOSET. S.P.D. AND SHEET G0.40 FOR MORE INFO.
22 (N) 1 1/2" DIAM. H.C. GRAB BAR W/ CONCEALED MOUNTING. SEE ACCESSORY MOUNTING AND SCHEDULE ON SHEET SHEET G0.40 FOR MORE INFO.
23 (N) SURFACE MOUNTED S.S. TOILET PAPER DISPENSER. ONE PER WATER CLOSET SEE ACCESSORY MOUNTING AND SCHEDULE ON SHEET SHEET G0.40 FOR MORE INFO.
24 (N) SURFACE MOUNTED S.S. SEAT COVER DISPENSER. ONE PER WATER CLOSET. SEE ACCESSORY MOUNTING AND SCHEDULE ON SHEET SHEET G0.40 FOR MORE INFO.
25 (N) 6" HIGH TILE COVED BASE.
26 (N) HORIZONTAL WALL MOUNTED BABY CHANGING STATION.SEE SHEET G0.30 FOR MORE INFO.
27 MECH EQUIPMENT, S.M.D.
28 (N) STAINLESS STEEL SURFACE MOUNTED MOP AND BROOM HOLDER. BOBRICK B-223.
29 (E) STEEL COLUMN TO REMAIN, PROTECT. PAINT PER SCHEDULE
30 (N) FLOOR BRACED SOLID PHENOLIC TOILET PARTITION.
31 (N) S.S. WIRE MESH SECURITY SCREEN SYSTEM.
32 (E) WIRE MESH PANEL AND ASSOCIATED WOODEN FRAME TO BE REMOVED. (E) WIRE MESH TO BE REASSEMBLED WITH (N) WOODEN FRAME AND RE-INSTALLED IN ORIGINAL PLACE. ADJACENT STRUCTURE SUCH AS BRICK WALL, WOODEN COLUMNS AND ROOF TO BE PROTECTED DURING CONSTRUCTION. SEE DETAILS FOR MORE INFO.
33 (E) WOODEN COLUMN TO BE PRROTECTED DURING CONSTRUCTION.
34 (N) STUCCO TO MATCH (E). PTD-01

GENERAL NOTES

1. ALL DIMENSIONS TO BE VERIFIED IN FIELD.
2. SEE SHEET A3.12 FOR TOILET STALLS AND ACCESSORIES INFORMATION.
3. SEE SHEET G0.40 FOR ACCESSORY SCHEDULE AND MOUNTING DIAGRAMS.
4. SEE SHEETS G0.40 AND G0.41 FOR ACCCESSIBILITY NOTES AND DIAGRAMS.
5. SEE SHEET A7.00 FOR WALL TYPE INFO.
6. S.S.D. FOR ADDITIONAL NEW WALL INFO.
7. ALL NEW CONCRETE SLABS TO BE MEDIUM BROOM FINISH.
8. SEE SHEET A2.13 FOR SLAB , CURB CONTROL PLAN, FLOOR DRAIN AND SLOPE DIRECTION.
9. SEE SHEET A2.13 FOR DEPRESS FLOOR AREAS FOR TILE INSTALLATION.
10. SEE SHEET A8.50 FOR TILE INFORMATION.
11. SEE SHEET A8.50 FOR FINISH LEGEND INFORMATION.
12. ALL TOILET PARTITIONS TO HAVE OVERHEAD BRACING.
13. TOWEL PIN TO BE SURFACE MOUNTED (1) PER SHOWER STALL DOOR.
14. ALL CHANGING STALLS TO RECEIVE (1) SURFACE MOUNTED TOWEL AND (1) SURFACE MOUNTED CLOTHES HOOK PER CHANGING STALL.

BUREAU OF ENGINEERING
OFFICIAL RECORD

THE CITY OF LOS ANGELES OR ITS OFFICERS OR AGENTS SHALL NOT BE RESPONSIBLE FOR THE ACCURACY OR COMPLETENESS OF ELECTRONIC COPIES OF THIS PLAN SHEET.

TTLB TEMPLATE REVISION DATE: 02/2013
SHEET ISSUE DATE: 01/04/18
FILE PATH: BIM 360://Granada Hills Pool Renovation/A_Granada-Hills_2017.rvt

REVISION DATES (DESIGN STAGE ONLY)

BUREAU OF ENGINEERING
CITY OF LOS ANGELES

NO.	REVISION DESCRIPTION	DATE	BY

BUILDING NO. -
INDEX NO. RP-300118

LICENSED ARCHITECT
JOHN P. SPARANO
No. C-26244
EXP. 1-30-21
STATE OF CALIFORNIA

BID SET
PROJECT ISSUE DATE: 06/22/21

CITY OF LOS ANGELES
DEPARTMENT OF PUBLIC WORKS
BUREAU OF ENGINEERING
GARY LEE MOORE, PE, ENV SP
CITY ENGINEER

	DATE:
ARCHITECTURAL DIVISION	
ARCHITECT/ENGINEER: JOHN SPARANO LIC. NO.: C-26244	03/03/20
DESIGNED BY: SPARANO + MOONEY ARCHITECTURE	03/03/20
DRAWN BY: JORGE BELTRAN	03/03/20
CHECKED BY: LUDWING JUAREZ	03/03/20
APPROVED BY:	

VERTICAL CONTROL:
HORIZONTAL CONTROL:

SHEET TITLE: INTERIOR ELEVATIONS

PROJECT: GRANADA HILLS POOL AND BATHHOUSE REPLACEMENT PROJECT

ADDRESS: 16730 CHATSWORTH STREET GRANADA HILLS, CA 91344

WORK ORDER NO. #E170517
PLAN FILE NO. #308
DRAWING NO. A4.52
SHEET O F SHEETS

PLOTTED:8/18/2020 1:21:55 PM

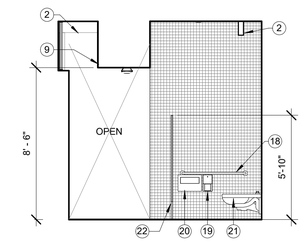

4 WOMEN'S RR WEST
1/4" = 1'-0"

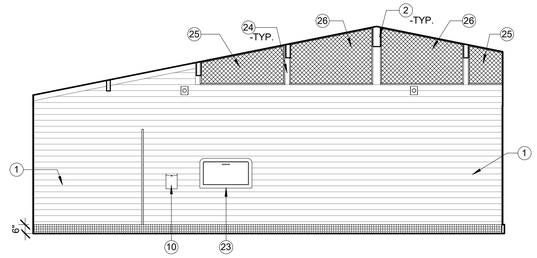

3 WOMEN'S RR SOUTH
1/4" = 1'-0"

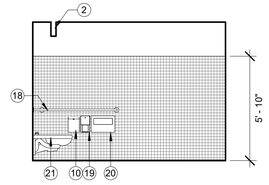

2 WOMEN'S RR EAST
1/4" = 1'-0"

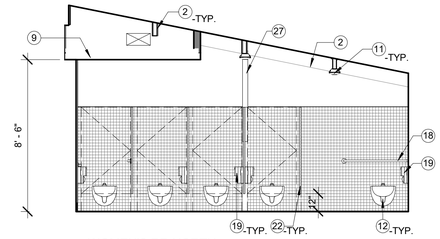

1 WOMEN'S RR NORTH
1/4" = 1'-0"

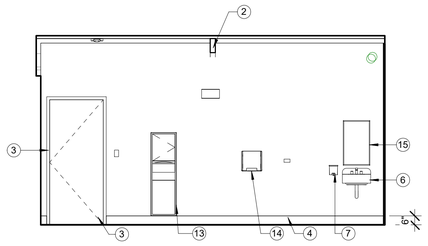

8 WOMEN'S RR ENTRY WEST
1/4" = 1'-0"

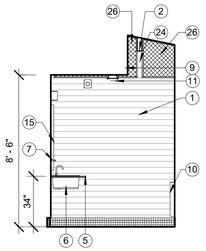

7 WOMEN'S RR ENTRY SOUTH
1/4" = 1'-0"

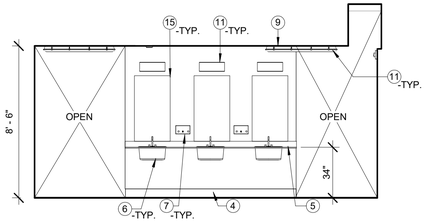

6 WOMEN'S RR ENTRY EAST
1/4" = 1'-0"

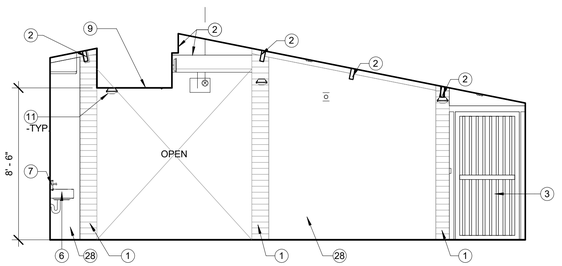

5 WOMEN'S RR ENTRY NORTH
1/4" = 1'-0"

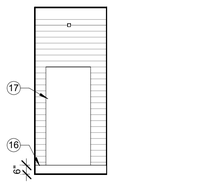

16 JANITOR'S CLOSET WEST
1/4" = 1'-0"

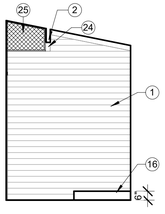

15 JANITOR'S CLOSET SOUTH
1/4" = 1'-0"

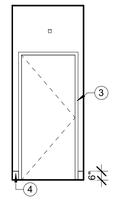

14 JANITOR'S CLOSET EAST
1/4" = 1'-0"

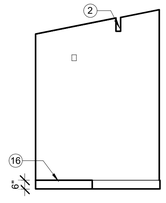

13 JANITOR'S CLOSET NORTH
1/4" = 1'-0"

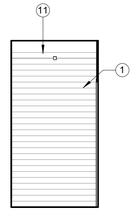

12 COMMUNICATIONS ROOM WEST
1/4" = 1'-0"

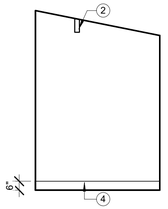

11 COMMUNICATIONS ROOM SOUTH
1/4" = 1'-0"

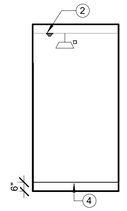

10 COMMUNICATIONS ROOM EAST
1/4" = 1'-0"

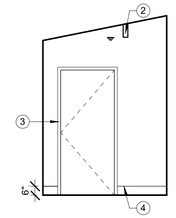

9 COMMUNICATIONS ROOM NORTH
1/4" = 1'-0"

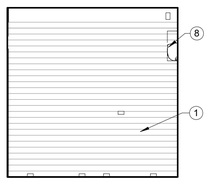

20 ELEC WEST
1/4" = 1'-0"

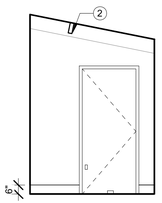

19 ELEC SOUTH
1/4" = 1'-0"

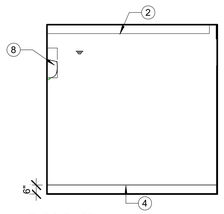

18 ELEC EAST
1/4" = 1'-0"

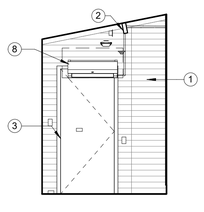

17 ELEC NORTH
1/4" = 1'-0"

KEYNOTE LEGEND

1 (E) BRICK WALL TO REMAIN EXPOSED. CLEAN TO REMOVE EFFLORESCENCE AND SEAL PER SPECIFICATIONS.
2 (E) WOOD BEAM TO REMAIN, PROTECT. PAINT PER FINISH SCHEDULE TYP, UNO.
3 (N) DOOR, SEE DOOR SCHEDULE SHEET A8.10 FOR MORE INFO.
4 (N) CONC. CURB BASE, SEE SLAB CONTROL PLAN SHEET A2.16 FOR MORE INFO.
5 (N) 34" H.S.S. COUNTER TOP W/ LAVATORIES. S.P.D. AND SHEET G0.40 FOR MORE INFO.
6 (N) LAVATORY W/ "TRUBO LAVSHIELD" PROTECTIVE ENCLOSURE. HOT WATER AND DRAIN PIPES UNDER ACCESSIBLE LAVATORIES SHALL BE INSULATED OR OTHERWISE COVERED, THERE SHALL BE NO SHARP OR ABRASIVE SURFACES UBDER LAVATORIES. S.P.D. AND SHEET G0.40 FOR MORE INFO.
7 (N) SOAP DISPENSER PER ACCESSORY SCHEDULE.SEE SHEET G0.40 FOR MORE INFO.
8 MECH EQUIPMENT, S.M.D.
9 (N) MECHANICAL CHASE. TO BE PTD. PT-002.
10 (N) WALL MOUNTED SANITARY NAPKIN DISPOSAL.
11 (N) LIGHT FIXTURE. S.E.D.
12 (N) PLUMBING FIXTURE. S.P.D.
13 (N) SURFACE MOUNTED S.S. COMBINATION PAPER TOWEL DISPENSER/ WASTE RECEPTACLE.
14 (N) SURFACE MOUNTED ELECTRICAL HAND DRYER.S.E.D. FOR MORE INFO.
15 (N) MIRROR PER ACCESSORY SCHEDULE. SEE SHEET G0.40 FOR MORE INFO.
16 (N) 6" CONC. EQUIPMENT PAD. S.S.D. AND SEE SLAB CONTROL PLAN SHEET A2.16 FOR MORE INFO.
17 (N) WATER HEATER.
18 (N) 1 1/2" DIAM. H.C. GRAB BAR W/ CONCEALED MOUNTING. SEE ACCESSORY MOUNTING AND SCHEDULE ON SHEET SHEET G0.40 FOR MORE INFO.
19 (N) SURFACE MOUNTED S.S. TOILET PAPER DISPENSER. ONE PER WATER CLOSET SEE ACCESSORY MOUNTING AND SCHEDULE ON SHEET SHEET G0.40 FOR MORE INFO.
20 (N) SURFACE MOUNTED S.S. SEAT COVER DISPENSER. ONE PER WATER CLOSET. SEE ACCESSORY MOUNTING AND SCHEDULE ON SHEET SHEET G0.40 FOR MORE INFO.
21 (N) WATER CLOSET. S.P.D. AND SHEET G0.40 FOR MORE INFO.
22 (N) FLOOR BRACED SOLID PHENOLIC TOILET PARTITION.
23 (N) HORIZONTAL WALL MOUNTED BABY CHANGING STATION.SEE SHEET G0.30 FOR MORE INFO.
24 (E) WOODEN COLUMN TO BE PRROTECTED DURING CONSTRUCTION.
25 (N) S.S. WIRE MESH SECURITY SCREEN SYSTEM.
26 (E) WIRE MESH PANEL AND ASSOCIATED WOODEN FRAME TO BE REMOVED. (E) WIRE MESH TO BE REASSEMBLED WITH (N) WOODEN FRAME AND RE-INSTALLED IN ORIGINAL PLACE. ADJACENT STRUCTURE SUCH AS BRICK WALL, WOODEN COLUMNS AND ROOF TO BE PROTECTED DURING CONSTRUCTION. SEE DETAILS FOR MORE INFO.
27 (E) STEEL COLUMN TO REMAIN, PROTECT. PAINT PER SCHEDULE
28 (N) STUCCO TO MATCH (E). PTD-01

GENERAL NOTES

1. ALL DIMENSIONS TO BE VERIFIED IN FIELD.
2. SEE SHEET A3.12 FOR TOILET STALLS AND ACCESSORIES INFORMATION.
3. SEE SHEET G0.40 FOR ACCESSORY SCHEDULE AND MOUNTING DIAGRAMS.
4. SEE SHEETS G0.40 AND G0.41 FOR ACCCESSIBILITY NOTES AND DIAGRAMS.
5. SEE SHEET A7.00 FOR WALL TYPE INFO.
6. S.S.D. FOR ADDITIONAL NEW WALL INFO.
7. ALL NEW CONCRETE SLABS TO BE MEDIUM BROOM FINISH.
8. SEE SHEET A2.13 FOR SLAB , CURB CONTROL PLAN, FLOOR DRAIN AND SLOPE DIRECTION.
9. SEE SHEET A2.13 FOR DEPRESS FLOOR AREAS FOR TILE INSTALLATION.
10. SEE SHEET A8.50 FOR TILE INFORMATION.
11. SEE SHEET A8.50 FOR FINISH LEGEND INFORMATION.
12. ALL TOILET PARTITIONS TO HAVE OVERHEAD BRACING.
13. TOWEL PIN TO BE SURFACE MOUNTED (1) PER SHOWER STALL DOOR.
14. ALL CHANGING STALLS TO RECEIVE (1) SURFACE MOUNTED TOWEL AND (1) SURFACE MOUNTED CLOTHES HOOK PER CHANGING STALL.

BUREAU OF ENGINEERING
OFFICIAL RECORD

THE CITY OF LOS ANGELES OR ITS OFFICERS OR AGENTS SHALL NOT BE RESPONSIBLE FOR THE ACCURACY OR COMPLETENESS OF ELECTRONIC COPIES OF THIS PLAN SHEET.

TTLB TEMPLATE REVISION DATE: 02/2013
SHEET ISSUE DATE: 01/04/18
FILE PATH: BIM 360://Granada Hills Pool Renovation/A_Granada-Hills_2017.rvt

REVISION DATES:
(DESIGN STAGE ONLY)

BUREAU OF ENGINEERING
DEPARTMENT OF PUBLIC WORKS
CITY OF LOS ANGELES

ENGINEERING
CITY OF LOS ANGELES

NO.	REVISION DESCRIPTION	DATE	BY

BUILDING NO. -
INDEX NO. RP-300118

LICENSED ARCHITECT
JOHN P. SPARANO
No. C-26244
EXP. 1-30-21
STATE OF CALIFORNIA

GARY LEE MOORE, PE, ENV SP — CITY ENGINEER — DATE: 03/03/20
ARCHITECTURAL DIVISION
ARCHITECT/ENGINEER: JOHN SPARANO LIC. NO.: C-26244 — 03/03/20
DESIGNED BY: SPARANO + MOONEY ARCHITECTURE — 03/03/20
DRAWN BY: JORGE BELTRAN — 03/03/20
CHECKED BY: LUDWING JUAREZ — 03/03/20
APPROVED BY: — 03/03/20

CITY OF LOS ANGELES
VERTICAL CONTROL:
HORIZONTAL CONTROL:

SHEET TITLE: INTERIOR ELEVATIONS

PROJECT: GRANADA HILLS POOL AND BATHHOUSE REPLACEMENT PROJECT
ADDRESS: 16730 CHATSWORTH STREET GRANADA HILLS, CA 91344

BID SET
PROJECT ISSUE DATE: 06/22/21

WORK ORDER NO. #E170517
PLAN FILE NO. #308
DRAWING NO. A4.53
SHEET OF SHEETS

PLOTTED:8/18/2020 1:22:06 PM

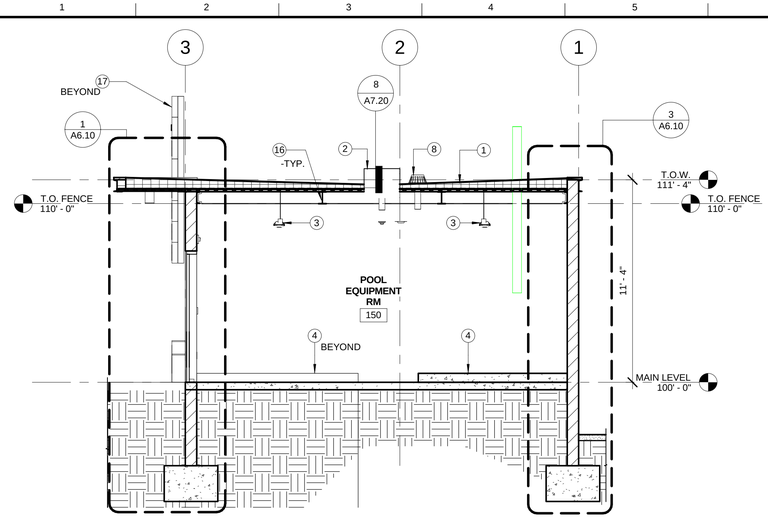

3 POOL EQUIP TRANSVERSE SECTION
1/4" = 1'-0"

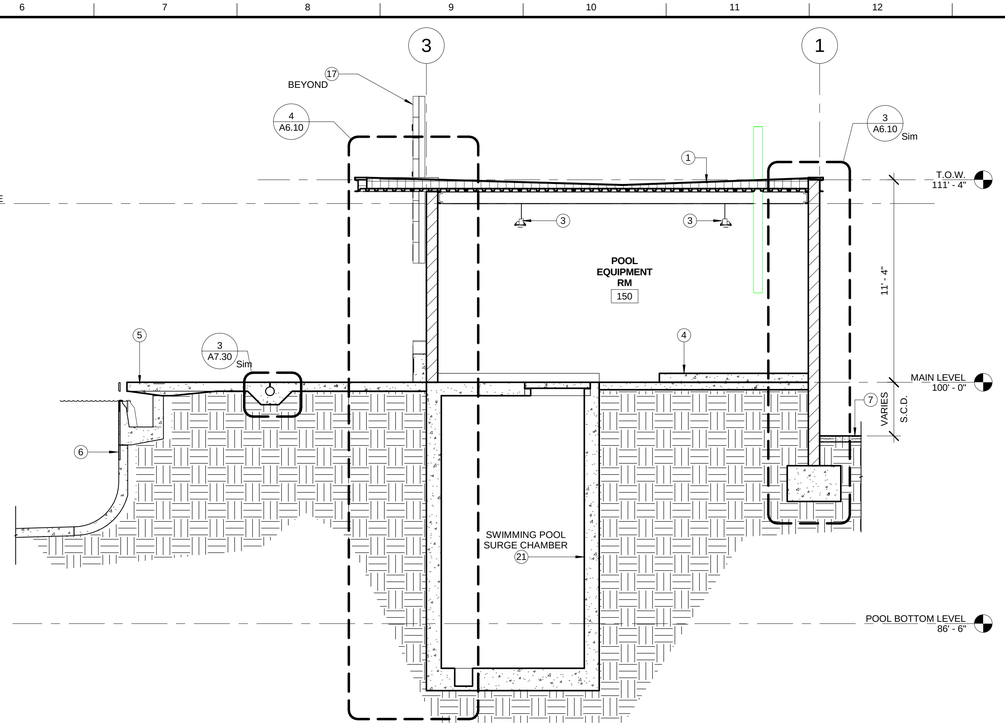

1 POOL EQUIP TRANSVERSE SECTION B
1/4" = 1'-0"

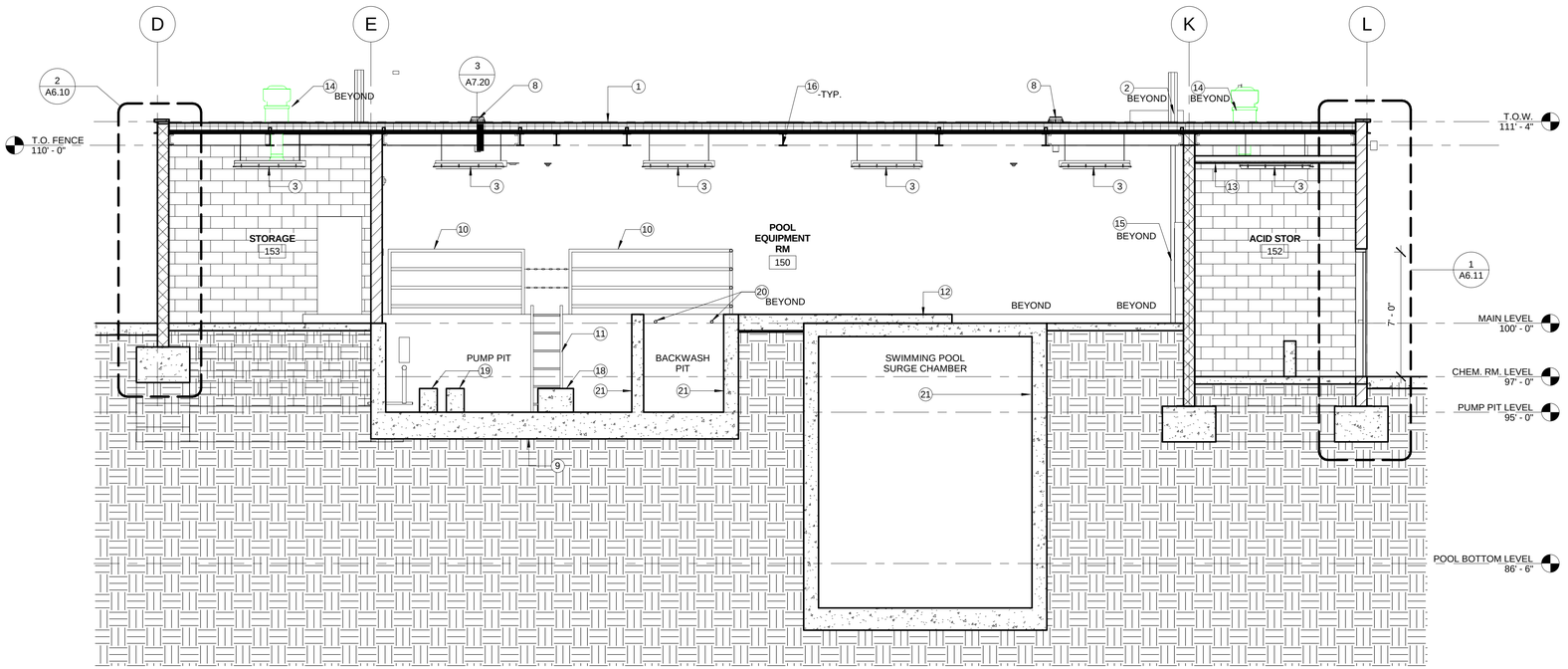

2 POOL EQUIP LONG SECTION
1/4" = 1'-0"

GENERAL NOTES

1. ALL DIMENSIONS TO BE VERIFIED IN FIELD.
2. FOR FURTHER ACCESSORIES INFORMATION SEE ACCESSORY KEYNOTES ON INTERIOR ELEVATIONS

KEYNOTE LEGEND

1 (N) SINGLE-PLY ROOFING MEMBRANE OVER COVERBOARD & TAPERED RIGID INSULATION.
2 (N) ROOF HATCH.
3 (N) LIGHT FIXTURE. S.E.D.
4 (N) 6" CONC. EQUIPMENT PAD. S.S.D. AND S.AQ.D. FOR MORE INFO.
5 (N) 6" CONC POOL DECK. FINISH TO BE MEDIUM BROOM FINISH.COBTRACTOR TO PROVIDE MOCK-UPS OF MEDIUM AND HEAVY FINISH.
6 (N) 75' X 120' SHALLOW-DEEP-SHALLOW SWIMMING POOL, S.AQ.D.
7 (N) ASPHALT PAVEMENT, S.C.D.
8 (N) ROOF DRAIN AND OVERFLOW SYSTEM.
9 (N) CONC. BALANCE TANK AND HATCH, FOR DIMENSIONS, REINFORCEMENT & HATCH INFO. SEE SHEET WP-4 AND STRUCT. DWGS.
10 (N) CIRCULATION PUMP PIT GUARDRAIL. S.AQ.D. FOR MORE INFO.
11 (N) PIT ACCESS LADDER. S.AQ.D. FOR MORE INFO.
12 (N) 6" HIGH EQUIPMENT CONCRETE SLAB. S.AQ.D. & S.S.D. FOR MORE INFO.
13 (N) TYPE "X" GYPSUM BOARD CEILING PER REFLECTED CEILING PLAN.
14 (N) ROOF EXHAUST FAN. S.M.D. FOR MORE INFO.
15 (N) ROOF HATCH PERMANENT FIXED ACCESS LADDER.
16 (N) STRUCTURAL MEMBER. S.S.D. FOR MORE INFO.
17 (N) SCOREBOARD, S.AQ.D & S.E.D. FOR MORE INFO.
18 (N) 36"x24"x16"H CONC. EQUIPMENT PAD. S.S.D. AND S.AQ.D. FOR MORE INFO. VERIFY LOCATION IN FIELD.
19 (N) 22"x12"x16"H CONC. EQUIPMENT PAD. S.S.D. AND S.AQ.D. FOR MORE INFO. VERIFY LOCATION IN FIELD.
20 PROVIDE 2" DIA. PVC DRAINAGE SLEEVE TO BACKWASH PIT.
21 WALLS & FLOORING TO RECEIVE WATERPROOFING SYSTEM PER SWIMMING POOL PAINTING SPEC. SECTION 13 11 55

BUREAU OF ENGINEERING
OFFICIAL RECORD

THE CITY OF LOS ANGELES OR IT'S OFFICERS OR AGENTS SHALL NOT BE RESPONSIBLE FOR THE ACCURACY OR COMPLETENESS OF ELECTRONIC COPIES OF THIS PLAN SHEET.

FILE PATH: BIM 360://Granada Hills Pool Renovation/A_Granada-Hills_2017.rvt
TTLB TEMPLATE REVISION DATE: 02/2013
SHEET ISSUE DATE: 01/04/18

REVISION DATES (DESIGN STAGE ONLY)

BUREAU OF ENGINEERING
ENGINEERING
CITY OF LOS ANGELES

NO.	REVISION DESCRIPTION	DATE	BY

BUILDING NO. -
INDEX NO. RP-300118

ENGINEER'S SEAL
ENGINEER ARCHITECT
GARY L. P. SPARANO
No. C-26244
EXP. 1-30-21
STATE OF CALIFORNIA

DEPARTMENT OF PUBLIC WORKS
BUREAU OF ENGINEERING
CITY OF LOS ANGELES

GARY LEE MOORE, PE, ENV SP
CITY ENGINEER

	DATE:
ARCHITECTURAL DIVISION	03/03/20
ARCHITECT/ENGINEER: JOHN SPARANO LIC. NO.: C-26244	03/03/20
DESIGNED BY: SPARANO + MOONEY ARCHITECTURE	03/03/20
DRAWN BY: JORGE BELTRAN	03/03/20
CHECKED BY: LUDWING JUAREZ	03/03/20
APPROVED BY:	

BID SET
PROJECT ISSUE DATE: 06/22/21

VERTICAL CONTROL:
HORIZONTAL CONTROL:

SHEET TITLE: BUILDING SECTIONS

PROJECT: GRANADA HILLS POOL AND BATHHOUSE REPLACEMENT PROJECT
ADDRESS: 16730 CHATSWORTH STREET GRANADA HILLS, CA 91344

WORK ORDER NO. #E170517
PLAN FILE NO. #308
DRAWING NO. A5.10
SHEET 0 OF SHEETS

PLOTTED:7/29/2021 4:33:38 PM

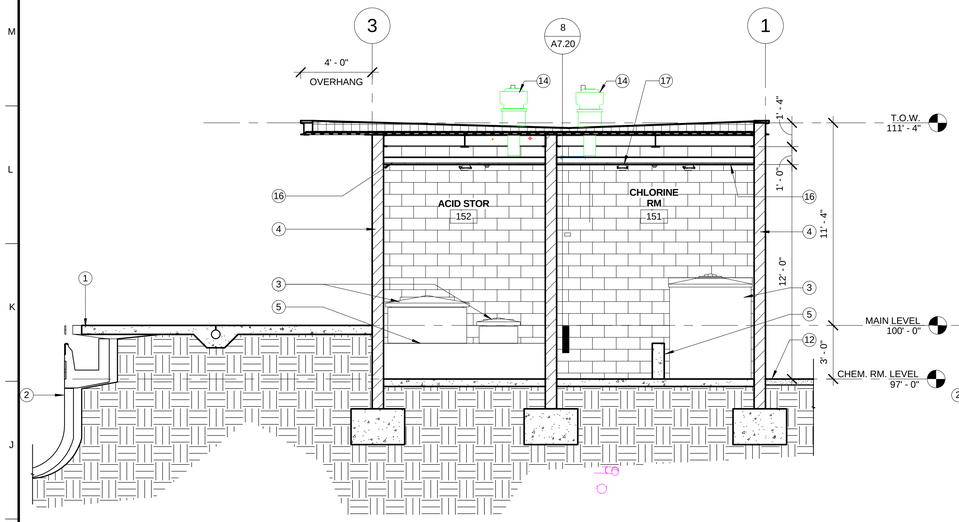

3 POOL EQUIP - CHEMICAL ROOMS SECTION
1/4" = 1'-0"

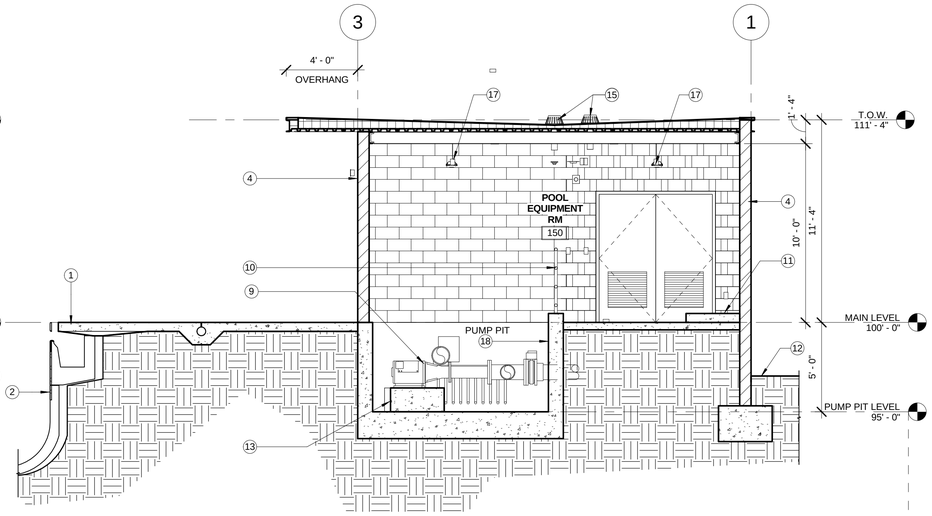

1 POOL EQUIP - PUMP PIT SECTION
1/4" = 1'-0"

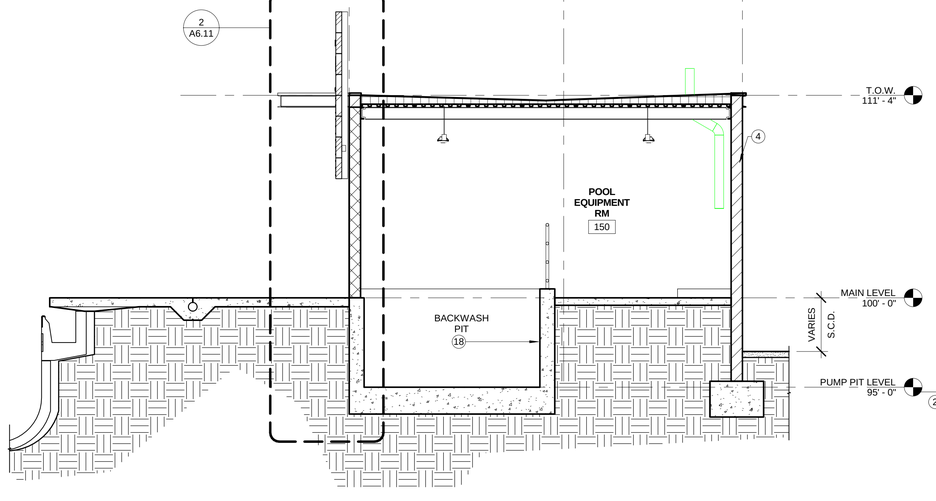

4 POOL EQUIP - BACKWASH PIT SECTION
1/4" = 1'-0"

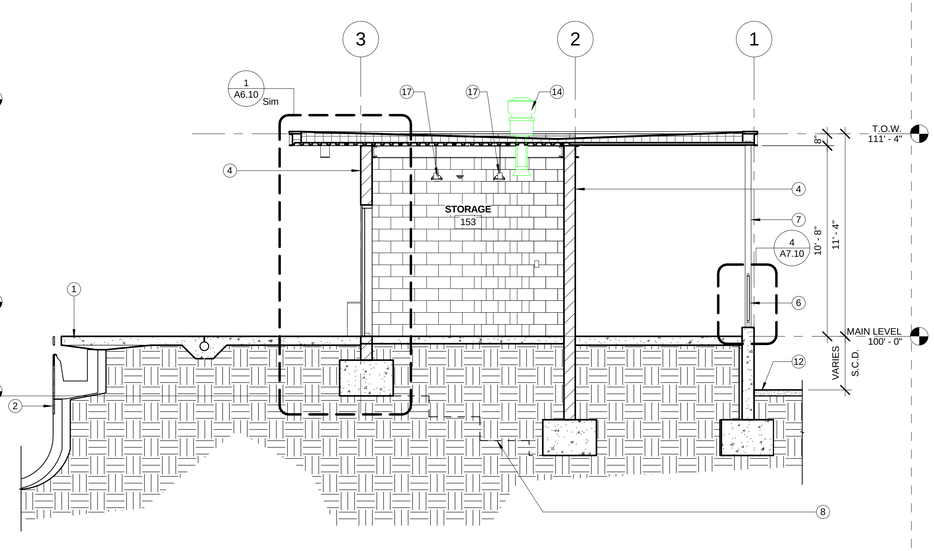

POOL EQUIP - STORAGE ROOM SECTION
2 1/4" = 1'-0"

GENERAL NOTES

1. ALL DIMENSIONS TO BE VERIFIED IN FIELD.
2. FOR FURTHER ACCESSORIES INFORMATION SEE ACCESSORY KEYNOTES ON INTERIOR ELEVATIONS

KEYNOTE LEGEND

1 (N) 6" CONC POOL DECK. FINISH TO BE MEDIUM BROOM FINISH.COBTRACTOR TO PROVIDE MOCK-UPS OF MEDIUM AND HEAVY FINISH.
2 (N) 75' X 120' SHALLOW-DEEP-SHALLOW SWIMMING POOL, S.AQ.D.
3 (N) CHEMICAL STORAGE TANK, S.AQ.D.
4 (N) CONCRETE MASONRY WALL PER FIN. LEGEND: BL-01, S.S.D., SEALED PER SPEC.
5 (N) 8" THK. CONC. CONTAINMENT WALL W/ EPOXY PAINT SEALER FIN., S.AQ.D.
6 (N) GALV. STL. GUARDRAIL.
7 (N) T.S. STRUCTURAL POST, SHOP-PRIMED AND PTD. PER FIN. SCHED., S.S.D.
8 LINE OF STEPPED FOOTING BEYOND, S.S.D.
9 CIRCULATION PUMP PIT, S.AQ.D.
10 (N) CIRCULATION PUMP PIT GUARDRAIL. S.AQ.D. FOR MORE INFO.
11 (N) 6" HIGH EQUIPMENT CONCRETE SLAB. S.AQ.D. & S.S.D. FOR MORE INFO.
12 (N) ASPHALT PAVEMENT, S.C.D.
13 (N) 12" HIGH EQUIPMENT CONCRETE SLAB. S.AQ.D. & S.S.D.
14 MECH EQUIPMENT, S.M.D.
15 (N) ROOF DRAIN AND OVERFLOW SYSTEM.
16 (N) COMPOUND CEILING TYPE "X" ON METAL STUD. SEE CEILING PLANS FOR MORE INFO.
17 (N) LIGHT FIXTURE. S.E.D.
18 WALLS & FLOORING TO RECEIVE WATERPROOFING SYSTEM PER SWIMMING POOL PAINTING SPEC. SECTION 13 11 55

BUREAU OF ENGINEERING
OFFICIAL RECORD

THE CITY OF LOS ANGELES OR ITS OFFICERS OR AGENTS SHALL NOT BE RESPONSIBLE FOR THE ACCURACY OR COMPLETENESS OF ELECTRONIC COPIES OF THIS PLAN SHEET.

TTLB TEMPLATE REVISION DATE: 02/2013
SHEET ISSUE DATE:12/05/18
FILE PATH: BIM 360://Granada Hills Pool Renovation/A_Granada-Hills_2017.rvt

REVISION DATES: (DESIGN STAGE ONLY)

BUREAU OF ENGINEERING
CITY OF LOS ANGELES

NO.	REVISION DESCRIPTION	DATE	BY

BUILDING NO. -
INDEX NO. RP-300118

LICENSED ARCHITECT
GARY L. P. SPARANO
No. C-26244
EXP. 4-30-21
STATE OF CALIFORNIA

DEPARTMENT OF PUBLIC WORKS
BUREAU OF ENGINEERING
CITY OF LOS ANGELES

GARY LEE MOORE, PE, ENV SP
CITY ENGINEER

	DATE:
ARCHITECTURAL DIVISION	
ARCHITECT/ENGINEER: JOHN SPARANO LIC. NO.: C-26244	03/03/20
DESIGNED BY: SPARANO + MOONEY ARCHITECTURE	03/03/20
DRAWN BY: JORGE BELTRAN	03/03/20
CHECKED BY: LUDWING JUAREZ	03/03/20
APPROVED BY: JOHN SPARANO	03/03/20

VERTICAL CONTROL:
HORIZONTAL CONTROL:

SHEET TITLE: BUILDING SECTIONS

PROJECT: GRANADA HILLS POOL AND BATHHOUSE REPLACEMENT PROJECT

ADDRESS: 16730 CHATSWORTH STREET GRANADA HILLS, CA 91344

BID SET
PROJECT ISSUE DATE: **06/22/21**

WORK ORDER NO. #E170517
PLAN FILE NO. #308
DRAWING NO. **A5.11**
SHEET OF SHEETS

PLOTTED:7/29/2021 4:43:18 PM

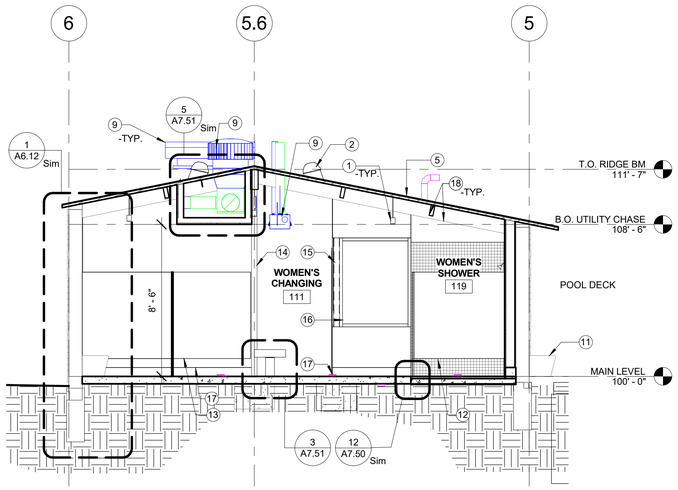

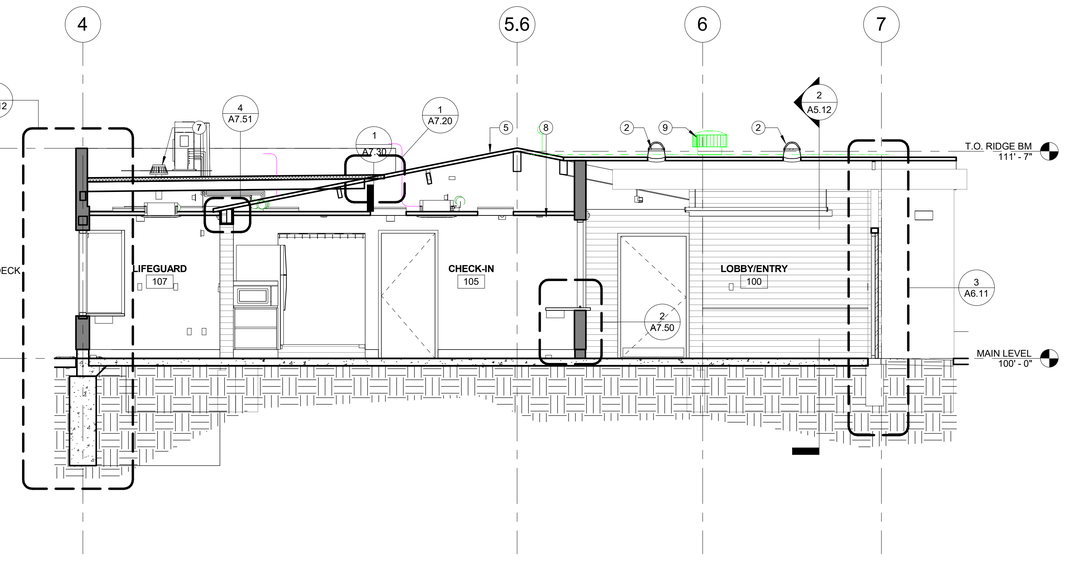

GENERAL NOTES

1. ALL DIMENSIONS TO BE VERIFIED IN FIELD.
2. FOR FURTHER ACCESSORIES INFORMATION SEE ACCESSORY KEYNOTES ON INTERIOR ELEVATIONS

KEYNOTE LEGEND

1 (N) LIGHT FIXTURE. S.E.D.
2 (N) SKYLIGHT, TYP.
3 (N) 34" HIGH S.S. COUNTER TOP, SEE DETAIL 5/A7.50 FOR MORE INFO.
4 (N) 42" HIGH S.S. PUBLIC COUNTER TOP, REF DETAILS.
5 (N) ASPHALT SHINGLE ROOF ON (N) PLYWOOD DECK. REF SPECIFICATIONS FOR ADDITIONAL INFO.
6 (N) GYPSUM BOARD CEILING SYSTEM PER REFLECTED CEILING PLAN.
7 (N) ROOF DRAIN AND OVERFLOW SYSTEM.
8 (N) ACT CEILING SYSTEM PER REFLECTED CEILING PLAN.
9 MECH EQUIPMENT, S.M.D.
10 (N) STEEL SHADE STRUCTURE. PAINT PER SCHEDULE.
11 (E) CONCRETE BENCH TO REMAIN, PROTECT.
12 (N) FLOOR BRACED SOLID PHENOLIC SHOWER PARTITION
13 (N) FLOOR BRACED SOLID PHENOLIC CHANGING STALL PARTITION.
14 (E) STEEL COLUMN TO REMAIN, PROTECT. PAINT PER SCHEDULE
15 (N) TUBE STEEL COLUMN. S.S.D. PAINT PER SCHEDULE.
16 (N) GLAZED ALUM. FRAMED STOREFONT SYSTEM, SEE SHEET A8.12 FOR MORE INFO.
17 (N) CONC. CURB BASE, SEE SLAB CONTROL PLAN SHEET A2.16 FOR MORE INFO.
18 (E) WOOD BEAM TO REMAIN, PROTECT. PAINT PER FINISH SCHEDULE TYP, UNO.
19 (E) BRICK WALL TO REMAIN EXPOSED. CLEAN TO REMOVE EFFLORESCENCE AND SEAL PER SPECIFICATIONS.

4 BATHHOUSE TRANVERSE SECTION D
1/4" = 1'-0"

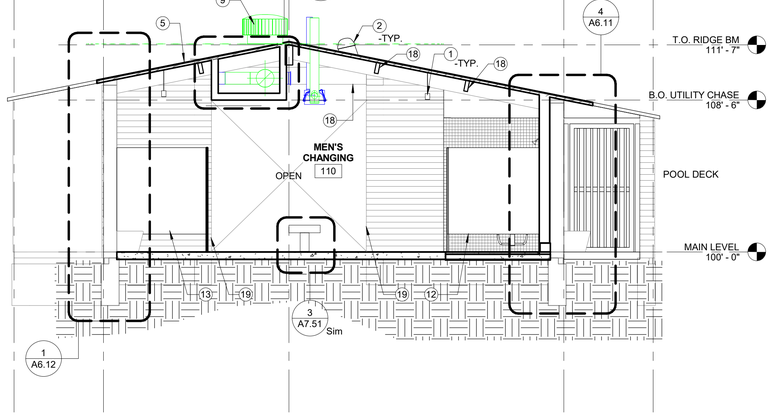

1 BATHHOUSE TRANSVERSE SECTION
1/4" = 1'-0"

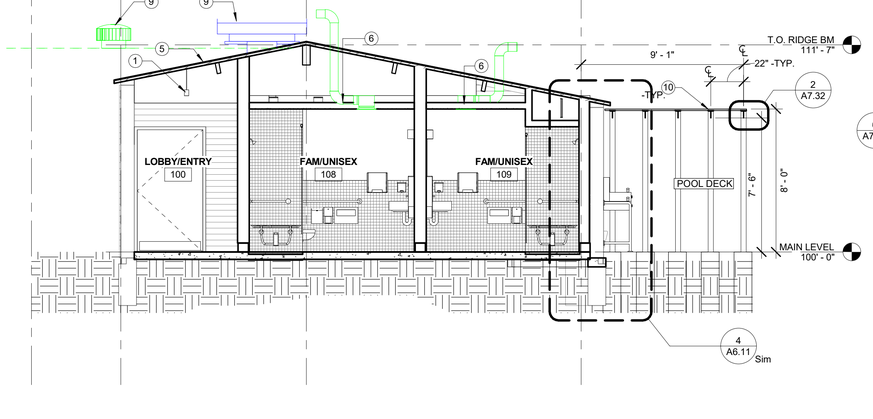

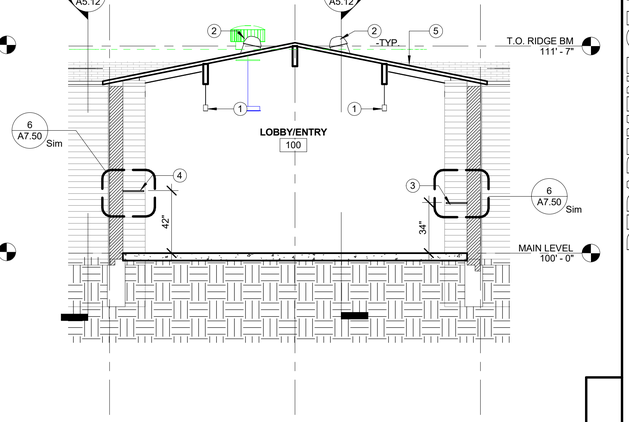

5 BATHHOUSE TRANSVERSE SECTION C
1/4" = 1'-0"

3 BATHHOUSE TRANSVERSE SECTION B
1/4" = 1'-0"

2 BATHHOUSE SECTION LOBBY
1/4" = 1'-0"

BUREAU OF ENGINEERING
OFFICIAL RECORD

THE CITY OF LOS ANGELES OR ITS OFFICERS OR AGENTS SHALL NOT BE RESPONSIBLE FOR THE ACCURACY OR COMPLETENESS OF ELECTRONIC COPIES OF THIS PLAN SHEET.

TTLB TEMPLATE REVISION DATE: 02/2013
SHEET ISSUE DATE: 06/28/18
FILE PATH: BIM 360://Granada Hills Pool Renovation/A_Granada-Hills_2017.rvt

REVISION DATES (DESIGN STAGE ONLY)

BUREAU OF ENGINEERING
CITY OF LOS ANGELES

NO.	REVISION DESCRIPTION	DATE	BY

BUILDING NO. -
INDEX NO. RP-300118

ENGINEER'S SEAL
ERIC P. SPARANO
No. C-26244
REN. 1-30-21
STATE OF CALIFORNIA

DEPARTMENT OF PUBLIC WORKS
BUREAU OF ENGINEERING
CITY OF LOS ANGELES

GARY LEE MOORE, PE, ENV SP
CITY ENGINEER

	DATE:
ARCHITECTURAL DIVISION	
ARCHITECT/ENGINEER: JOHN SPARANO LIC. NO.: C-26244	03/03/20
DESIGNED BY: SPARANO + MOONEY ARCHITECTURE	03/03/20
DRAWN BY: JORGE BELTRAN	03/03/20
CHECKED BY: LUDWING JUAREZ	03/03/20
APPROVED BY: JOHN SPARANO	03/03/20

BID SET
PROJECT ISSUE DATE: 06/22/21

VERTICAL CONTROL:
HORIZONTAL CONTROL:

SHEET TITLE: BUILDING SECTIONS

PROJECT: GRANADA HILLS POOL AND BATHHOUSE REPLACEMENT PROJECT
ADDRESS: 16730 CHATSWORTH STREET GRANADA HILLS, CA 91344

WORK ORDER NO. #E170517
PLAN FILE NO. #308
DRAWING NO. A5.12
SHEET 0 OF SHEETS

PLOTTED:8/18/2020 1:22:24 PM

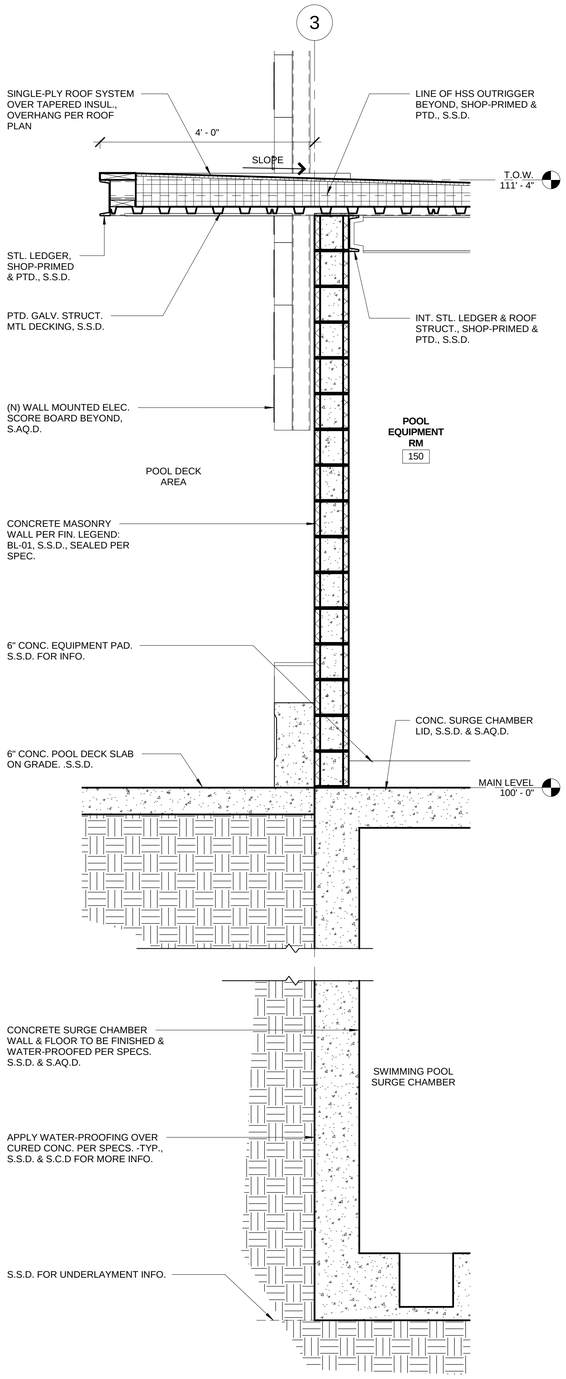

4 POOL EQUIP CONCRETE PIT WALL SECTION
3/4" = 1'-0"

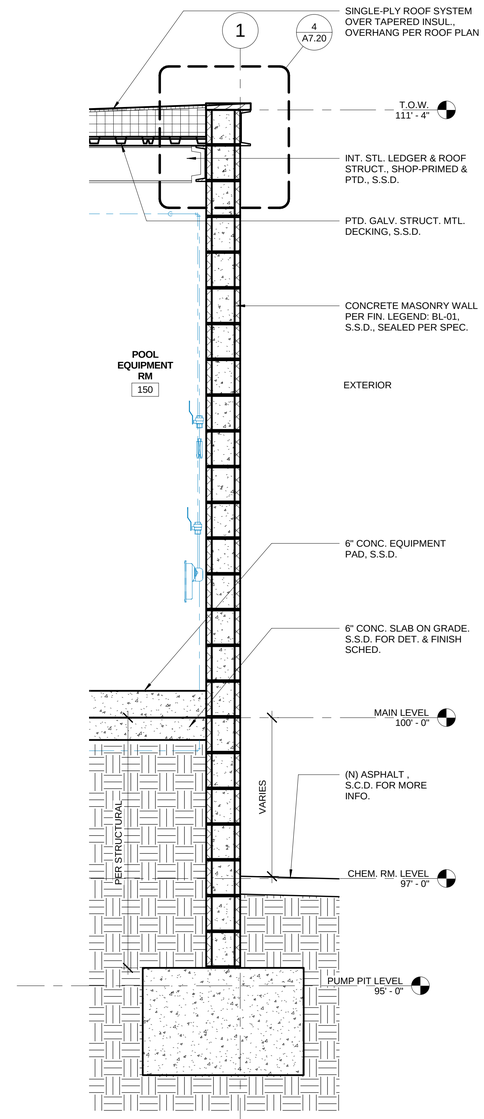

3 POOL EQUIP WALL SECTION-B
3/4" = 1'-0"

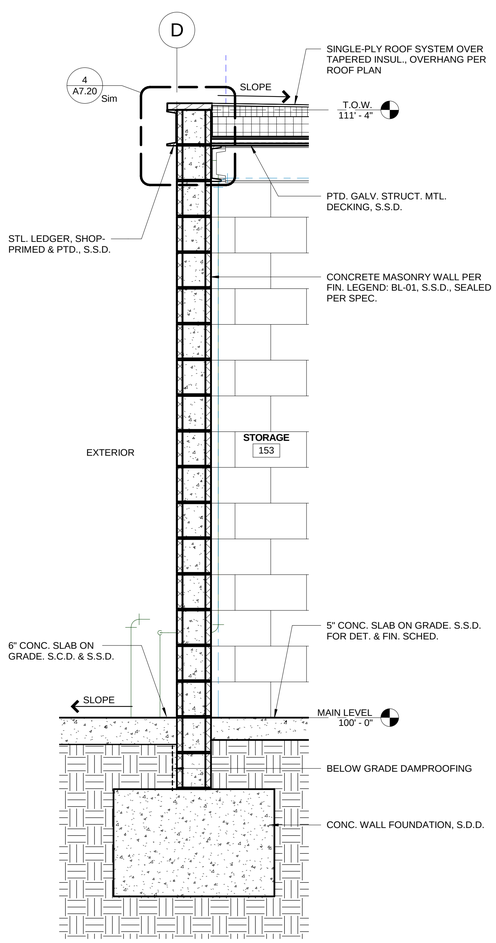

2 POOL EQUIP STORAGE WALL SECTION
3/4" = 1'-0"

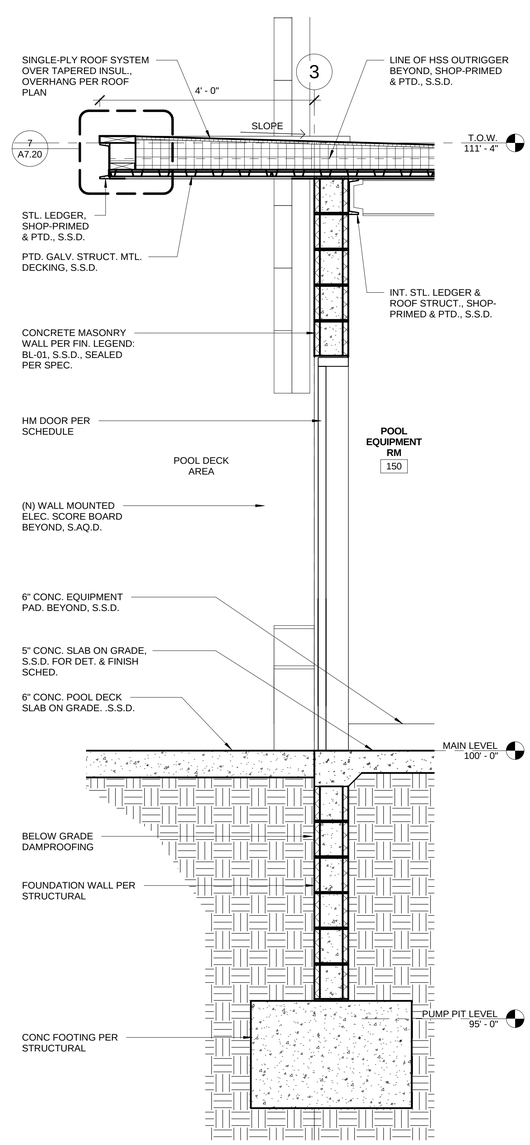

1 POOL EQUIP WALL SECTION-A
3/4" = 1'-0"

THE CITY OF LOS ANGELES OR ITS OFFICERS OR AGENTS SHALL NOT BE RESPONSIBLE FOR THE ACCURACY OR COMPLETENESS OF ELECTRONIC COPIES OF THIS PLAN SHEET.

TTLB TEMPLATE REVISION DATE: 02/2013
SHEET ISSUE DATE: 02/08/18
FILE PATH: BIM 360://Granada Hills Pool Renovation/A_Granada-Hills_2017.rvt

REVISION DATES: (DESIGN STAGE ONLY)

BUREAU OF ENGINEERING
OFFICIAL RECORD

BID SET
PROJECT ISSUE DATE: 06/22/21

CITY OF LOS ANGELES
DEPARTMENT OF PUBLIC WORKS
BUREAU OF ENGINEERING

GARY LEE MOORE, PE, ENV SP
CITY ENGINEER

NO.	REVISION DESCRIPTION	DATE	BY

BUILDING NO. -
INDEX NO. RP-300118

CITY ENGINEER
DATE: 03/03/20 | 03/03/20 | 03/03/20 | 03/03/20 | 03/03/20

ARCHITECT/ENGINEER: JOHN SPARANO LIC. NO.: C-26244
ARCHITECTURAL DIVISION
DESIGNED BY: SPARANO + MOONEY ARCHITECTURE
DRAWN BY: JORGE BELTRAN
CHECKED BY: LUDWING JUAREZ
APPROVED BY: JOHN SPARANO

LICENSED ARCHITECT JOHN P. SPARANO No. C-26244 EXP. 1-30-21 STATE OF CALIFORNIA

VERTICAL CONTROL:
HORIZONTAL CONTROL:

SHEET TITLE: WALL SECTIONS

PROJECT: GRANADA HILLS POOL AND BATHHOUSE REPLACEMENT PROJECT
ADDRESS: 16730 CHATSWORTH STREET GRANADA HILLS, CA 91344

WORK ORDER NO. #E170517
PLAN FILE NO. #308
DRAWING NO. A6.10
SHEET OF SHEETS

PLOTTED:7/29/2021 4:36:58 PM

THE CITY OF LOS ANGELES OR ITS OFFICERS OR AGENTS SHALL NOT BE RESPONSIBLE FOR THE ACCURACY OR COMPLETENESS OF ELECTRONIC COPIES OF THIS PLAN SHEET.

TTLB TEMPLATE REVISION DATE: 02/2013
SHEET ISSUE DATE: 06/29/18
FILE PATH: BIM 360://Granada Hills Pool Renovation/A_Granada-Hills_2017.rvt

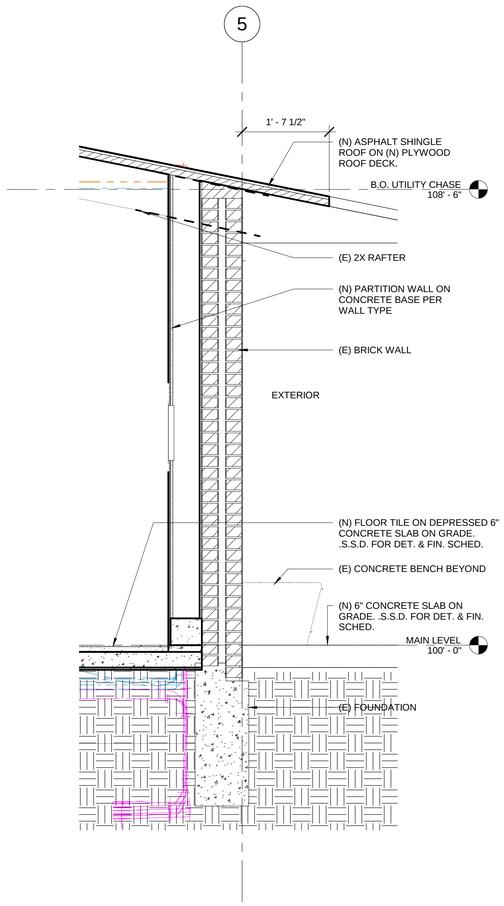

4 MEN'S SHOWER WALL SECTION
3/4" = 1'-0"

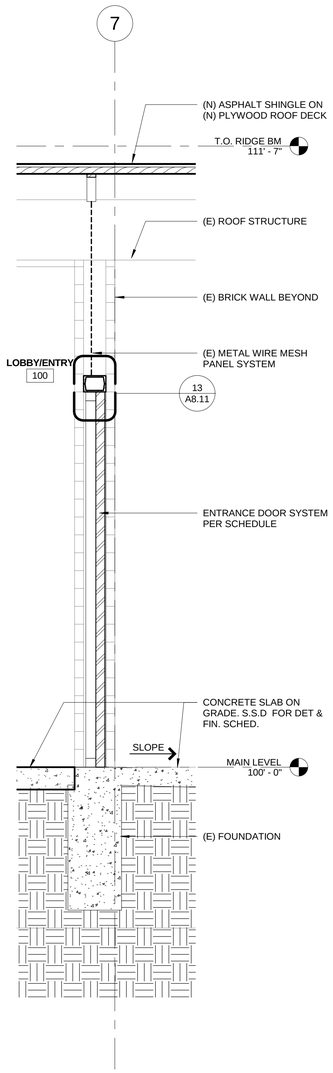

3 LOBBY-ENTRY WALL SECTION
3/4" = 1'-0"

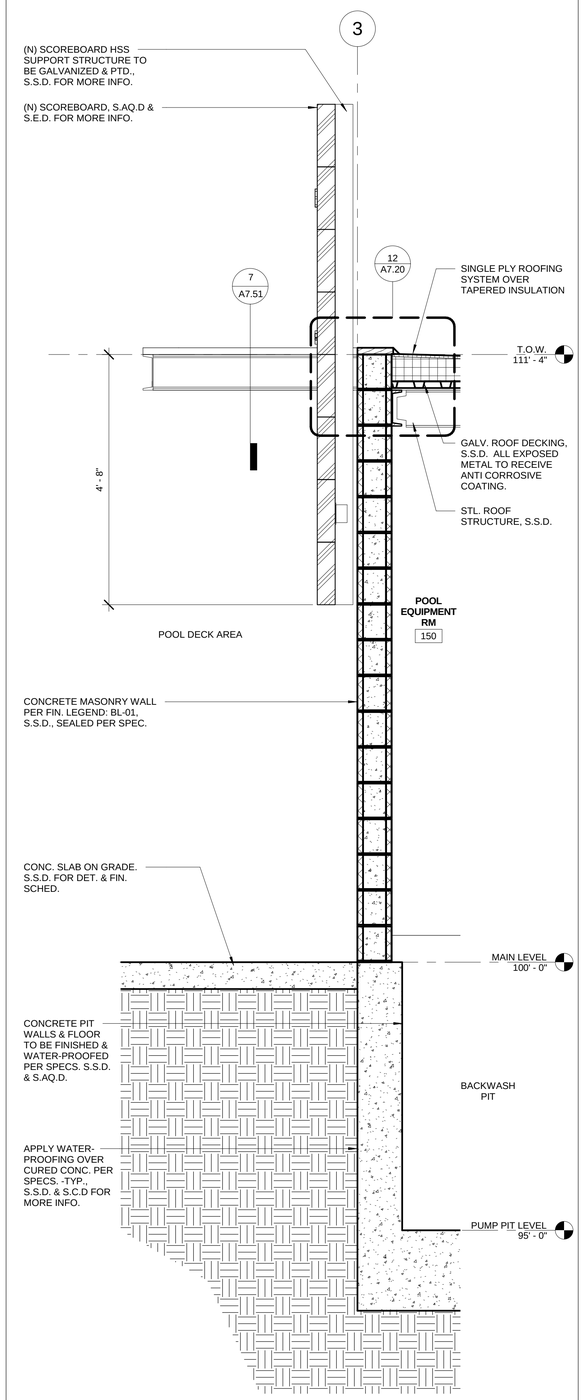

2 POOL EQUIP - PUMP PIT SECTION1 - Callout 1
3/4" = 1'-0"

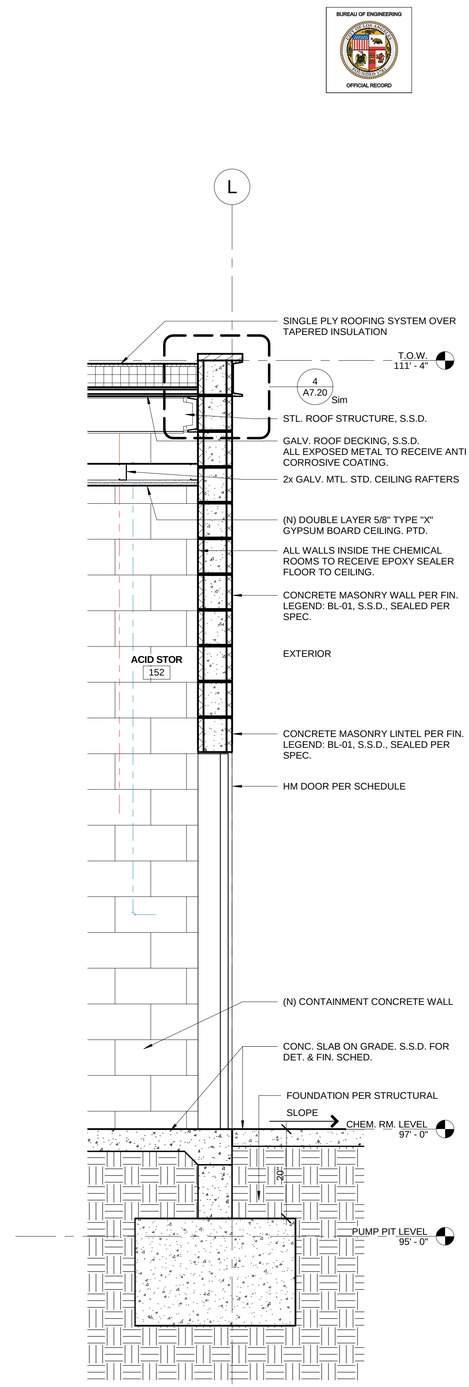

1 ACID STORAGE WALL SECTION
3/4" = 1'-0"

OFFICIAL RECORD

BUREAU OF ENGINEERING
CITY OF LOS ANGELES
DEPARTMENT OF PUBLIC WORKS
GARY LEE MOORE, PE, ENV SP
CITY ENGINEER

NO.	REVISION DESCRIPTION	DATE	BY

BUILDING NO. -
INDEX NO. RP-300118

LICENSED ARCHITECT — JOHN P. SPARANO — No. C-26244 — EXP. 4-30-21 — STATE OF CALIFORNIA

		DATE:
CITY ENGINEER		
ARCHITECTURAL DIVISION		03/03/20
ARCHITECT/ENGINEER: JOHN SPARANO	LIC. NO.: C-26244	03/03/20
DESIGNED BY: SPARANO + MOONEY ARCHITECTURE		03/03/20
DRAWN BY: JORGE BELTRAN		03/03/20
CHECKED BY: LUDWING JUAREZ		03/03/20
APPROVED BY: JOHN SPARANO		03/03/20

VERTICAL CONTROL:
HORIZONTAL CONTROL:

SHEET TITLE: WALL SECTIONS

PROJECT: GRANADA HILLS POOL AND BATHHOUSE REPLACEMENT PROJECT
ADDRESS: 16730 CHATSWORTH STREET GRANADA HILLS, CA 91344

BID SET
PROJECT ISSUE DATE: 06/22/21
CITY OF LOS ANGELES

WORK ORDER NO. #E170517
PLAN FILE NO. #308
DRAWING NO. A6.11
SHEET O F SHEETS

PLOTTED:7/29/2021 4:39:46 PM

REVISION DATES (DESIGN STAGE ONLY)

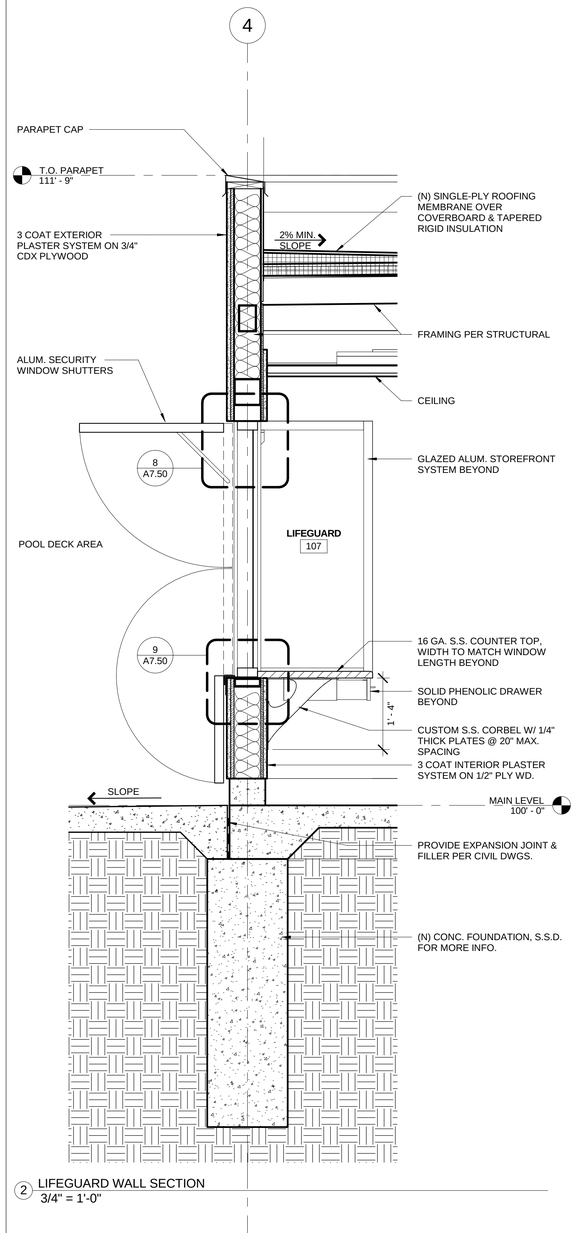

2 LIFEGUARD WALL SECTION
3/4" = 1'-0"

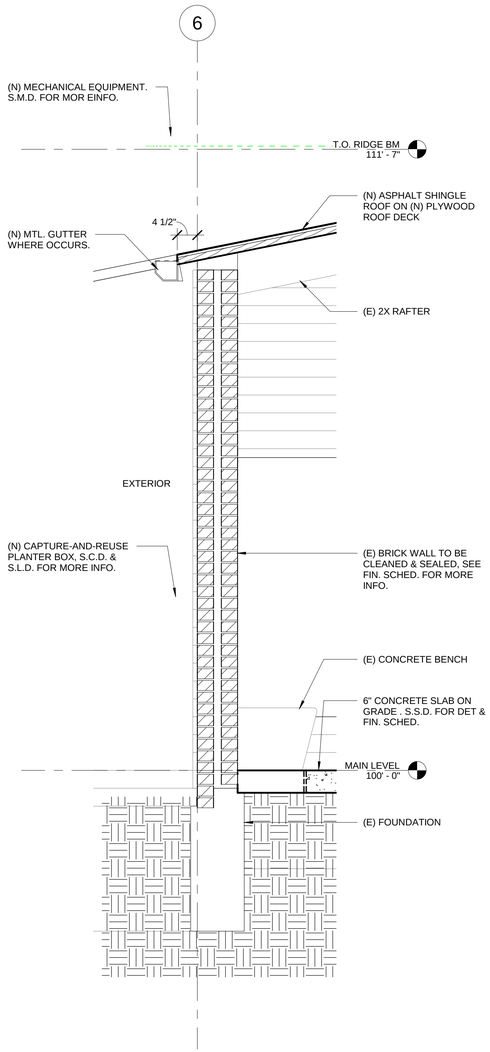

1 MEN'S CHANGING WALL SECTION
3/4" = 1'-0"

BUREAU OF ENGINEERING
OFFICIAL RECORD

THE CITY OF LOS ANGELES OR IT'S OFFICERS OR AGENTS SHALL NOT BE RESPONSIBLE FOR THE ACCURACY OR COMPLETENESS OF ELECTRONIC COPIES OF THIS PLAN SHEET.

REVISION DATES (DESIGN STAGE ONLY)

TTLB TEMPLATE REVISION DATE: 02/2013
SHEET ISSUE DATE: 07/02/18
FILE PATH: BIM 360://Granada Hills Pool Renovation/A_Granada-Hills_2017.rvt

DEPARTMENT OF PUBLIC WORKS
BUREAU OF ENGINEERING

ENGINEERING
CITY OF LOS ANGELES

NO.	REVISION DESCRIPTION	DATE	BY

BUILDING NO. -

INDEX NO. RP-300118

LICENSED ARCHITECT
JOHN P. SPARANO
No. C-26244
EXP. 1-30-21
STATE OF CALIFORNIA

GARY LEE MOORE, PE, ENV SP
CITY ENGINEER

	DATE:
ARCHITECTURAL DIVISION	
ARCHITECT/ENGINEER: JOHN SPARANO LIC. NO.: C-26244	03/03/20
DESIGNED BY: SPARANO + MOONEY ARCHITECTURE	03/03/20
DRAWN BY: JORGE BELTRAN	03/03/20
CHECKED BY: LUDWING JUAREZ	03/03/20
APPROVED BY: JOHN SPARANO	03/03/20

BID SET
PROJECT ISSUE DATE: 06/22/21
CITY OF LOS ANGELES

VERTICAL CONTROL:
HORIZONTAL CONTROL:

SHEET TITLE: WALL SECTIONS

PROJECT: GRANADA HILLS POOL AND BATHHOUSE REPLACEMENT PROJECT

ADDRESS: 16730 CHATSWORTH STREET GRANADA HILLS, CA 91344

WORK ORDER NO. #E170517

PLAN FILE NO. #308

DRAWING NO. A6.12

SHEET O F SHEETS

PLOTTED:7/29/2021 4:35:51 PM

PARTITION TYPE "D"

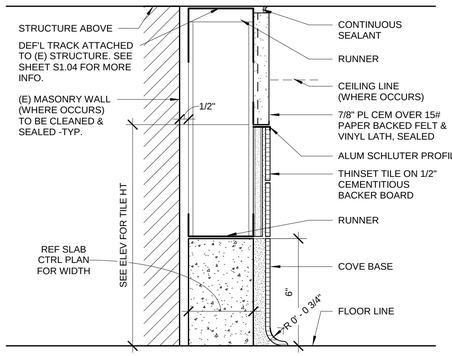

FLOOR PLAN TAG **NO** SOUND ATTENUATION	FLOOR PLAN TAG **WITH SOUND ATTENUATION**	STUD SIZE	PARTITION WIDTH	FIRE RATING	UL LISTING
D2	D2	2 1/2"		NON-RATED	N/A
D3	D3	3 5/8"		NON-RATED	N/A
D6	D6	6"		NON-RATED	N/A

PARTITION TYPE "C"

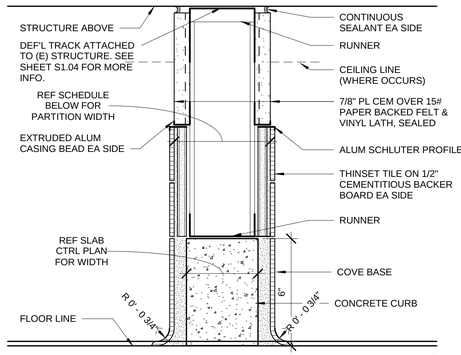

FLOOR PLAN TAG **NO** SOUND ATTENUATION	FLOOR PLAN TAG **WITH SOUND ATTENUATION**	STUD SIZE	PARTITION WIDTH	FIRE RATING	UL LISTING
C2	C2	2 1/2"		NON-RATED	N/A
C3	C3	3 5/8"		NON-RATED	N/A
C6	C6	6"		NON-RATED	N/A

PARTITION TYPE "B"

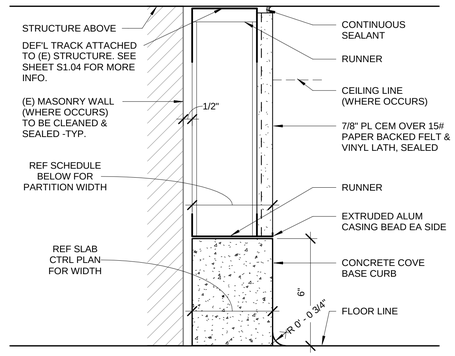

FLOOR PLAN TAG **NO** SOUND ATTENUATION	FLOOR PLAN TAG **WITH SOUND ATTENUATION**	STUD SIZE	PARTITION WIDTH	FIRE RATING	UL LISTING
B2	B2	2 1/2"	3 3/8"	NON-RATED	N/A
B3	B3	3 5/8"	4 1/2"	NON-RATED	N/A
B6	B6	6"	6 7/8"	NON-RATED	N/A

PARTITION TYPE "A"

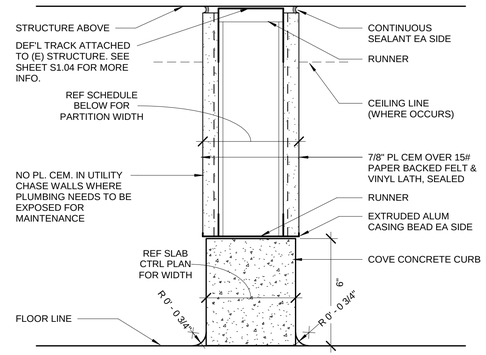

FLOOR PLAN TAG **NO** SOUND ATTENUATION	FLOOR PLAN TAG **WITH SOUND ATTENUATION**	STUD SIZE	PARTITION WIDTH	FIRE RATING	UL LISTING
A2	A2	2 1/2"	4 1/4"	NON-RATED	N/A
A3	A3	3 5/8"	5 3/8"	NON-RATED	N/A
A4	A4	4"	5 3/4"	NON-RATED	N/A
A6	A6	6"	7 3/4"		N/A

PARTITION TYPE "G"

FLOOR PLAN TAG **NO** SOUND ATTENUATION	FLOOR PLAN TAG **WITH SOUND ATTENUATION**	STUD SIZE	PARTITION WIDTH	FIRE RATING	UL LISTING
G2	G2	7/8"	1 3/4"	NON-RATED	N/A

PARTITION TYPE "F"

FLOOR PLAN TAG **NO** SOUND ATTENUATION	FLOOR PLAN TAG **WITH SOUND ATTENUATION**	STUD SIZE	PARTITION WIDTH	FIRE RATING	UL LISTING
F2	F2	2 1/8"	4 1/4"	NON-RATED	N/A

PARTITION TYPE "E"

BUREAU OF ENGINEERING — OFFICIAL RECORD

FLOOR PLAN TAG **NO** SOUND ATTENUATION	FLOOR PLAN TAG **WITH SOUND ATTENUATION**	STUD SIZE	PARTITION WIDTH	FIRE RATING	UL LISTING
E2	E2	7/8"	1 3/4"	NON-RATED	N/A

PARTITION TYPE "K"

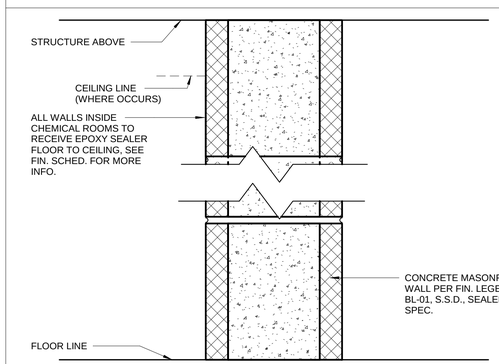

FLOOR PLAN TAG **NO** SOUND ATTENUATION	FLOOR PLAN TAG **WITH SOUND ATTENUATION**	STUD SIZE	PARTITION WIDTH	FIRE RATING	UL LISTING
K2	K2	N/A	7 5/8"	NON-RATED	N/A

PARTITION TYPE "J"

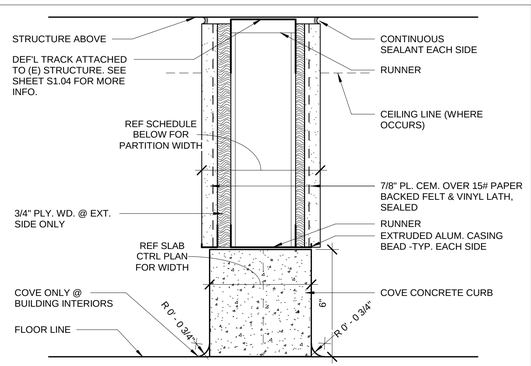

FLOOR PLAN TAG **NO** SOUND ATTENUATION	FLOOR PLAN TAG **WITH SOUND ATTENUATION**	STUD SIZE	PARTITION WIDTH	FIRE RATING	UL LISTING
J2	J2	6"	7 5/8""	NON-RATED	N/A

PARTITION TYPE "H"

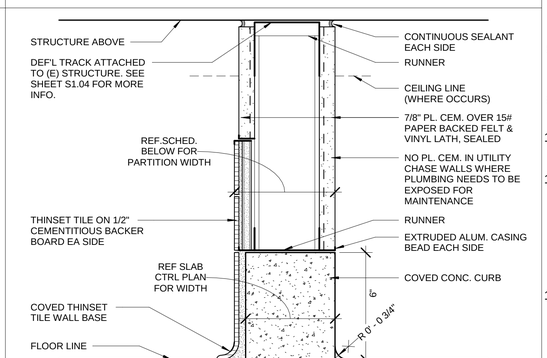

FLOOR PLAN TAG **NO** SOUND ATTENUATION	FLOOR PLAN TAG **WITH SOUND ATTENUATION**	STUD SIZE	PARTITION WIDTH	FIRE RATING	UL LISTING
H2	H2	3 5/8"	5 1/2"	NON-RATED	N/A
H3	H3	6"	7 7/8"	NON-RATED	N/A

PARTITION TYPE GENERAL NOTES

1. PARTITIONS ARE TAGGED ON FLOOR PLANS. REFER TO FLOOR PLANS FOR PARTITION TYPE IDENTIFICATION.
2. PARTITION TYPE TAGS ARE USED TO IDENTIFY CONTIGUOUS PARTITION SEGMENTS. IF A CONTIGUOUS PARTITION SEGMENT IS NOT TAGGED, PARTITION TYPE "A3" SHALL BE ASSUMED.
3. THE PARTITION TAG TYPE INDICATES WHETHER SOUND ATTENUATION IS REQUIRED.

   X# WALL TAG (NO SOUND ATTENUATION)

   X# WALL TAG (**WITH** SOUND ATTENUATION)

4. PARTITION TAGS USE A TWO-PART, ALPHA-NUMERIC DESIGNATION: THE FIRST CHARACTER IS A LETTER INDICATING THE PARTITION TYPE. THE SECOND CHARACTER IS A NUMBER INIDCATING THE WIDTH OF THE STUD OR CMU BLOCK.
5. SEALANT:
   1. USE OF SEALANT FOR FIRE RESISTANCE RATED PARTITIONS SHALL COMPLY WITH REQUIREMENTS OF THE FIRE STOPPING SYSTEM MANUFACTURER AND SHALL BE UL LISTED OR APPROVED IN THE PARTITION UL LISTING.
   2. NON-RATED PARTITIONS SHALL USE ACOUSTICAL SEALANT.
6. INSULATION AS REQUIRED BY UL LISTING OR PARTITION TAG:
   1. USE OF INSULATION FOR FIRE RESISTANCE RATED PARTITIONS SHALL COMPLY WITH THE PARTITION UL LISTING. INSULATION TYPE SHALL BE MINERAL WOOL.
   2. INSULATION TYPE FOR NON-RATED PARTITIONS SHALL BE SOUND ATTENUATION BLANKETS.
   3. PROVIDE FULL THICKNESS INSULATION INSIDE ALL STUD BOX BEAMS AND HEADERS WITHIN PARTITIONS REQUIRING SOUND ATTENUATION.
7. REFER TO METAL STUD MANUFACTURER'S DATA FOR MINIMUM STUD THICKNESS, MAXIMUM SPACING AND ALLOWABLE LIMITING HEIGHTS DEFLECTION CRITERIA FOR GYPSUM BOARD ASSEMBLIES. CONFIRM SEISMIC REQUIREMENTS WITH MANUFACTURER.
8. IF METAL STUD MANUFACTURER DOES NOT PROVIDE LOAD TABLES FOR APPLICATIONS SHOWN IN THESE DOCUMENTS, THE APPLICATION SHALL BE DESIGNED BY DELEGATED ENGINEERS AND SUBMITTED FOR REVIEW.
9. CONSULT WITH OWNER ON REQUIREMENTS FOR LABELING FIRE AND SMOKE RESISTANT RATED PARTITIONS.
10. REFERENCE STRUCTURAL DRAWINGS FOR ADDITIONAL INFORMATION FOR CMU PARTITIONS.
11. GRAPHIC DESIGNATION FOR FIRE RESISTANCE RATED PARTITIONS

    1 HR FIRE BARRIER/SHAFT WALL
    1 HR FIRE BARRIER
    2 HR FIRE BARRIER/SHAFT WALL
    2 HR FIRE BARRIER
    3 HR FIRE BARRIER

12. CEMENT, FIBER-CEMENT OR GLASS MAT GYPSUM BACKERS IN COMPLIANCE WITH ASTM C1178, C1288 OR C1325 SHALL BE USED AS A BASE FOR WALL TILE IN TUB AND SHOWER AREAS AND WALL AND CEILING PANELS IN SHOWER AREAS, WATER-RESISTANCE GYPSUM BACKING BOARD SHALL BE USED AS A BASE FOR TILE IN WATER CLOSET COMPARTMENT WALLS WHEN INSTALLED IN ACCORDANCE WITH GA-216 OR ASTM C840. REGULAR GYPSUM WALLBOARD IS PERMITTED UNDER TILE OR WALL PANELSIN OTHER WALL AND CEILING AREAS WHEN INSTALLED IN ACCORDANCE WITH GA-216 OR ASTM C840. WATER RESISTANCE GYPSUM BOARD SHALL NOT BE USED IN THE FOLLOWING LOCATIONS: SECTION 2506.1:
    A. OVER A VAPOR RETARDER
    B. IN AREAS SUBJECT TO CONTINUOUS HIGH HUMIDITY, SUCH AS SAUNAS, STEAM ROOMS OR GANG SHOWER ROOMS.
    C. ON CEILINGS WHERE FRAME SPACING IS 12" O.C. FOR 1/2" THICK AND MORE THAN 16" O.C. FOR 5/8" THICK.

THE CITY OF LOS ANGELES OR IT'S OFFICERS OR AGENTS SHALL NOT BE RESPONSIBLE FOR THE ACCURACY OR COMPLETENESS OF ELECTRONIC COPIES OF THIS PLAN SHEET.

TTLB TEMPLATE REVISION DATE: 02/2013
SHEET ISSUE DATE: 01/04/18
FILE PATH: BIM 360://Granada Hills Pool Renovation/A_Granada-Hills_2017.rvt

REVISION DATES (DESIGN STAGE ONLY)

ENGINEERING — CITY OF LOS ANGELES

BUREAU OF ENGINEERING

NO.	REVISION DESCRIPTION	DATE	BY

BUILDING NO. -

INDEX NO. RP-300118

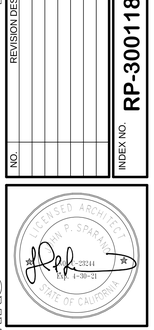

CITY ENGINEER

	DATE:
	03/03/20
	03/03/20
	03/03/20
	03/03/20
	03/03/20

BUREAU OF PUBLIC WORKS — DEPARTMENT OF ENGINEERING

GARY LEE MOORE, PE, ENV SP
CITY ENGINEER

ARCHITECTURAL DIVISION

ARCHITECT/ENGINEER: JOHN SPARANO LIC. NO.: C-26244
DESIGNED BY: SPARANO + MOONEY ARCHITECTURE
DRAWN BY: PHILIP DIMICK
CHECKED BY: LUDWING JUAREZ
APPROVED BY:

CITY OF LOS ANGELES

VERTICAL CONTROL:
HORIZONTAL CONTROL:

SHEET TITLE: WALL TYPES AND DETAILS

PROJECT: GRANADA HILLS POOL AND BATHHOUSE REPLACEMENT PROJECT

ADDRESS: 16730 CHATSWORTH STREET GRANADA HILLS, CA 91344

BID SET
PROJECT ISSUE DATE: **06/22/21**

WORK ORDER NO. #E170517
PLAN FILE NO. #308
DRAWING NO. A7.00
SHEET OF SHEETS

PLOTTED:7/29/2021 4:34:53 PM

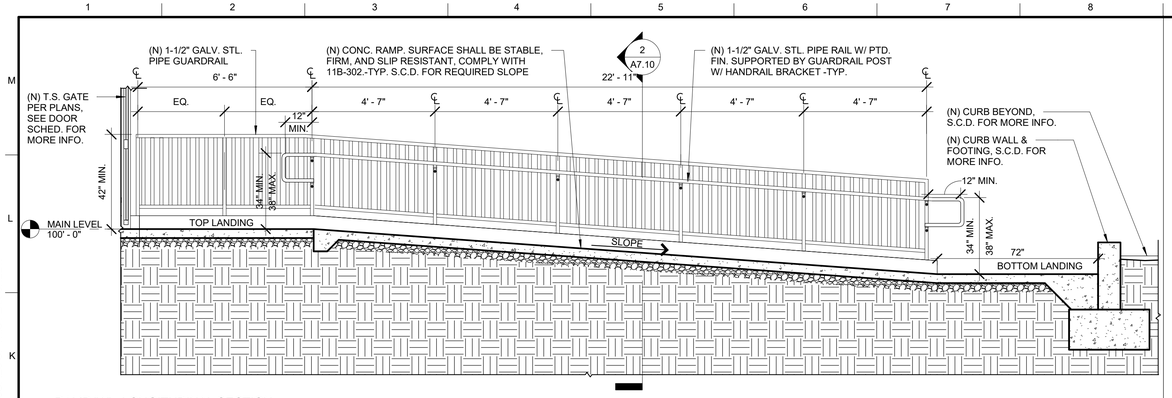

5 RAMP "A" - LONGITUDINAL SECTION
3/8" = 1'-0"

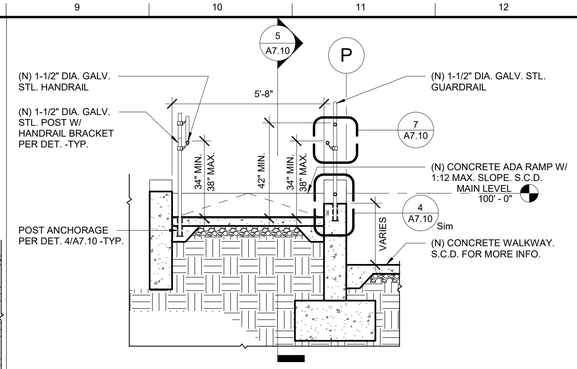

2 ADA RAMP "A"- CROSS SECTION
3/8" = 1'-0"

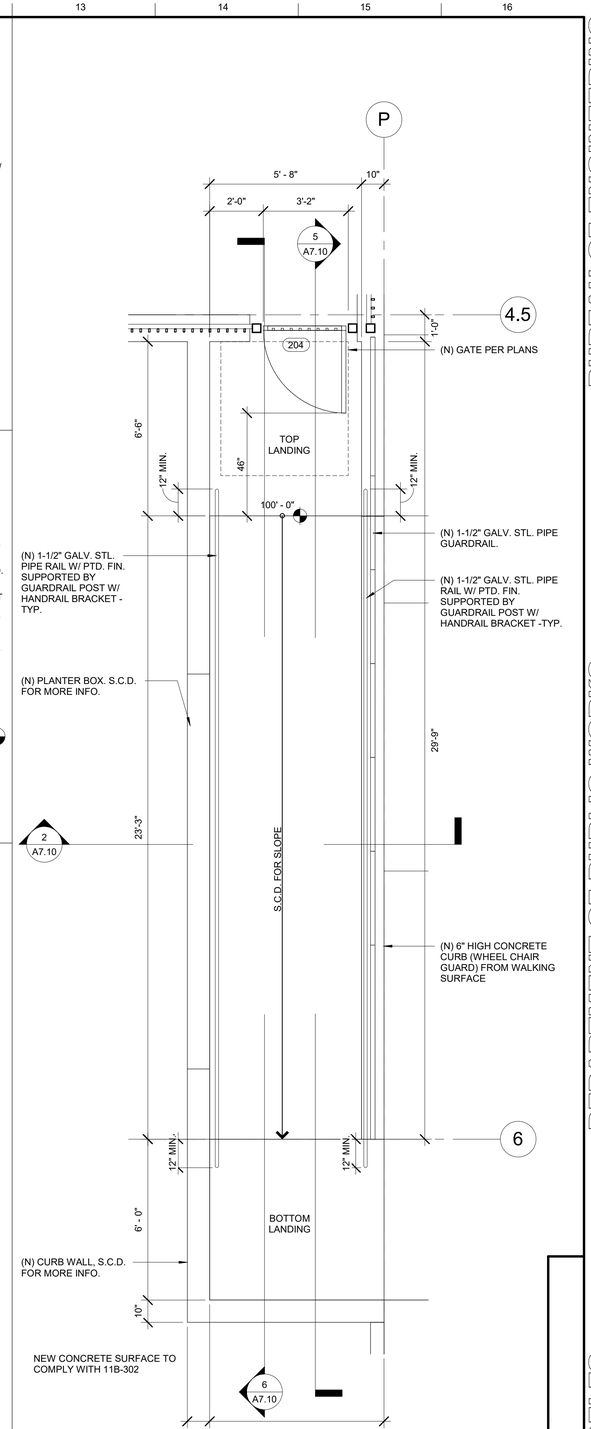

1 ADA RAMP "A"- PLAN
3/8" = 1'-0"

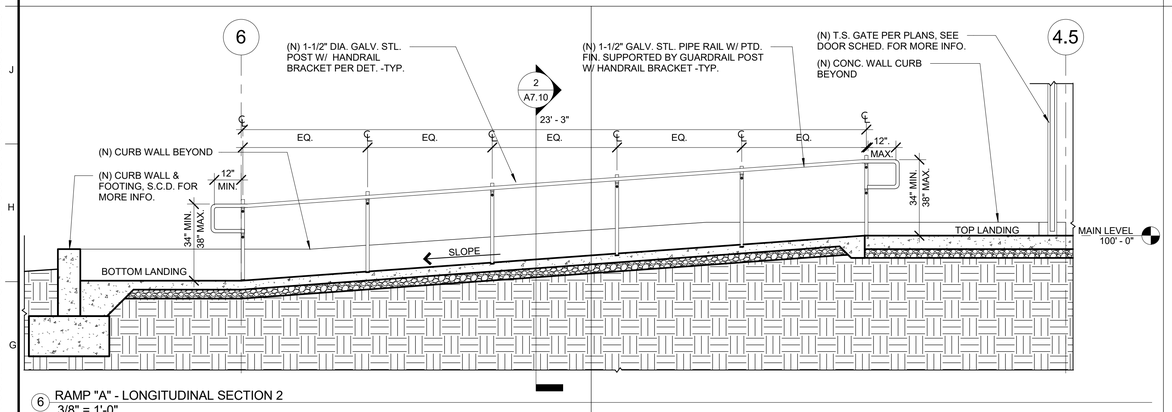

6 RAMP "A" - LONGITUDINAL SECTION 2
3/8" = 1'-0"

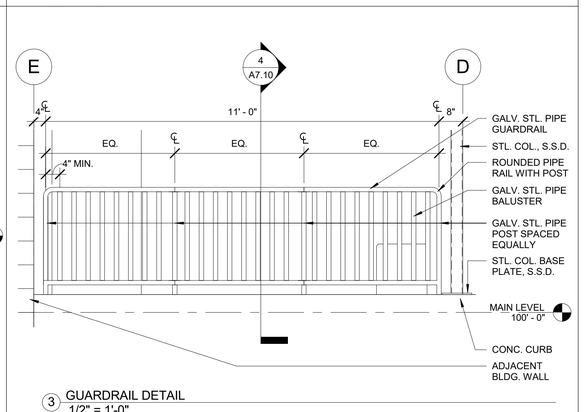

3 GUARDRAIL DETAIL
1/2" = 1'-0"

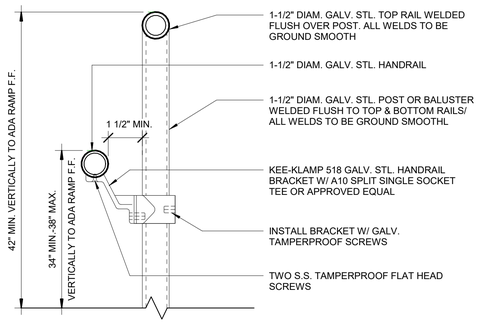

7 HANDRAIL DETAIL
3" = 1'-0"

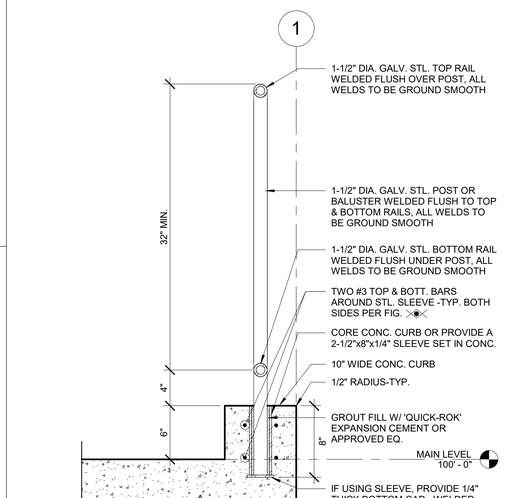

4 GUARDRAIL SECTION DETAIL
1 1/2" = 1'-0"

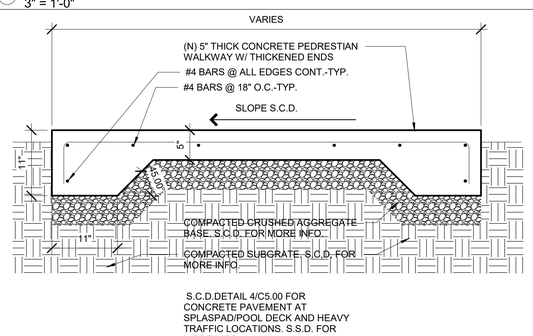

8 PEDESTRIAN WALKWAY
1" = 1'-0"

THE CITY OF LOS ANGELES OR ITS OFFICERS OR AGENTS SHALL NOT BE RESPONSIBLE FOR THE ACCURACY OR COMPLETENESS OF ELECTRONIC COPIES OF THIS PLAN SHEET.

TTLB TEMPLATE REVISION DATE: 02/2013
SHEET ISSUE DATE: 01/04/18
FILE PATH: BIM 360://Granada Hills Pool Renovation/A_Granada-Hills_2017.rvt

REVISION DATES (DESIGN STAGE ONLY)

BUREAU OF ENGINEERING
CITY OF LOS ANGELES

BUILDING NO. -
INDEX NO. RP-300118

NO.	REVISION DESCRIPTION	DATE	BY

LICENSED ARCHITECT
JOHN P. SPARANO
No. C-26244
EXP. 1-30-21
STATE OF CALIFORNIA

DEPARTMENT OF PUBLIC WORKS
BUREAU OF ENGINEERING
CITY OF LOS ANGELES

GARY LEE MOORE, PE, ENV SP — CITY ENGINEER

	DATE:
ARCHITECTURAL DIVISION	
ARCHITECT/ENGINEER: JOHN SPARANO	LIC. NO.: C-26244
DESIGNED BY: SPARANO + MOONEY ARCHITECTURE	03/03/20
DRAWN BY: PHILIP DIMICK	03/03/20
CHECKED BY: LUDWING JUAREZ	03/03/20
APPROVED BY:	03/03/20

VERTICAL CONTROL:
HORIZONTAL CONTROL:

SHEET TITLE: SITE DETAILS

PROJECT: GRANADA HILLS POOL AND BATHHOUSE REPLACEMENT PROJECT
ADDRESS: 16730 CHATSWORTH STREET GRANADA HILLS, CA 91344

BID SET
PROJECT ISSUE DATE: 06/22/21

BUREAU OF ENGINEERING
OFFICIAL RECORD

WORK ORDER NO. #E170517
PLAN FILE NO. #308
DRAWING NO. A7.10
SHEET OF SHEETS

PLOTTED:8/18/2020 1:22:47 PM

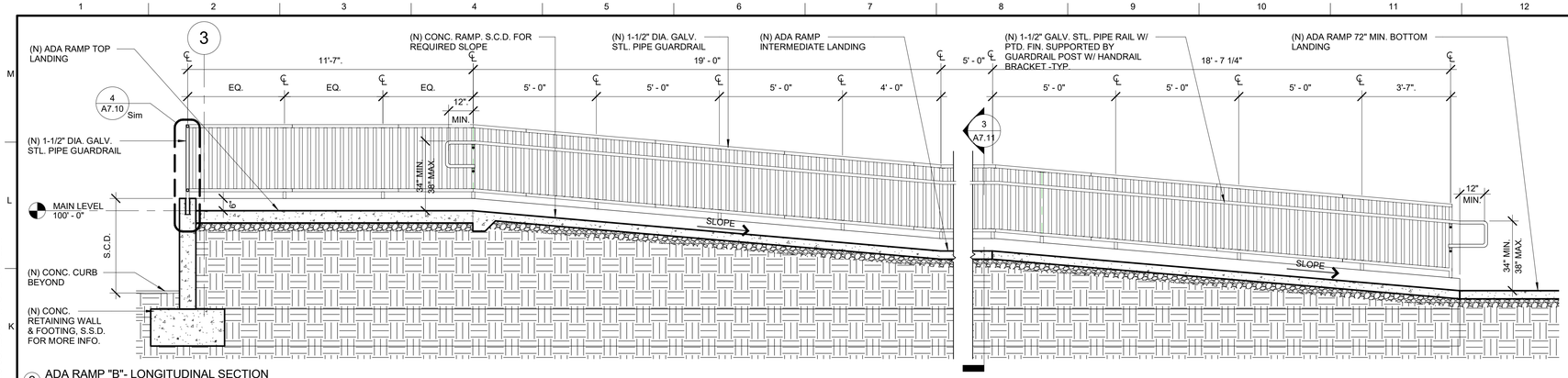

2 ADA RAMP "B"- LONGITUDINAL SECTION
3/8" = 1'-0"

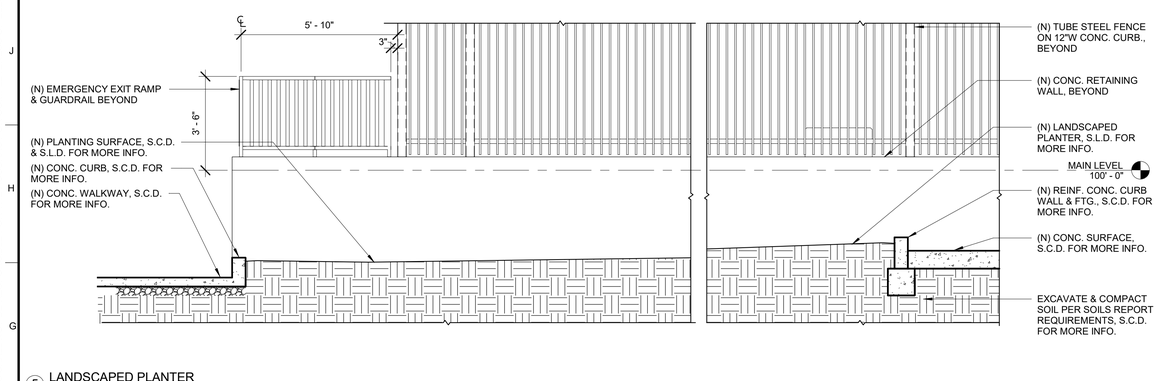

5 LANDSCAPED PLANTER
3/8" = 1'-0"

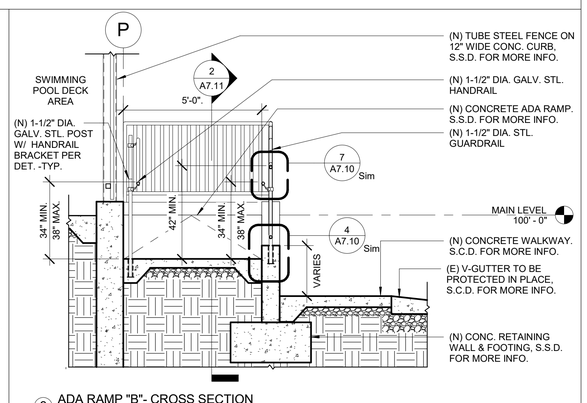

3 ADA RAMP "B"- CROSS SECTION
3/8" = 1'-0"

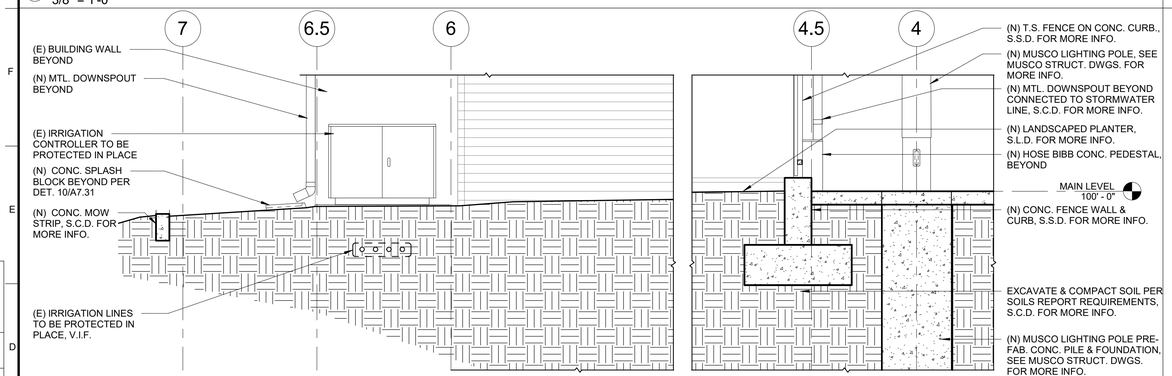

6 WEST PLANTER BOX SECTION
3/8" = 1'-0"

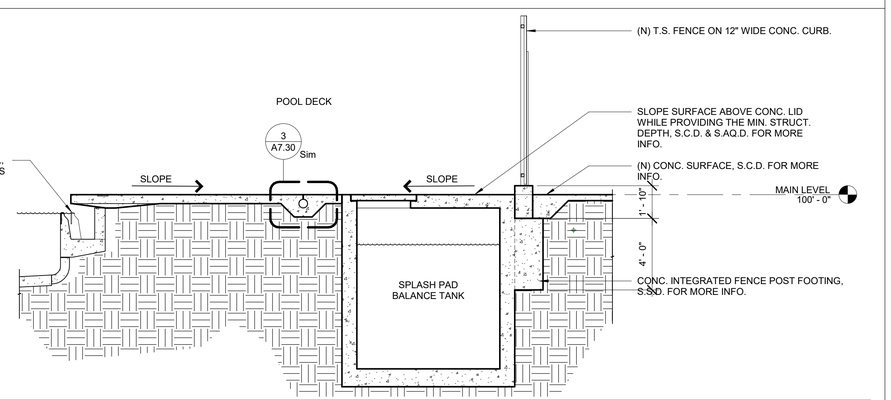

7 BALANCE TANK SECTION
1/4" = 1'-0"

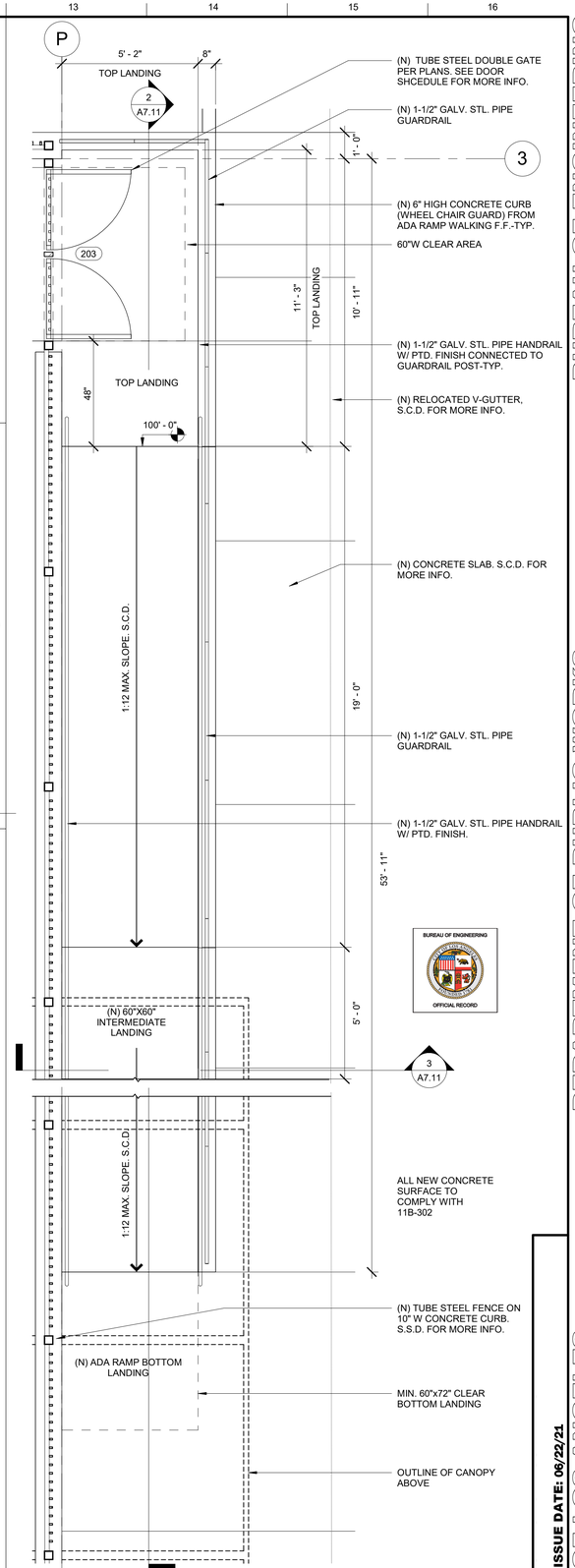

1 ADA RAMP "B"- PLAN
3/8" = 1'-0"

BUREAU OF ENGINEERING
OFFICIAL RECORD

ENGINEERING
CITY OF LOS ANGELES

BUREAU OF ENGINEERING

NO.	REVISION DESCRIPTION	DATE	BY

BUILDING NO. -

INDEX NO. RP-300118

LICENSED ARCHITECT
JOHN P. SPARANO
No. C-26244
EXP. 1-30-21
STATE OF CALIFORNIA

CITY ENGINEER	DATE:
	03/03/20
	03/03/20
	03/03/20
	03/03/20
	03/03/20

DEPARTMENT OF PUBLIC WORKS
CITY OF LOS ANGELES

GARY LEE MOORE, PE, ENV SP
CITY ENGINEER

ARCHITECTURAL DIVISION
ARCHITECT/ENGINEER: JOHN SPARANO LIC. NO.: C-26244
DESIGNED BY: SPARANO + MOONEY ARCHITECTURE
DRAWN BY: JORGE BELTRAN
CHECKED BY: LUDWING JUAREZ
APPROVED BY: JOHN SPARANO

VERTICAL CONTROL:
HORIZONTAL CONTROL:

SHEET TITLE: SITE DETAILS

PROJECT: GRANADA HILLS POOL AND BATHHOUSE REPLACEMENT PROJECT

ADDRESS: 16730 CHATSWORTH STREET GRANADA HILLS, CA 91344

BID SET
PROJECT ISSUE DATE: 06/22/21

WORK ORDER NO. #E170517
PLAN FILE NO. #308
DRAWING NO. A7.11
SHEET 0 OF SHEETS

PLOTTED:8/18/2020 1:22:53 PM

THE CITY OF LOS ANGELES OR IT'S OFFICERS OR AGENTS SHALL NOT BE RESPONSIBLE FOR THE ACCURACY OR COMPLETENESS OF ELECTRONIC COPIES OF THIS PLAN SHEET.

TTLB TEMPLATE REVISION DATE: 02/2013
SHEET ISSUE DATE: 12/15/18
FILE PATH: BIM 360://Granada Hills Pool Renovation/A_Granada-Hills_2017.rvt

REVISION DATES (DESIGN STAGE ONLY)

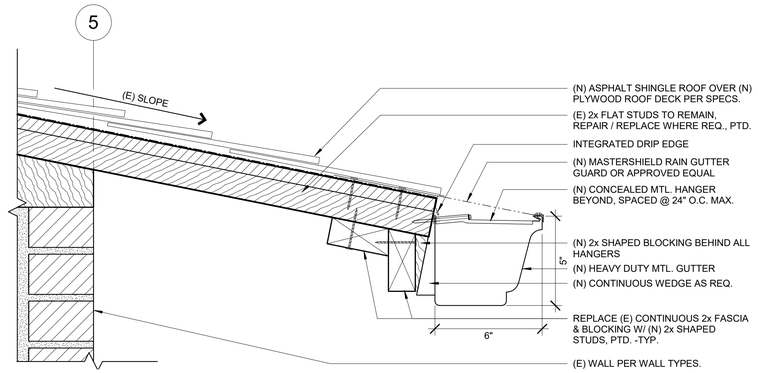

5 RAIN GUTTER DETAIL1
3" = 1'-0"

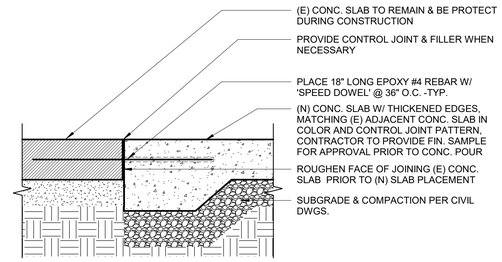

S.S.D. AND S.C.D. FOR MORE INFO.

1 (N) TO (E) CONC. SLAB -TYP. DETAIL
1 1/2" = 1'-0"

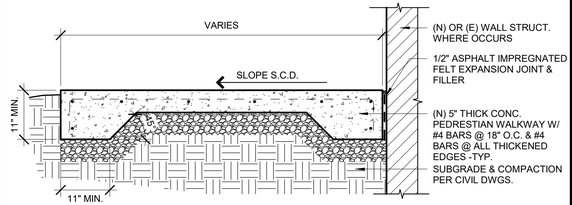

S.C.D. DETAIL 4/C5.00 FOR CONC. PAVEMENT AT SPLASPAD, POOL DECK & HEAVY TRAFFIC LOCATIONS. S.S.D. FOR MORE INFO.

2 CONCRETE WALKWAY DETAIL
3/4" = 1'-0"

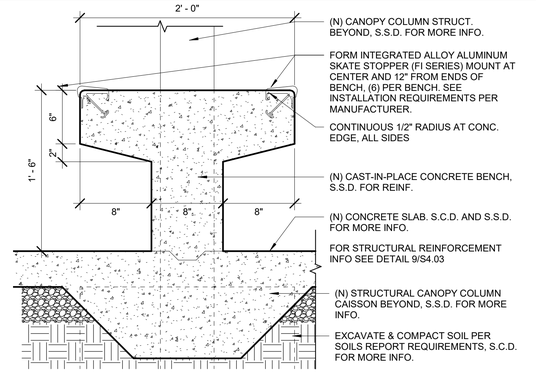

3 (N) CONCRETE BENCH DETAIL
1 1/2" = 1'-0"

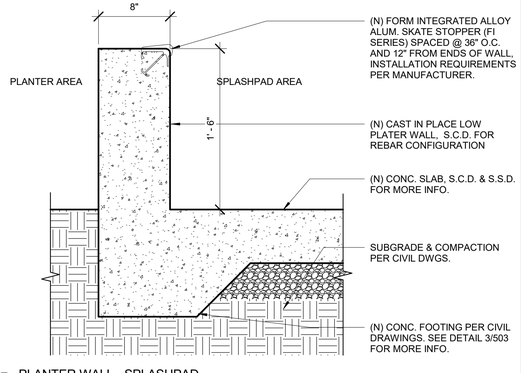

4 PLANTER WALL - SPLASHPAD
1 1/2" = 1'-0"

BUREAU OF ENGINEERING
OFFICIAL RECORD

BUREAU OF ENGINEERING
ENGINEERING
CITY OF LOS ANGELES

NO.	REVISION DESCRIPTION	DATE	BY

BUILDING NO. -
INDEX NO. RP-300118

LICENSED ARCHITECT JOHN P. SPARANO C-26244 DATE 1-30-21 STATE OF CALIFORNIA

DEPARTMENT OF PUBLIC WORKS
CITY OF LOS ANGELES

GARY LEE MOORE, PE, ENV SP
CITY ENGINEER

		DATE:
ARCHITECTURAL DIVISION		
ARCHITECT/ENGINEER:	JOHN SPARANO LIC. NO.: C-26244	03/03/20
DESIGNED BY:	SPARANO + MOONEY ARCHITECTURE	03/03/20
DRAWN BY:	JORGE BELTRAN	03/03/20
CHECKED BY:	LUDWING JUAREZ	03/03/20
APPROVED BY:	JOHN SPARANO	03/03/20

VERTICAL CONTROL:
HORIZONTAL CONTROL:

SHEET TITLE: SITE DETAILS

PROJECT: GRANADA HILLS POOL AND BATHHOUSE REPLACEMENT PROJECT
ADDRESS: 16730 CHATSWORTH STREET GRANADA HILLS, CA 91344

BID SET
PROJECT ISSUE DATE: 06/22/21

WORK ORDER NO. #E170517
PLAN FILE NO.
DRAWING NO. A7.12
SHEET OF SHEETS

PLOTTED:8/18/2020 1:22:58 PM

THE CITY OF LOS ANGELES OR ITS OFFICERS OR AGENTS SHALL NOT BE RESPONSIBLE FOR THE ACCURACY OR COMPLETENESS OF ELECTRONIC COPIES OF THIS PLAN SHEET.

REVISION DATES (DESIGN STAGE ONLY)

TTLB TEMPLATE REVISION DATE: 02/2013
SHEET ISSUE DATE: 06/19/18
FILE PATH: BIM 360://Granada Hills Pool Renovation/A_Granada-Hills_2017.rvt

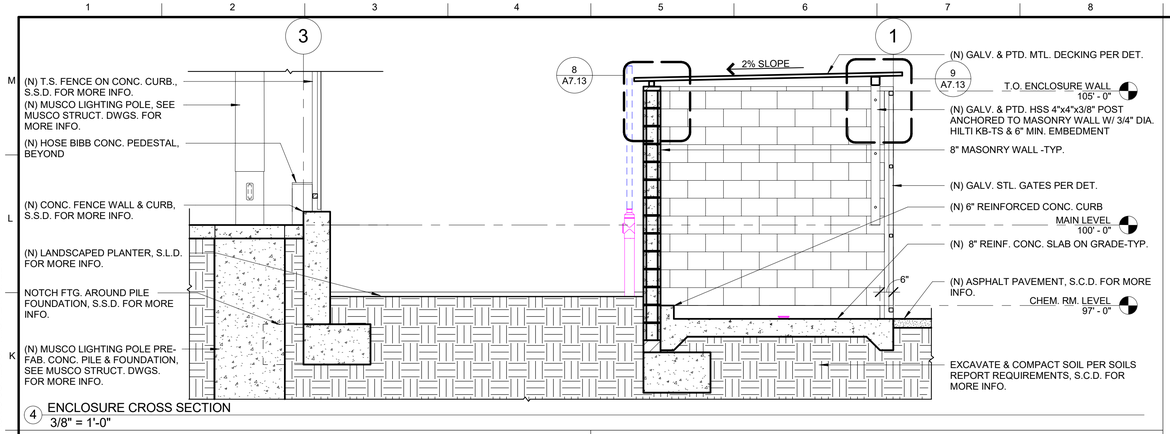

4 ENCLOSURE CROSS SECTION
3/8" = 1'-0"

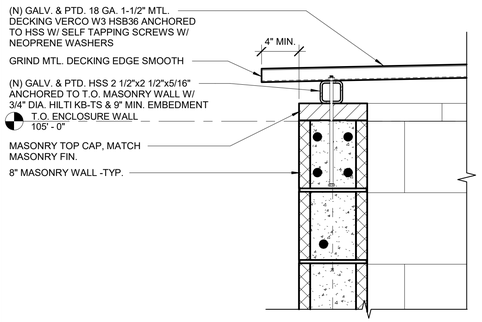

8 ROOF EAVE DETAIL 2
1 1/2" = 1'-0"

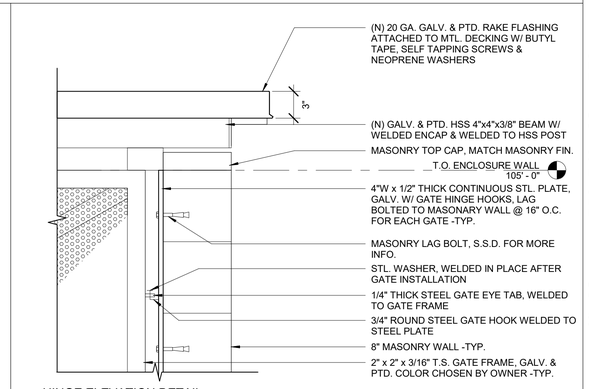

5 HINGE ELEVATION DETAIL
1 1/2" = 1'-0"

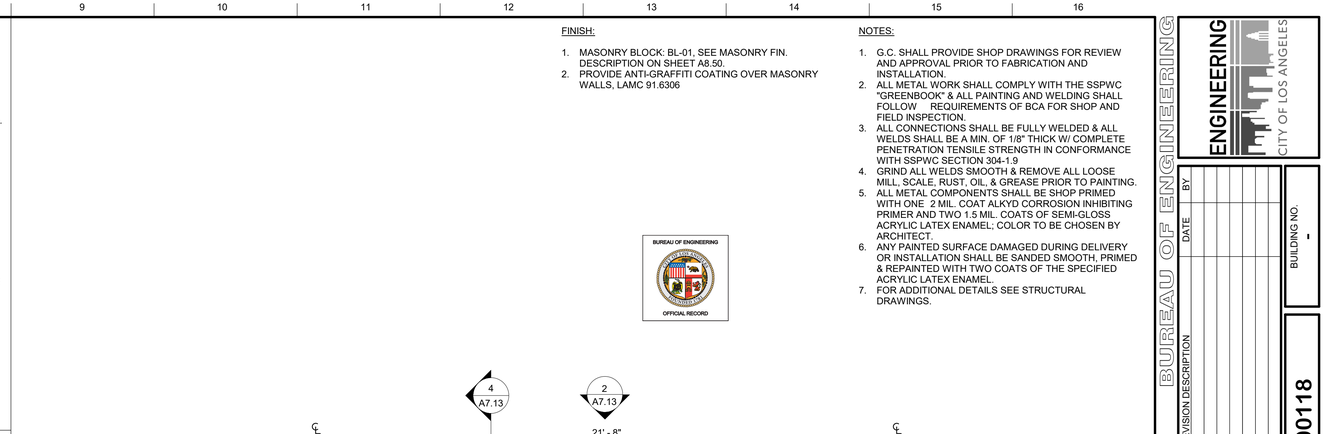

1 ENCLOSURE FLOOR PLAN
3/8" = 1'-0"

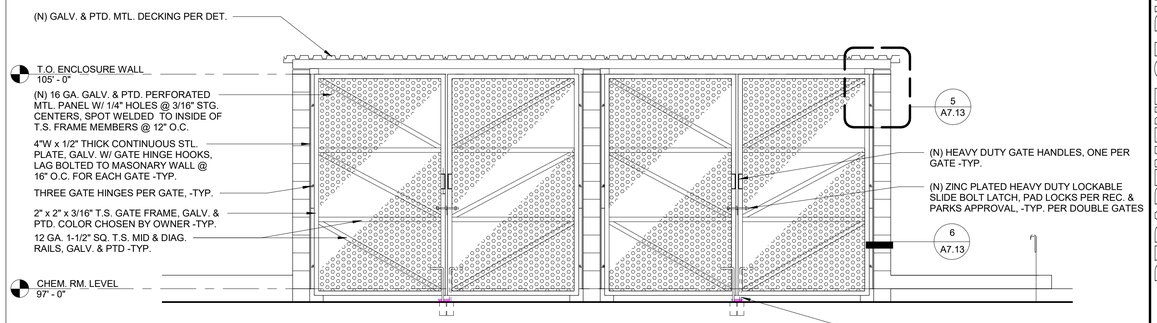

2 ENCLOSURE ELEVATION
3/8" = 1'-0"

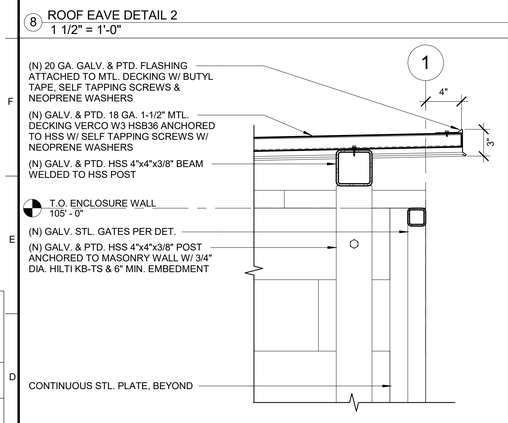

9 ROOF EAVE DETAIL 3
1 1/2" = 1'-0"

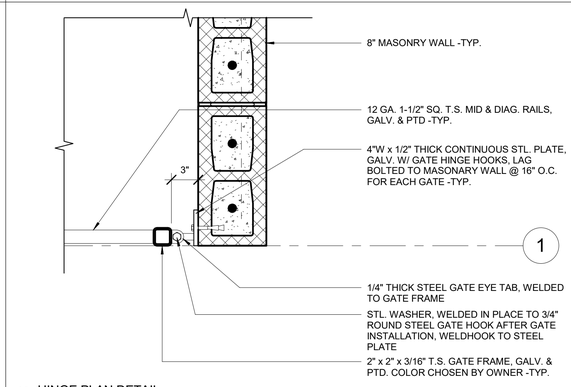

6 HINGE PLAN DETAIL
1 1/2" = 1'-0"

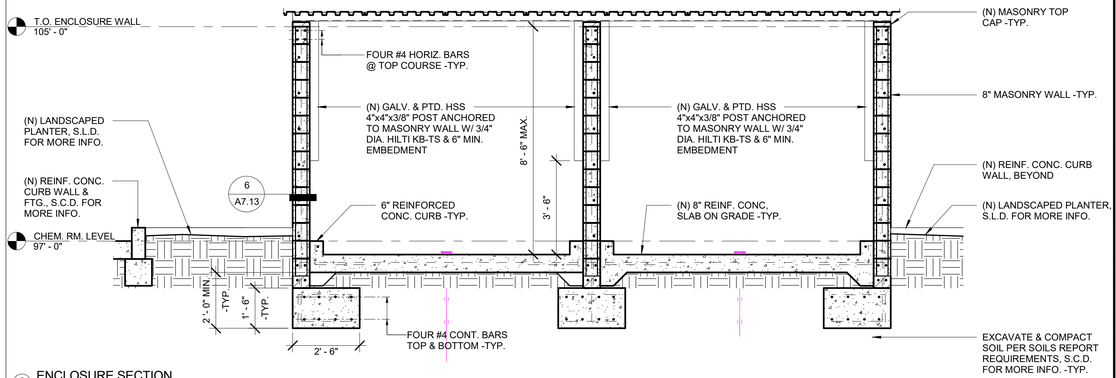

3 ENCLOSURE SECTION
3/8" = 1'-0"

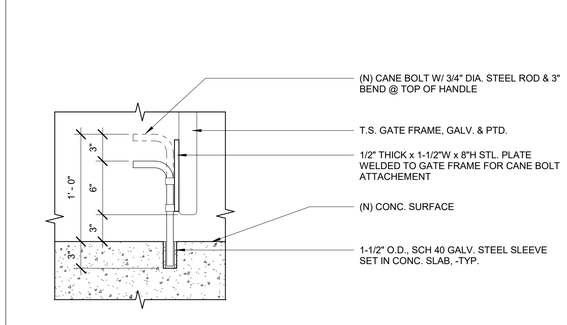

7 CANE BOLT DETAIL
1 1/2" = 1'-0"

THE CITY OF LOS ANGELES OR ITS OFFICERS OR AGENTS SHALL NOT BE RESPONSIBLE FOR THE ACCURACY OR COMPLETENESS OF ELECTRONIC COPIES OF THIS PLAN SHEET.

TTLB TEMPLATE REVISION DATE: 02/2013
SHEET ISSUE DATE: 02/23/20
FILE PATH: BIM 360://Granada Hills Pool Renovation/A_Granada-Hills_2017.rvt

REVISION DATES (DESIGN STAGE ONLY)

DEPARTMENT OF PUBLIC WORKS
BUREAU OF ENGINEERING
CITY OF LOS ANGELES
ENGINEERING
CITY OF LOS ANGELES

NO.	REVISION DESCRIPTION	DATE	BY

BUILDING NO. -
INDEX NO. RP-300118

ENGINEER'S SEAL
JOHN P. SPARANO
No. C-26244
REN. 6-30-21
STATE OF CALIFORNIA

CITY ENGINEER	DATE:
SP	03/03/20
GARY LEE MOORE, PE, ENV SP	03/03/20
ARCHITECT/ENGINEER: JOHN SPARANO LIC. NO.: C-26244	03/03/20
ARCHITECTURAL DIVISION	03/03/20
DESIGNED BY: SPARANO + MOONEY ARCHITECTURE	03/03/20
DRAWN BY: JORGE BELTRAN	
CHECKED BY: LUDWING LUAREZ	
APPROVED BY: JOHN SPARANO	

BID SET
PROJECT ISSUE DATE: 06/22/21

VERTICAL CONTROL:
HORIZONTAL CONTROL:

SHEET TITLE: TRASH AND RECYCLING ENCLOSURE PLANS & DETAILS

PROJECT: GRANADA HILLS POOL AND BATHHOUSE REPLACEMENT PROJECT

ADDRESS: 16730 CHATSWORTH STREET GRANADA HILLS, CA 91344

WORK ORDER NO. #E170517
PLAN FILE NO.
DRAWING NO. A7.13
SHEET 0 OF SHEETS

PLOTTED:8/18/2020 1:23:05 PM

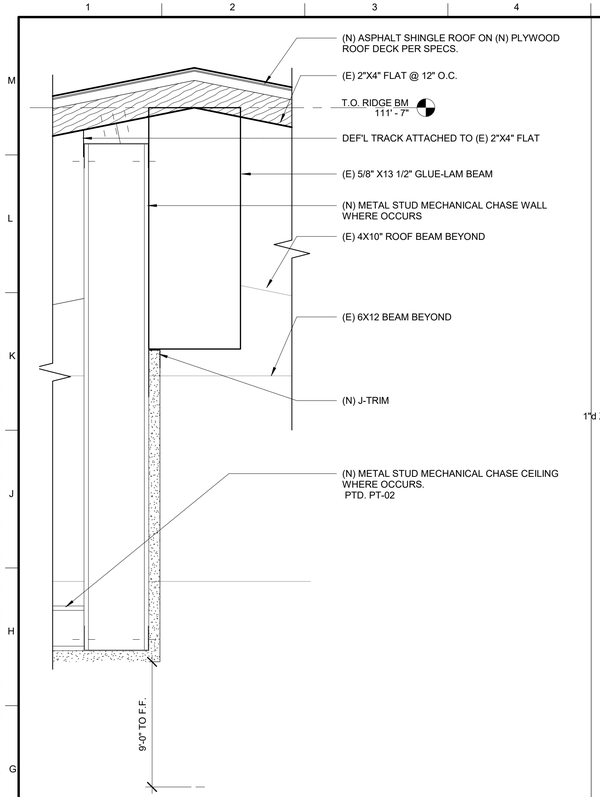

10 MECHANICAL CHASE AT BEAM
3" = 1'-0"

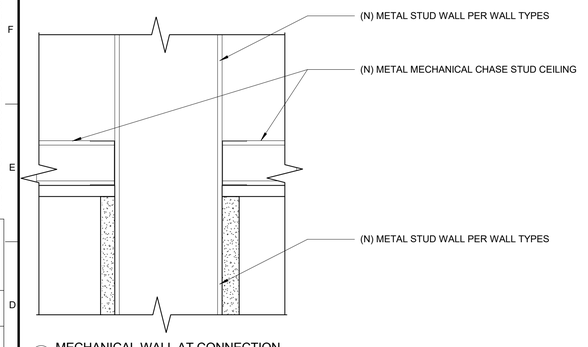

11 MECHANICAL WALL AT CONNECTION
3" = 1'-0"

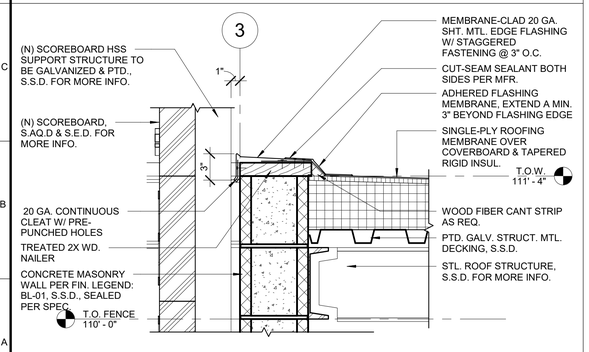

12 TOP OF WALL FLASHING DETAIL 2
1 1/2" = 1'-0"

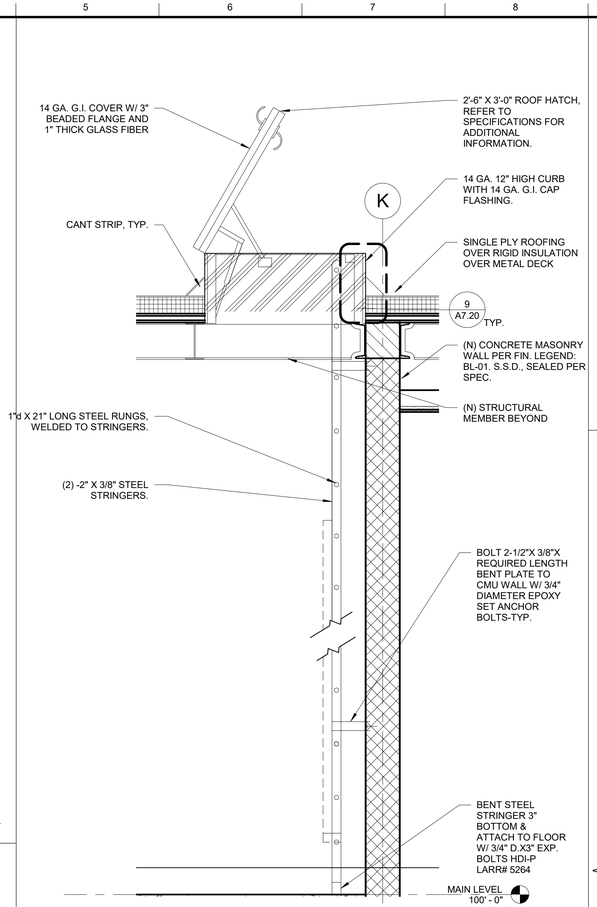

8 ROOF HATCH DETAIL
3/4" = 1'-0"

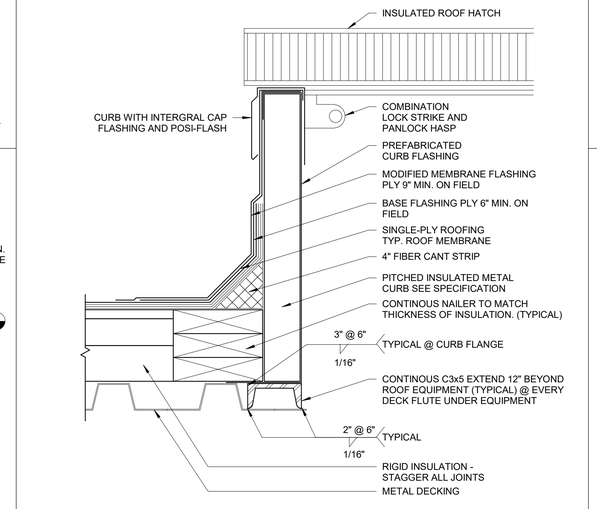

9 INSULATED ROOF HATCH DETAIL-TYP
3" = 1'-0"

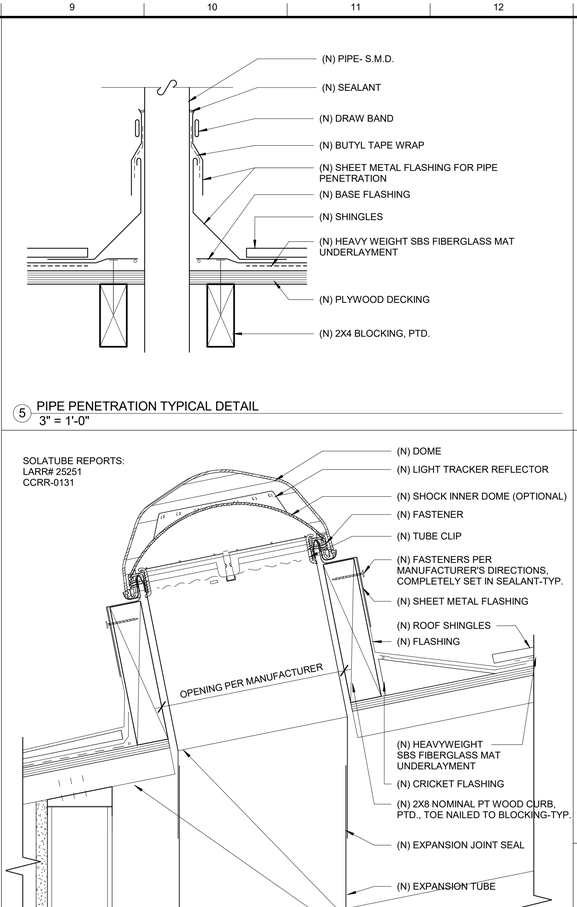

5 PIPE PENETRATION TYPICAL DETAIL
3" = 1'-0"

6 SOLATUBE DETAIL
3" = 1'-0"

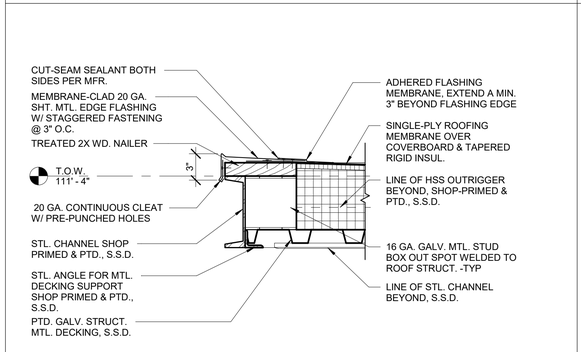

7 ROOF EAVE DETAIL
1 1/2" = 1'-0"

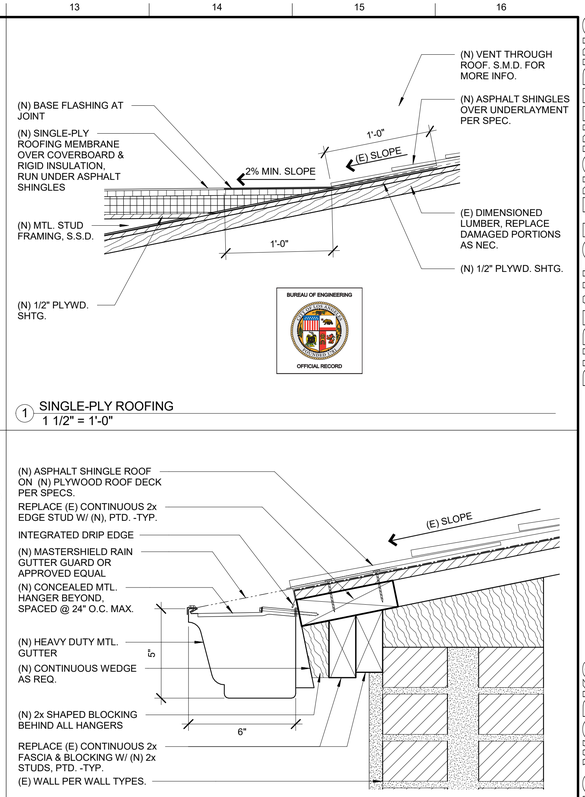

1 SINGLE-PLY ROOFING
1 1/2" = 1'-0"

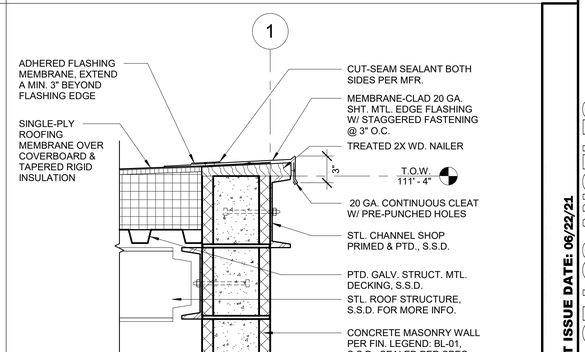

2 RAIN GUTTER DETAIL
3" = 1'-0"

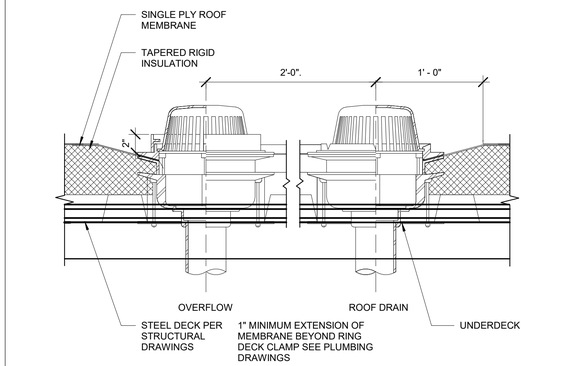

3 ROOF DRAIN AND OVERFLOW DETAIL
1 1/2" = 1'-0"

4 TOP OF WALL FLASHING DETAIL
1 1/2" = 1'-0"

THE CITY OF LOS ANGELES OR ITS OFFICERS OR AGENTS SHALL NOT BE RESPONSIBLE FOR THE ACCURACY OR COMPLETENESS OF ELECTRONIC COPIES OF THIS PLAN SHEET.

TTLB TEMPLATE REVISION DATE: 02/2013
SHEET ISSUE DATE: 01/04/18
FILE PATH: BIM 360://Granada Hills Pool Renovation/A_Granada-Hills_2017.rvt

REVISION DATES (DESIGN STAGE ONLY)

BUREAU OF ENGINEERING
OFFICIAL RECORD

ENGINEERING
CITY OF LOS ANGELES

BUREAU OF ENGINEERING

NO.	REVISION DESCRIPTION	DATE	BY

BUILDING NO. -

INDEX NO. RP-300118

LICENSED ARCHITECT JOHN P. SPARANO No. C-26244 EXP. 1-30-21 STATE OF CALIFORNIA

DEPARTMENT OF PUBLIC WORKS
CITY OF LOS ANGELES

GARY LEE MOORE, PE, ENV SP
CITY ENGINEER

		DATE:
ARCHITECT/ENGINEER:	JOHN SPARANO ARCHITECTURAL DIVISION	03/03/20
	LIC. NO. C-26244	03/03/20
DESIGNED BY:	SPARANO + MOONEY ARCHITECTURE	03/03/20
DRAWN BY:	JORGE BELTRAN	03/03/20
CHECKED BY:	LUDWING JUAREZ	03/03/20
APPROVED BY:		

VERTICAL CONTROL:
HORIZONTAL CONTROL:

SHEET TITLE: ROOF DETAILS

PROJECT: GRANADA HILLS POOL AND BATHHOUSE REPLACEMENT PROJECT

ADDRESS: 16730 CHATSWORTH STREET GRANADA HILLS, CA 91344

BID SET
PROJECT ISSUE DATE: 06/22/21.

WORK ORDER NO. #E170517
PLAN FILE NO. #308
DRAWING NO. A7.20
SHEET O F SHEETS

PLOTTED:6/18/2020 1:23:12 PM

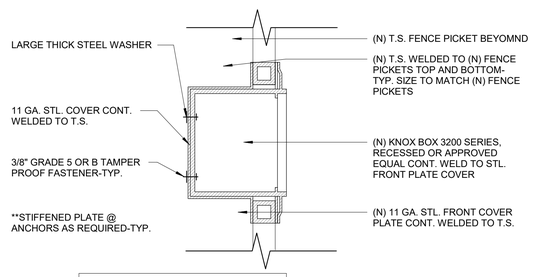

NOTE: DIMENSIONS ARE ROUGH. TRUE DIMENSIONS TO BE COORDINATED W/ MANUFACTURER AND PROPER SHOP DRAWINGS GENERATED FOR APPROVAL

*ALL STEEL MATERIAL IS TO BE GALVANIZED AND PAINTED W/ ANTI CORROSIVE PAINT

8 KNOX BOX ELEV DETAIL1 - Section 1
3" = 1'-0"

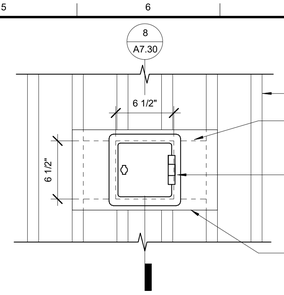

NOTE: DIMENSIONS ARE ROUGH. TRUE DIMENSIONS TO BE COORDINATED W/ MANUFACTURER AND PROPER SHOP DRAWINGS GENERATED FOR APPROVAL

*ALL STEEL MATERIAL IS TO BE GALVANIZED AND PAINTED W/ ANTI CORROSIVE PAINT

7 KNOX BOX ELEV DETAIL
1 1/2" = 1'-0"

NOT USED

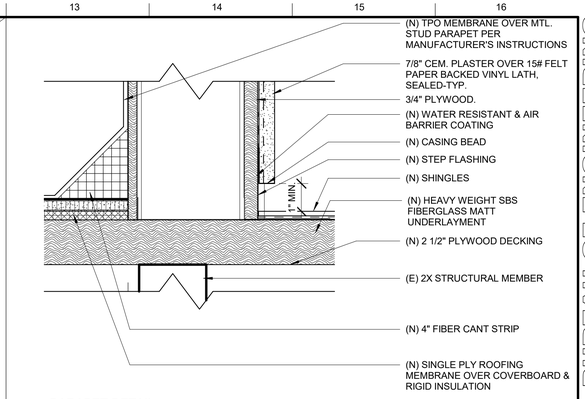

1 PARAPET DETAIL
3" = 1'-0"

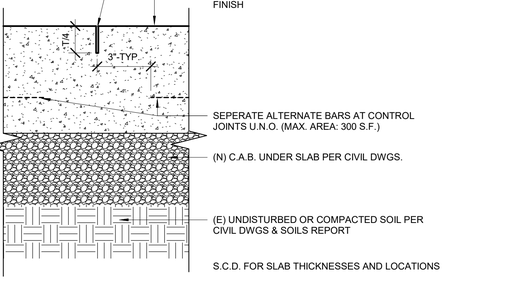

SURFACE MOUNT FRONT VIEW

KNOX BOX 3200 HINGED DOOR SURFACE MOUNT

SURFACE MOUNT SECTION VIEW

9 KNOX BOX WALL MOUNTED
6" = 1'-0"

NOTES:
1. PROVIDE EXPANSION JOINT AGAINST ALL PREVIOUSLY CONSTRUCTED FIXED ELEMENTS
2. MAINTAIN LINE AND GRADE AT EXPANSION JOINTS
3. S.C.D. & S.AQ.D. FOR MORE INFO.
4. S.AQ.D. FOR POOL GUTTER DIMENSIONS

4 POOL DECK SLOT DRAIN SECTION
1 1/2" = 1'-0"

NOTE:
INSTALL SLOT DRAIN AND PLACE WITH TWO SACK SLURRY PRIOR TO PLACING HARDSCAPE

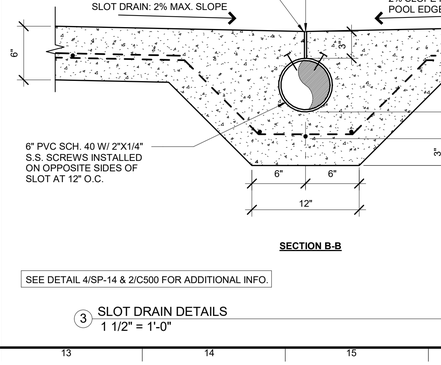

PLAN VIEW

SEE DETAIL 4/SP-14 & 2/C500 FOR ADDITIONAL INFO.

SECTION A-A

10 CONTROL JOINT DETAIL
3" = 1'-0"

NOTE:
1. PROVIDE EXANSION JOINT AGAINST ALL PREVIOUSLY CONSTRUCTED FIXED ELEMENTS.
2. MAINTAIN LINE AND GRADE AT EXPANSION JONTS.
3. S.C.D. FOR SLAB THICNESS AND LOCATIONS.

6 POOL DECK EXPANSION JOINT
3" = 1'-0"

S.C.D. FOR SLAB THICKNESSES AND LOCATIONS

5 TOOLED JOINT DETAIL
3" = 1'-0"

SECTION B-B

SEE DETAIL 4/SP-14 & 2/C500 FOR ADDITIONAL INFO.

3 SLOT DRAIN DETAILS
1 1/2" = 1'-0"

THE CITY OF LOS ANGELES OR ITS OFFICERS OR AGENTS SHALL NOT BE RESPONSIBLE FOR THE ACCURACY OR COMPLETENESS OF ELECTRONIC COPIES OF THIS PLAN SHEET.

TTLB TEMPLATE REVISION DATE: 02/2013
SHEET ISSUE DATE: 01/04/18
FILE PATH: BIM 360://Granada Hills Pool Renovation/A_Granada-Hills_2017.rvt

REVISION DATES (DESIGN STAGE ONLY)

BUREAU OF ENGINEERING
OFFICIAL RECORD

DEPARTMENT OF PUBLIC WORKS
BUREAU OF ENGINEERING
ENGINEERING
CITY OF LOS ANGELES

NO.	REVISION DESCRIPTION	DATE	BY

BUILDING NO. -
INDEX NO. RP-300118

LICENSED ARCHITECT
JOHN P. SPARANO
No. C-26244
EXP. 1-30-21
STATE OF CALIFORNIA

DEPARTMENT OF PUBLIC WORKS
BUREAU OF ENGINEERING
GARY LEE MOORE, PE, ENV SP
CITY ENGINEER
DATE:

ARCHITECT/ENGINEER:	JOHN SPARANO	LIC. NO.: C-26244	03/03/20
	ARCHITECTURAL DIVISION		
DESIGNED BY:	SPARANO + MOONEY ARCHITECTURE		03/03/20
DRAWN BY:	JORGE BELTRAN		03/03/20
CHECKED BY:	LUDWING JUAREZ		03/03/20
APPROVED BY:			03/03/20

CITY OF LOS ANGELES
VERTICAL CONTROL:
HORIZONTAL CONTROL:
SHEET TITLE: EXTERIOR DETAILS
PROJECT: GRANADA HILLS POOL AND BATHHOUSE REPLACEMENT PROJECT
ADDRESS: 16730 CHATSWORTH STREET GRANADA HILLS, CA 91344

BID SET
PROJECT ISSUE DATE: 06/22/21

WORK ORDER NO. #E170517
PLAN FILE NO. #308
DRAWING NO. A7.30
SHEET O F SHEETS

PLOTTED:8/18/2020 1:23:24 PM

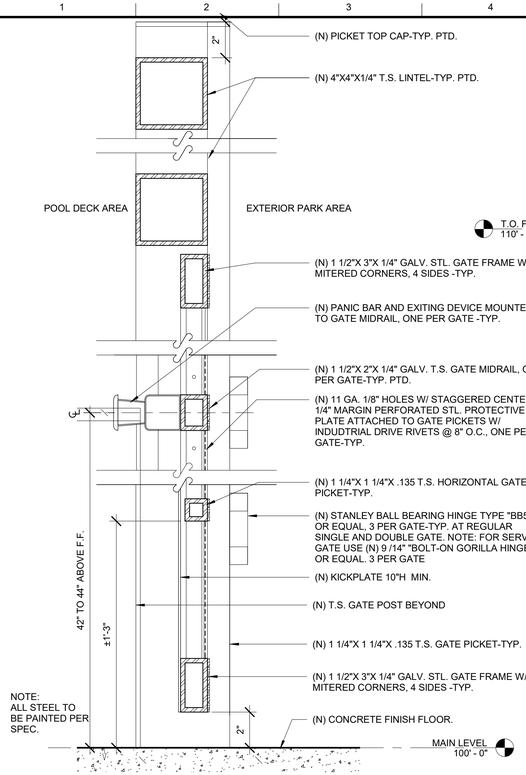

8 GATE HEAD/ SILL DETAIL
3" = 1'-0"

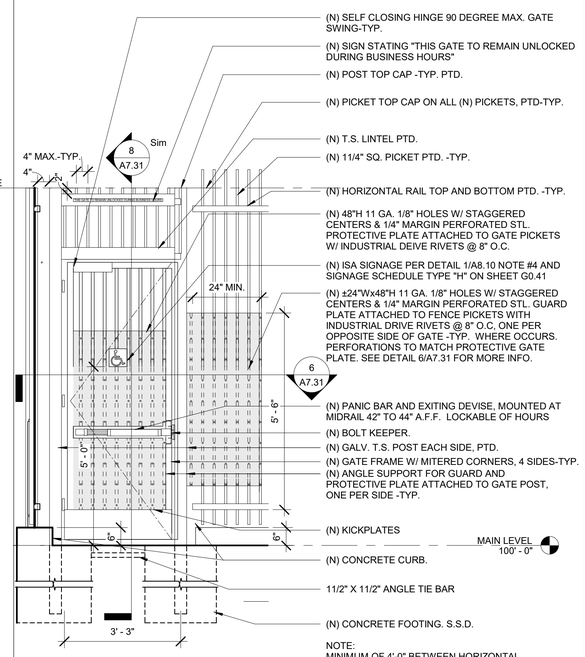

5 SINGLE GATE ELEVATION
1/2" = 1'-0"

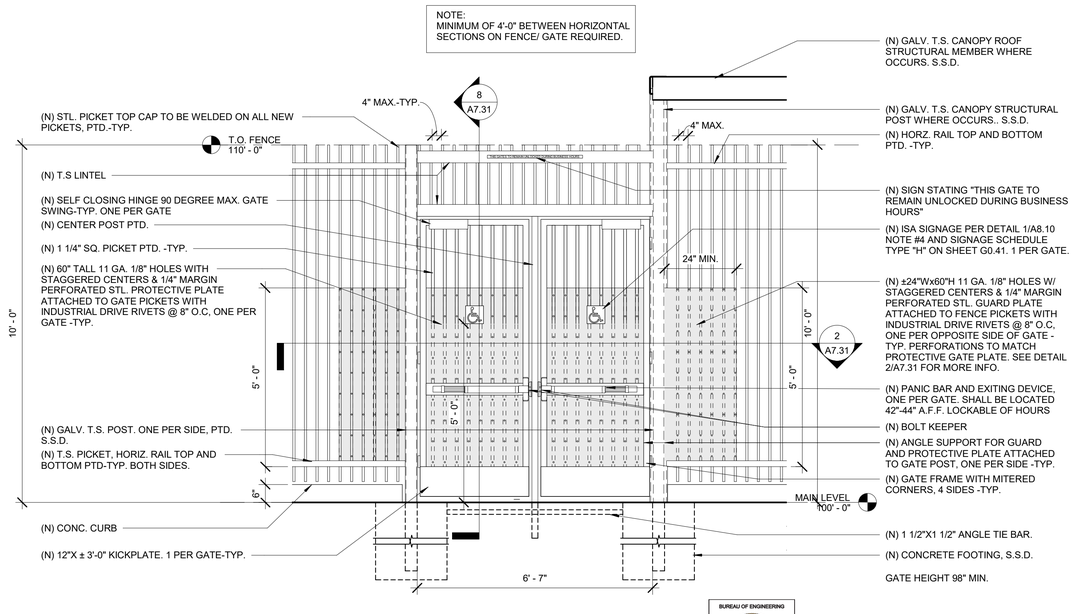

1 DOUBLE GATE ELEVATION
1/2" = 1'-0"

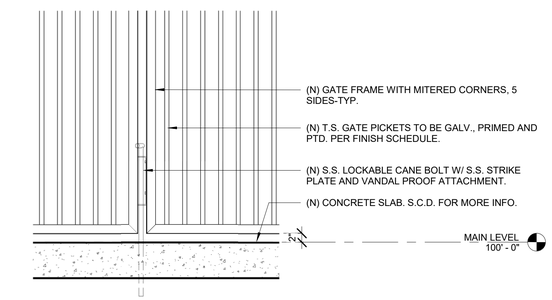

9 SERVICE GATE CANE BOLT DETAIL
3/4" = 1'-0"

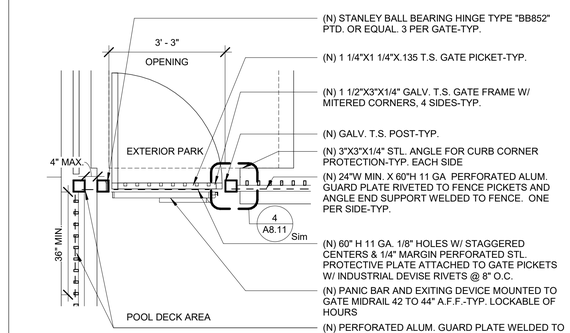

6 SINGLE GATE PLAN
1/2" = 1'-0"

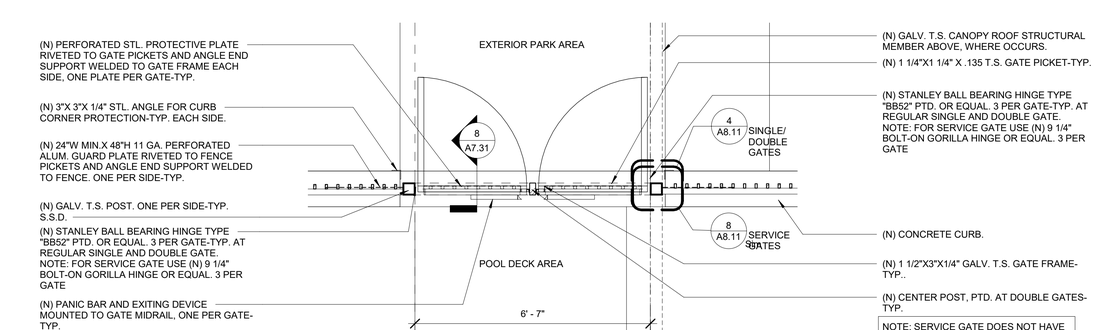

2 DOUBLE GATE PLAN
1/2" = 1'-0"

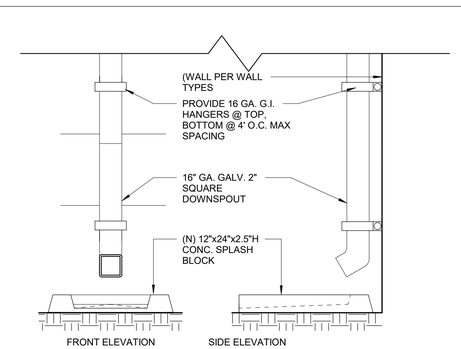

10 DOWNSPOUT BASE DETAIL
3" = 1'-0"

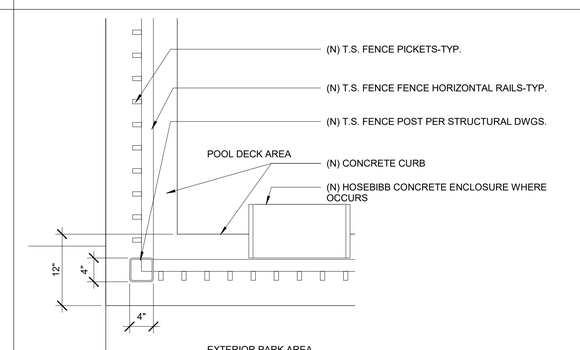

7 T.S. FENCE CORNER DETAIL
1" = 1'-0"

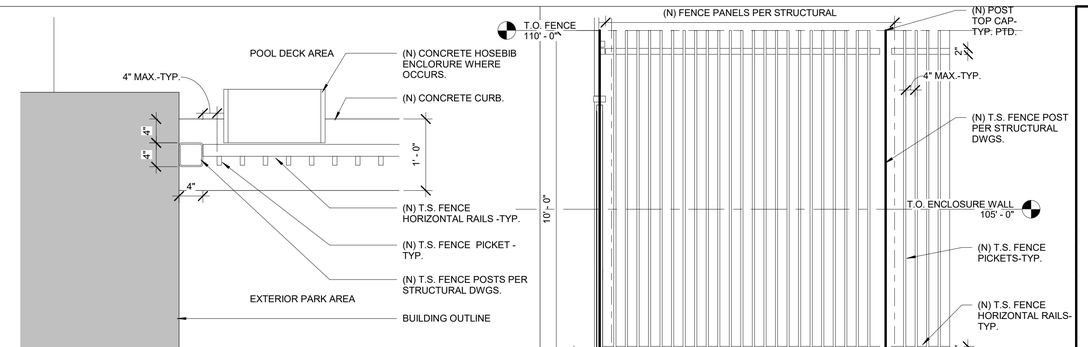

4 T.S. FENCE EDGE DETAIL
1" = 1'-0"

3 PERIMETER FENCE ELEVATION
1/2" = 1'-0"

THE CITY OF LOS ANGELES OR ITS OFFICERS OR AGENTS SHALL NOT BE RESPONSIBLE FOR THE ACCURACY OR COMPLETENESS OF ELECTRONIC COPIES OF THIS PLAN SHEET.

TTLB TEMPLATE REVISION DATE: 02/2013
SHEET ISSUE DATE: 11/04/18
FILE PATH: BIM 360://Granada Hills Pool Renovation/A_Granada-Hills_2017.rvt

REVISION DATES (DESIGN STAGE ONLY)

BUREAU OF ENGINEERING
OFFICIAL RECORD

ENGINEERING
CITY OF LOS ANGELES

BUREAU OF ENGINEERING

NO.	REVISION DESCRIPTION	DATE	BY

BUILDING NO. -

INDEX NO. RP-300118

LICENSED ARCHITECT
GARY L. P. SPARANO
No. C-26244
EXP. 1-30-21
STATE OF CALIFORNIA

DEPARTMENT OF PUBLIC WORKS
CITY OF LOS ANGELES

GARY LEE MOORE, PE, ENV SP
CITY ENGINEER

		DATE:
ARCHITECTURAL DIVISION		
ARCHITECT/ENGINEER:	JOHN SPARANO	LIC. NO.: C-26244
DESIGNED BY:	SPARANO + MOONEY ARCHITECTURE	03/03/20
DRAWN BY:	JORGE BELTRAN	03/03/20
CHECKED BY:	LUDWING JUAREZ	03/03/20
APPROVED BY:	JOHN SPARANO	03/03/20

VERTICAL CONTROL:
HORIZONTAL CONTROL:

SHEET TITLE: EXTERIOR DETAILS

PROJECT: GRANADA HILLS POOL AND BATHHOUSE REPLACEMENT PROJECT

ADDRESS: 16730 CHATSWORTH STREET GRANADA HILLS, CA 91344

BID SET
PROJECT ISSUE DATE: 06/22/21

WORK ORDER NO.
#E170517

PLAN FILE NO.
#308

DRAWING NO.
A7.31
SHEET O F SHEETS

PLOTTED:8/18/2020 1:23:34 PM

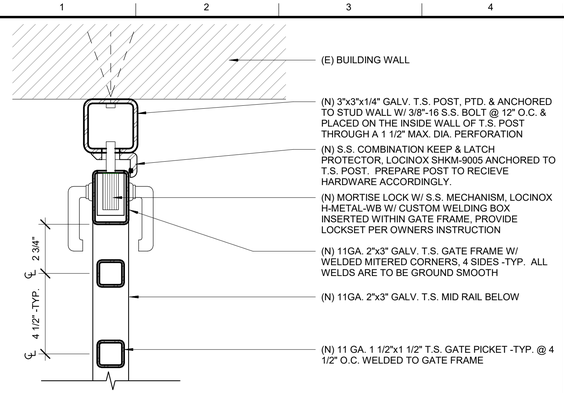

9 BUILDING-GATE JAMB DETAIL 3
3" = 1'-0"

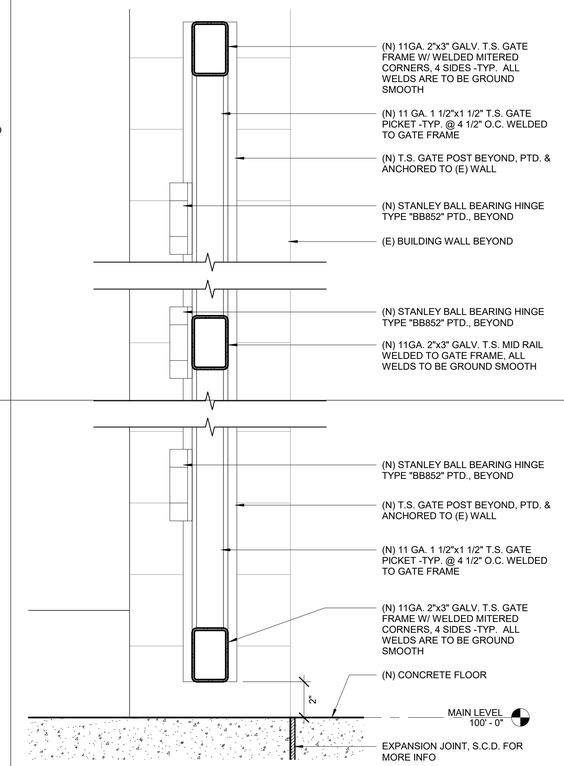

8 BUILDING-GATE SECTION
3" = 1'-0"

NOTES:

1. INSTALL DRINKING FOUNTAIN PER MANUFACTURER'S RECOMMENDATIONS AND COMPLY WITH ADA REQUIREMENTS PER CBC SECTION 11B-602.
2. THE DRINKING FOUNTAIN BUBBLER SHALL BE ACTIVATED BY A MANUALLY OPERATED SYSTEM NOT REQUIRING A FORCE GREATER THAN 5 LB/FT., THAT IS LOCATED WITHIN 6" OF THE FRONT EDGE OF THE FOUNTAIN.
3. THE SPOUT SHALL PROVIDE A FLOW OF WATER AT LEAST 4" HIGH SO AS TO ALLOW THE INSERTION OF A CUP OR GLASS UNDER THE FLOW OF WATER. ON AN ACCESSIBLE DRINKING FOUNTAIN WITH A ROUND OR OVAL BOWL, THE SPOUT MUST BE POSITIONED SO THE FLOW OF WATER IS WITHIN 3" OF THE FRONT OF EDGE OF FOUNTAIN.
4. SPOUT OUTLETS SHALL BE 36" MAX. ABOVE THE FINISH FLOOR.
5. THE SPOUT SHALL BE LOCATED 15" MIN. FROM THE VERTICAL SUPPORT AND 5" MAX. FROM FRONT EDGE OF THE UNIT, INCLUDING BUMPERS.
6. WHEN USED, WING WALLS OR BARRIERS FOR PEDESTRIAN PROTECTION THEU SHALL PROJECT HORIZONTALLY AT LEAST AS FAR AS THE DRINKING FOUNTAIN AND WITHIN 6" VERTICALLY FROM THE FLOOR OR GROUND SURFACE.

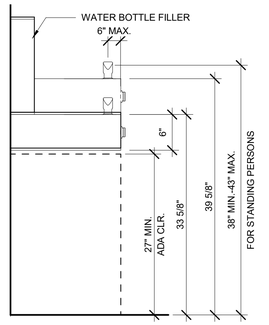

5 D.F. SIDE ELEVATION DETAIL
1" = 1'-0"

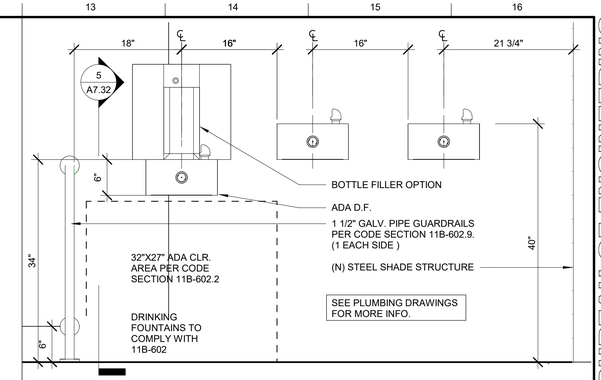

1 D.F. ELEVATION DETAIL
1" = 1'-0"

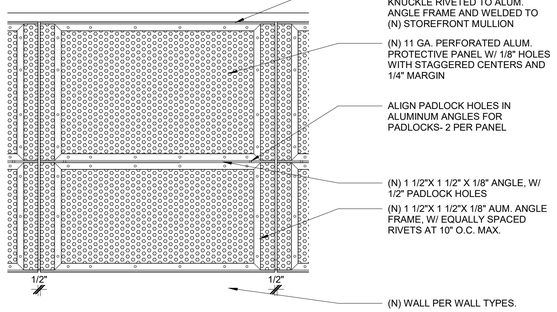

10 ELEVATION- CLOSED PANEL
3/4" = 1'-0"

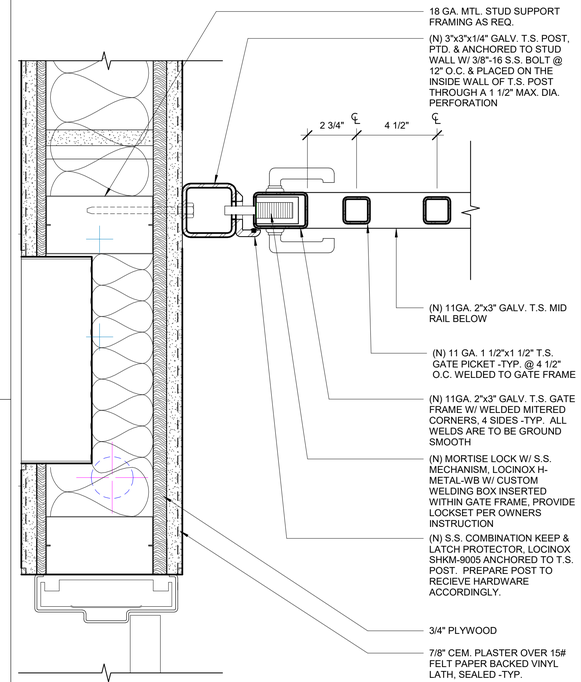

6 BUILDING-GATE JAMB DETAIL
3" = 1'-0"

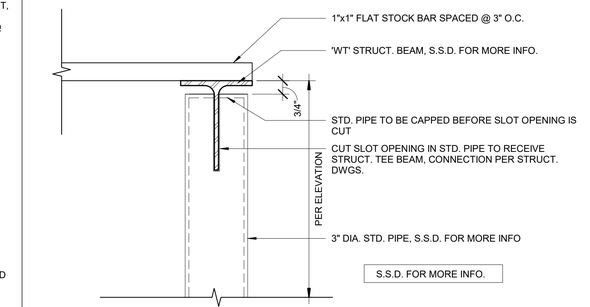

2 TRELLIS WT CONNECTION
3" = 1'-0"

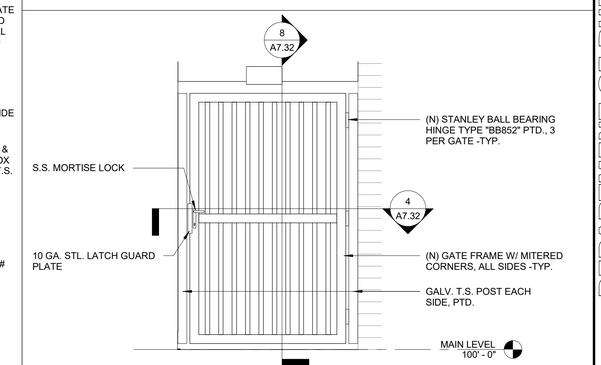

3 BUILDING SINGLE GATE ELEVATION
1/2" = 1'-0"

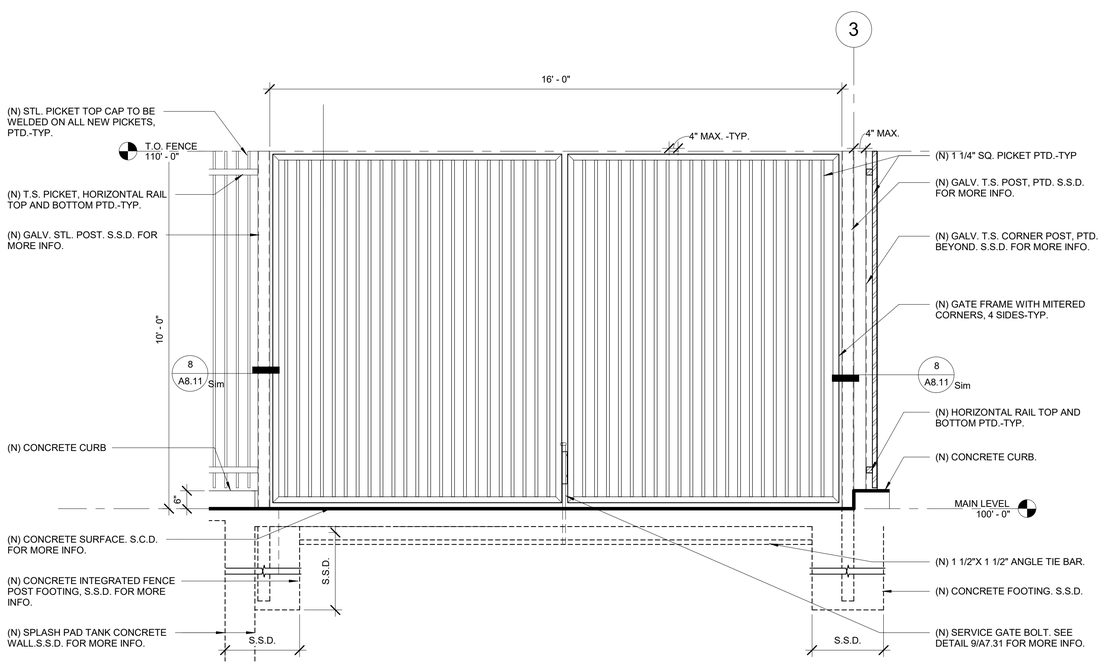

11 SERVICE GATE ELEVATION
1/2" = 1'-0"

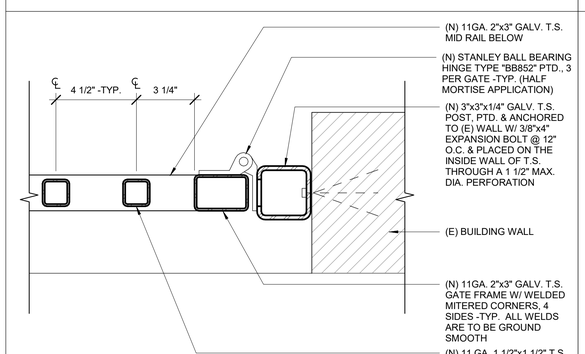

7 BUILDING-GATE JAMB DETAIL 2
3" = 1'-0"

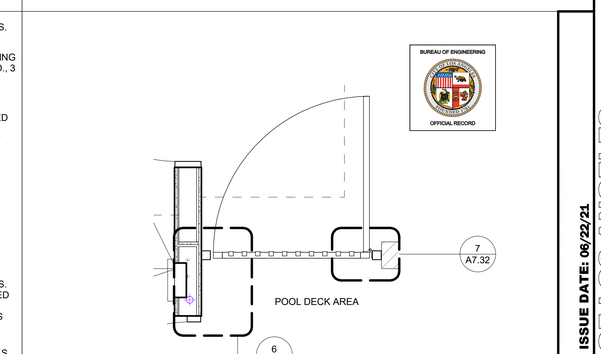

4 BUILDING-GATE SECTION DETAIL
1/2" = 1'-0"

THE CITY OF LOS ANGELES OR ITS OFFICERS OR AGENTS SHALL NOT BE RESPONSIBLE FOR THE ACCURACY OR COMPLETENESS OF ELECTRONIC COPIES OF THIS PLAN SHEET.

TTLB TEMPLATE REVISION DATE: 02/2013
SHEET ISSUE DATE: 05/10/19
FILE PATH: BIM 360://Granada Hills Pool Renovation/A_Granada-Hills_2017.rvt

REVISION DATES (DESIGN STAGE ONLY)

BUREAU OF ENGINEERING
CITY OF LOS ANGELES
ENGINEERING

NO.	REVISION DESCRIPTION	DATE	BY

BUILDING NO. -
INDEX NO. RP-300118

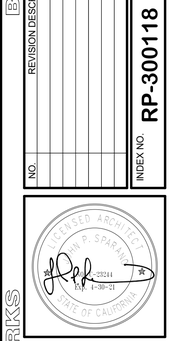

DEPARTMENT OF PUBLIC WORKS
BUREAU OF ENGINEERING
CITY OF LOS ANGELES

GARY LEE MOORE, PE, ENV SP
CITY ENGINEER

DATE: 03/03/20

ARCHITECTURAL DIVISION
ARCHITECT/ENGINEER: JOHN SPARANO LIC. NO.: C-26244
DESIGNED BY: SPARANO + MOONEY ARCHITECTURE
DRAWN BY: JORGE BELTRAN
CHECKED BY: LUDWING JUAREZ
APPROVED BY: JOHN SPARANO

VERTICAL CONTROL:
HORIZONTAL CONTROL:

SHEET TITLE: EXTERIOR DETAILS

PROJECT: GRANADA HILLS POOL AND BATHHOUSE REPLACEMENT PROJECT

ADDRESS: 16730 CHATSWORTH STREET GRANADA HILLS, CA 91344

BID SET
PROJECT ISSUE DATE: 06/22/21

WORK ORDER NO. #E170517
PLAN FILE NO.
DRAWING NO. A7.32
SHEET 0 OF SHEETS

PLOTTED:8/18/2020 1:23:43 PM

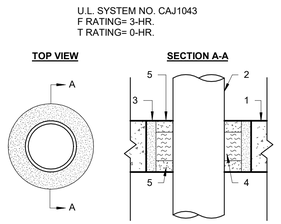

U.L. SYSTEM NO. CAJ1043
F RATING= 3-HR.
T RATING= 0-HR.

1. A. MIN. 4 1/2" THICK CONCRETE FLOOR..
   B. MIN. 4 1/2" THICK CONCRETE WALL.
   C. ANY U.L. CLASSIFIED CONCRETE BLOCK WALL..
2. 4" DIAM. (OR SMALLER) STEEL PIPE, COPPER PIPE, EMT OR CONDUIT.
3. MORTAR.
4. MIN. 3" THICK MINERAL WOOL (MIN. 6 TO 9 PCF DENSITY) TIGHTLY PACKED.
5. MIN. 1" THICKNESS OF CAULK REQUIRED BOTH SIDES.

NOTES:
1. MAXIMUM DIAMETER OF OPENING= 6".
2. ANNULAR SPACE= MIN. 0" (POINT CONTACT), MAX. 2".
3. WALLS REQUIRE 1/2" OF SEALANT FLUSH WITH BOTH SIDES

10 WALL PENETRATION TYPICAL DETAIL
1" = 1'-0"

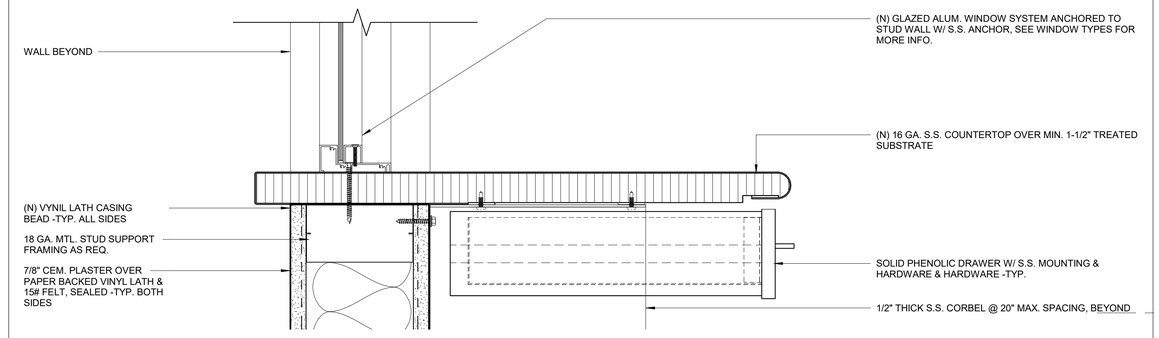

7 S.S. WINDOW COUNTERTOP DETAIL
3" = 1'-0"

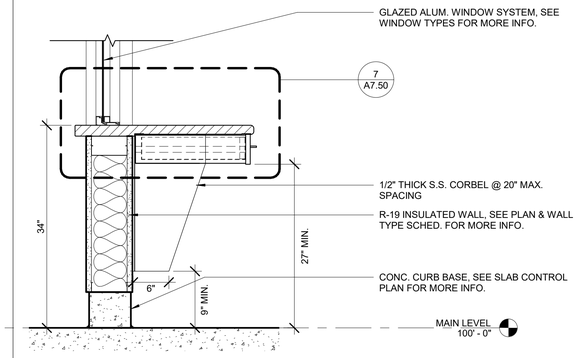

1 S.S. COUNTERTOP W/ DRAWER DETAIL
1" = 1'-0"

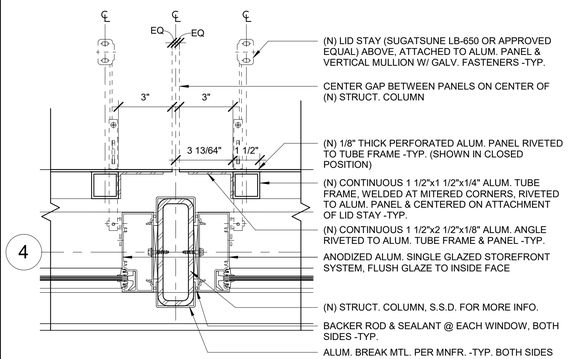

11 PANEL AT VERTICAL MULLION
3" = 1'-0"

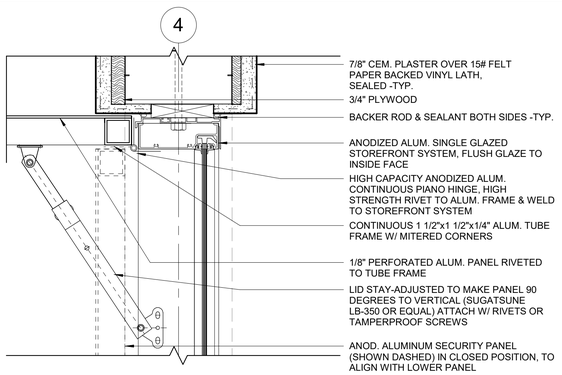

8 PANEL OPEN
3" = 1'-0"

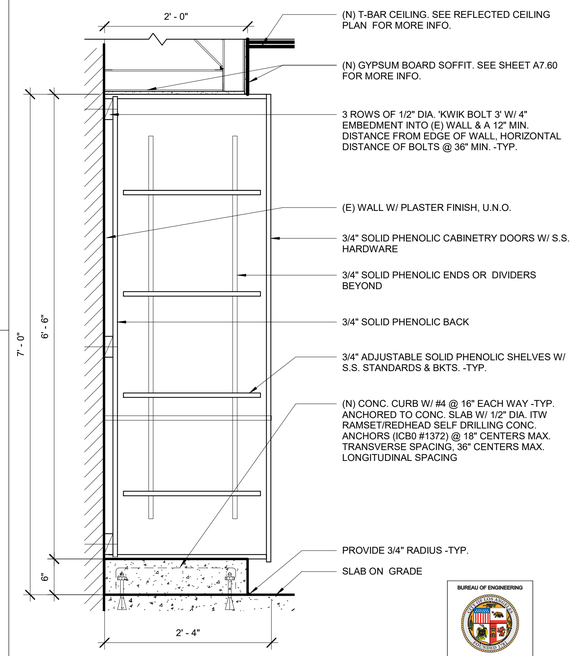

5 CABINET DETAIL
1" = 1'-0"

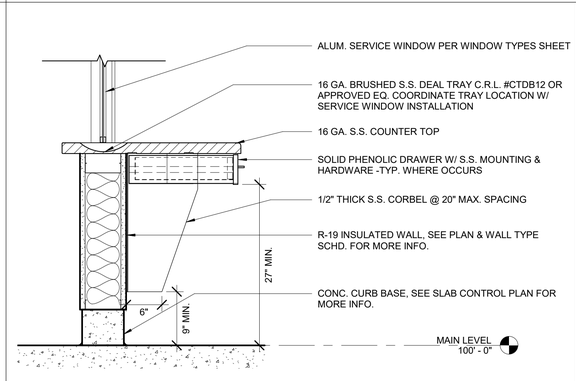

2 S.S. COUNTERTOP W/ DRAWER DETAIL2
1" = 1'-0"

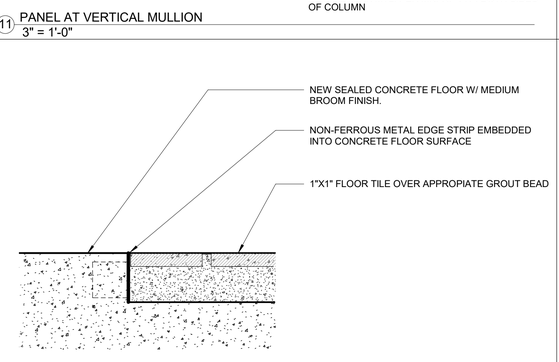

12 TILE TRANSITION DETAIL
12" = 1'-0"

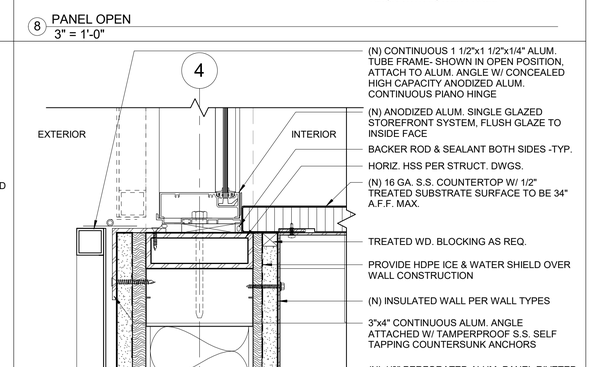

9 PANEL AT SILL DETAIL
3" = 1'-0"

3 S.S. COUNTERTOP W/ DRAWER DETAIL1
1" = 1'-0"

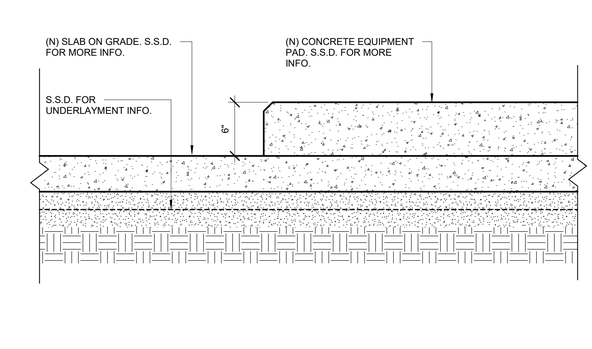

13 EQUIPMENT PAD TYPICAL DETAIL-
1 1/2" = 1'-0"

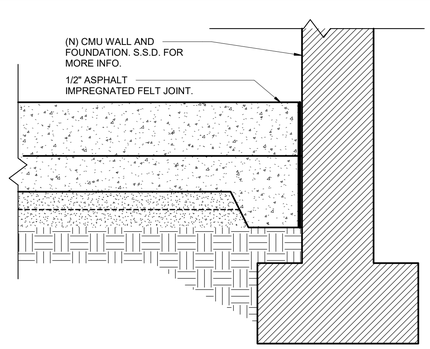

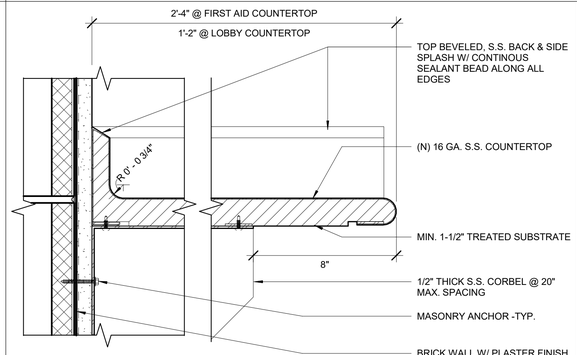

6 COUNTERTOP DETAIL
3" = 1'-0"

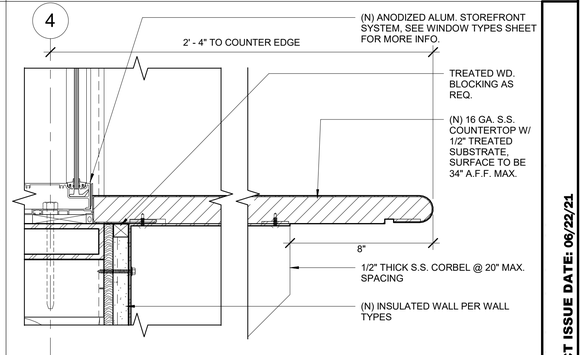

4 S.S. COUNTERTOP DETAIL
3" = 1'-0"

THE CITY OF LOS ANGELES OR ITS OFFICERS OR AGENTS SHALL NOT BE RESPONSIBLE FOR THE ACCURACY OR COMPLETENESS OF ELECTRONIC COPIES OF THIS PLAN SHEET.

TTLB TEMPLATE REVISION DATE: 02/2013
SHEET ISSUE DATE: 01/04/18
FILE PATH: BIM 360://Granada Hills Pool Renovation/A_Granada-Hills_2017.rvt

REVISION DATES (DESIGN STAGE ONLY)

BUREAU OF ENGINEERING
OFFICIAL RECORD

BID SET
PROJECT ISSUE DATE: 06/22/21

CITY OF LOS ANGELES
DEPARTMENT OF PUBLIC WORKS
BUREAU OF ENGINEERING
ENGINEERING
CITY OF LOS ANGELES

NO.	REVISION DESCRIPTION	DATE	BY

BUILDING NO. -
INDEX NO. RP-300118

LICENSED ARCHITECT
JOHN P. SPARANO
No. C-26244
EXP. 1-30-21
STATE OF CALIFORNIA

CITY ENGINEER
DATE:
VERTICAL CONTROL:
HORIZONTAL CONTROL:

SHEET TITLE:	INTERIOR DETAILS
PROJECT:	GRANADA HILLS POOL AND BATHHOUSE REPLACEMENT PROJECT
ADDRESS:	16730 CHATSWORTH STREET GRANADA HILLS, CA 91344

GARY LEE MOORE, PE, ENV SP
CITY ENGINEER

ARCHITECT/ENGINEER:	JOHN SPARANO
ARCHITECTURAL DIVISION	LIC. NO.: C-26244
DESIGNED BY:	SPARANO + MOONEY ARCHITECTURE
DRAWN BY:	JORGE BELTRAN
CHECKED BY:	LUDWING JUAREZ
APPROVED BY:	

WORK ORDER NO. #E170517
PLAN FILE NO. #308
DRAWING NO. A7.50
SHEET 0 OF SHEETS

PLOTTED:6/18/2020 1:23:52 PM

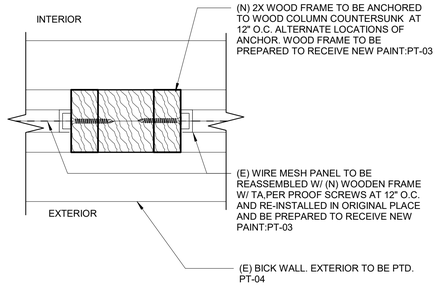

9 S.S. METAL MESH SYSTEM -TYP.
3" = 1'-0"

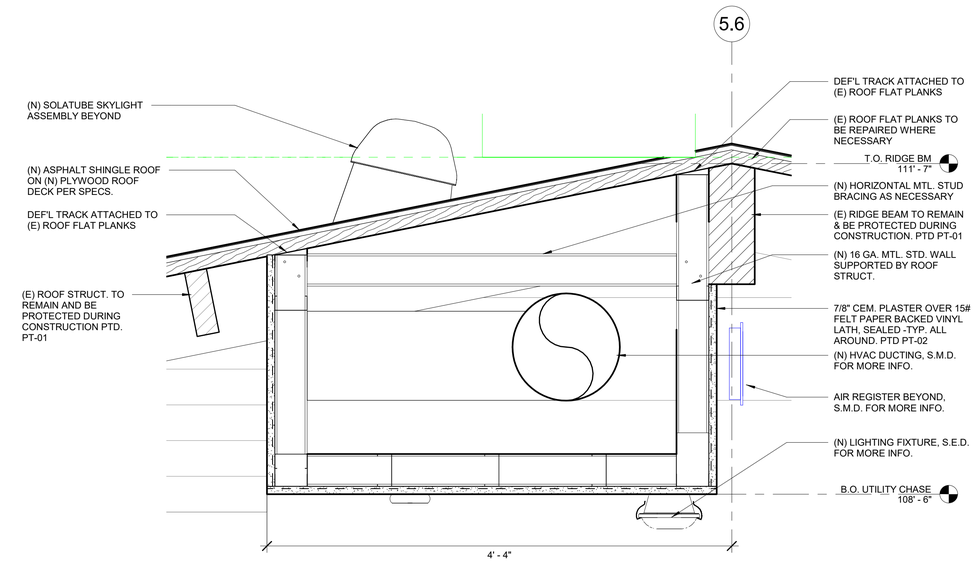

5 UTILITY CHASE
1 1/2" = 1'-0"

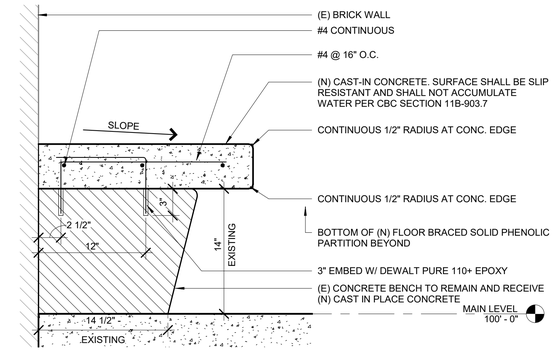

1 BENCH AT ADA CHANGING STALL
1 1/2" = 1'-0"

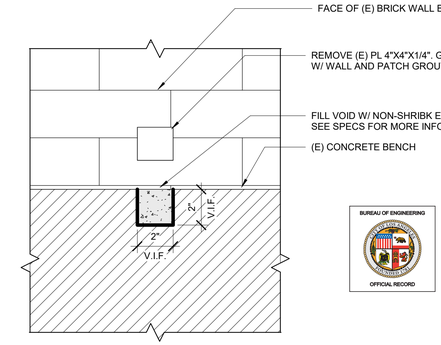

2 CONCRETE BENCH REPAIR
3" = 1'-0"

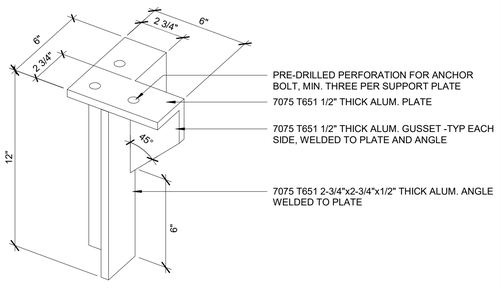

* PROVIDE SHOP DRAWINGS FOR APPROVAL PRIOR TO MANUFACTURING

A 3D - CORNER PANEL SUPPORT DET.

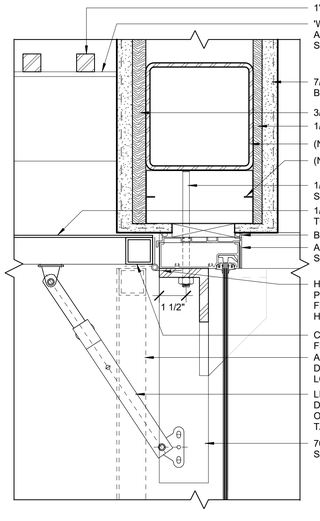

10 SECURITY PANEL CORN. SUPPORT DET.
3" = 1'-0"

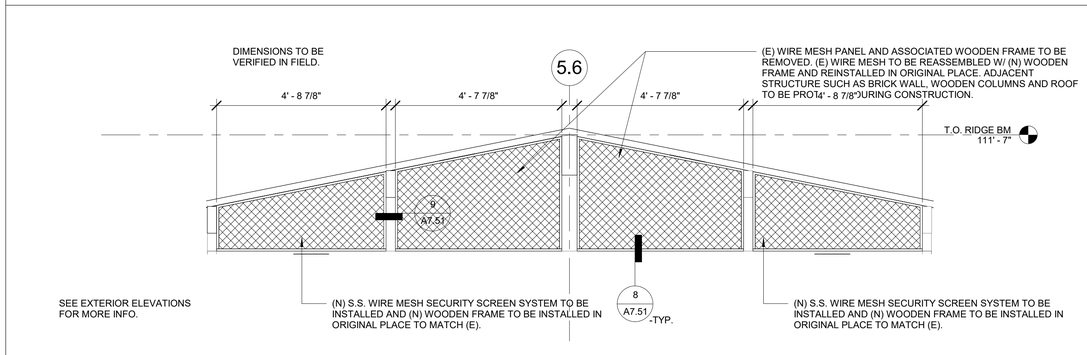

6 WIRE MESH PANELS
1/2" = 1'-0"

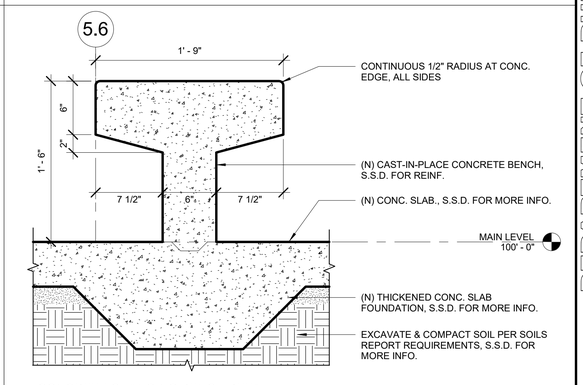

3 CONCRETE CHANGING BENCH DETAIL
1 1/2" = 1'-0"

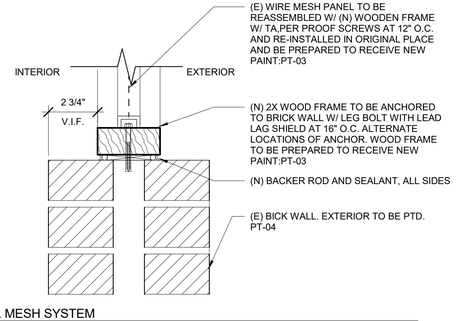

8 S.S. METAL MESH SYSTEM
3" = 1'-0"

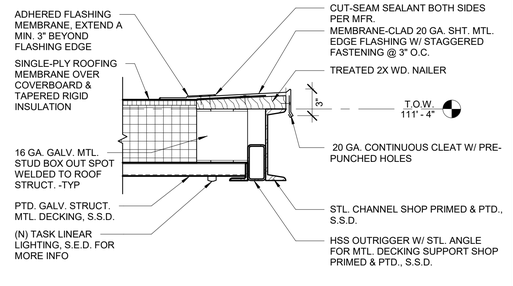

7 TOP OF WALL FLASHING DETAIL 3
1 1/2" = 1'-0"

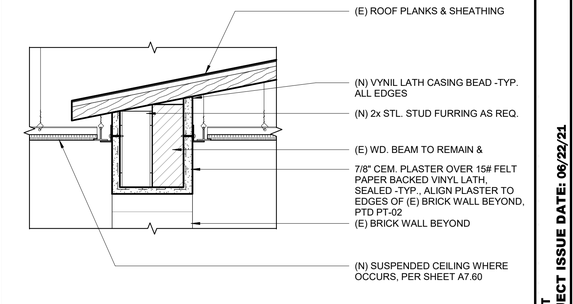

4 BEAM FURRING DETAIL
1 1/2" = 1'-0"

THE CITY OF LOS ANGELES OR ITS OFFICERS OR AGENTS SHALL NOT BE RESPONSIBLE FOR THE ACCURACY OR COMPLETENESS OF ELECTRONIC COPIES OF THIS PLAN SHEET.

TTLB TEMPLATE REVISION DATE: 02/2013
SHEET ISSUE DATE: 07/03/19
FILE PATH: BIM 360://Granada Hills Pool Renovation/A_Granada-Hills_2017.rvt

REVISION DATES (DESIGN STAGE ONLY)

BUREAU OF ENGINEERING
OFFICIAL RECORD

ENGINEERING
CITY OF LOS ANGELES

BUREAU OF ENGINEERING

NO.	REVISION DESCRIPTION	DATE	BY

BUILDING NO. -
INDEX NO. RP-300118

ENGINEER'S SEAL — JOHN P. SPARANO — LIC. NO. C-26244 — EXP. 6-30-21 — STATE OF CALIFORNIA

DEPARTMENT OF PUBLIC WORKS
CITY OF LOS ANGELES

GARY LEE MOORE, PE, ENV SP
CITY ENGINEER

		DATE:
ARCHITECT/ENGINEER:	JOHN SPARANO	LIC. NO.: C-26244
DESIGNED BY:	SPARANO + MOONEY ARCHITECTURE	03/03/20
DRAWN BY:	JORGE BELTRAN	03/03/20
CHECKED BY:	LUDWING JUAREZ	03/03/20
APPROVED BY:	JOHN SPARANO	03/03/20

ARCHITECTURAL DIVISION

VERTICAL CONTROL:
HORIZONTAL CONTROL:

SHEET TITLE: INTERIOR DETAILS

PROJECT: GRANADA HILLS POOL AND BATHHOUSE REPLACEMENT PROJECT
ADDRESS: 16730 CHATSWORTH STREET GRANADA HILLS, CA 91344

BID SET
PROJECT ISSUE DATE: 06/22/21

WORK ORDER NO. #E170517
PLAN FILE NO.
DRAWING NO. A7.51
SHEET 0 OF SHEETS

PLOTTED:8/18/2020 1:24:02 PM

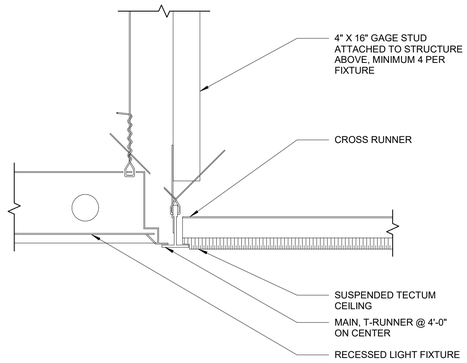

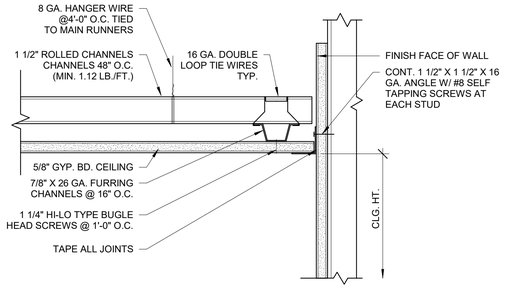

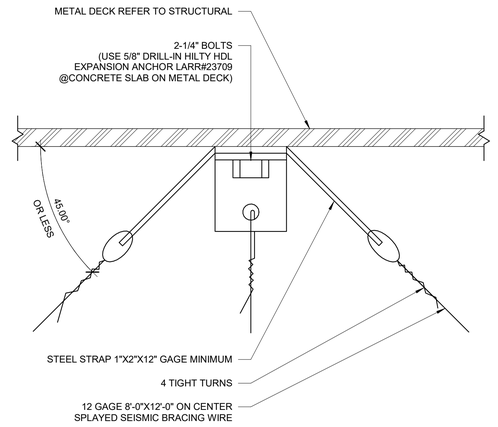

NOTE:

1. TEST 1 OUT OF 2 DRILL-IN EXP. ANCHOR FOR 440 OUNDS IN TENSON

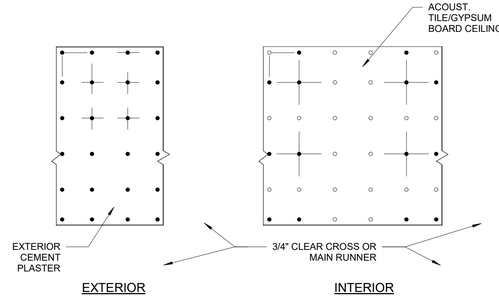

REFLECTED CEILING PLANS

NOTES:

1. TIE TWO ADJACENT WALLS TO CEILING MAIN AND CROSS RUNNER.
2. INSTALL CEILING GRID USING NO. 12 GA. SPLAY WIRE HANGERS AT 45 DEG., 90 DEG. TO EACH OTHER (4 WIRES) BEGINNING 4'-0" FROM STARTING POINT OF GRID AND TILE LAYOUT AND IN ONE DIECTIONS AT 12 FEET O.C. & 8'-0" O.C. OTHER DIRECTION THEREAFTER.
3. CEILING THAT EXCEEDS 25 FEET ON BOTH DIRECTIONS MUST HAVE A MINIMUM WALL ANGLE SIZE OF AT LEAST A 2" HORIZONTAL LEG SHALL BE USED AT PERIMETER WALLS AND INTERIOR FULL HEIGHT PARTITIONS. THE FIRST CEILING TILE SHALL MAINTAIN 3/4" CLEAR FROM THE FINISH WALL SURFACE. AN EQUIVALENT ALTERNATIVE DETAIL THAT WILL PROVIDE SUFFICIENT MOVEMENT DUE TO THE ANTICIPATED LATERAL BUILDING DISPLACEMENT MAY BE USED IN LIEU OF THE LONG LEG ANGLE SUBJECT TO THE APPROVAL OF THE SUPPERINTENDENT OF BUILDING.
4. CEILING SUSPENSION SYSTEMS SHALL BE CONNECTED AND BRACED DIRECTLY TO THE STRUCTURE AT THE MEANS OF EGRESS SERVING AN OCCUPANT LOAD OF 30 OR MORE AND AT LOBBIES ACCESSORY TO GROUP OCCUPANCIES. SPACING OF VERTICAL HANGERS SHALL NOT EXCEED 2 FEET ON CENTER ALONG THE ENTIRE LENGTH OF THE MEANS OF EGRESS OR LOBBY. THESE PROVISIONS SHALL ONLY BE REQUIRED WHEN THE DISTANCE BETWEEN THE STRUCTURAL DECK AND THE SUSPENDED CEILING EXCEEDS 4 FEET.

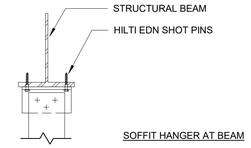

SOFFIT HANGER AT BEAM

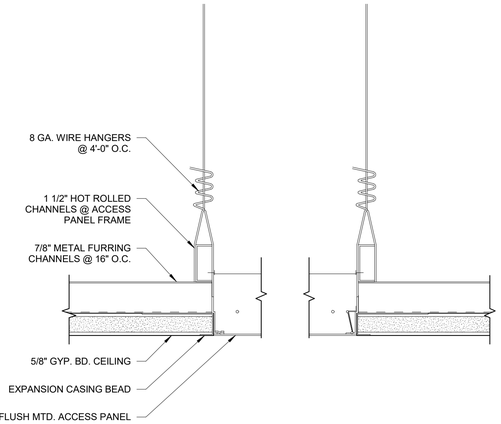

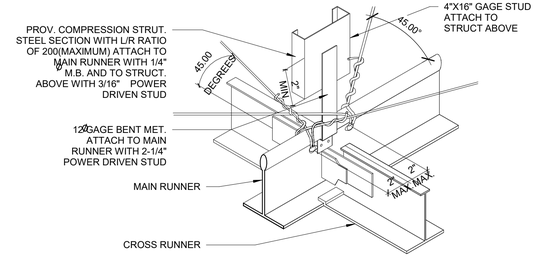

NOTES:

1. #12 GAGE SPLAY WIRE BRACING IN PLANE OF EACH RUNNER VERTICAL ANGLE -45 AT EVERY 44 SQ.FT. OF SUSPENDED ACOUSTICAL CEILING. PERIMETER END BRACING STARTS 4'-0" FROM WALL AND 12'-0" ON CENTER TO ROOMS.
2. PROVIDE UNISTRUT HORIZONTAL MEMBERS TO SUPPORT SPLAY WIRES WHENEVER THERE IS A CONFLICT WITH DUCT LOCATION AND/OR FLEXIBLE PIPING.
3. AT PLASTER SOFFIT @ ROOF PROVIDE THE FLOOWING:
   a) COMPRESSION STRUTS @ 4'-0" X 4'-0"
   b) P1001 UNISTRUT CEILING MAIN RUNNERS @ 4'-0" ON CENTER
   c) 12 GAGE WIRE BRACINGS (4'-0" X 4'-0" MODULE)

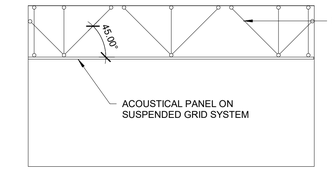

SECTION

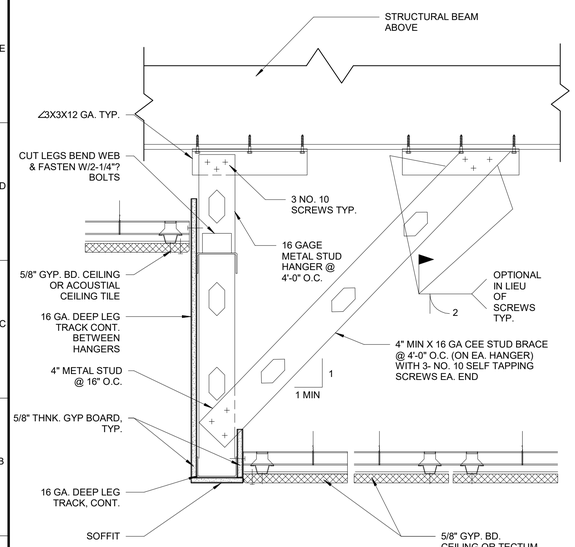

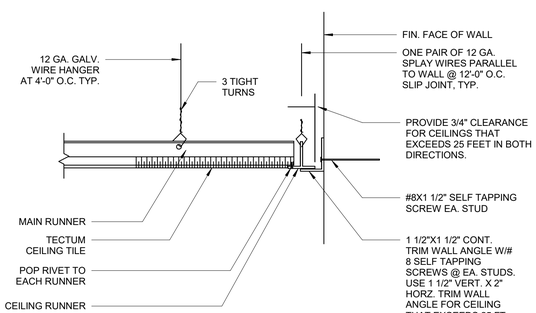

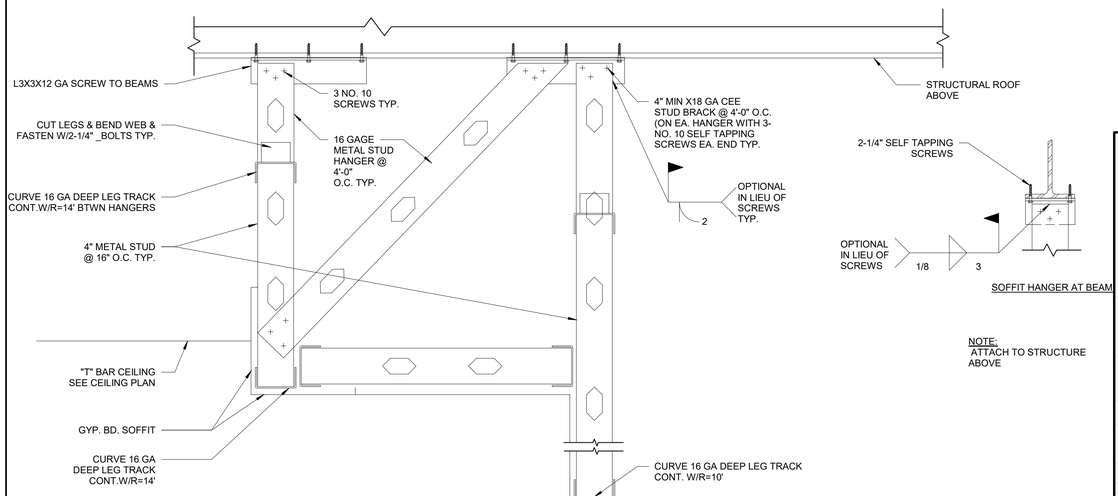

SOFFIT HANGER AT BEAM

NOTE:
ATTACH TO STRUCTURE ABOVE

BID SET
PROJECT ISSUE DATE: 06/22/21

CITY OF LOS ANGELES
DEPARTMENT OF PUBLIC WORKS
BUREAU OF ENGINEERING

ENGINEERING
CITY OF LOS ANGELES

NO.	REVISION DESCRIPTION	DATE	BY

BUILDING NO. -
INDEX NO. RP-300118

LICENSED ARCHITECT — JOHN P. SPARANO — No. C-26244 — EXP. 1-30-21 — STATE OF CALIFORNIA

GARY LEE MOORE, PE, ENV SP
CITY ENGINEER

		DATE:
ARCHITECTURAL DIVISION		
ARCHITECT/ENGINEER:	JOHN SPARANO	LIC. NO.: C-26244
DESIGNED BY:	SPARANO + MOONEY ARCHITECTURE	03/03/20
DRAWN BY:	JORGE BELTRAN	03/03/20
CHECKED BY:	LUDWING JUAREZ	03/03/20
APPROVED BY:		03/03/20

VERTICAL CONTROL:
HORIZONTAL CONTROL:

SHEET TITLE: TYPICAL CEILING DETAILS

PROJECT: GRANADA HILLS POOL AND BATHHOUSE REPLACEMENT PROJECT

ADDRESS: 16730 CHATSWORTH STREET GRANADA HILLS, CA 91344

WORK ORDER NO. #E170517
PLAN FILE NO.
DRAWING NO. A7.60
SHEET OF SHEETS

BUREAU OF ENGINEERING — OFFICIAL RECORD

PLOTTED:8/18/2020 1:24:06 PM

THE CITY OF LOS ANGELES OR ITS OFFICERS OR AGENTS SHALL NOT BE RESPONSIBLE FOR THE ACCURACY OR COMPLETENESS OF ELECTRONIC COPIES OF THIS PLAN SHEET.

TTLB TEMPLATE REVISION DATE: 02/2013
SHEET ISSUE DATE: 02/17/09
FILE PATH: BIM 360://Granada Hills Pool Renovation/A_Granada-Hills_2017.rvt

REVISION DATES: (DESIGN STAGE ONLY)

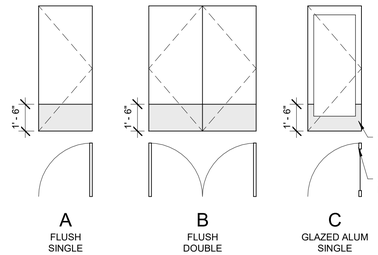

A — FLUSH SINGLE

B — FLUSH DOUBLE

C — GLAZED ALUM SINGLE

NOTE
ALL DOORS, TRIMS, GATES, PERIMETER FENCING, TRELLIS, AND STRUCTURE FOR FUTURE PHOTOVOLTAICPANELS TO BE PTD. PT-03

1. DOORS TO RECEIVE 1'-6" S.S. KICKPLATE BOTH SIDES AS SHOWN. KICKPLATE TO BE NOTCHED WHERE LOUVERS OR GLAZING EXIST.

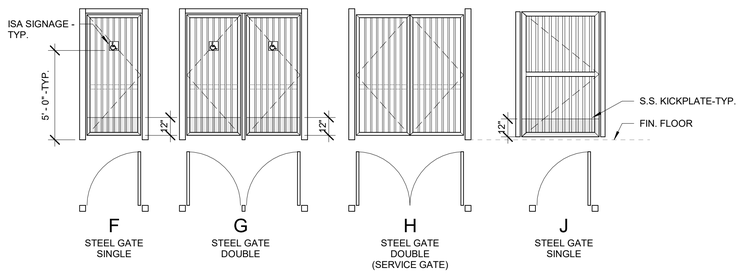

F — STEEL GATE SINGLE

G — STEEL GATE DOUBLE

H — STEEL GATE DOUBLE (SERVICE GATE)

J — STEEL GATE SINGLE

1. STEEL GATE DOUBLE TYPE "H". TO RECEIVE 48"L, 3/4" DIA. HEAVY DUTY CANE BOLT AND DROP BAR EMBED 12" MIN. SEE GATE #202 ELEVATION FOR MORE INFO.
2. STEEL GATE TYPE "F" AND "G" TO RECEIVE PANIC BAR AND EXITING DEVICE.
3. CAVITIES CREATED BY ADDED KICK PLATES SHALL BE CAPPED.
4. ALL ACCESSIBLE GATES TO RECEIVE ISA SYMBOL SIGNAGE TYPE "H" PER SIGNAGE SCHEDULE ON SHEET G0.41

1 DOOR TYPE LEGEND
1/4" = 1'-0"

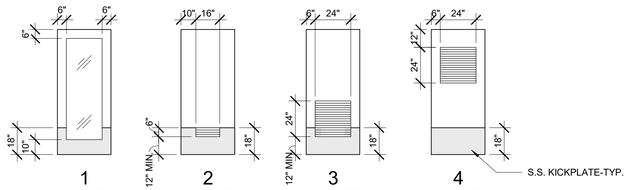

1 — NON-RATED

2 — NON-RATED

3 — NON-RATED

4 — NON-RATED

1. PROVIDE SECURITY SCREEN INSIDE ALL DOORS WITH LOUVERS
2. DOORS TO RECEIVE 1'-6" S.S. KICKPLATE BOTH SIDES AS SHOWN. KICKPLATE TO BE NOTCHED WHERE LOUVERS OR GLAZING EXIST.
3. S.M.D. SHEET M2.10 FOR FURTHER DOOR LOUVER INFO.

2 DOOR VISION/LOUVER LEGEND
1/4" = 1'-0"

DOOR SCHEDULE

DOOR NO.	ROOM NAME	DOOR DIMENSIONS WIDTH	HEIGHT	THK	TYPE	MATERIAL	FINISH	VISION/LOUVER TYPE	GLAZING TYPE	FRAME MATERIAL	FRAME FINISH	DETAIL HEAD	JAMB	JAMB	SILL	DOOR RATING	HARDWARE SET	REMARKS
100A	LOBBY/ENTRY	3' - 2"	7' - 0"	0' - 2"	A	HM	PT	-	-	HM	PT	13/A8.11	14/A8.11	14/A8.11	11/A8.11	NR	01	SILL 2" A.F.F., PROVIDE SWEEPER. PROVIDE PANIC HARDWARE
100B	LOBBY/ENTRY	3' - 2"	7' - 0"	0' - 2"	A	HM	PT	-	-	HM	PT	13/A8.11	14/A8.11	14/A8.11	11/A8.11	NR	02	SILL 2" A.F.F., PROVIDE SWEEPER. PROVIDE PANIC HARDWARE
101A	HALL	3' - 2 3/8"	7' - 6"	0' - 2"	C	ALUM	ANOD	-	-	STL	PT	-	1/A8.11	2/A8.11	-	NR	03	DOOR TO HAVE ELECTRIC STRIKE FOR REMOTE SECURITY.
101B	HALL	4' - 6 3/8"	7' - 0"	0' - 2"	J	STL	PT	-	-	STL	PT	8/A7.32	7/A7.32	6/A7.32	8/A7.32	NR	20	TUBE STEEL GATE.
102	MEN'S VESTIBULE	3' - 8"	6' - 10"	0' - 1 3/4"	A	HM	PT	-	-	HM	PT	9/A8.11	10/A8.11	10/A8.11	11/A8.11	NR	05	SILL 2" A.F.F.
103	WOMEN'S VESTIBULE	3' - 8"	6' - 10"	0' - 1 3/4"	A	HM	PT	-	-	HM	PT	9/A8.11	10/A8.11	10/A8.11	11/A8.11	NR	05	SILL 2" A.F.F.
104	STAFF RR	3' - 0"	7' - 0"	0' - 1 3/4"	A	HM	PT	-	-	HM	PT	5/A8.11	6/A8.11	6/A8.11	7/A8.11	NR	06	ALUMINUM THRESHOLD
105	CHECK-IN	3' - 0"	7' - 0"	0' - 1 3/4"	A	HM	PT	-	-	HM	PT	5/A8.11	6/A8.11	6/A8.11	7/A8.11	NR	07	ALUMINUM THRESHOLD
107	LIFEGUARD	3' - 0"	7' - 0"	0' - 2"	A	HM	PT	1	-	HM	PT	5/A8.11	6/A8.11	6/A8.11	7/A8.11	NR	08	ALUMINUM THRESHOLD
108	FAMILY/UNISEX	3' - 0"	7' - 0"	0' - 1 3/4"	A	HM	PT	-	-	HM	PT	5/A8.11	6/A8.11	6/A8.11	11/A8.11	NR	09	SILL 2" A.F.F.
109	FAMILY/UNISEX	3' - 0"	7' - 0"	0' - 1 3/4"	A	HM	PT	-	-	HM	PT	5/A8.11	6/A8.11	6/A8.11	11/A8.11	NR	09	SILL 2" A.F.F.
112	JAN	3' - 0"	7' - 0"	0' - 1 3/4"	A	HM	PT	2	-	HM	PT	5/A8.11	6/A8.11	6/A8.11	11/A8.11	NR	10	SILL 2" A.F.F.
113	JAN	3' - 0"	7' - 0"	0' - 1 3/4"	A	HM	PT	2	-	HM	PT	5/A8.11	6/A8.11	6/A8.11	11/A8.11	NR	18	SILL 2" A.F.F.
114	MEN'S ENTRY	3' - 9"	7' - 2"	0' - 2"	J	STL	PT	-	-	STL	PT	8/A7.32	7/A7.32	9/A7.32	8/A7.32	NR	11	TUBE STEEL GATE.
115	WOMEN'S ENTRY	3' - 9"	7' - 2"	0' - 2"	J	STL	PT	-	-	STL	PT	8/A7.32	7/A7.32	9/A7.32	8/A7.32	NR	11	TUBE STEEL GATE.
116	CHASE	3' - 0"	7' - 0"	0' - 1 3/4"	A	HM	PT	-	-	HM	PT	5/A8.11	6/A8.11	6/A8.11	7/A8.11	NR	12	ALUMINUM THRESHOLD
117	CHASE	3' - 0"	7' - 0"	0' - 1 3/4"	A	HM	PT	-	-	HM	PT	5/A8.11	6/A8.11	6/A8.11	7/A8.11	NR	12	ALUMINUM THRESHOLD
122	MEN'S BAG CHECK	3' - 0"	7' - 0"	0' - 1 3/4"	A	HM	PT	-	-	HM	PT	5/A8.11	6/A8.11	6/A8.11	11/A8.11	NR	13	SILL 2" A.F.F.
123	WOMEN'S BAG CHECK	3' - 0"	7' - 0"	0' - 1 3/4"	A	HM	PT	-	-	HM	PT	5/A8.11	6/A8.11	6/A8.11	11/A8.11	NR	13	SILL 2" A.F.F.
125	ELEC	3' - 0"	7' - 0"	0' - 1 3/4"	A	HM	PT	-		HM	PT	9/A8.11	10/A8.11	10/A8.11	7/A8.11	NR	14	ALUMINUM THRESHOLD
126	COMM. ROOM	3' - 0"	7' - 0"	0' - 1 3/4"	A	HM	PT	2	-	HM	PT	5/A8.11	6/A8.11	6/A8.11	11/A8.11	NR	19	ALUMINUM THRESHOLD
150A	POOL EQUIP RM	6' - 4"	7' - 2"	0' - 1 3/4"	B	HM	PT	3	-	HM	PT	9/A8.11	10/A8.11	10/A8.11	11/A8.11	NR	15	SILL 2" A.F.F., PROVIDE SWEEPER
150B	POOL EQUIP RM	6' - 4"	7' - 2"	0' - 1 3/4"	B	HM	PT	4	-	HM	PT	9/A8.11	10/A8.11	10/A8.11	11/A8.11	NR	15	SILL 2" A.F.F., PROVIDE SWEEPER
151	CHLORINE STOR	6' - 4"	7' - 0"	0' - 1 3/4"	B	HM	PT	2	-	HM	PT	9/A8.11	10/A8.11	10/A8.11	11/A8.11	NR	15	SILL 2" A.F.F., PROVIDE SWEEPER, HEIGHT OF DOOR TO BE VERIFIED IN FIELD
152	ACID STOR	6' - 4"	7' - 0"	0' - 1 3/4"	B	HM	PT	2	-	HM	PT	9/A8.11	10/A8.11	10/A8.11	11/A8.11	NR	15	SILL 2" A.F.F., PROVIDE SWEEPER, HEIGHT OF DOOR TO BE VERIFIED IN FIELD
153	STORAGE	6' - 4"	7' - 2"	0' - 1 3/4"	B	HM	PT	2	-	HM	PT	9/A8.11	10/A8.11	10/A8.11	11/A8.11	NR	15	SILL 2" A.F.F., PROVIDE SWEEPER, ONE DOOR TO RECEIVE LOUVER
200	POOL DECK	3' - 2 1/2"	8' - 0"	0' - 2"	G	STL	PT	-	-	STL	PT	8/A7.31	4/A8.11	4/A8.11	8/A7.31	NR	16	TUBE STEEL GATE W/ PERFORATED METAL SCREEN. PROVIDE PANIC HARDWARE.
201	POOL DECK	3' - 2 1/2"	8' - 0"	0' - 2"	G	STL	PT	-	-	STL	PT	8/A7.31	4/A8.11	4/A8.11	8/A7.31	NR	16	TUBE STEEL GATE W/ PERFORATED METAL SCREEN. PROVIDE PANIC HARDWARE.
202	POOL DECK	8' - 3"	10' - 0"	0' - 2"	H	STL	PT	-	-	STL	PT	-	8/A8.11	8/A8.11	8/A7.31	NR	17	TUBE STEEL SERVICE GATE.NO POST BOLT KEEPER
203	POOL DECK	3' - 2 1/2"	8' - 0"	0' - 2"	G	STL	PT	-	-	STL	PT	8/A7.31	4/A8.11	4/A8.11	8/A7.31	NR	16	TUBE STEEL GATE W/ PERFORATED METAL SCREEN. PROVIDE PANIC HARDWARE.
204	POOL DECK	3' - 3"	8' - 0"	0' - 2"	F	STL	PT	-	-	STL	PT	8/A7.31	4/A8.11	4/A8.11	8/A7.31	NR	11	TUBE STEEL GATE W/ PERFORATED METAL SCREEN. PROVIDE PANIC HARDWARE.

LEGEND

AF	ALUMINUM FRAME	HC	HOLLOW CORE	PS	PRESSED STEEL
CD	CLOSER DEVICE	HM	HOLLOW METAL	SC	SOLID CORE
DP	DOUBLE PANE	KP	KICK PLATE	SF	STAIN FINISH
FF	FICTORY FINISH	M	METAL	SP	SINGLE PANE
GL	GLASS	PF	PAINT FINSH	ST	STEEL TUBE
H	HANDLE	PH	PANIC HARDWARE	STF	STOREFRONT
T	TEMPERED GLASS				
WD	WOOD				
WS	WEATHER STRIP				

NOTES

1. **ALL SECURITY OPENINGS SHALL COMPLY WITH DIVISION 67 OF THE LOS ANGELES CURRENT BUILDING CODE INCLUDING THE FOLLOWING**
   - A. ALL PIN TYPE HINGES WHICH ARE ACCESSIBLE FROM OUTSIDE THE SECURED AREA WHEN THE DOOR IS CLOSED SHALL HAVE NON-REMOVABLE HINGE PINS.
   - B. DEADBOLTS SHALL CONTAIN HARDENED INSERTS.
   - C. STRAIGHT DEADBOLTS SHALL HAVE A MINUMUM THROW OF 1" AND AN EMBEDMENT OF 1/4".
   - D. A HOOK SHAPED OR AN EXPANDING LUG DEADBOLT SHALL HAVE A MINUMUM THROW OF 1/4".
   - E. CYLINDER GUARDS SHALL BE INSTALLED IN ALL CYLINDER LOCKS WHENEVER THE CYLINDER PROJECTS BEYOND THE FACE OF THE DOOR OR IS OTHERWISE ACCESSIBLE TO GRIPPING TOOLS.
   - F. ALL GLASS DOORS SHALL HAVE FULLY TEMPERED GLASS.
   - G. PROVIDE DEADLOCKING LATCH KEY OPERATED LOCKS ON EXTERIOR.
   - H. ALL GLAZING WITHIN 40" OF DOOR LOCK SHALL BE TEMPERED GLASS.
   - J. DOOR STOPS OF IN-SWINGING EXTERIOR DOORS SHALL BE ONE PIECE CONSTRUCTION.

BUREAU OF ENGINEERING
OFFICIAL RECORD

DOOR SCHEDULE GENERAL NOTES

1. EXIT DOORS SHALL BE CAPABLE OF OPENING WITHOUT THE USE OF A KEY OR ANY SPECIAL KNOWLEDGE OR EFFORT PER BUILDING CODE 1010.1.9
   NOTE: THIS REQUIREMENT INCLUDES LATCHING HARDWARE ON ALL GATES IN THE EXIT DISCHARGE TO THE PUBLIC WAY.
2. WIDTH AND HEIGHT OF REQUIRED EXIT DOORWAYS TO COMPLY WITH TITLE 24, 1004.6
3. MAX/ EFFORT TO OPERATE EXTERIOR AND INTERIOR DOORS SHALL NOT EXCEED 5 LBS. WITH SUCH PULL OR PUSH EFFORT BEING APPLIED AT RIGHT ANGLES TO HINGED DOORS AND AT THE CENTER PLANE OF SLIDING DOORS. PER CBC SECTION 11B-404.2.9
4. SEE DETAIL 4/G0.40 FOR DOOR CLEAR FLOOR SPACE DIAGRAMS.
5. DOORS, DOORWAYS, AND GATES PROVIDING USER PASSAGE SHALL BE PROVIDED IN ACCORDANCE WITH SECTION 11B-206.5 DOORS, DOORWAYS, AND GATES.
6. DOORS, DOORWAYS AND GATES THAT ARE PART OF AN ACCESSIBLE ROUTE SHALL COMPLY WITH SECTION 11B-404 DOOR, DOORWAYS, AND GATES.
7. DOOR OPENINGS SHALL PROVIDE A CLEAR WIDTH OF 32" MIN. CLEAR OPENINGS OF DOORWAYS AND SWINGING DOORS SHALL BE MEASURED BETWEEN THE FACE OF THE DOOR AND THE STOP, WITH THE DOOR OPEN 90 DEGREES. PROJECTIONS INTO THE CLEAR OPENING WIDTH BETWEEN 34" AND 80" ABOVE THE FINISH FLOOR OR GROUND SHALL NOT EXCEED 4" PER SECTION 11B-404.2.3
8. SWINGING DOORS AND GATES SHALL HAVE MANEUVERING CLEARANCES COMPLYING WITH TABLE 11B-404.2.4.1
9. MANEUVERING CLEARANCES FOR FORWARD APPROACH SHALL BE PROVIDED WHEN ANY OBSTRUCTION WITHIN 18" OF THE LATCH SIDE INTERIOR DOORWAY, OR WITHIN 24" OF THE LATCH SIDE OF AN EXTERIOR DOORWAY, PROJECTS MORE THAN 8" BEYOND THE FACE OF THE DOOR, MEASURED PERPENDICULAR TO THE FACE OF THE DOOR OR GATE PER SECTION 11B-4.4.2.4.3
10. THRESHOLDS, IF PROVIDED AT DOORWAYS , SHALL BE 1/2" HIGH MAX. RAISED THRESHOLDS AND CHANGES IN LEVEL AT DOORWAYS SHALL COMPLY WITH SECTION 11B-302 FLOOR OR GROUND SURFACES AND SECTION 11B-303 CHANGES IN LEVEL PER SECTION 11B-404.2.5.
11. HANDLES, PULLS, LATCHES, LOCKS AND OTHER OPERABLE PARTS ON DOORS AND GATES SHALL COMPLY WITH SECTION 11B-309.4 OPERATION. OPERABLE PARTS OF SUCH HARDWARE SHALL BE 34" MIN. AND 44" MAX. ABOVE THE FINISH FLOOR OR GROUND. PER SECTION 11B-404.2.7
    EXCEPTION: ACCESS GATES IN BARRIER WALLS AND FENCES PROTECTING POOLS, SPAS, AND HOT TUBS SHALL BE PERMITTED TO HAVE OPERABLE PARTS OF THE RELEASE OF LATCH ON SELF-LATCHING DEVICES AT 54 INCHES MAXIMUM ABOVE THE FINISH FLOOR OR GROUND PROVIDED THE SELF LATCHING DEVICES ARE NOT ALSO SELF-LATCHING DEVICES ARE NOT ALSO SELF-LOCKING DEVICES AND OPERATED BY MEANS OF A KEY, ELECTRONIC OPENER, OR INTEGRAL COMBINATION LOCK.
12. THE FORCE FOR PUSHING OR PULLING OPEN A DOOR OR GATE OTHER THAN FIRE DOORS SHAL BE 8 POUNDS MAX. FOR INTERIOR AND EXTERIOR HINGED DOORS AND GATES PER SECTION 11B-404.2.9
13. SWINGING DOOR AND GATE SURFACES WITHIN 10" OF THE FINISH FLOOR OR GROUND MEASURED VERTICALLY SHALL HAVE A SMOOTH SURFACE ON THE PUSH SIDE EXTENDING THE FULL WIDTH OF THE DOOR OR GATE. PARTS CREATING HORIZONTAL OR VERTICAL JOINTS SHALL IN THESE SURFACES SHALL BE WITHIN 1/16" OF THE SAME PLANE AS THE OTHER AND BE FREE OF SHARP OR ABRASIVE EDGES. CAVITIES CREATED BY ADDED KICKPLATES SHALL BE CAPPED PER SECTION 11B-404.2.10\
14. LATCHING AND UNLOCKING DOORS THAT ARE HAND ACTIVATED AND WHICH ARE IN A PATH OF TRAVEL, SHALL BE OPERABLE WITH A SINGLE EFFORT BY THE ABILITY TO GRASP THE OPENING HARDWARE PER BUILDING CODE.
15 HAND ACTIVATED DOOR OPENING HARDWARE SHALL BE CENTERED BETWEEN 42" AND 44" ABOVE FLOOR PER BUILDING CODE.

DOOR SIGNAGE GENERAL NOTES

SIGNS RELATED TO TOILETS AND BATHING FACILITIES (CONTINUED FROM SHEET G0.41):

1. ENTRANCES LEADING TO TOILET ROOMS AND BATHING ROOMS COMPLYING WITH 11B-603 TOILET AND BATHING ROOMS SHALL BE IDENTIFIED BY A GEOMETRIC SYMBOL COMPLYING WITH 11B-703.7.2.6
2. PICTOGRAMS SHALL COMPLY WITH THE FOLLOWING::
   - A. PICTOGRAMS SHALL HAVE A FIELD HEIGHT OF 6" MIN. CHARACTERS AND BRAILLE SHALL BE LOCATED IN THE PICTOGRAM FIELD. 11B-703.6.1
   - B. PICTOGRAMS AND THEIR FIELD SHALL HAVE A NON-GLARE FINISH. PICTOGRAMS SHALL CONTRAST WITH THEIR FIELD WITH EITHER A LIGHT PICTOGRAM ON A DARK FIELD OR A DARK PICTOGRAM ON A LIGHT FIELD 11B-703.6.2
   - C. PICTOGRAMS SHALL HAVE TEXT DESCRIPTORS LOCATED DIRECTLY BELOW THE PICTOGRAM FIELD. TEXT DESCRIPTORS SHALLL COMPLY WITH 11B-703.2 RASISED CHARACTERS, 11B-703.3.3 BRAILLE AND 11B-703.4 INSTALLATION HEIGHT AND LOCATION. 11B-703.3.6.3
   - D. THE INSTALLATION HEIGHT AND LOCATION OF PICTOGRAM SIGNS SHALL BE PER 11B-703.4.1
3. SYMBOLS SHALL COMPLY WITH THE FOLLOWING:
   - A. DOORWAYS LEADING TO TOILET ROOMS AND BATHING ROOMS SHALL BE IDENTIFIED BY A GEOMETRIC SYMBOL COMPLYING WITH 11B-703.7.2.6 TOILET AND BATHING FACILITIES GEOMETRIC SYMBOLS. THE SYMBOL SHALL BE MOUNTED AT 58" MIN. AND 60" MAX. ABOVE THE FINISH FLOOR OR GROUND SURFACE MEASURED FROM THE CENTERLINE OF THE SYMBOL. WHERE A DOOR IS PROVIDED THE SYMBOL SHALL BE MOUNTED WITHIN 1" OF THE VERTICAL CENTERLINE OF THE DOOR 11B-703.7.2.6 (SEE EXCEPTION)
   - B. MEN'S TOILET AND BATHING FACILITIES SHALL BE IDENTIFIED BY AN EQUILATERAL TRIANGLE, 1/4" THICK WITH EDGES 12" LONG AND VERTEX POINTING UPWARD. THE TRIANGLE SYMBOL SHALL CONTRAST WITH THE DOOR, EITHER LIGHT ON DARK BACKGROUND OR DARK ON A LIGHT BACKGROUND. 11B-703.7.2.1.6.1
   - C. WOMEN'S TOILET AND BATHING FACILITIES SHALL BE IDENTIFIED BY A CIRCLE, 1/4" THICK AND 12" IN DIAMETER. THE CIRCLE SYMBOL SHALL CONTRAST WITH THE DOOR, EITHER LIGHT ON DARK BACKGROUND OR DARK ON A LIGHT BACKGROUND 11B-703.7.2.6.2
   - D. UNISEX TOILET AND BATHING FACILITIES SHALL BE IDENTIFIED BY A CIRCLE, 1/4" THICK AND 12" IN DIAMETER WITH A 1/4" THICK TRIANGLE WITH A VERTEX PONTING UPWARD SUPERIMPOSED ON THE CIRCLE AND WITHIN THE 12" DIAMETER. THE TRIANGLE SYMBOL SHALL CONTRAST WITH THE CIRCLE SYMBOL, EITHER LIGHT ON DARK BACKGROUNS OR DARK ON LIGHT BACKGROUND. THE CIRCLE SYMBOL SHALL CONTRAST WITH THE DOOR, EITHER LIGHT ON DARK BACKGROUND OR DARK ON LIGHT BACKGROUND 11B-703..2.6.3

THE CITY OF LOS ANGELES OR ITS OFFICERS OR AGENTS SHALL NOT BE RESPONSIBLE FOR THE ACCURACY OR COMPLETENESS OF ELECTRONIC COPIES OF THIS PLAN SHEET.

TTLB TEMPLATE REVISION DATE: 02/2013
SHEET ISSUE DATE: 01/04/18
FILE PATH: BIM 360://Granada Hills Pool Renovation/A_Granada-Hills_2017.rvt

REVISION DATES (DESIGN STAGE ONLY)

BUREAU OF ENGINEERING
CITY OF LOS ANGELES

DEPARTMENT OF PUBLIC WORKS
BUREAU OF ENGINEERING

NO.	REVISION DESCRIPTION	DATE	BY

BUILDING NO. -

INDEX NO. RP-300118

ENGINEER, ARCHITECT, JOHN P. SPARANO, No. C-26244, LIC. EXP. 1-30-21, STATE OF CALIFORNIA

CITY ENGINEER	DATE:
P	03/03/20
4	03/03/20
	03/03/20
	03/03/20
	03/03/20

GARY LEE MOORE, PE, ENV SP
ARCHITECTURAL DIVISION

ARCHITECT/ENGINEER: JOHN SPARANO LIC. NO.: C-26244
DESIGNED BY: SPARANO + MOONEY ARCHITECTURE
DRAWN BY: JORGE BELTRAN
CHECKED BY: LUDWING JUAREZ
APPROVED BY:

BID SET
PROJECT ISSUE DATE: 06/22/21.
CITY OF LOS ANGELES

VERTICAL CONTROL:
HORIZONTAL CONTROL:

SHEET TITLE: DOOR SCHEDULE

PROJECT: GRANADA HILLS POOL AND BATHHOUSE REPLACEMENT PROJECT

ADDRESS: 16730 CHATSWORTH STREET GRANADA HILLS, CA 91344

WORK ORDER NO. #E170517
PLAN FILE NO. #308
DRAWING NO. A8.10
SHEET OF SHEETS

PLOTTED:7/12/2021 11:40:03 AM

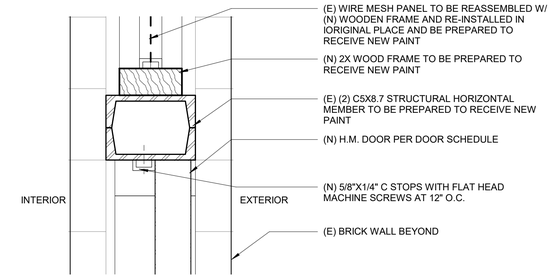

13 FRONT DOOR HEAD
3" = 1'-0"

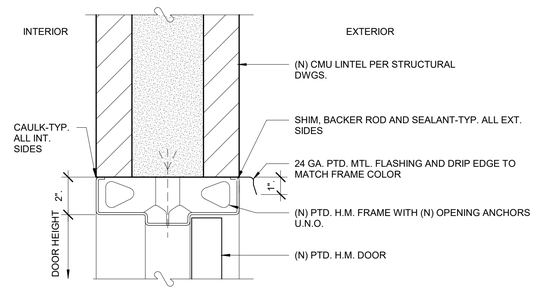

9 HEAD DETAIL CMU
3" = 1'-0"

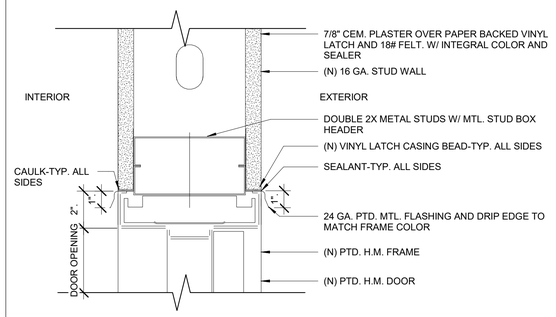

5 DOOR HEAD DETAIL
3" = 1'-0"

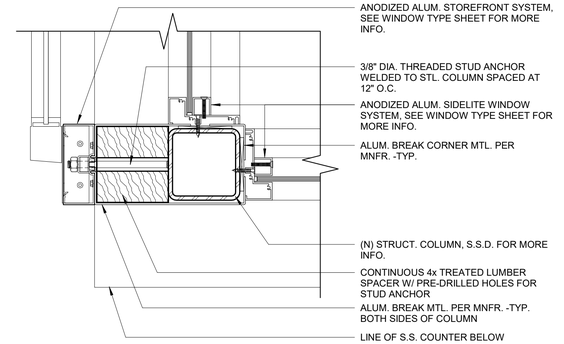

1 Detail 14
3" = 1'-0"

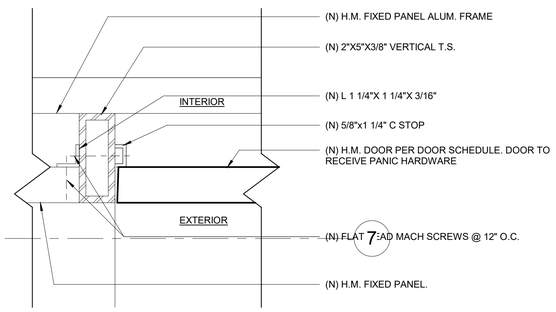

14 FRONT DOOR JAMB HINGE
3" = 1'-0"

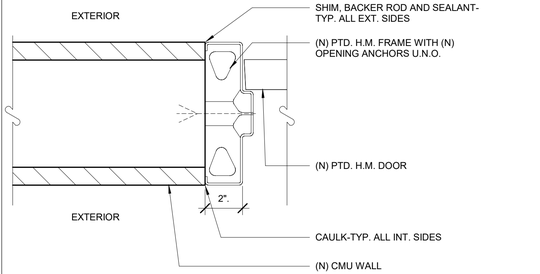

10 JAMB DETAIL CMU
3" = 1'-0"

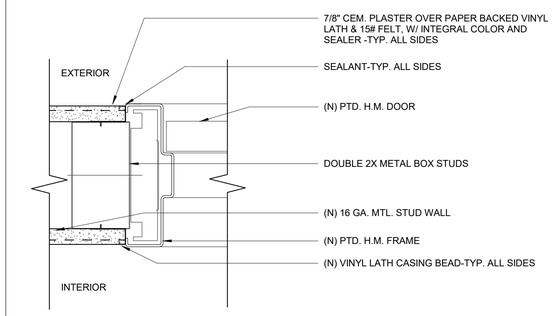

6 DOOR HAMB DETAIL
3" = 1'-0"

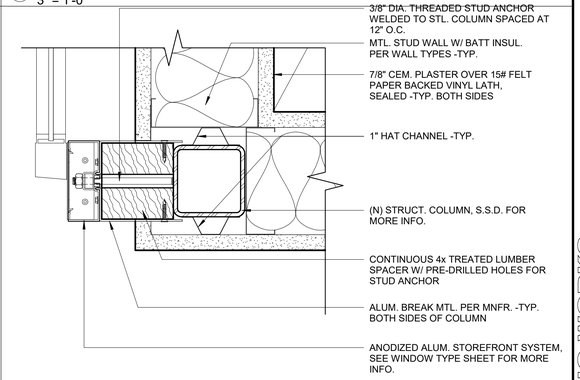

2 Detail 3
3" = 1'-0"

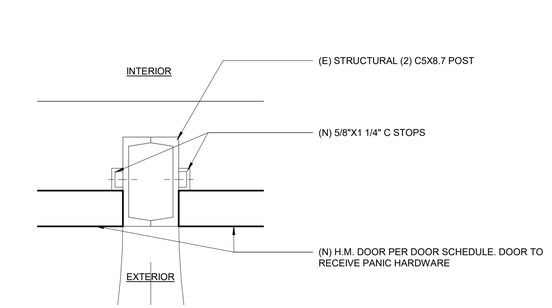

15 FRONT DOOR JAMB
3" = 1'-0"

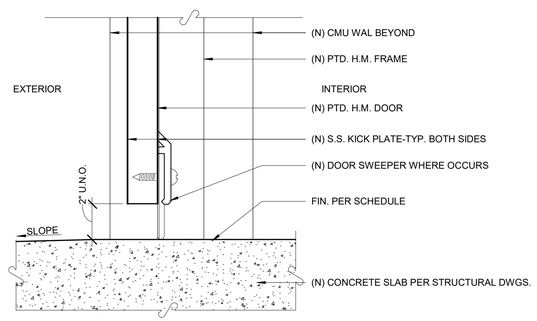

11 SILL DETAIL
3" = 1'-0"

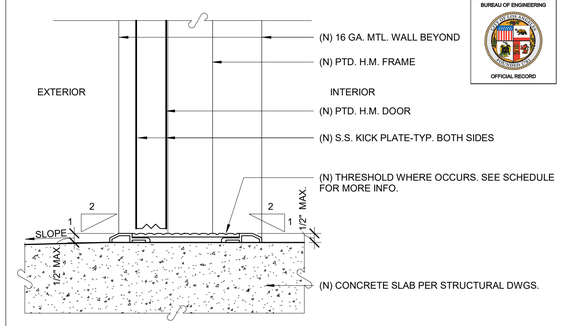

7 SILL DETAIL THRESHOLD
3" = 1'-0"

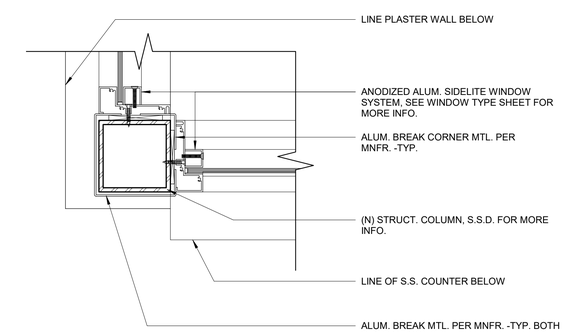

3 Detail 13
3" = 1'-0"

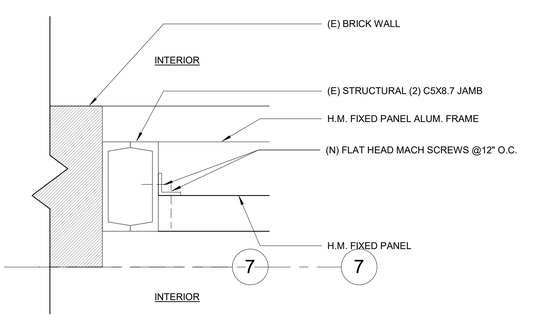

16 FRONT DOOR PANEL JAMB
3" = 1'-0"

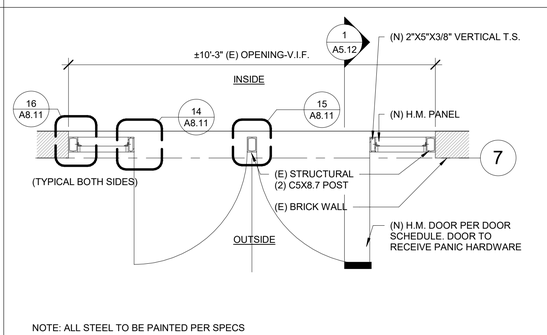

NOTE: ALL STEEL TO BE PAINTED PER SPECS

12 FRONT DOOR DETAIL
1/2" = 1'-0"

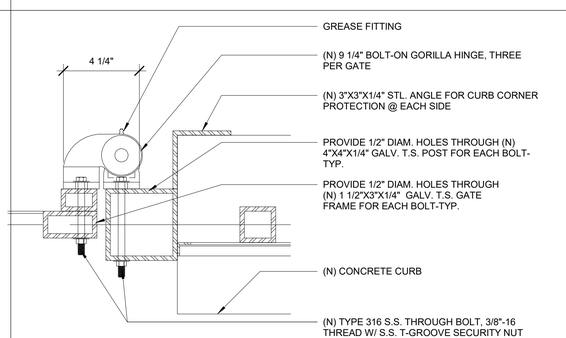

8 SERVICE GATE JAMB
3" = 1'-0"

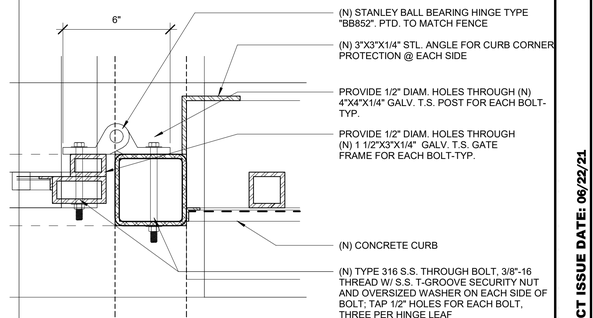

4 MAN GATE JAMB
3" = 1'-0"

THE CITY OF LOS ANGELES OR ITS OFFICERS OR AGENTS SHALL NOT BE RESPONSIBLE FOR THE ACCURACY OR COMPLETENESS OF ELECTRONIC COPIES OF THIS PLAN SHEET.

TTLB TEMPLATE REVISION DATE: 02/2013
SHEET ISSUE DATE: 02/20/09
FILE PATH: BIM 360://Granada Hills Pool Renovation/A_Granada-Hills_2017.rvt

REVISION DATES (DESIGN STAGE ONLY)

BUREAU OF ENGINEERING
CITY OF LOS ANGELES

NO.	REVISION DESCRIPTION	DATE	BY

BUILDING NO. -
INDEX NO. RP-300118

ENGINEER, ARCHITECT, GARY L. P. SPARANO, No. C-26244, REG. 1-30-21, STATE OF CALIFORNIA

DEPARTMENT OF PUBLIC WORKS
CITY OF LOS ANGELES

GARY LEE MOORE, PE, ENV SP
CITY ENGINEER

		DATE:
ARCHITECTURAL DIVISION		
ARCHITECT/ENGINEER:	JOHN SPARANO	LIC. NO.: C-26244
DESIGNED BY:	SPARANO + MOONEY ARCHITECTURE	03/03/20
DRAWN BY:	JORGE BELTRAN	03/03/20
CHECKED BY:	LUDWING JUAREZ	03/03/20
APPROVED BY:		03/03/20

VERTICAL CONTROL:
HORIZONTAL CONTROL:

SHEET TITLE: DOOR AND WINDOW DETAILS

PROJECT: GRANADA HILLS POOL AND BATHHOUSE REPLACEMENT PROJECT

ADDRESS: 16730 CHATSWORTH STREET GRANADA HILLS, CA 91344

BID SET
PROJECT ISSUE DATE: 06/22/21

WORK ORDER NO. #E170517
PLAN FILE NO. #308
DRAWING NO. A8.11
SHEET 0 OF SHEETS

PLOTTED:8/18/2020 1:24:21 PM

NOTES

1. VERIFY ALL DIMENSIONS AT FIELD BEFORE MANUFACTURING
2. PROVIDE SNAP-ON MULLION EXTENSION AT STOREFRONT WINDOW ONLY (HORIZONTAL)
3. EACH PANE OF SAFETY GLAZING INSTALLED IN HAZARDOUS LOCATIONS SHALL BE IDENTIFIED BY A MANUFACTURER'S DESIGNATION SPECIFYING WHO APPLIED THE DESIGNATION, THE MANUFACTURER OR INSTALLER AND THE SAFETY GLAZING STANDARD. (SECTION 2406)

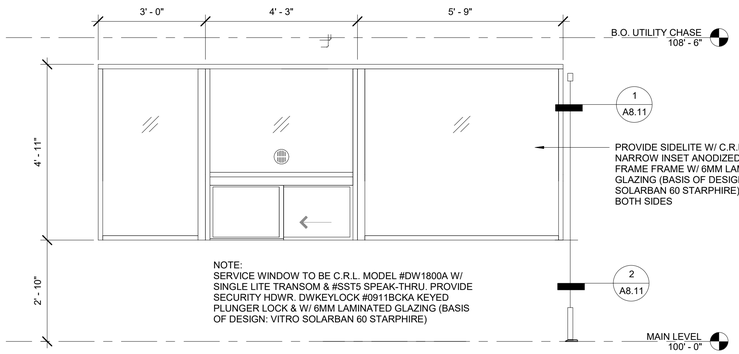

3 WINDOW TYPE C
1/2" = 1'-0"

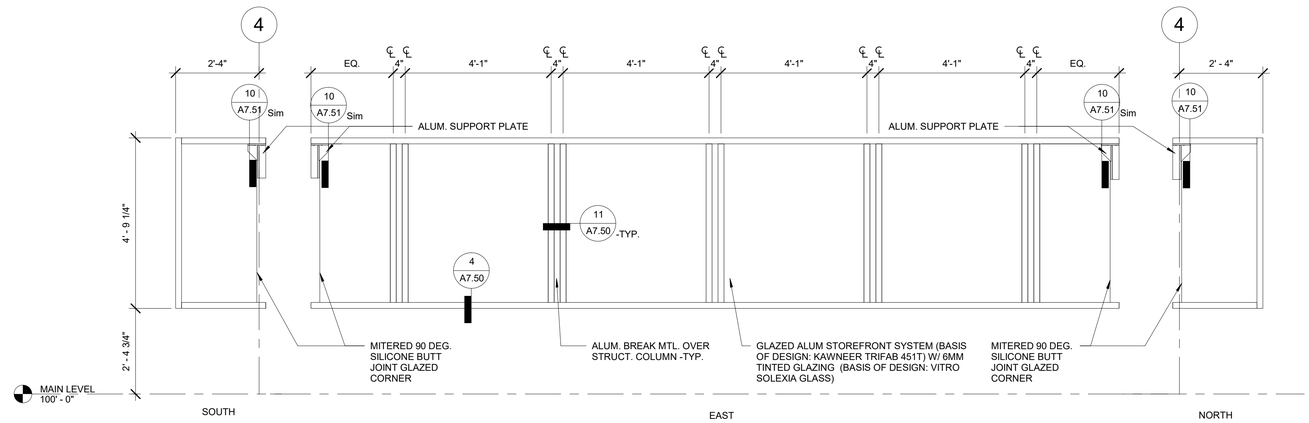

NOTE:
GLAZED ALUM. STOREFRONT SYSTEM TO RECEIVE CONTINUOUS ALUM. TUBE FRAME SECURITY PANEL W/ 1/8" PERFORATED ALUM. PANEL RIVETED TO TUBE FRAME

1 WINDOW TYPE A
1/2" = 1'-0"

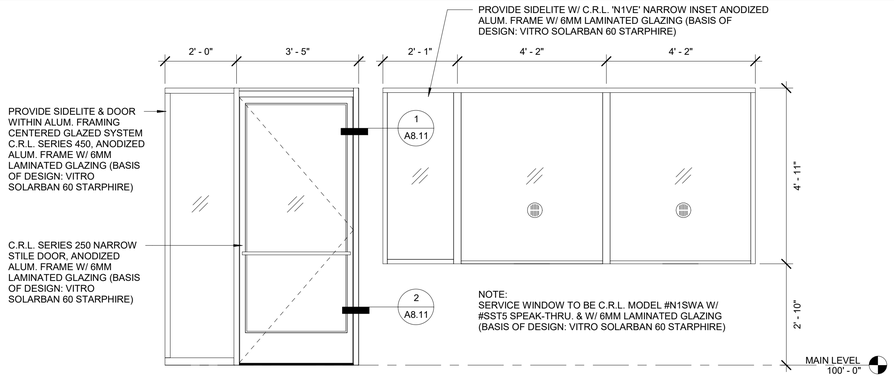

4 WINDOW TYPE B & ENTRY
1/2" = 1'-0"

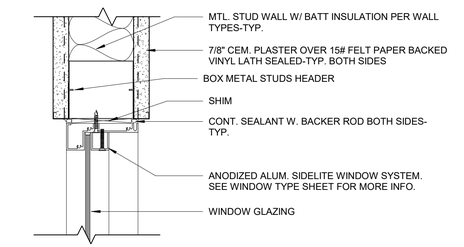

2 WINDOW HEAD DETAIL
3" = 1'-0"

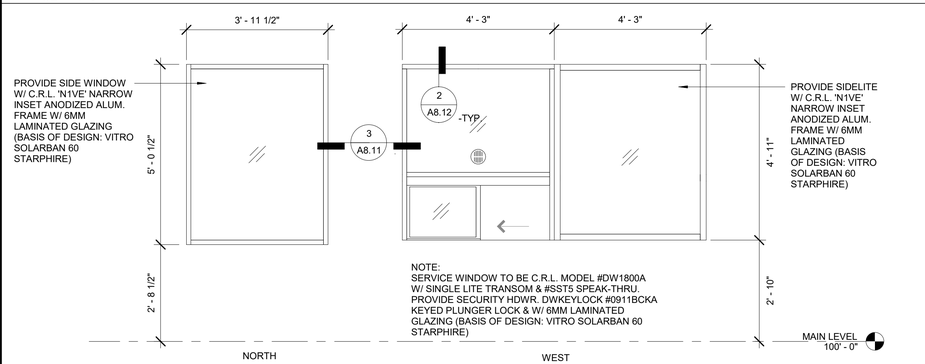

5 WINDOW TYPE D
1/2" = 1'-0"

THE CITY OF LOS ANGELES OR ITS OFFICERS OR AGENTS SHALL NOT BE RESPONSIBLE FOR THE ACCURACY OR COMPLETENESS OF ELECTRONIC COPIES OF THIS PLAN SHEET.

FILE PATH: BIM 360://Granada Hills Pool Renovation/A_Granada-Hills_2017.rvt

TTLB TEMPLATE REVISION DATE: 02/2013
SHEET ISSUE DATE: 11/09/18

REVISION DATES (DESIGN STAGE ONLY)

BUREAU OF ENGINEERING
DEPARTMENT OF PUBLIC WORKS
CITY OF LOS ANGELES

ENGINEERING
CITY OF LOS ANGELES

NO.	REVISION DESCRIPTION	DATE	BY

BUILDING NO. -

INDEX NO. RP-300118

DISTRICT ENGINEER
P. SPARANO
C-26244
6-30-21
STATE OF CALIFORNIA

BID SET
PROJECT ISSUE DATE: 06/22/21

CITY ENGINEER

	DATE:
	03/03/20
	03/03/20
	03/03/20
	03/03/20
	03/03/20

GARY LEE MOORE, PE, ENV SP
ARCHITECTURAL DIVISION

ARCHITECT/ENGINEER: JOHN SPARANO LIC. NO.: C-26244
DESIGNED BY: SPARANO + MOONEY ARCHITECTURE
DRAWN BY: JORGE BELTRAN
CHECKED BY: LUDWING JUAREZ
APPROVED BY: JOHN SPARANO

VERTICAL CONTROL:
HORIZONTAL CONTROL:

SHEET TITLE: WINDOW TYPES

PROJECT: GRANADA HILLS POOL AND BATHHOUSE REPLACEMENT PROJECT

ADDRESS: 16730 CHATSWORTH STREET GRANADA HILLS, CA 91344

BUREAU OF ENGINEERING
OFFICIAL RECORD

WORK ORDER NO. #E170517

PLAN FILE NO.

DRAWING NO. A8.12

SHEET 0 OF SHEETS

PLOTTED:8/18/2020 1:24:26 PM

ROOM FINISH SCHEDULE

NO.	ROOM NAME	FLOOR		WALLS				CEILING	REMARKS
		BASE	FINISH	NORTH	EAST	SOUTH	WEST		
100	LOBBY/ENTRY	CB-01/BR-01	SC-01	BR-01/CP-01	CP-01	BR-01/CP-01	BR-01	EXP - PT-01	
101	HALL	CB-01	SC-01	CP-01	-	CP-01	WM-01	EXP - PT-01	
102	MEN'S VESTIBULE	CB-01/BR-01	SC-01	CP-01	CP-01	CP-01	BR-01	EXP - PT-01	
103	WOMEN'S VESTIBULE	CB-01/BR-01	SC-01	CP-01	CP-01	CP-01	BR-01	EXP - PT-01	
104	STAFF RR	CB-01	SC-01	CT-01/CP-01	CT-01	CT-01/CP-01	CP-01	PT-01	
105	CHECK-IN	CB-01	SC-01	CP-01	BR-01	CP-01	WM-01	ACT-01	
106	FIRST AID	CB-01/BR-01	SC-01	-	BR-01	BR-01	CP-01	ACT-01	
107	LIFEGUARD	CB-01/BR-01	SC-01	CP-01	CP-01	CP-01	BR-01	ACT-01	
108	FAM/UNISEX	CB-01	SC-01	CT-01/CP-01	CT-01/CP-01	CT-01/CP-01	CT-01/CP-01	PT-01	
109	FAM/UNISEX	CB-01	SC-01	CT-01/CP-01	CT-01/CP-01	CT-01/CP-01	CT-01/CP-01	PT-01	
110	MEN'S CHANGING	CB-01/BR-01	SC-01	BR-01	CP-01	CP-01	BR-01	EXP - PT-01	
111	WOMEN'S CHANGING	CB-01/BR-01	SC-01	CP-01	CP-01	BR-01	BR-01	EXP - PT-01	
112	JAN	CB-01/BR-01	SC-01	BR-01	CP-01	BR-01	BR-01	EXP - PT-01	
113	JAN	CB-01/BR-01	SC-01	CP-01	CP-01	BR-01	BR-01	EXP - PT-01	
114	MEN'S ENTRY	CB-01/BR-01	SC-01	CP-01	BR-01	BR-01	CP-01	EXP - PT-01	
115	WOMEN'S ENTRY	CB-01/BR-01	SC-01	BR-01	BR-01	CP-01	CP-01	EXP - PT-01	
116	CHASE	CB-01	SC-01	-	-	-	-	EXP - PT-01	EXPOSED STUDS AT WALLS
117	CHASE	CB-01	SC-01	-	-	-	-	EXP - PT-01	EXPOSED STUDS AT WALLS
118	MEN'S SHWR	CT-01	SC-01/CT-02	CT-02	CT-02	CT-02	-	EXP - PT-01	
119	WOMEN'S SHOWER	CT-01	SC-01/CT-02	CT-02	CT-02	CT-02	-	EXP - PT-01	
120	MEN'S RR	CB-01/BR-01	SC-01	BR-01	CP-01	CT-01/CP-01	CT-01/CP-01	EXP - PT-01	
121	WOMEN'S RR	CB-01/BR-01	SC-01	CT-01/CP-01	CP-01	BR-01	CT-01/CP-01	EXP - PT-01	
122	BAG CHECK	CB-01	SC-01	CP-01	CP-01	CP-01	CP-01	ACT-01	CABS OVER EXPOSED BRICK, CP-01 SOFFIT ABOVE
123	BAG CHECK	CB-01	SC-01	CP-01	CP-01	CP-01	CP-01	ACT-01	CABS OVER EXPOSED BRICK, CP-01 SOFFIT ABOVE
125	ELEC	CB-01/BR-01	SC-01	CP-01	CP-01	CP-01	CP-01	EXP - PT-01	
126	COMM	CB-01/BR-01	SC-01	BL-01	BL-01	CP-01	CP-01	EXP - PT-01	
150	POOL EQUIPMENT RM	BL-01	SC-01	BL-01	BL-01	BL-01	BL-01	EXP - PT-01	
151	CHLORINE RM	BL-01	SC-01/PT-05	PT-05	PT-05	PT-05	PT-05	EXP - PT-01	
152	ACID STOR	BL-01	SC-01/PT-05	PT-05	PT-05	PT-05	PT-05	EXP - PT-01	
153	STORAGE	BL-01	SC-01	BL-01	BL-01	BL-01	BL-01	EXP - PT-01	
200	POOL DECK	-	SC-01	-	-	-	-	-	

ROOM FINISH GENERAL NOTES

1. THE CONTRACTOR SHALL SUBMIT ALL FINISH COLOR SAMPLES FOR REVIEW AND APPROVAL BY THE ARCHITECT PRIOR TO INSTALLATION.
2. PAINT ALL EXPOSED STRUCTURAL BEAMS, DECKS, A/C DUCTS, PIPES, ELECTRICAL CONDUITS AND COMPONENTS ETCETERA WITH COLOR __, PAINT ALL EXPOSED STRUCTURAL COLUMNS AND BRACES WITH COLOR __ UNLESS NOTED OTHERWISE, AND PAINT ALL AIR DIFFUSERS AND CEILING ACCESS DOORS TO MATCH WITH ADJACENT SURFACES, TYPICAL FOR ALL INTERIOR OF THE BUILDING.
3. ALL INTERIOR FINISH MATERIALS APPLIED TO WALLS AND CEILINGS SHALL BE TESTED AS SPECIFIED IN SECTION 802 OF THE LOS ANGELES BUILDING CODE, FOR EXITWAYS, HALLWAYS AND CORRIDORS MUST HAVE MAXIMUM FLAME SPREAD OF CLASS-II, ALL OTHER ROOMS MUST HAVE MAXIMUM FLAME SPREAD OF CLASS-III.
4. EXTEND PLYWOOD SHEETING TO THE ENTIRE WALL WHERE SHEAR WALL PLYWOOD EXISTS IN ORDER TO HAVE AN EVEN WALL SURFACE.
5. REFERENCE POINT FOR WALL AND FLOOR TILE INSTALLATION SHALL START FROM THE CENTER OF THE FLOOR OR WALL SURFACE.
6. PROVIDE RECESSED VALVE OUTLETS FOR REFRIGERATOR AND UTILITY LINES.
7. ALL BUILDING SURFACES ARE TO BE FREED OF ANY (E) GRAFFITI AND PREPPED TO RECEIVE (N) FINISH.
8. ALL (E) BRICK WALLS ARE TO BE FREED OF ALL (E) CALCIFICATION AND PREPPED TO RECEIVE (N) FINISH.
9. ALLL (E) WALLS AND CEILING TO REMAIN ARE TO BE SANDBLASTED AND SEALED, SEE SPECS.
10. NEW FLOOR SLAB TO RECEIVE ACRYLIC COLOR SEALERR U.N.O. COLORS TO BE CHOSEN BY OWNER.
11. ALL FLOOR AND WALL TILES IN SHOWERS AND RESTROOMS MUST BE NON-GLAZED.
12. ALL FLOOR AND WALL SURFACES IN SHOWERS AND RESTROOMS MUST HAVE A COEFFICIENT OF FRICTION OF .6 OR GREATER.
13. ALL RESTROOM FLOORS TO BE HARD, NON-ABSORBENT, SLIP RESISTANT, COVED AT LEAST 5" AND SLOPED ONE-QUARTER INCHES PER FOOT TO FLOOR DRAINS.

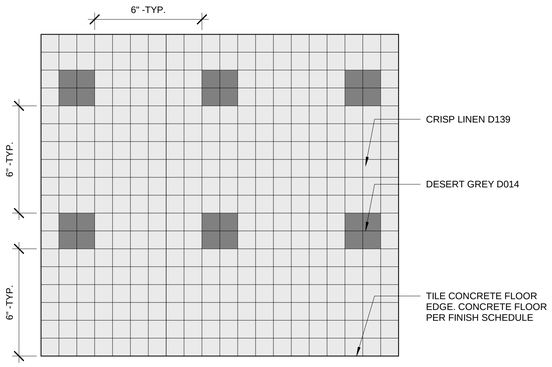

FLOOR TILE PATTERN

NOTE:
ALL DOORS, TRIMS, GATES, PERIMETER FENCING, TRELLIS, AND STRUCTURE FOR FUTURE PHOTOVOLTAICPANELS TO BE PTD. PT-03

FINISH LEGEND

CERAMIC/PORCELAIN AND QUARRY TILE

CT-01
MFR: DALTILE
SERIES: KEYSTONE
SIZE: 1"X1"
COLOR: CRISP LINEN D139 & DESERT GRAY D014 IN CUSTOM PATTERN.
GROUT: SUBMIT FULL COLOR RANGE SAMPLES FOR SELECTION.
INSTALLATION: SEE PATTERN DETAIL.
NOTES: PROVIDE COVE TILE AT WALL BASE

CT-02
MFR: DALTILE
SERIES: KEYSTONE
SIZE: 1"X1"
COLOR: CINNAMON RANGE D007
GROUT: SUBMIT FULL COLOR RANGE SAMPLES FOR SELECTION.
INSTALLATION: SEE PATTERN DETAIL.

SUSPENDED GRID ACOUSTICAL CEILING

ACT-01
MFR: USG
SERIES: RADAR CLIMAPLUS PERFORMANCE
ITEM NO: 2227
SIZE: 24"X24"
COLOR: WHITE
EDGE: SLT
GRID: C USG DX/DXL, WHITE

INTERIOR PORTLAND CEMENT PLASTER

CP-01
MFR: MERLEX
PRODUCT: SUPER SHOWER FINISH
SEALER: MERSEAL II
COLOR: WHITE
FINISH: SMOOTH STEEL TROWEL

CONCRETE FINISHES

SC-01
MEDIUM BROOM FINISH
SEALED CONCRETE
PROVIDE HARDENER PER SPECIFICATIONS

CB-01
CONCRETE BASE
SEE SLAB AND CURB CONTROL PLAN
AT EXISTING BRICK, POUR NEW CONCRETE BASE AGAINST WALL

MASONRY FINISHES

BL-01
MFR: ANGELUS
PRODUCT: MEDIUM WEIGHT BURNISHED BLOCK
SIZE: 8X8X16
GROUT: TYPE S - NATURAL GRAY
JOINT INTERIOR: FLUSH STRUCK
COLOR: SAGE
SEALER: PER SPEC.

BR-01
EXPOSED EXISTING BRICK
CLEAN W/ EFFLORESCENCE REMOVER
APPLY SEALER PER SPEC.

METAL FINISHES

SS-01
TYPE 316 STAINLESS STEEL
FINISH: NO. 4
GAUGE: 16

WM-01
MFR: MCNICHOLS
MATERIAL: TYPE 316 STAINLESS STEEL
OPENING: 2" SQUARE
WIRE DIA: 0.1200"

PM-01
MFR: MCNICHOLS
MATERIAL: TYPE 304 STAINLESS STEEL
GAUGE: 11
HOLE: 1/8" HOLES ON 1/4" MARGIN
PATTERN: STAGGERED

PAINT

***PREP ALL SUBSTRATES PER PAINT SCHEDULE, REF SPECS
***APPLY COATS PER PAINT SCHEDULE, REF SPECS

PT-01
MFR: DUNN EDWARDS
FINISH: FLAT/MATTE
COLOR: THICKET DE 5622

PT-02
MFR: DUNN EDWARDS
FINISH: FLAT/MATTE
COLOR: WHITE DEW 380

PT-03
MFR: DUNN EDWARDS
FINISH: FLAT/MATTE
COLOR: WILD THYME DE 5621

PT-04
MFR: DUNN EDWARDS
FINISH: FLAT/MATTE
COLOR: BURNT CEDAR DE966

PT-05
MFR: SHERWIN WILLIAMS
FINISH: SEMI-GLOSS
COLOR: HAZE GRAY
SYSTEM: 1 COAT COROBOND 100 EPOXY PRIMER/SEALER @ 6.0 MILS DFT
1 COAT STEEL-SEAM FT910 AS REQ. FOR FILLING VOIDS & BUGHOLES ON CONC.
1 COAT SHER-TUFF FLEXIBLE EPOXY @ 30.0 MILS DFT
1 COAT COR-COTE HCR (CLEAR) W/ 1 OZ GLASS MAT @ 30.0 MILS DFT (WITH GLASS MAT)
2 COATS COR-COTE HCR FF FLAKE FILLED EPOXY @ 20.0 MILS DFT/CT

ROOFING FINISHES

RF-01
MFR: OWENS CORNING
PRODUCT: TRUDEFINITION DURATION COOL SHINGLES
COLOR: SAND CASTLE

RF-02
MFR: OWENS CORNING
PRODUCT: TRUDEFINITION DURATION COOL SHINGLES
COLOR: SHASTA WHITE

PARTITIONS

SP-01
MFR: BOBRICK
PRODUCT: SOLID PHENOLIC 1080
COLOR: LIMOUSINE GREYS-542-CA

CASEWORK

SP-01
MFR: BOBRICK
PRODUCT: SOLID PHENOLIC 1080
COLOR: LIMOUSINE GREYS-542-CA

BUREAU OF ENGINEERING
OFFICIAL RECORD

ENGINEERING
CITY OF LOS ANGELES

BUILDING NO. -

INDEX NO. RP-300118

NO.	REVISION DESCRIPTION	DATE	BY

ENGINEER, ARCHITECT
JOHN P. SPARANO
No. C-26244
EXP. 4-30-21
STATE OF CALIFORNIA

DEPARTMENT OF ENGINEERING
BUREAU OF ENGINEERING
PUBLIC WORKS
CITY OF LOS ANGELES

GARY LEE MOORE, PE, ENV SP
CITY ENGINEER

ARCHITECTURAL DIVISION	DATE:
ARCHITECT/ENGINEER: JOHN SPARANO	LIC. NO.: C-26244
DESIGNED BY: SPARANO + MOONEY ARCHITECTURE	03/03/20
DRAWN BY: JORGE BELTRAN	03/03/20
CHECKED BY: LUDWING JUAREZ	03/03/20
APPROVED BY:	03/03/20

VERTICAL CONTROL:
HORIZONTAL CONTROL:

SHEET TITLE: FINISH SCHEDULE

PROJECT: GRANADA HILLS POOL AND BATHHOUSE REPLACEMENT PROJECT

ADDRESS: 16730 CHATSWORTH STREET GRANADA HILLS, CA 91344

BID SET
PROJECT ISSUE DATE: **06/22/21**

WORK ORDER NO. #E170517
PLAN FILE NO. #308
DRAWING NO. A8.50
SHEET ___ OF ___ SHEETS

PLOTTED:7/29/2021 4:31:14 PM

THE CITY OF LOS ANGELES OR ITS OFFICERS OR AGENTS SHALL NOT BE RESPONSIBLE FOR THE ACCURACY OR COMPLETENESS OF ELECTRONIC COPIES OF THIS PLAN SHEET.

TTLB TEMPLATE REVISION DATE: 02/2013
SHEET ISSUE DATE: 02/10/10
FILE PATH: BIM 360://Granada Hills Pool Renovation/A_Granada-Hills_2017.rvt

REVISION DATES (DESIGN STAGE ONLY)

GENERAL NOTES:

1. DETAILS OF CONSTRUCTION NOT SHOWN SHALL BE OF SAME NATURE AS THOSE SHOWN FOR SIMILAR CONDITIONS. REFER TO THE TYPICAL DETAIL SHEETS FOR TYPICAL DETAILS OF CONSTRUCTION. TYPICAL DETAILS APPLY TO ALL CONSTRUCTION UNLESS SPECIFICALLY NOTED OR SHOWN OTHERWISE. WHERE CONDITIONS RE□UIRE MODIFICATIONS OF A TYPICAL DETAIL, THE CONTRACTOR SHALL SUBMIT MODIFIED DETAIL FOR APPROVAL BY THE ENGINEER OF RECORD PRIOR TO FABRICATION AND INSTALLATION. DETAILS OF CONSTRUCTION NOT SHOWN SHALL BE OF SAME NATURE AS THOSE SHOWN FOR SIMILAR CONSTRUCTION.

2. CONTRACTOR SHALL CONSIDER THE PROJECT SPECIFICATIONS A PART OF THE CONTRACT DOCUMENTS. WHERE INFORMATION IS CONFLICTING, SPECIFIC DETAILS SHALL GOVERN OVER TYPICAL DETAILS WHICH SHALL GOVERN OVER THESE NOTES WHICH SHALL GOVERN OVER SPECIFICATIONS.

3. ALL DIMENSIONS ON STRUCTURAL DRAWINGS SHALL BE CHECKED AGAINST ARCHITECTURAL DIMENSIONS. DO NOT SCALE DRAWINGS. IF DIMENSIONS ARE OMITTED OR NOT CLEAR, CONTACT THE ARCHITECT (ARCH) OR STRUCTURAL ENGINEER OF RECORD (SEOR). ALL DIMENSIONS RELATED TO EXISTING CONDITIONS SHALL BE FIELD VERIFIED BY THE CONTRACTOR. DIMENSIONS ARE TO THE FACE OF STUDS, AND TO CENTERLINE OF COLUMNS UNO.

4. IT IS THE CONTRACTOR'S RESPONSIBILITY TO IMMEDIATELY NOTIFY THE SEOR OF ANY CONFLICTS BETWEEN THE STRUCTURAL DRAWINGS AND OTHER DRAWINGS□OR EXISTING CONDITIONS NOT SHOWN OR DIFFERENT FROM THOSE SHOWN ON DRAWINGS PRIOR TO COMMENCEMENT OF WORK. THE CONTRACTOR IS NOT TO ORDER MATERIAL OR CONSTRUCT ANY PORTION OF THE BUILDING THAT IS IN CONFLICT UNTIL THE CONFLICT IS RESOLVED WITH THE AFFECTED PARTIES.

5. THE STRUCTURAL DRAWINGS AND SPECIFICATIONS REPRESENT THE FINISHED STRUCTURE. UNLESS OTHERWISE SHOWN THEY DO NOT INDICATE METHOD OF CONSTRUCTION. THE CONTRACTOR SHALL PROVIDE ALL MEASURES NECESSARY TO PROTECT THE CONSTRUCTION AND ALL ADJACENT PROPERTIES DURING CONSTRUCTION. SUCH MEASURES SHALL INCLUDE BUT ARE NOT LIMITED TO BRACING, SHORING OF LOADS DUE TO CONSTRUCTION E□UIPMENT, ETC. OBSERVATION VISITS TO THE SITE BY THE ARCHITECT OR SEOR SHALL NOT INCLUDE OBSERVATION OF THE ABOVE ITEMS.

6. SUBSTITUTION RE□UESTS FOR MATERIALS SPECIFIED ON THE STRUCTURAL DRAWINGS MAY BE CONSIDERED WITH MATERIALS HAVING E□UIVALENT OR GREATER CAPACITY AND PERFORMANCE. CURRENT EVALUATION REPORTS AND PRODUCT INFORMATION SHALL BE PROVIDED TO THE STRUCTURAL ENGINEER DEMONSTRATING THE RE□UIRED CAPACITY AND PERFORMANCE OF THE MATERIAL TO BE SUBSTITUTED. WRITTEN APPROVAL FROM THE SEOR SHALL BE OBTAINED PRIOR TO THE SUBSTITUTION OF ANY MATERIAL SPECIFIED ON THE STRUCTURAL DOCUMENTS.

7. IT IS THE CONTRACTOR'S RESPONSIBILITY TO COMPLY WITH THE PERTINENT SECTIONS OF THE "CONSTRUCTION SAFETY ORDERS" ISSUED BY THE STATE OF CALIFORNIA, LATEST EDITION, AND ALL OSHA RE□UIREMENTS AS THEY APPLY TO THIS PROJECT. THE ARCHITECT, SEOR, AND THE OWNER DO NOT ACCEPT ANY RESPONSIBILITY FOR THE CONTRACTOR'S FAILURE TO COMPLY WITH THESE RE□UIREMENTS.

8. ALL WORK IS NEW (N) UNLESS INDICATED AS EXISTING (E).

9. CONSTRUCTION MATERIALS SHALL BE DISTRIBUTED WHEN PLACED ON THE STRUCTURE SUCH THAT LOADS DO NOT EXCEED DESIGN LIVE LOADS OR RESULT IN AN UNBALANCED CONDITION.

10. REFER TO THE PROJECT SPECIFICATIONS FOR SHOP DRAWING RE□UIREMENTS AND SUBMITTALS.

11. CORE DRILLS RE□UIRED SHALL NOT CUT ANY REINFORCING. THE CONTRACTOR IS TO COORDINATE WORK OF ALL TRADES TO ENSURE COMPLIANCE. ALL CORE DRILLS ARE TO BE PRESENTED TO THE IOR FOR VERIFICATION. THE IOR IS TO DOCUMENT CORES EXAMINED INDICATING AN ABSENCE OF REINFORCING.

STRUCTURAL DESIGN CRITERIA:

1. CODES:
   ALL WORK SHALL BE IN CONFORMANCE WITH THE CALIFORNIA BUILDING CODE (CBC) 2016 EDITION, INCLUDING ALL AMENDMENTS. ALL STANDARDS USED SHALL BE THE LATEST VERSION APPROVED BY THE CODE ENFORCEMENT AGENCY ON THE DATE OF THE PERMIT ISSUANCE UNLESS SPECIFICALLY NOTED OTHERWISE.

2. DESIGN LIVE LOADS:

DEAD LOADS (UNREDUCIBLE, UNO):		
a. ROOF		
BUILDING ROOF		20 PSF
CANOPY		15 PSF
LIVE LOADS (UNREDUCIBLE, UNO):		
a. ROOF		
BUILDING ROOF		20 PSF
CANOPY		20 PSF

3. WIND DESIGN INFORMATION:

I □ 1.0	OCCUPANCY CAT. II	K_{zt} □ 0.85	K_d □ 0.85	K_1 □ 1.0
BASIC WIND SPEED V_{ult} □ 110 MPH (3 SEC GUST)		EXPOSURE C		
INTERNAL PRESSURE COEFF. □ □/- 0.18				
WALL C&C DESIGN PRESSURE	□□ □ 22.4 PSF □ 15 FT HEIGHT			
	GC□ □ SEE ASCE7-10 FIG 30.4-1			
	GC□ □ □/- 0.18			
PARAPET C&C DESIGN PRESSURE	□□ □ 22.4 PSF □ 15 FT HEIGHT			
	GC□ □ SEE ASCE7-10 FIG 30.9-1			
	GC□ □ □/- 0.00 (NO POROSITY)			

4. SEISMIC DESIGN INFORMATION:

I □ 1.25	OCCUPANCY CAT. III	SEISMIC DESIGN CATEGORY □ E	
S_S □ 2.301	S_1 □ 0.768	S_{DS} □ 1.534	S_{D1} □ 0.768
E□UIVALENT LATERAL FORCE PROCEDURE			
SPECIAL REINFORCED MASONRY WALL			
R □ 5	C_s □ 0.38	MAX STORY DRIFT Δ = 0.010 h	

FOUNDATION AND SLAB ON GRADE NOTES:

1. SEE SOIL REPORT BY: GEOTECHNICAL ENGINEERING GROUP, CITY OF LOS ANGELES
   JOB NO.: 17-074 DATED: AUGUST 22, 2017
   ADDENDUM: NOVEMBER 9, 2017
   SUPPLEMENT: OCTOBER 25, 2018

2. FOR CONTINUOUS AND PAD FOUNDATIONS,
   ALLOWABLE VERTICAL BEARING PRESSURE: 2500 PSF
   (UNDERLAIN BY AT LEAST 30 INCHES OF COMPACTED SOIL)
   ALLOWABLE VERTICAL BEARING PRESSURE □ SHORT TERM: 2500□1.33 □ 3333 PSF
   (UNDERLAIN BY AT LEAST 30 INCHES OF COMPACTED SOIL)
   ALLOWABLE LATERAL BEARING PRESSURE: 275 PSF PER FT OF DEPTH
   DESIGN COEFFICIENT OF FRICTION FOR SLIDING: 0.35

3. THE BEARING VALUE SHOWN ABOVE IS FOR THE TOTAL OF DEAD AND FRE□UENTLY APPLIED LIVE LOADS AND MAY BE INCREASED BY ON THIRD FOR SHORT DURATION LOADING. ADD RECOMMENDATION FOR POLE FOOTING ON SUPPLIED SOILS REPORT.

4. THE CONTRACTOR SHALL CONFORM TO ALL RECOMMENDATIONS AND CONDITIONS INDICATED IN THE SOIL REPORT. THE GEOTECHNICAL ENGINEER SHALL OBSERVE ALL FOOTING EXCAVATIONS PRIOR TO PLACING CONCRETE.

5. SUBSURFACE SOIL PREPARATION:
   A. ALL EXISTING UNDOCUMENTED FILL SHALL BE REMOVED AND RECOMPACTED. ALL TOPSOILS SHALL BE REMOVED AS RE□UIRED BY THE GEOTECHNICAL ENGINEER.
   B. GEOTECHNICAL ENGINEER SHALL BE RETAINED DURING THE OVEREXCAVATION PROCESS. THE ACTUAL DEPTH OF REMOVAL WILL BE DETERMINED DURING GRADING OPERATIONS.
   C. OFFSITE FILL MATERIAL SHALL BE APPROVED BY THE GEOTECHNICAL ENGINEER PRIOR TO PLACEMENT.

6. SPREAD FOOTINGS ARE CENTERED UNDER WALLS AND COLUMNS, UNO.

7. FOOTING ELEVATIONS ARE NOTED ON THE PLANS AND DETAILS AND SHALL BE USED FOR BIDDING. IN ANY CASE, FOOTINGS SHALL BEAR ON FIRM UNDISTURBED SOIL OR ENGINEERED FILL, IN ACCORDANCE WITH THE SOIL REPORT AND DETAILS SHOWN.

8. CONTRACTOR SHALL PROTECT ALL UTILITY LINES, ETC. ENCOUNTERED DURING EXCAVATION AND BACKFILLING.

9. FOOTING BACKFILL AND UTILITY TRENCH BACKFILL WITHIN BUILDING AREA SHALL BE MECHANICALLY COMPACTED IN LAYERS WITH THE APPROVAL OF THE GEOTECHNICAL ENGINEER. FLOODING IS NOT PERMITTED.

10. ALL TRENCHES SHALL COMPLY WITH APPLICABLE OSHA RE□UIREMENTS.

11. ALL EXCAVATIONS SHALL BE PROPERLY BACKFILLED BUT NOT BEHIND RETAINING WALLS BEFORE CONCRETE OR MASONRY ATTAINS ITS FULL DESIGN STRENGTH.

12. THE DESIGN OF ALL RETAINING WALLS AND SUBTERRANEAN BUILDING WALLS INDICATED ON THESE DRAWINGS IS BASED ON DRAINED SOILS.

13. CONSTRUCTION JOINTS (CJ) AND SAWCUT (SC) JOINTS IN SLABS SHALL OCCUR WHERE LOCATED ON PLANS AND DETAILS. CJS SHALL HAVE FORMED POUR STOPS. CONSTRUCTION JOINTS IN WALLS AND FOOTINGS NEED NOT OCCUR AT THE SAME LOCATION, UNO.

14. SEE ARCHITECT'S PLANS FOR LOCATIONS OF SLAB SLOPES, DEPRESSIONS, CURBS, DRAINS, NON-STRUCTURAL PARTITIONS AND OTHER EMBEDDED ITEMS NOT SHOWN ON THE STRUCTURAL PLANS.

15. ALL GRADING, FOUNDATION FOOTINGS, AND DRAINAGE PLANS SHALL BE REVIEWED BY THE GEOTECHNICAL ENGINEER UPON SUBMITTAL. A CERTIFIED LETTER BY THE GEOTECHNICAL ENGINEER IS RE□UESTED STATING THAT THE RECOMMENDATIONS CONTAINED WITHIN THE SOILS REPORT HAVE BEEN INCORPORATED INTO THE PROJECT PLANS AND SPECIFICATIONS PRIOR TO CONSTRUCTION.

16. PRIOR TO THE CONTRACTOR RE□UESTING A BUILDING DEPARTMENT FOUNDATION INSPECTION, THE SOILS ENGINEER SHALL ADVISE THE BUILDING OFFICIAL IN WRITING THAT:
   A. THE BUILDING PAD WAS PREPARED IN ACCORDANCE WITH THE SOILS REPORT.
   B. THE UTILITY TRENCHES HAVE BEEN PROPERLY BACKFILLED AND COMPACTED.
   C. THE FOUNDATION EXCAVATIONS COMPLY WITH THE INTENT OF THE SOILS REPORT.

   SOIL ENGINEERS APPROVAL ON FOUNDATION PLAN IS RE□UIRED PRIOR TO ISSUANCE OF PERMIT.

EXISTING CONDITIONS NOTES:

1. FIELD VERIFY ALL CONDITIONS & DIMENSIONS PRIOR TO SHOP DRAWING PRODUCTION AND FABRICATION OF STRUCTURAL ELEMENTS.

2. WHERE ALL OTHER EXISTING CONDITIONS VARY SIGNIFICANTLY FROM THOSE SHOWN ON THESE DRAWINGS, THE STRUCTURAL ENGINEER SHALL BE NOTIFIED PRIOR TO CONTINUED CONSTRUCTION RELATED TO SUBJECT CONDITIONS.

3. SHORE ALL EXISTING CONSTRUCTION AS RE□UIRED.

4. ALL EXISTING (E) CONNECTIONS AT ELEMENTS TO BE REPLACED SHALL BE REPLACED OR RE-ATTACHED TO MATCH EXISTING CONDITIONS.

5. VERIFY LOCATION OF EXISTING (E) REBAR BEFORE FABRICATION USING NON-DESTRUCTIVE TESTING.

6. SPECIAL INSPECTION IS RE□UIRED FOR ALL WORK.

7. SEE "AS BUILT" DRAWINGS FOR EXISTING BUILDING DESIGN FOR ITEMS NOT SHOWN OR NOTED.

8. ALL EXISTING (E) WOOD ELEMENTS TO REMAIN SHALL BE FIELD INSPECTED DURING CONSTRUCTION AND TREATED FOR DRYROT REMOVAL / CONTROL WHERE EXISTING GLB'S TO REMAIN ARE FOUND TO HAVE EXTENSIVE DRYROT DEEPER THAN THE TOP TWO LAMINATIONS (3"), THE STRUCTURAL ENGINEER SHALL BE NOTIFIED PRIOR TO CONTINUED CONSTRUCTION RELATED TO SUBJECT GLB'S.

EXISTING UNDERGROUND UTILITY NOTES:

1. THE ARCHITECT AND ENGINEERS ARE NOT RESPONSIBLE FOR THE LOCATIONS OF EXISTING UNDERGROUND UTILITIES WHETHER OR NOT SHOWN ON THE DRAWINGS. THE LOCATION OF ANY EXISTING UNDERGROUND UTILITIES SHOWN ON THE DRAWINGS ARE APPROXIMATE. THE CONTRACTOR SHALL IMMEDIATELY NOTIFY THE OWNER SHOULD ANY SUCH UNIDENTIFIED CONDITIONS BE DISCOVERED.

2. THE CONTRACTOR SHALL BE RESPONSIBLE FOR ANY DAMAGES WHICH MAY RESULT FROM HIS FAILURE TO EXACTLY LOCATE AND PRESERVE ALL EXISTING UNDERGROUND UTILITIES.

3. BEFORE COMMENCING ANY EXCAVATION, THE CONTRACTOR SHALL OBTAIN AN UNDERGROUND SERVICE ALERT IN□UIRY I.D. NUMBER BY CALLING 1-800-422-4133. TWO WORKING DAYS SHALL BE ALLOWED AFTER THE I.D. NUMBER IS OBTAINED AND BEFORE THE EXCAVATION WORK IS STARTED THAT UTILITY OWNERS CAN BE NOTIFIED.

REINFORCING STEEL NOTES:

1. REINFORCING GRADES FOR CONCRETE OR MASONRY:
   A. ALL BARS EXCEPT THOSE TO BE WELDED..... ASTM A615, GRADE 60
   B. TIES AND STIRRUPS ..... ASTM A615, GRADE 60
   C. WELDED WIRE FABRIC ..... ASTM A185
   D. ALL BARS TO BE WELDED ..... ASTM A706, GRADE 60
   E. ALL BARS IN THE CONCRETE SHEARWALL INDICATED ON WALL ELEVATION AS "SW" SHOULD BE A706, GRADE 60.

2. MAINTAIN MINIMUM CONCRETE COVER FROM FACE OF CONCRETE TO EDGE OF ALL REINFORCEMENT AS FOLLOWS (UNO): (SEE PLAN/ SECTION FOR CONCRETE W/ FIRE RATING.)

CONDITION	COVER
CONCRETE POURED AGAINST EARTH	3"
CONCRETE POURED IN FORMS AND EXPOSED TO WEATHER OR EARTH	
- #6 BARS AND LARGER	2"
- #5 BARS AND SMALLER	1 1/2"
INTERIOR COLUMNS AND BEAMS	1 1/2"
INTERIOR WALL FACES AND RAISED SLABS	1 1/2"
STRUCTURAL SLABS ON GRADE	
- FROM BOTTOM OF SLAB	2"
- FROM TOP OF SLAB	1 1/2"
OTHER CONCRETE NOT EXPOSED TO WEATHER OR EARTH FOR #11 BARS AND SMALLER	1"

   PROVIDE THE LARGEST COVER RE□UIRED FOR ALL APPLICABLE CONDITIONS. WHERE #3 STIRRUPS OR TIES ARE USED, ENSURE THAT THE COVER FOR LONGITUDINAL BARS IS ADE□UATE.

3. REINFORCEMENT SHALL BE PLACED IN ACCORDANCE WITH THE CONCRETE REINFORCING STEEL INSTITUTE (CRSI) "MANUAL OF STANDARD PRACTICE". EACH REINFORCING BAR SHALL BE WIRED TO A CROSS BAR AT A MAXIMUM SPACING OF 24" OC. PROVIDE ALL ACCESSORIES NECESSARY TO SUPPORT REINFORCING IN POSITIONS SHOWN ON THE PLANS.

4. SPLICES IN CONTINUOUS REINFORCEMENT AS USED IN WALLS, WALL FOOTINGS, ETC., SHALL HAVE A CLASS "B" LAP (1□6" MIN) AND THE SPLICES IN ADJACENT BARS SHALL BE NOT LESS THAN 5□0" APART. VERTICAL WALL BARS SHALL BE SPLICED AT OR NEAR FLOOR LINES. BARS MAY BE WIRED TOGETHER AT SPLICES OR LAPS EXCEPT FOR TOP REINFORCING OF BEAMS AND SLABS OR WHERE SPECIFICALLY DETAILED TO BE SEPARATED. WELDED WIRE FABRIC SHALL BE LAPPED 12" MINIMUM.

5. ALL DOWELS, ANCHOR BOLTS AND OTHER HARDWARE TO BE SET IN CONCRETE SHALL BE TIED IN PLACE PRIOR TO PLACEMENT OF CONCRETE. NO WET SETTING, STABBING, RODDING OR OTHER MOVEMENT OF EMBEDDED ITEMS SHALL BE PERFORMED DURING PLACEMENT OF CONCRETE.

6. BEND REINFORCING BARS COLD.

7. STEEL SHALL BE KEPT CLEAN AND FREE OF RUST.

8. DOWELS BETWEEN FOOTING AND WALLS OR COLUMNS SHALL BE THE SAME GRADE, SIZE AND SPACING AS THE MAIN REINFORCING UNO.

9. ALL BARS SHALL BE MARKED SO THEIR IDENTIFICATION CAN BE MADE WHEN THE FINAL IN PLACE INSPECTION IS MADE.

10. CHAIRS OR SPACERS FOR REINFORCING SHALL BE NON-FERROUS OR PLASTIC COATED WHEN RESTING ON EXPOSED SURFACES.

STRUCTURAL STEEL NOTES:

1. DESIGN, FABRICATION AND ERECTION OF STRUCTURAL STEEL SHALL CONFORM TO THE SPECIFICATIONS AND STANDARD OF THE AMERICAN INSTITUTE OF STEEL CONSTRUCTION (AISC), AS CONTAINED IN THE LATEST EDITION OF "AISC MANUAL OF STEEL CONSTRUCTION".

2. ALL STRUCTURAL STEEL SHALL BE ERECTED PLUMB AND TRUE TO LINE. TEMPORARY BRACING SHALL BE INSTALLED AND SHALL BE LEFT IN PLACE UNTIL OTHER MEANS IS PROVIDED TO ADE□UATELY BRACE THE STRUCTURE.

3. PROVIDE THE FOLLOWING MATERIALS FOR STRUCTURAL STEEL UNO:

STRUCTURAL STEEL GRADES:		
A.	ALL WIDE FLANGE SECTIONS	ASTM A992
B.	S□UARE OR RECTANGULAR HOLLOW STRUCTURAL SECTIONS (HSS)	ASTM A500, GRADE B (F□46 KSI)
C.	ROUND HOLLOW STRUCTURAL SECTIONS (HSS)	ASTM A500, GRADE B (F□42 KSI)
D.	PIPES	ASTM A53 TYPE E OR S, GRADE B, (F□35 KSI)
E.	PLATES, ANGLES, CHANNELS & TEES	ASTM A36
F.	MACHINE BOLTS (MB)	ASTM A307
G.	HIGH STRENGTH BOLTS (HSB)	ASTM A325 TYPE N
H.	WELDED HEADED STUDS	ASTM A108
I.	THREADED RODS FOR ANCHOR BOLTS	ASTM F1554, GRADE 36

4. EXCEPT AS OTHERWISE NOTED, ALL BOLTS SHALL BE HIGH STRENGTH BOLTS.

5. ALL CONNECTIONS NOT SHOWN SHALL CONFORM TO THE "AISC MANUAL OF STEEL CONSTRUCTION" AND SHALL BE SUBMITTED ON SHOP DRAWINGS FOR REVIEW BY SEOR PRIOR TO FABRICATION.

6. ALL WELDED HEADED STUDS, THREADED STUDS, AND DEFORMED BARS SHALL BE NELSON, OR E□UIVALENT, AND WELDED (IN ACCORDANCE WITH MANUFACTURER'S RECOMMENDATIONS BY CERTIFIED WELDERS) SO AS TO FULLY DEVELOP THE TENSILE CAPACITY OF THE CONNECTOR.

7. HIGH STRENGTH BOLTS SHALL BE INSTALLED IN ACCORDANCE WITH THE CURRENT EDITION OF THE "AISC SPECIFICATION FOR STRUCTURAL JOINTS USING ASTM A325 OR A490 BOLTS". SLIP CRITICAL BOLTS (SC) SHALL BE USED FOR ALL "LATERAL FORCE RESISTING SYSTEM" (LFRS) MEMBER STEEL-TO-STEEL CONNECTIONS. TIGHTEN SLIP CRITICAL BOLTS USING ONE OF THE FOLLOWING: TWIST-OFF BOLTS, TENSION CONTROL CALIBRATED WRENCH OR DIRECT TENSION INDICATORS. HIGH STRENGTH BOLTS NOT IN THE LFRS MAY BE INSTALLED HAND TIGHT.

8. BOLTS WITH UPSET THREADS ARE NOT ALLOWED. USE THE APPROPRIATE NUT AND WASHER TYPE FOR THE SPECIFIED BOLT.

9. ALL STEEL FABRICATION SHALL BE PERFORMED BY A LICENSED FABRICATOR.

10. ALL STRUCTURAL STEEL AND MISCELLANEOUS STEEL PERMANENTLY EXPOSED TO THE ELEMENTS SHALL BE HOT DIP GALVANIZED AFTER FABRICATION UNLESS A WEATHER PROOF COATING IS SPECIFIED BY THE ARCHITECT UNO. STAINLESS AND WEATHERING STEELS ARE EXCEPTED WHERE SPECIFIED.

11. SEE ARCHITECTURAL DRAWINGS FOR NAILER HOLES, WELDED STUDS OR OTHER ITEMS NOT SHOWN IN THESE DRAWINGS. WHERE STEEL IS EMBEDDED IN CONCRETE OR MASONRY, PROVIDE HOLES AS RE□UIRED FOR PASSAGE OF CONTINUOUS REINFORCING BARS WHERE INDICATED ON DRAWINGS. DO NOT CUT HOLES IN STRUCTURAL STEEL WITHOUT PRIOR APPROVAL OF SEOR.

12. ALL ARCHITECTURALLY EXPOSED STRUCTURAL STEEL (AESS) SHALL COMPLY WITH AISC CODE OF STANDARD PRACTICE, SECTION 10.

13. PLACE NON-SHRINK OR DRYPACK GROUT UNDER ALL BASE PLATES AND ALLOW TO CURE BEFORE APPLYING LOADS.

STRUCTURAL CONCRETE NOTES:

1. CONCRETE SHALL BE MIXED, PLACED AND CURED IN ACCORDANCE WITH ACI 318, LATEST EDITION, AND PROJECT SPECIFICATIONS.

2. CONCRETE SHALL NOT BE DROPPED THROUGH REINFORCING STEEL (AS IN WALLS) SO AS TO CAUSE SEGREGATION OF AGGREGATES. IN SUCH CASES, HOPPERS AND VERTICAL CHUTES OR TRUNKS SHALL BE USED. CHUTES OR TRUNKS SHALL BE OF VARIABLE LENGTHS SO THAT FREE UNCONFINED FALL OF CONCRETE SHALL NOT EXCEED SIX FEET. A SUFFICIENT NUMBER OF CHUTES OR TRUNKS SHALL BE USED TO ENSURE THE CONCRETE IS KEPT LEVEL AT ALL TIMES.

3. CONSTRUCTION JOINTS SHALL BE CLEANED AND ROUGHENED BY REMOVING THE ENTIRE SURFACE TO EXPOSE CLEAN AGGREGATE SOLIDLY EMBEDDED IN THE MORTAR MATRIX. SLUSH WITH A COAT OF NEAT CEMENT BEFORE PLACING CONCRETE. SEE PLANS AND DETAILS FOR LOCATION AND TYPE OF CONSTRUCTION JOINT. LOCATIONS OF ADDITIONAL CONSTRUCTION JOINTS NOT SHOWN ON THESE PLANS SHALL BE SUBMITTED FOR APPROVAL BY THE EOR PRIOR TO PLACING ANY CONCRETE.

4. STRUCTURAL CONCRETE SHALL MEET THE FOLLOWING DESIGN CRITERIA:

LOCATION	MIN 28-DAY COMP STRENGTH	CONC TYPE[a]	MAX AGGR. SIZE	MAX W/C RATIO	MAX SLUMP[b]
FOUNDATION	4000 PSI	NWC	1"	0.45	4"
SURGE PIT	4000 PSI	NWC	1"	0.45	4"
SLAB ON GRADE	3000 PSI	NWC	1"	0.45	4"
ALL OTHER STRUCTURAL CONCRETE NOT NOTED ABOVE	3000 PSI	NWC	1"	0.45	6"
CONC WALL / RET. WALL	4000 PSI	NWC	1"	0.45	4"

   a. MAXIMUM DRY WEIGHT OF LIGHTWEIGHT CONCRETE SHALL BE 115 PCF, UNLESS APPROVED BY SEOR.
   □. SLUMP MEASURED PRIOR TO SUPERPLASTICIZER, WHERE OCCURS.

5. CONCRETE MIX DESIGN AND TESTING SHALL MEET THE RE□UIREMENTS OF THE BUILDING CODE, AND SPECIFICATIONS. ALL CONCRETE MIXES SHALL BE DESIGNED BY A RECOGNIZED TESTING LAB STAMPED AND SEALED BY A LICENSED CALIFORNIA CIVIL ENGINEER AND SUBMITTED TO THE SEOR FOR REVIEW PRIOR TO CONCRETE PLACEMENT. STRUCTURAL CONCRETE MIXES SHALL CONSIST OF 5 SACK MINIMUM UNO.

6. AGGREGATES IN NORMAL WEIGHT CONCRETE SHALL CONFORM TO ASTM C-33 (HARDROCK). AGGREGATES IN LIGHT WEIGHT CONCRETE SHALL CONFORM TO ASTM C-330.

7. COMPRESSIVE STRENGTH TEST REPORTS SHALL BE SUBMITTED TO THE BUILDING DEPARTMENT AND THE SEOR.

8. PORTLAND CEMENT SHALL BE TYPE II FOR ALL CONCRETE CONFORMING TO ASTM C150, LOW ALKALI. MILL TESTS WITH CERTIFICATES OF COMPLIANCE SHALL BE SUBMITTED.

9. FLY ASH OR OTHER POZZOLANS CONFORMING TO ASTM C618 CLASS N OR F MAY BE USED AS A PARTIAL SUBSTITUTION FOR PORTLAND CEMENT UP TO A MAXIMUM OF 25□ TOTAL CEMENTITIOUS MATERIALS BY WEIGHT IF THE MIX DESIGN IS PROPORTIONED PER ACI318,SECTION 5.3.

10. CONCRETE MIXING OPERATIONS, ETC. SHALL CONFORM TO ASTM C94.

11. LEAN CONCRETE, WHERE SPECIFICALLY INDICATED, SHALL CONTAIN 2 SACKS OF CEMENT PER CUBIC YARD OF CONCRETE.

12. DRYPACK OR NONSHRINK GROUT SHALL HAVE A MINIMUM 28 DAY COMPRESSIVE STRENGTH OF 5000 PSI, AND CONSIST OF MASTERFLOW 713, FIVE STAR GROUT, SIKA GROUT 212, EMBECO 636, OR APPROVED E□UAL. FOR THICK GROUT LAYERS FOLLOW MANUFACTURER'S GUIDELINES TO ATTAIN THE RE□UIRED STRENGTH, WHICH MAY INCLUDE THE ADDITION OF PEA GRAVEL.

13. DO NOT USE ANY CONCRETE OR GROUT CONTAINING CHLORIDES. WATER USED IN MIX SHALL BE CLEAN AND POTABLE.

14. PRIOR TO ERECTING ANY ELEMENTS THAT LOAD THE FOUNDATION, CONCRETE MUST REACH AN UNCONFINED COMPRESSION STRENGTH OF 2000 PSI MINIMUM AS DETERMINED BY TESTING OR PREVIOUSLY DOCUMENTED DATA FOR THE MIX DESIGN USED UNDER SIMILAR CONDITIONS, AND MUST BE ALLOWED TO CURE FOR A MINIMUM OF 3 DAYS.

15. FOR INTERIOR SLABS-ON-GRADE AND ALL OTHER SLABS RECEIVING ADHERED FLOORING FINISHES (I.E., GLUED, ETC.), THE MAXIMUM W/C RATIO SHALL NOT EXCEED 0.45. CURING COMPOUNDS USED ON CONCRETE THAT IS TO RECIEVE FINISHES SHALL BE COMPATIBLE WITH TILE AND ADHESIVES OR GROUTS IN ACCORDANCE WITH MANUFACTURER'S DATA AND BE APPROVED BEFORE USE.

16. MAINTAIN CONCRETE ABOVE 50 DEGREES FAHRENHEIT AND IN A MOIST CONDITION FOR A MINIMUM OF 7 DAYS AFTER PLACEMENT UNLESS OTHERWISE ACCEPTED BY SEOR.

17. SEE ARCHITECTURAL DRAWINGS FOR WALL OPENINGS, WALL OFFSETS, CHAMFERS, KERFS, DRIPS AND FOR EXTENT OF DEPRESSIONS, RAMPS, ETC. PROVIDE SLEEVES FOR ALL PIPES THROUGH CONCRETE WALLS AND FOOTINGS WHERE SHOWN ON THESE DRAWINGS. CORING IS NOT PERMITTED WITHOUT PRIOR APPROVAL BY THE SEOR.

18. EXPOSED CORNERS OF SLABS, BEAMS, WALLS, COLUMNS, ETC. SHALL BE FORMED WITH 3/4" CHAMFER, UNO.

WELDING NOTES:

1. WELDING PROCEDURES, ELECTRODES AND WELDER □UALIFICATIONS SHALL CONFORM TO THE "CODE FOR WELDING IN BUILDING CONSTRUCTION", AMERICAN WELDING SOCIETY (AWS), D1.1 AND THE AISC "SPECIFICATIONS FOR THE DESIGN, FABRICATION AND ERECTION OF STRUCTURAL STEEL FOR BUILDINGS".

2. ALL WELDERS SHALL HAVE EVIDENCE OF PASSING THE AWS STANDARD □UALIFICATION TESTS, AND SHALL BE CERTIFIED FOR THE WORK THEY ARE PERFORMING.

3. PROJECT WELDING SHALL BE PERFORMED ONLY IN ACCORDANCE WITH WELDING PROCEDURE SPECIFICATIONS (WPS) SUBMITTED BY THE CONTRACTOR AND REVIEWED BY THE SEOR AND PROJECT WELDING INSPECTOR. THE WPS SHALL BE IN ACCORDANCE WITH AWS D1.1-D1.4 CURRENT EDITION.

4. WELDING OF STRUCTURAL STEEL SHALL BE PERFORMED PER AWS D1.1 USING E70XX ELECTRODES UNLESS OTHERWISED NOTED.

5. WELDING OF REINFORCING BARS SHALL BE PERFORMED PER AWS D1.4 USING E90XX ELECTRODES.

6. ALL FULL PENETRATION WELDS SHALL BE ULTRA-SONIC TESTED PER AWS D1.1.

7. ALL GROOVE OR BUTT WELDS SHALL BE COMPLETE PENETRATION WELDS. ALL EXPOSED BUTT WELDS SHALL BE GROUND SMOOTH.

8. ALL EXPOSED WELDS ON ARCHITECTURALLY EXPOSED STRUCTURAL STEEL (AESS) SHALL COMPLY WITH AISC CODE OF STANDARD PRACTICE, SECTION 10.

9. FIELD WELDS HAVE BEEN INDICATED WHERE THEY ARE EXPECTED TO OCCUR. THE CONTRACTOR SHALL DETERMINE THE ACTUAL FIELD WELDING NECESSARY TO COMPLETE THE PROJECT AND INCLUDE ALL ASSOCIATED COSTS WITHIN THE BASE BID.

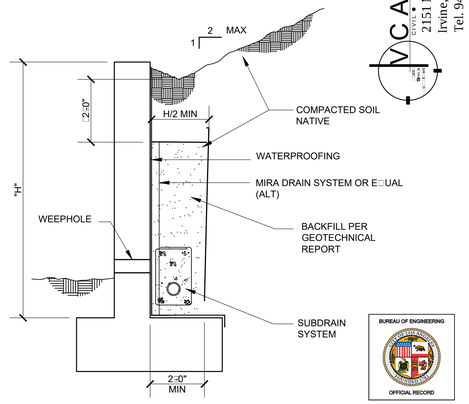

METAL DECK NOTES AND SCHEDULE (FILLED & UNFILLED):

1. MATERIAL FOR METAL DECK SHALL HAVE A MIN YIELD STRENGTH OF 38 KSI AND CONFORM TO ASTM A653-SS GRADE 33 WITH GALVANIZED G60 COATING COMPLYING WITH ASTM A525.

2. SEE TYPICAL DETAILS FOR REINFORCING OF DECK AROUND OPENINGS. CONTRACTOR SHALL COORDINATE SIZE AND LOCATIONS OF OPENINGS WITH THE VARIOUS TRADES. NO LOADS SHALL BE HUNG FROM DECK WITHOUT APPROVAL OF SEOR.

3. FLOOR AND ROOF DECK IS DESIGNED FOR UNSHORED CONSTRUCTION, UNO. MAINTAIN 3 SPAN CONDITION WHEREVER POSSIBLE (2 SPAN MIN) EXCEPT AT STAIR LANDING AND WHERE NOTED OTHERWISE ON PLANS.

4. PROVIDE 2" MINIMUM BEARING AT ALL SUPPORTS. END LAPS OF METAL DECK SHALL BE A MINIMUM OF 2" AND SHALL OCCUR ONLY OVER SUPPORTS. DECK SHALL BE LAID OUT SO THAT A LOW FLUTE FALLS ON EACH PARALLEL SUPPORT.

5. INSTALL DECK BY WELDING. USE 3/4" DIAMETER PUDDLE WELDS OR WELDED STUDS TO SUPPORTS SPACED AS SHOWN ON CONSTRUCTION DRAWINGS. SPACING FOR TOP SEAM, SIDE SEAM, BUTTON PUNCH, OR PUNCHLOK CONNECTION SHALL BE IN ACCORDANCE WITH DRAWINGS. SEE TYPICAL METAL DECK DETAILS..

6. SUBMIT SHOP DRAWINGS FOR METAL DECK TO THE SEOR FOR REVIEW PRIOR TO FABRICATION. SHOP DRAWINGS SHALL SHOW TYPE OF DECK, LAYOUT OF DECK, THE SIZE AND LOCATION OF ANY OPENINGS OF WIDTH GREATER THAN 1□0", AND ATTACHMENT METHOD.

7. ALTERNATES TO TYPE OF DECK AND FASTENING MAY BE USED WITH THE APPROVAL OF THE SEOR AND DSA. DECK PROPERTIES SHALL BE E□UAL TO OR GREATER THAN THOSE SHOWN ON THE PLANS. ANY DECK OR METHO

ROUGH CARPENTRY / WOOD NOTES:

1. ALL GRADES SPECIFIED ARE MINIMUM GRADES RE□UIRED.
2. DOUGLAS FIR (DF) SHALL BE GRADED BY THE WESTERN WOOD PRODUCTS ASSOCIATION GRADING RULES, AND ASTM D245.
3. REDWOOD SHALL BE GRADED BY THE CALIFORNIA REDWOOD ASSOCIATION, REDWOOD INSPECTION SERVICE.
4. SILL PLATES SHALL BE PRESSURE-TREATED (PT) DOUGLAS FIR #2. REDWOOD IS PERMITTED WITH SEOR APPROVAL.
5. NON-LOAD BEARING STUDS, TOP PLATES, BLOCKING, FURRING AND BRACING SHALL BE.....DF #2
   JOISTS, RAFTERS, PURLINS, BEAMS & POSTS SHALL BE .....DF #1 (UNO)
   LOAD BEARING STUDS SHALL BE: (UNO ON PLAN)
   STUDS 0-15□.....DF #2
   STUDS □15□.....DF #1
   BLOCKING □ I-JOIST SHALL BE 1 ¾" THK PARALLAM PSL BY WEYERHOUSER OR E□. (1.55E GRADE) ICC-ESR-1387
6. MOISTURE CONTENT OF SAWN LUMBER SHALL NOT EXCEED 19□ WHEN FRAMING STARTS OR SHEATHING IS APPLIED. ANY NONCOMPLIANT WORK SHALL BE REJECTED AND REFRAMED WITH ACCEPTABLE LUMBER.
7. TIMBERS 4" NOMINAL IN THE LEAST DIMENSION SHALL NOT CONTAIN BOXED HEART.
8. SILL PLATES SHALL BE PRESSURE-TREATED AND SHALL BE BOLTED TO CONCRETE WITH 5/8" DIAMETER ANCHOR BOLTS AT 32" OC MAX, UNO WITH A BOLT BETWEEN 6" TO 9" FROM THE END OF EACH PIECE OF SILL (2 BOLTS MIN EACH PIECE). PIECE OF SILL SHALL BE CONSIDERED ENDED WHERE PLATE IS CUT OUT OVER ONE-THIRD OF CROSS-SECTION.
9. ANCHOR BOLTS FOR NON-STRUCTURAL WALLS SUPPORTED ON SLABS SHALL HAVE 3 1/2" EMBEDMENT (UNO) MEASURED FROM TOP OF SLAB.
10. ANCHOR BOLTS FOR STRUCTURAL WALLS SHALL HAVE 12" EMBEDMENT (UNO) MEASURED FROM TOP OF SLAB.
11. STUD BEARING WALLS AND PARTITIONS SHALL HAVE DOUBLE TOP PLATES LAPPED AT WALL AND PARTITION INTERSECTIONS. JOINTS IN UPPER AND LOWER MEMBERS OF DOUBLE TOP PLATES SHALL BE STAGGERED AT LEAST 4□0".
12. HOLES IN WOOD AND STEEL MEMBERS FOR BOLTS SHALL BE THE NOMINAL BOLT DIAMETER PLUS 1/16".
13. ALL BOLTS IN WOOD SHALL BE ASTM A307 STANDARD BOLTS, UNO. BOLTS AND SCREWS SHALL BE TIGHTENED AT TIME OF ERECTION AND RETIGHTENED BEFORE CLOSING IN OR AT THE COMPLETION OF THE JOB.
14. HOLES IN WOOD FOR LAG SCREW SHANK SHALL BE BORED TO THE SAME DIAMETER AND DEPTH AS THE SHANK, AND FOR THE THREADED PORTION BORED WITH A BIT NOT LARGER THAN THE BASE OF THREADS.
15. LAG SCREWS AND SCREWS SHALL BE SCREWED AND NOT DRIVEN INTO PLACE.
16. STEEL WASHERS SHALL BE PROVIDED UNDER HEADS AND NUTS OF ALL BOLTS AND LAG SCREWS WHICH BEAR ON WOOD. STANDARD CUT WASHERS MAY BE USED IN ALL CASES EXCEPT SILL PLATES AND WOOD LEDGERS AGAINST CONCRETE OR MASONRY, WHICH SHALL BE ONE OF THE FOLLOWING SIZES:

BOLT & LAG SCREW DIAMETER	STEEL PLATE WASHER SIZE	MALLEABLE IRON WASHER SIZE
1/2"	2" S□ □1/4"	2 1/2"Ø x 1/4"
5/8"	2 1/2" S□ □1/4"	2 3/4Ø x 5/16"
3/4"	3" S□ □5/16"	3"Ø x 7/16"
7/8"	3 1/2" S□ □3/8"	3 1/2"Ø x 7/16"
1"	3 3/4" S□ □3/8"	4"Ø x 1/2"

NOTE: WASHERS UNDER CARRIAGE BOLT HEADS SHALL BE LARGE ENOUGH TO ALLOW FOR S□UARE SHOULDERS.

17. INSTALL WINDOWS AND DOORS IN STUD WALLS AFTER DEAD LOADS ARE APPLIED, AND PROVIDE A 1/2" SHIM SPACE AT THE HEAD CONDITION.
18. FASTENERS, INCLUDING NAILS, NUTS AND WASHERS, IN CONTACT WITH PRESERVATIVE - TREATED WOOD SHALL BE OF HOT-DIPPED ZINC COATED GALVANIZED STEEL OR STAINLESS STEEL.

TYPICAL WOOD FRAMING NOTES:

1. SEE THIS SHEET FOR TYPICAL NOTES, DETAILS, AND NAILING.
2. ONLY LOAD BEARING AND/OR SHEAR WALLS ARE SHOWN. SEE ARCHITECTURAL DRAWINGS FOR ALL OTHER PARTITIONS.
3. ELEVATIONS SHOWN ON PLANS ARE FROM FINISHED FIRST FLOOR, DATUM ELEVATION □0-0".
4. ALL EXTERIOR WALLS AND INTERIOR BEARING WALLS ARE 2□6 STUDS □ 16"OC TYPICAL, UNO.
5. ALL EXTERIOR STUD WALLS SHALL BE COMPLETELY SHEATHED WITH 15/32" APA RATED SHEATHING, EXPOSURE-1 (32/16) UNO, REGARDLESS SHEAR WALL LENGTH SHOWN ON PLAN.
6. INTERIOR STRUCTURAL SHEATHED WALLS (SHEAR WALL) ARE SHOWN ON PLAN ABOVE AND BELOW ANY OPENING AND ANY WALL ON THE SAME LINE OF SHEAR WALL SHALL BE SHEATHED WITH THE SAME PLYWOOD SHEATHING W/ 10d NAILS □ 6" & 12" O/C (EN, BN). BLOCK ALL PLYWOOD EDGES.
7. ALL STRUCTURAL WALL SHEATHING IS SPLICED ON 2" NOMINAL BLOCKING AT HORIZONTAL JOINTS, UNO.
8. STRUCTURAL FLOOR AND ROOF SHEATHING SHALL BE AS SPECIFIED BELOW. NOTE: 1/8" GAP SHALL BE PROVIDED BETWEEN ADJACENT PANELS. PANELS WITH GRADE STAMP INDICATION "SIZED FOR SPACING" MAY BE USED TO FACILITATE THIS RE□UIREMENT. SEE PLANS FOR RE□UIRED BOUNDARY AND EDGE NAILING NOT LISTED BELOW. FLOOR SHEATHING SHALL BE GLUED AND NAILED PER PLAN.

   (□- SHEATHING □ EXTERIOR DECKS SHALL BE EXTERIOR RATED PLYWOOD.)

   BN□BOUNDARY NAILING
   EN□EDGE NAILING
   FN□FIELD NAILING
9. SEE PLANS FOR LOCATION OF NOMINAL 2X FLAT BLOCKING AT ROOF AND FLOOR SHEATHING PANEL JOINTS. SEE THIS SHEET FOR PLY CLIP RE□UIREMENTS AT UNBLOCKED ROOF PANEL JOINTS. T&G FLOOR SHEATHING IS NOT RE□UIRED WHERE JOINTS ARE BLOCKED.
10. BRIDGING SHALL BE 2□3 NOMINAL, OR SIMPSON "NB" AND SHALL OCCUR AS SHOWN ON PLANS OR SHEET S0.02.
11. SAWN LUMBER GRADING SHALL BE PER "TIMBER SPECIFICATIONS" NOTED ON THESE PLANS.
12. (S) INDICATES METAL FRAMING CONNECTORS MANUFACTURED BY SIMPSON STRONG TIE COMPANY (CURRENT CATALOG) OR "USP" WITH E□UIVALENT ICC PUBLISHED VALUES AND SHALL BE INSTALLED PER SPECIFICATIONS, NO EXCEPTIONS.

NAILING SCHEDULE

(UNLESS OTHERWISE NOTED ON PLANS)

NAIL SPACING TO BE NOT LESS THAN RE□UIRED PENETRATION. EDGE AND END DISTANCES SHALL BE NOT LESS THAN HALF THIS SPACING. ALL SPACING AND EDGE AND END DISTANCES SHALL BE SUCH AS TO AVOID SPLITTING OF THE WOOD. HOLES FOR NAILS, WHERE NECESSARY TO PREVENT SPLITTING, SHALL BE BORED OF A DIAMETER SMALLER THAN THAT OF THE NAILS. COMMON OR BOX NAILS MAY BE USED FOR NAILING AT TYPICAL CONNECTIONS NOTED BELOW (U.N.O.). FOR ALL CONNECTIONS OTHERWISE NOTED OR DETAILED ON PLANS, COMMON NAILS SHALL BE USED (SEE SCHEDULE BELOW).

CONNECTION, NAIL TYPE	NAILING
JOISTS TO SILL OR GIRDER, TOENAIL	(3) 8d
BRIDGING TO JOIST, TOENAIL EACH END	(2) 8d
1" □6" SUBFLOOR OR LESS TO EACH JOIST, FACE NAIL	(2) 8d
WIDER THAN 1" □6" SUBFLOOR TO EACH JOIST, BLIND & FACE NAIL	(3) 8d
2" SUBFLOOR TO JOIST OR GIRDER, BLIND AND FACE NAIL	(2) 16d
SILL PLATE TO JOIST OR BLOCKING, FACE NAIL	16d □ 16" OC
TOP PLATE TO STUD, END NAIL	(2) 16d
STUD TO SILL PLATE	(4) 8d, TOENAIL OR (2) 16d, END NAIL
DOUBLE STUDS, FACE NAIL	16d □ 24" OC
DOUBLE TOP PLATES, FACE NAIL	16d □ 16"OC (COMMON)
TOP PLATES, LAPS, FACE NAIL	(8) 16d (UNO) (18) 16d □ SHEARWALL LOCATIONS
TOP PLATES AT INTERSECTIONS, FACE NAIL	(2) 16d
CONTINUOUS HEADER, TWO PIECES	16d □ 16" OC ALONG EACH EDGE
CEILING JOISTS TO PLATE, TOENAIL	(3) 8d
CONTINUOUS HEADER TO STUD, TOENAIL	(4) 8d
CEILING JOISTS, LAPS OVER PARTITIONS, FACE NAIL	(3) 16d
CEILING JOISTS TO PARALLEL RAFTERS, FACE NAIL	(3) 16d
RAFTER TO PLATE, TOENAIL	(3) 8d
1" BRACE TO EACH STUD & PLATE, FACE NAIL	(2) 8d
1":8" SHEATHING OR LESS TO EACH BEARING, FACE NAIL	(2) 8d
WIDER THAN 1":8" SHEATHING TO EACH BEARING, FACE NAIL	(3) 8d
BUILT-UP CORNER STUDS	16d □ 24" OC
BUILT-UP GIRDERS AND BEAMS	20d □ 32" OC AT TOP, BOTT & STGRD (2) 20d AT ENDS AND □ EA SPLICE (2) 16d □ EA BEARING

NAIL SCHEDULE (COMMON NAILS)		
SIZE	DIAMETER (IN)	LENGTH (IN)
8d	0.131	2 ½
10d	0.148	3
12d	0.148	3 1/4
16d	0.162	3 1/2
20d	0.192	4

SHORTENED 10d COMMON NAILS MAY BE USED TO FASTEN WOOD STRUCTURAL PANELS UNO. USE THE FOLLOWING MINIMUM LENGTHS: 10d □2 ¼" FOR 15/32" OR THINNER PANELS, 10d □2 ½" FOR 19/32" PANELS, AND FULL LENGTH FOR ⅝" OR THICKER PANELS.

COLD-FORMED STEEL FRAMING NOTES:

1. DESIGN, FABRICATION AND ERECTION OF COLD-FORMED STEEL FRAMING SHALL CONFORM TO THE SPECIFICATIONS AND STANDARD OF THE AMERICAN IRON AND STEEL INSTITUTE (AISI), AS CONTAINED IN THE "SPECIFICATION FOR THE DESIGN OF COLD-FORMED STEEL STRUCTURAL MEMBERS", LATEST EDITION, INCLUDING ALL APPLICABLE AMENDMENTS.
2. ALL COLD-FORMED STEEL FRAMING SHALL BE ERECTED PLUMB AND TRUE TO LINE. TEMPORARY BRACING SHALL BE INSTALLED AND LEFT IN PLACE UNTIL OTHER MEANS IS PROVIDED TO ADE□UATELY BRACE THE STRUCTURE.
3. COLD-FORMED STEEL GRADES:
   A. 18 GA (43 MILS) OR THINNER .....ASTM A1003 GRADE 33 (FY □33 KSI)
   B. 16 GA (54 MILS) AND THICKER .....ASTM A1003 GRADE 50 (FY □50 KSI)
4. ALL COLD-FORMED STEEL FRAMING SHALL BE BRACED AS RE□UIRED BY SECTION D3 OF THE AISI SPECIFICATION.
5. SUBMIT COLD-FORMED STEEL FRAMING SHOP DRAWINGS AND SPECIFICATIONS TO THE SEOR FOR REVIEW PRIOR TO FABRICATION.
6. COLD-FORMED STEEL STUDS AND TRACKS ARE TO BE ATTACHED WITH SHEET METAL SCREWS (SMS) WITH SIZES CALLED OUT ON THE DETAILS. PENETRATION OF SCREWS THROUGH JOINED MATERIAL SHOULD NOT BE LESS THAN 3 EXPOSED THREADS. SCREWS ARE TO BE INSTALLED AND TIGHTENED IN ACCORDANCE WITH SCREW MANUFACTURER'S RECOMMENDATIONS.

CONCRETE MASONRY NOTES:

1. CONCRETE MASONRY UNITS (CMU) SHALL DEVELOP THE FOLLOWING MINIMUM 28 DAY PRISM COMPRESSIVE STRENGTHS IN ACCORDANCE WITH THE BUILDING CODE:

MINIMUM 28 DAY COMPRESSIVE STRENGTH			
LOCATION	□□	TYPE S MORTAR PER ASTM C270	GROUT PER CBC 2103A.13
CMU U.N.O.	2500 □si	2500 □si	2500 □si

2. CONCRETE BLOCK SHALL CONFORM TO ASTM C90 MEDIUM WEIGHT. USE OF LIGHT WEIGHT BLOCK RE□UIRES PRIOR WRITTEN APPROVAL BY THE SEOR.
3. PRISM TEST SHALL BE PERFORMED FOR CMU WITH □□ OVER 2000 PSI FOR CBC 2105A.2
4. VERTICAL REINFORCING SHALL BE FULL HEIGHT OF WALL AND SHALL BE BRACED AT 6□8" MAXIMUM TO PREVENT MOVEMENT WHILE GROUTING.
5. HORIZONTAL REINFORCING SHALL BE IN BOND BEAM UNITS AND TIED SECURELY TO VERTICAL REINFORCING.
6. DOWELS, ANCHORS, AND OTHER EMBEDDED ITEMS SHALL BE TIED SECURELY IN PLACE TO PREVENT MOVEMENT WHILE GROUTING. WET SETTING OR STABBING IS NOT ALLOWED.
7. MAXIMUM GROUT LIFTS SHALL NOT EXCEED 8□0" AND CLEANOUTS AT THE BOTTOM OF ALL CELLS SHALL BE USED UNLESS THE LIFT IS 4□0" OR LESS. THE CLEANOUTS SHALL BE SEALED BEFORE GROUTING. GROUT FOR EACH POUR SHALL BE STOPPED 1 1/2" BELOW THE TOP OF A BLOCK COURSE EXCEPT AT THE FINAL COURSE. ALL GROUT SHALL BE THOROUGHLY CONSOLIDATED BY VIBRATING IMMEDIATELY AFTER PLACING. SHAKING OR RODDING REBAR IS NOT ALLOWED. FILL ALL CELLS WITH GROUT.
8. BLOCK SHALL BE PLACED IN RUNNING BOND AND SHALL BE 8":8":16" NOMINAL UNITS, UNO. WHERE BLOCK IS RE□UIRED TO BE PLACED IN STACK BOND (SEE ARCH), OPEN-ENDED UNITS (I.E., "SPEED BLOCK") SHALL BE USED.
9. THE CONTRACTOR IS RESPONSIBLE FOR DETERMINING THE SAFETY OF LIFT HEIGHT FOR OPEN ENDED OR FIELD MODIFIED BLOCKS.
10. LAYOUT OF MASONRY BLOCK UNITS SHALL BE RUNNING BOND, U.N.O. BLOCK MODULES/MORTAR JOINTS SHOWN ON THESE DRAWINGS ARE FOR PRESENTATION PURPOSES ONLY, AND NOT INTENDED TO SUPERCEDE ARCHITECTURAL DESIGN RE□UIREMENTS.
11. CMU WALL REINFORCEMENT SEE PLANS & ELEVATIONS
12. PROVIDE VERTICAL CONTROL JOINTS IN CMU WALLS AS SHOWN ON PLAN. UNLESS NOTED OTHERWISE VERTICAL CONTROL JOINTS SHALL OCCUR AT 25□0" OC MAXIMUM ALONG WALL LENGTH, AT FOUNDATION STEPS, FLOOR OR ROOF JOINTS, WALL HEIGHT CHANGES, AND 24" MINIMUM PAST ONE SIDE OF OPENINGS □6□0" WIDE, UNO ON PLANS.
13. WHEN THE AMBIENT TEMPERATURE FALLS BELOW 40°F, OR EXCEEDS 100°F, PROVISIONS OF TMS602 / ACI 530 / ASCE6. ARTICLE 1.8C OR ARTICLE 1.8D SHALL BE IMPLEMENTED.

ADDITIONAL NOTES PER LADBS:

1. CONTRACTORS RESPONSIBLE FOR THE CONSTRUCTION OF A WIND OR SEISMIC FORCE RESISTING SYSTEM/COMPONENT LISTED IN THE "STATEMENT OF SPECIAL INSPECTION" SHALL SUBMIT A WRITTEN STATEMENT OF RESPONSIBILITY TO THE LABOS INSPECTORS AND THE OWNER PRIOR TO THE COMMENCEMENT OF WORK ON SUCH SYSTEM OR COMPONENT PER SEC 1709.1.
2. CONTINUOUS SPECIAL INSPECTION BY A REGISTERED DEPUTY INSPECTOR IS RE□UIRED FOR FIELD WELDING, CONCRETE STRENGTH F'C □2500 PSI, HIGH STRENGTH BOLTING, SPRAYED-ON FIREPROOFING, ENGINEERED MASONRY, HIGH-LIFT GROUTING, PRE-STRESSED CONCRETE, HIGH LOAD DIAPHRAGMS AND SPECIAL MOMENT-RESISTING CONCRETE FRAMES.
3. FOUNDATION SILLS SHALL BE NATURALLY DURABLE OR PRESERVATIVE-TREATED WOOD.
4. A COPY OF THE LOS ANGELES RESEARCH REPORT AND/OR CONDITIONS OF LISTING SHALL BE MADE AVAILABLE AT THE JOB SITE.
5. POWER-DRIVEN FASTENERS SHALL NOT BE USED TO ANCHOR SILL PLATES EXCEPT AT INTERIOR NONBEARING WALLS NOT DESIGNED AS SHEAR WALLS.
6. EXTERIOR ANCHOR BOLTS AND POST BASES SHALL BE GALVANIZED AND EACH ANCHOR BOLTS SHALL HAVE AT LEAST TWO GALVANIZED NUTS ABOVE THE BASE PLATE.
7. THE TOP OF EXTERIOR PEDESTALS MUST BE SLOPED FOR POSITIVE DRAINAGE.
8. ALL MAIN FOOTING AND GRADE BEAM REINFORCEMENT STEEL SHALL BE BENT INTO THE INTERSECTING FOOTING AND FULLY DEVELOPED AROUND EACH CORNER AND INTERSECTION.
9. CONTINUOUS INSPECTION BY A LOS ANGELES CITY LICENSED DEPUTY INSPECTOR IS RE□UIRED FOR ALL STRUCTURAL CONNECTIONS, FOOTINGS, GRADE BEAMS AND RETAINING WALLS DURING INSTALLATION.
10. STRUCTURAL OBSERVATION BY THE ENGINEER OR ARCHITECT OF RECORD IS RE□UIRED IN ACCORDANCE WITH LA INFORMATION BULLETIN P/BC 2008-024.
11. FIELD WELDING TO BE DONE BY WELDERS CERTIFIED BY LADBS FOR STRUCTURAL STEEL, REINFORCING STEEL & LIGHT GAUGE STEEL. CONTINUOUS INSPECTION BY A DEPUTY INSPECTOR IS RE□UIRED.
12. SHOP WELDS MUST BE PERFORMED IN A LICENSED LADBS FABRICATOR'S SHOP.
13. LADBS LICENSED FABRICATOR IS RE□UIRED FOR STRUCTURAL STEEL.
14. GLUE-LAMINATED TIMBERS MUST BE FABRICATED IN A LADBS LICENSED SHOP. IDENTIFY GRADE SYMBOL AND LAMINATION SPECIES PER 2015 NDS SUPPLEMENT TABLE 5A.
15. ROOF DIAPHRAGM NAILING TO BE INSPECTED BEFORE COVERING. FACE GRAIN OF PLYWOOD SHALL BE PERPENDICULAR TO SUPPORTS. FLOOR SHALL HAVE TONGUE AND GROOVE OR BLOCKED PANEL EDGES. PLYWOOD SPANS SHALL CONFORM WITH TABLE 2304.8(1).
16. ALL DIAPHRAGM AND SHEAR WALL NAILING SHALL UTILIZE COMMON NAILS OR GALVANIZED BOX.
17. ALL BOLT HOLES SHALL BE DRILLED 1/32□TO 1/16" OVERSIZED.
18. CONSTRUCTION SHALL COMPLY WITH PART 3 OF TMS 602-13/ACI 530.1-13/ASCE 6-13.
   A. REINFORCEMENT SHALL BE SUPPORTED TO PREVENT DISPLACEMENTS BEYOND THE TOLERANCES PRIOR TO GROUTING. (3.4B OF TMS 602-13/ACI 530.1-13/ASCE 6-13)
   B. CLEANOUTS SHALL BE PROVIDED FOR ALL GROUT POURS OVER 5□4". (3.2 F OF TMS 602-13/ACI 530.1-13/ASCE 6-13)
   C. GROUT LIFT HEIGHT SHALL NOT EXCEED 12□8" WHEN THE MASONRY HAS CURED FOR 4-HRS., THE GROUT SLUMP IS MAINTAINED BETWEEN 10 AND 11IN., AND NO INTERMEDIATE REINFORCED BOND BEAMS ARE PLACED BETWEEN THE TOP AND BOTTOM OF THE POUR HEIGHT. OTHERWISE GROUT LIFT HEIGHT SHALL NOT EXCEED 5□4". (3.5 D OF TMS 602-13/ACI 530.1-13/ASCE 6-13)
   D. ALL CELLS AND SPACED CONTAINING REINFORCEMENT SHALL BE FILLED WITH GROUT.
19. PIPES AND CONDUITS EMBEDDED IN MASONRY SHALL NOT REDUCE THE RE□UIRED STRENGTH. (3.2.2)
20. JOINT REINFORCEMENT USED IN MASONRY EXPOSED TO EARTH OR WEATHER SHALL BE STAINLESS STEEL OR PROTECTED FROM CORROSION BY MILL GALVINAZED, HOT-DIP GALVANIZED, OR EPOXY COATING. (6.4.2 AND 6.4.3)

POST INSTALLED ANCHORS:

1. ANCHOR DIAMETER REFERS TO THE THREAD SIZE FOR THE WEDGE & SHELL CATEGORIES AND TO THE ANCHOR OUTSIDE DIAMETER FOR THE SLEEVE CATEGORY.
2. APPLY PROOF TEST LOADS TO WEDGE & SLEEVE ANCHORS WITHOUT REMOVING THE NUT IF POSSIBLE. IF NOT, REMOVE NUT & INSTALL A THREADED COUPLER TO THE SAME TIGHTNESS OF THE ORIGINAL NUT USING A TOR□UE WRENCH & APPLY LOAD.
3. FOR SLEEVE/SHELL INTERNALLY THREADED CATEGORIES, VERIFY THAT THE ANCHOR IS NOT PREVENTED FROM WITHDRAWING BY A BASEPLATE OR OTHER FIXTURES. IF RESTRAINT IS FOUND, LOOSEN AND SHIM OR REMOVE FIXTURE(S) PRIOR TO TESTING.
4. REACTION LOADS FROM TEST FIXTURES MAY BE APPLIED CLOSE TO THE ANCHOR BEING TESTED, PROVIDED THE ANCHOR IS NOT RESTRAINED FROM WITHDRAWING BY THE FIXTURE(S).
5. SHELL TYPE ANCHORS MUST BE TESTED AS FOLLOWS:
   VISUALLY INSPECT 25□ FOR FULL EXPANSION AS EVIDENCED BY THE LOCATION OF THE EXPANSION PLUG IN THE ANCHOR BODY. PLUG LOCATION OF A FULLY EXPANDED ANCHOR SHOULD BE AS RECOMMENDED BY THE MANUFACTURER, OR, IN THE ABSENCE OF SUCH RECOMMENDATION, AS DETERMINED ON THE JOB SITE FOLLOWING THE MANUFACTURER'S INSTALLATION INSTRUCTIONS, AND□PROOF LOAD 5□ AS INDICATED IN THE TABLE ABOVE, BUT NOT LESS THAN THREE ANCHORS PER DAY FOR EACH DIFFERENT PERSON OR CREW INSTALLING ANCHORS, OR□TEST 50□ OF THE INSTALLED ANCHORS PER 2624(d).
6. TEST E□UIPMENT IS TO BE CALIBATED BY AN APPROVED TESTING LABORATORY IN ACCORDANCE WITH STANDARD RECOGNIZED PROCEDURES.
7. TOR□UE TEST VALUES FOR SHELL TYPE ANCHORS ARE OMMITTED DUE TO LACK OF DATA. TOR□UE TESTING CAN OCCUR ON AN INDIVIDUAL BASIS WHEN TEST PROCEDURES ARE SUBMITTED AND APPROVED BY THE ENFORCEMENT AGENCY. TABULATED VALUES MAY BE FORTHCOMING ONCE THE ENFORCEMENT AGENCY HAS MORE DATA TO EVALUATE THE FEASIBLITY OF STANDARD TOR□UE VALUES.
8. THE FOLLOWING CRITERIA APPLY FOR THE ACCEPTANCE OF INSTALLED ANCHORS:
   A. HYDRAULIC RAM METHOD: THE ANCHOR SHOULD HAVE NO OBSERVABLE MOVEMENT AT THE APPLCABLE TEST LOAD. FOR WEDGE AND SLEEVE TYPE ANCHORS, A PRACTICAL WAY TO DETERMINE OBSERVABLE MOVEMENT IS THAT THE WASHER UNDER THE NUT BECOMES LOOSE.
   B. TOR□UE WRENCH METHOD: THE APPLICABLE TEST TOR□UE MUST BE REACHED WITHIN THE FOLLOWING LIMITS:
      WEDGE OR SLEEVE TYPE: ONE-HALF (1/2) TURN OF THE NUT.
      3/8 IN. SLEEVE ANCHOR ONLY: ONE-□UARTER (1/4) TURN OF THE NUT.
9. TESTING SHOULD OCCUR 24 HOURS MINIMUM AFTER INSTALLATION OF THE SUBJECT ANCHORS.
10. WHEN INSTALLING DRILLED-IN ANCHORS AND/OR POWDER DRIVEN PINS IN EXISTING NON-PRESTRESSED REINFORCED CONCRETE, USE CARE AND CAUTION TO AVOID CUTTING OR DAMAGING THE EXISTING REINFORCING BARS. WHEN INSTALLING THEM INTO EXISTING PRESTRESSED CONCRETE (PRE- OR POST- TENSIONED) LOCATE THE PRESTRESSED TENDONS BY USING A NON-DESTRUCTIVE METHOD PRIOR TO INSTALLATION. EXERCISE EXTREME CARE AND CAUTION TO AVOID CUTTING OR DAMAGING THE TENDONS DURING INSTALLATION. MAINTAIN A MINIMUM CLEARANCE OF ONE INCH BETWEEN THE REINFORCEMENT AND THE DRILLED-IN ANCHOR AND/OR PIN.
11. ALL TESTS SHALL BE PERFORMED IN THE PRESENCE OF THE SPECIAL INSPECTOR/INSPECTOR OF RECORD.
12. TEST LOADS:

HARDROCK OR LIGHTWEIGHT CONCRETE						
ANCHOR	WEDGE		SLEEVE		SHELL	
DIA (IN)	LOAD (LBS)	TOR□UE (FT-LBS)	LOAD (LBS)	TOR□UE (FT-LBS)	LOAD (LBS)	TOR□UE (FT-LBS)
1/4	800	10	400	4	1000	-
5/16	-	-	400	5	1400	-
3/8	1100	25	700	10	1800	-
1/2	2000	50	900	20	2700	-
5/8	2300	80	1100	45	3700	-
3/4	3700	150	1400	90	5400	-
1	5800	250	-	-	-	-

CONTRACTOR RESPONSIBILITY NOTE:

GENERAL:
1. EACH CONTRACTOR RESPONSIBLE FOR THE CONSTRUCTION OF A MAIN LATERAL-FORCE-RESISTING SYSTEM, DESIGNATED ON PLANS SHALL SUBMIT A WRITTEN STATEMENT OF RESPONSIBILITY TO DSA AND THE OWNER PRIOR TO THE COMMENCEMENT OF WORK ON THE SYSTEM OR COMPONENT. THE CONTRACTOR'S STATEMENT OF RESPONSIBILITY SHALL CONTAIN THE FOLLOWING:
   A. ACKNOWLEDGMENT OF AWARENESS OF THE SPECIAL RE□UIREMENTS.
   B. ACKNOWLEDGMENT THAT CONTROL WILL BE EXERCISED TO OBTAIN CONFORMANCE WITH THE CONSTRUCTION DOCUMENTS APPROVED BY THE BUILDING OFFICIAL.
   C. PROCEDURES FOR EXERCISING CONTROL WITHIN THE CONTRACTOR'S ORGANIZATION, THE METHOD AND FRE□UENCY OF REPORTING AND THE DISTRIBUTION OF THE REPORTS.
   D. IDENTIFICATION AND □UALIFICATIONS OF THE PERSON(S) EXERCISING SUCH CONTROL AND THEIR POSITION(S) IN THE ORGANIZATION.

BUREAU OF ENGINEERING
OFFICIAL RECORD

TYPICAL ABBREVIATIONS

AB	ANCHOR BOLT	INT	INTERIOR
ABV	ABOVE	JST	JOIST
ADDT'L	ADDITIONAL	KLF	KIPS PER LINEAR FOOT
ADJ	ADJACENT	KSL	KIPS PER S□UARE FOOT
AFF	ABOVE FINISH FLOOR	KSI	KIPS PER S□UARE INCH
ALT	ALTERNATE	L	ANGLE
ARCH	ARCHITECT(URAL)	LFRS	LATERAL FORCE RESISTING SYSTEM
BLDG	BUILDING	LLH	LONG LEG HORIZONTAL
BLKG	BLOCKING	LLV	LONG LEG VERTICAL
BLW	BELOW	LP	LOW POINT
BM	BEAM	LWC	LIGHTWEIGHT CONCRETE
BN	BOUNDARY NAILING	MAX	MAXIMUM
B.O.	BOTTOM OF	MB	MACHINE BOLT
BOTT	BOTTOM	MECH	MECHANICAL
BRG	BEARING	MFR	MANUFACTURER
BS	BOTH SIDES	MIN	MINIMUM
BTWN	BETWEEN	MTL	METAL
C	CAMBER	(N)	NEW
CIP	CAST IN PLACE	NS	NEAR SIDE OR NON-SHRINK
CJ	CONTROL/ CONSTRUCTION JOINT	NTS	NOT TO SCALE
CL	CENTERLINE	NWC	NORMAL WEIGHT CONCRETE
CLR	CLEAR	OC	ON CENTER
CMU	CONCRETE MASONRY UNIT	O.F.	OUTSIDE FACE
COL	COLUMN	OH	OPPOSITE HAND
CONC	CONCRETE	OPNG	OPENING
CONN	CONNECTION	PDF	POWDER DRIVEN FASTENER
CONT	CONTINUOUS	PJ	PANEL JOIST
CP	COMPLETE PENETRATION	PL	PLATE
CSK	COUNTERSINK	PLC(S)	PLACE(S)
CTR(D)	CENTER(ED)	PLF	POUND PER LINEAR FOOT
D_B	BAR OR BOLT DIAMETER	PSI	POUND PER S□UARE INCH
DBL	DOUBLE	PT	PRESSURE TREATED OR POST TENSION
DEMO	DEMOLITION	□TY	□UANTITY
DET	DETAIL	RAD, R	RADIUS
DIA	DIAMETER	REF	REFERENCE
DIAG	DIAGONAL	REINF	REINFORCING
DIM	DIMENSION	RE□D	RE□UIRED
DO	DITTO	SB	SILL BOLT
DWG	DRAWING	SC	SAW CUT OR SLIP CRITICAL
(E)	EXISTING	SCHED	SCHEDULE
EA	EACH	SEOR	STRUCTURAL ENGINEER ON RECORD
EF	EACH FACE	SHTG	SHEATHING
EJ	EXPANSION JOINT	SIM	SIMILAR
EMBED	EMBEDMENT	SMS	SHEET METAL SCREW
ELEC	ELECTRICAL	SN	SILL NAIL
ELEV	ELEVATION	SOG	SLAB ON GRADE
EN	EDGE NAILING	S□	S□UARE
E.O.	EDGE OF	SS	STAINLESS STEEL
EOR	ENGINEER OF RECORD	STD	STANDARD
E□	E□UAL	STGRD	STAGGERED
E□UIP	E□UIPMENT	STIFF	STIFFENER
ES	EACH SIDE OR EDGE	STL	STEEL
	SCREW	STRUCT	STRUCTURAL
EW	EACH WAY	T&B	TOP AND BOTTOM
EXP	EXPANSION	THK	THICK
EXT	EXTERIOR	T.O.	TOP OF
FIN	FINISH	TOM	TOP OF MASONRY
FLR	FLOOR	TOS	TOP OF STEEL
FN	FIELD NAILING	TYP	TYPICAL
FND	FOUNDATION	UNO	UNLESS NOTED OTHERWISE
F.O.	FACE OF	VERT	VERTICAL
FS	FAR SIDE OR FIELD SCREW	W/	WITH
FRMG	FRAMING	W/O	WITHOUT
FT	FOOT OR FEET	WF	WIDE FLANGE
FTG	FOOTING	WLD	WELDED
G	GIRDER	WO	WHERE OCCURS
GA	GAGE	WP	WORK POINT
GALV	GALVANIZED	WT	WEIGHT
HAB	HEADED ANCHOR BOLT	WWF	WELDED WIRE FABRIC
HD	HOLDDOWN		
HDR	HEADER		
HGR	HANGER		
HK	HOOK		
HORIZ	HORIZONTAL		
HP	HIGH POINT		
HS	HIGH STRENGTH		
HSS	HOLLOW STRUCTURAL STEEL		
HT	HEIGHT		
IN	INCH		

VCA ENGINEERS, INC.
CIVIL • STRUCTURAL • MECHANICAL
2151 Michelson Dr. #240
Irvine, CA 92612
Tel. 949.679.0870
Fax. 949.679.3370
Project No. D312

ENGINEERING
CITY OF LOS ANGELES

DEPARTMENT OF PUBLIC WORKS
BUREAU OF ENGINEERING

NO.	REVISION DESCRIPTION	DATE	BY

BUILDING NO. -
INDEX NO. RP-300118

REGISTERED PROFESSIONAL ENGINEER
DOUGLAS KEUN YOUNG
No. S4029
EXP. 9/30/20
STRUCTURAL
STATE OF CALIFORNIA

GARY LEE MOORE, PE, ENV SP
CITY ENGINEER
ARCHITECTURAL DIVISION

ARCHITECT/ENGINEER:	JHON SPARANO LIC. NO.: LICENSE
DESIGNED BY:	SPARANO □MOONEY ARCHITECTURE
DRAWN BY:	ALEX, □
CHECKED BY:	YOUNG, NAM
APPROVED BY:	

BID SET
PROJECT ISSUE DATE: 06/22/21
CITY OF LOS ANGELES

V

STATEMENT OF SPECIAL INSPECTIONS:

1. THE OWNER SHALL EMPLOY ONE OR MORE SPECIAL INSPECTORS TO PROVIDE INSPECTIONS DURING CONSTRUCTION. THE SPECIAL INSPECTOR SHALL BE A □UALIFIED PERSON WHO SHALL DEMONSTRATE COMPETENCE, TO THE SATISFACTION OF THE BUILDING OFFICIAL, FOR INSPECTION OF THE PARTICULAR TYPE OF CONSTRUCTION OR OPERATION RE□UIRING SPECIAL INSPECTION.
2. SPECIAL INSPECTIONS ARE NOT RE□UIRED WHERE THE WORK IS DONE ON THE PREMISES OF A FABRICATOR REGISTERED AND APPROVED TO PERFORM SUCH WORK WITHOUT SPECIAL INSPECTION. APPROVED FABRICATORS MUST SUBMIT A CERTIFICATE OF COMPLIANCE FOR OFFSITE FABRICATIONS SUCH AS STRUCTURAL STEEL, PRECAST CONCRETE, ETC.
3. ALL INSPECTIONS SHALL BE PERFORMED BY INDEPENDENT SPECIAL INSPECTORS. JOB SITE VISITS BY THE STRUCTURAL ENGINEER OR BUILDING OFFICIAL DO NOT CONSTITUTE AND ARE NOT A SUBSTITUTE FOR INSPECTIONS BY A SPECIAL INSPECTOR.
4. ALL INSPECTION REPORTS SHALL BE SUBMITTED TO THE BUILDING OFFICIAL AND SEOR. THE FINAL REPORTS BY THE SPECIAL INSPECTOR(S) MUST CERTIFY THAT THE ENTIRE STRUCTURAL SYSTEM COMPLIES WITH THE APPROVED PLANS AND SPECIFICATIONS.
5. IT IS SOLELY THE CONTRACTOR'S RESPONSIBILITY TO SEE THAT THESE INSPECTIONS ARE PERFORMED.
6. WORK RE□UIRING SPECIAL INSPECTION SHALL BE INSPECTED BY THE SPECIAL INSPECTOR WHO IS PRESENT IN THE AREA WHERE THE WORK IS PERFORMED AND AT THE COMPLETION OF WORK. CONTINUOUS INSPECTION CONSISTS OF FULL-TIME INSPECTION□PERIODIC INSPECTION CONSISTS OF PART-TIME OR INTERMITTENT INSPECTION.
7. THE FOLLOWING SPECIAL INSPECTIONS ARE IN ADDITION TO INSPECTIONS BY THE BUILDING OFFICIAL. THIS LIST IS NOT INTENDED TO BE ALL INCLUSIVE.

TABLE 1705.2.1

RE□UIRED VERIFICATION AND INSPECTION OF STEEL CONSTRUCTION

VERIFICATION AND INSPECTION	CONTINUOUS	PERIODIC	REFERENCED STANDARD[a]	CBC REFERENCE
1. MATERIAL VERIFICATION OF HIGH-STRENGTH BOLTS, NUTS AND WASHERS:				
A. IDENTIFICATION MARKINGS TO CONFORM TO ASTM STANDARDS SPECIFIED IN THE APPROVED CONSTRUCTION DOCUMENTS.	-	X	AISC 360, SECTION A3.3 AND APPLICABLE ASTM MATERIAL STANDARDS	-
B. MANUFACTURER'S CERTIFICATE OF COMPLIANCE RE□UIRED.	-	X	-	-
2. INSPECTION OF HIGH-STRENGTH BOLTING:				
A. SNUG-TIGHT JOINTS.	-	X	AISC 360, SECTION M2.5	-
B. PRETENSIONED AND SLIP-CRITICAL JOINTS USING TURN-OF-NUT WITH MATCH MARKING, TWIST-OFF BOLT OR DIRECT TENSION INDICATOR METHODS OF INSTALLATION.	-	X		
C. PRETENSIONED AND SLIP-CRITICAL JOINTS USING TURN-OF-NUT WITHOUT MATCH MARKING OR CALIBRATED WRENCH METHODS OF INSTALLATION.	X	-		
3. MATERIAL VERIFICATION OF STRUCTURAL STEEL AND COLD-FORMED STEEL DECK:				
A. FOR STRUCTURAL STEEL, IDENTIFICATION MARKINGS TO CONFORM TO AISC 360.	-	X	AISC 360, SECTION A3.1	2203.1
B. FOR OTHER STEEL. IDENTIFICATION MARKINGS TO CONFORM TO ASTM STANDARDS SPECIFIED IN THE APPROVED CONSTRUCTION DOCUMENTS.	-	X	APPLICABLE ASTM MATERIAL STANDARDS	-
C. MANUFACTURER'S CERTIFIED TEST REPORTS.	-	X	-	-
4. MATERIAL VERIFICATION OF WELD FILLER MATERIALS:				
A. IDENTIFICATION MARKINGS TO CONFORM TO AWS SPECIFICATION IN THE APPROVED CONSTRUCTION DOCUMENTS.	-	X	AISC 360, SECTION A3.5 AND APPLICABLE AWS A5 DOCUMENTS	-
B. MANUFACTURER'S CERTIFICATE OF COMPLIANCE RE□UIRED.	-	X	-	-
5. INSPECTION OF WELDING:				
A. STRUCTURAL STEEL AND COLD-FORMED STEEL DECK:				
1) COMPLETE AND PARTIAL JOINT PENETRATION GROOVE WELDS.	X	-	AWS D1.1, AWS D1.8	1705.2.1
2) MULTIPASS FILLET WELDS.	X	-		
3) SINGLE-PASS FILLET WELDS □5/16"	X	-		
4) PLUG AND SLOT WELDS.	X	-		
5) SINGLE-PASS FILLET WELDS □5/16"	-	X		
6) FLOOR AND ROOF DECK WELDS.	-	X	AWS D1.3	-
B. REINFORCING STEEL.				
1) VERIFICATION OF WELDABILITY OF REINFORCING STEEL OTHER THAN ASTM A 706.	-	X	AWS D1.4, ACI318: SECTION 26.6.4.1, 18.2.8, 25.5.7.4	-
2) REINFORCING STEEL RESISTING FLEXURAL AND AXIAL FORCES IN INTERMEDIATE AND SPECIAL MOMENT FRAMES, AND BOUNDARY ELEMENTS OF SPECIAL STRUCTURAL WALLS OF CONCRETE AND SHEAR REINFORCEMENT.	X	-		
3) SHEAR REINFORCEMENT.	X	-		
4) OTHER REINFORCING STEEL.	-	X		
6. INSPECTION OF STEEL FRAME JOINT DETAILS FOR COMPLIANCE.				
A. DETAILS SUCH AS BRACING AND STIFFENING.	-	X	-	1705.2.1
B. MEMBER LOCATIONS.	-	X		
C. APPLICATION OF JOINT DETAILS AT EACH CONNECTION.	-	X		

FOR SI: 1 INCH □25.4 MM
a. WHERE APPLICABLE, SEE ALSO SECTION 1705.12, SPECIAL INSPECTIONS FOR SEISMIC RESISTANCE.

TABLE 1705.3

RE□UIRED VERIFICATION AND INSPECTION OF CONCRETE CONSTRUCTION

VERIFICATION AND INSPECTION	CONTINUOUS	PERIODIC	REFERENCED STANDARD[a]	CBC REFERENCE
1. INSPECT REINFORCEMENT, INCLUDING PRESTRESSING TENDONS, AND VERIFY PLACEMENT	-	X	ACI 318 CH. 20, 25.2, 25.3, 26.5.1-26.5.3	1908.4
2. REINFORCING BAR WELDING: a. VERIFY WELDABILITY OF REINFORCING BARS OTHER THAN ASTM A706□	-	X	AWS D1.4 ACI 318: 3.5.2	-
□. INSPECT SINGLE-PASS FILLET WELDS, MAXIMUM 5/16"□		X		
□. INSPECT ALL OTHER WELDS.	X			
3. INSPECT ANCHORS CAST IN CONCRETE.	-	X	ACI 318: 17.8.2	-
4. INSPECT ANCHORS POST-INSTALLED IN HARDENED CONCRETE MEMBERS. a. ADHESIVE ANCHORS INSTALLED IN HORIZONTALLY OR UPWARDLY INCLINED ORIENTATIONS TO RESIST SUSTAINED TENSION LOADS.	X		ACI 318: 17.8.2.4	-
□. MECHANICAL ANCHORS AND ADHESIVE ANCHORS NOT DEFINED IN 4.a		X	ACI 318: 17.8.2	
5. VERIFY USE OF RE□UIRED DESIGN MIX.	-	X	ACI 318: CH 19, 26.4.3, 26.4.4	1904.1, 1904.2, 1908.2, 1908.3
6. PRIOR TO CONCRETE PLACEMENT, FRABRICATE SPECIMENS FOR STRENGTH TESTS, PERFORM SLUMP AND AIR CONTENT TEST, AND DETERMINE THE TEMPERATURE OF THE CONCRETE.	X	-	ASTM C172 ASTM C31 ACI 318: 26.4.5, 26.12	1908.10
7. INSPECTION OF CONCRETE AND SHOTCRETE PLACEMENT FOR PROPER APPLICATION TECHNI□UES.	X	-	ACI 318: 26.4.5	1908.6, 1908.7, 1908.8
8. VERIFY MAINTENANCE OF SPECIFIED CURING TEMPERATURE AND TECHNI□UES.	-	X	ACI 318: 26.4.7-26.4.9	1908.9
9. INSPECTION OF PRESTRESSED CONCRETE:				
A. APPLICATION OF PRESTRESSING FORCES.	X	-	ACI 318: 26.9.2.1	-
B. GROUTING OF BONDED PRESTRESSING TENDONS	X	-	ACI 318: 26.9.2.3	-
10. INSPECT ERECTION OF PRECAST CONCRETE MEMBERS.	-	X	ACI 318: CH. 26.8	-
11. VERIFY IN-SITU CONCRETE STRENGTH, PRIOR TO STRESSING OF TENDONS IN POST-TENSIONED CONCRETE AND PRIOR TO REMOVAL OF SHORES AND FORMS FROM BEAMS AND STRUCTURAL SLABS.	-	X	ACI 318: 26.10.2	-
12. INSPECT FORMWORK FOR SHAPE, LOCATION AND DIMENSIONS OF THE CONCRETE MEMBER BEING FORMED.	-	X	ACI 318: 26.10.1(□)	-

FOR SI: 1 INCH □25.4 MM
a. WHERE APPLICABLE, SEE ALSO SECTION 1705.12, SPECIAL INSPECTIONS FOR SEISMIC RESISTANCE.
□. SPECIFIC RE□UIREMENTS FOR SPECIAL INSPECTIONS SHALL BE INCLUDED IN THE RESEARCH REPORT FOR THE ANCHOR ISSUED BY AN APPROVED SOURCE IN ACCORDANCE WITH 17.8.2 ACI 318, OR OTHER □UALIFICATION PROCEDURES. WHERE SPECIFIC RE□UIREMENTS ARE NOT PROVIDED, SPECIAL INSPECTION RE□UIREMENTS SHALL BE SPECIFIED BY THE REGISTERED DESIGN PROFESSIONAL AND SHALL BE APPROVED BY THE BUILDING OFFICIAL PRIOR TO THE COMMENCEMENT OF THE WORK.

TABLE 1705.6

RE□UIRED VERIFICATION AND INSPECTION OF SOILS

VERIFICATION AND INSPECTION TASK	CONTINUOUS DURING TASK LISTED	PERIODICALLY DURING TASK LISTED
1. VERIFY MATERIALS BELOW SHALLOW FOUNDATIONS ARE ADE□UATE TO ACHIEVE THE DESIGN BEARING CAPACITY.	-	X
2. VERIFY EXCAVATIONS ARE EXTENDED TO PROPER DEPTH AND HAVE REACHED PROPER MATERIAL.	-	X
3. PERFORM CLASSIFICATION AND TESTING OF COMPACTED FILL MATERIALS.	-	X
4. VERIFY USE OF PROPER MATERIALS, DENSITIES AND LIFT THICKNESSES DURING PLACEMENT AND COMPACTION OF COMPACTED FILL.	X	-
5. PRIOR TO PLACEMENT OF COMPACTED FILL, OBSERVE SUBGRADE AND VERIFY THAT SITE HAS BEE N PREPARED PROPERLY.	-	X

TABLE 1705A.7

RE□UIRED VERIFICATION AND INSPECTION OF DRIVEN DEEP FOUNDATION ELEMENTS

VERIFICATION AND INSPECTION TASK	CONTINUOUS DURING TASK LISTED	PERIODICALLY DURING TASK LISTED
1. VERIFY ELEMENT MATERIALS, SIZES AND LENGTHS COMPLY WITH THE RE□UIREMENTS.	X	-
2. DETERMINE CAPACITIES OF TEST ELEMENTS AND CONDUCT ADDITIONAL LOAD TESTS, AS RE□UIRED.	X	-
3. OBSERVE DRIVING OPERATIONS AND MAINTAIN COMPLETE AND ACCURATE RECORDS FOR EACH ELEMENT.	X	-
4. VERIFY PLACEMENT LOCATIONS AND PLUMBNESS, CONFIRM TYPE AND SIZE OF HAMMER, RECORD NUMBER OF BLOWS PER FOOT OF PENETRATION, DETERMINE RE□UIRED PENETRATIONS TO ACHIEVE DESIGN CAPACITY, RECORD TIP AND BUTT ELEVATIONS AND DOCUMENT ANY DAMAGE TO FOUNDATION ELEMENT.	X	-
5. FOR STEEL ELEMENTS, PERFORM ADDITIONAL INSPECTIONS IN ACCORDANCE WITH SECT ION 1704A.3.	-	-
6. FOR CONCRETE ELEMENTS AND CONCRETE-FILLED ELEMENTS, PERFORM ADDITIONAL INSPECTIONS IN ACCORDANCE WITH SECTION 1704AA.	-	-
7. FOR SPECIALTY ELEMENTS, PERFORM ADDITIONAL INSPECTIONS AS DETERMINED BY THE REGISTERED DESIGN PROFESSIONAL IN RESPONSIBLE CHARGE.	-	-

VCA ENGINEERS, INC.
CIVIL • STRUCTURAL • TRAFFIC
2151 Michelson Dr. #240
Irvine, CA 92612
Tel. 949.679.0870
Fax. 949.679.9370
Project No. D312

BUREAU OF ENGINEERING
OFFICIAL RECORD

DEPARTMENT OF PUBLIC WORKS
CITY OF LOS ANGELES
BUREAU OF ENGINEERING
ENGINEERING
CITY OF LOS ANGELES

NO.	REVISION DESCRIPTION	DATE	BY

INDEX NO. RP-300118
BUILDING NO. -

REGISTERED PROFESSIONAL ENGINEER GARY LEE MOORE No. S4029 EXP. 9/30/20 CIVIL STATE OF CALIFORNIA

GARY LEE MOORE, PE, ENV SP
ARCHITECTURAL DIVISION
CITY ENGINEER

	DATE:
ARCHITECT/ENGINEER: JHON SPARANO LIC. NO.: LICENSE	11/01/18
DESIGNED BY: SPARANO □MOONEY ARCHITECTURE	11/01/18
DRAWN BY: ALEX. □	11/01/18
CHECKED BY: YOUNG, NAM	11/01/18
APPROVED BY:	11/01/18

BID SET
PROJECT ISSUE DATE: 06/22/21

VERTICAL CONTROL:
HORIZONTAL CONTROL:

SHEET TITLE: GENERAL NOTES

PROJECT: GRANADA HILLS POOL AND BATH HOUSEREPLACEMENT PROJECT

ADDRESS: 16730 CHATSWORTH STREETGRANADA HILLS, CA 91344

WORK ORDER NO. #E170517
PLAN FILE NO.
DRAWING NO. S0.03
SHEET OF SHEETS

THE CITY OF LOS ANGELES OR ITS OFFICERS OR AGENTS SHALL NOT BE RESPONSIBLE FOR THE ACCURACY OR COMPLETENESS OF ELECTRONIC COPIES OF THIS PLAN SHEET.

TTLB TEMPLATE REVISION DATE: 02/2013
SHEET ISSUE DATE: 04/08/14
FILE PATH: C:□Users.Y□in.Do□□ents.S-GRANADA HILL-V17_Y□in.rvt

REVISION DATES (DESIGN STAGE ONLY)

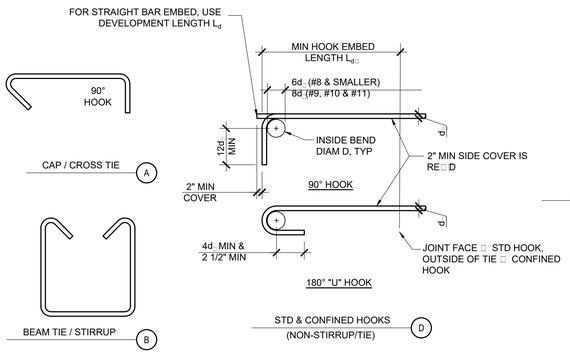

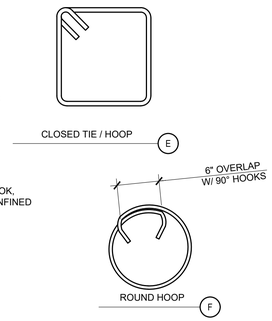

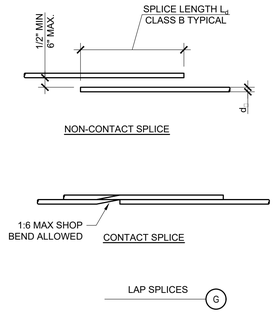

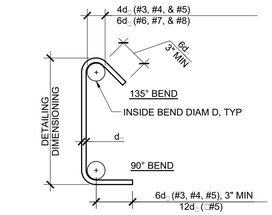

BAR SIZE	FINISHED BEND DIAMETER "D" IN INCHES
#9	9 1/2"
#10	10 3/4"
#11	12"
#14	18 1/4"
#18	24"

STANDARD HOOKS

	BAR SIZE	L_{dh} □ STD HOOK	LAP SPL□E □□□ CLASS B		L_d □□□ DEVELOPMENT LENGTH	
			TOP	OTHER	TOP	OTHER
3000 PSI NWC	#3	6	29	23	22	17
	#4	8	38	29	29	22
	#5	10	47	37	36	28
	#6	12	56	43	43	33
	#7	14	82	63	63	48
	#8	16	94	72	72	55
	#9	18	106	81	81	62
	#10	20	119	91	91	70
	#11	22	132	102	101	78
4000 PSI NWC	#3	6	25	20	19	15
	#4	7	33	25	25	19
	#5	9	41	32	31	24
	#6	10	49	38	37	29
	#7	12	71	55	54	42
	#8	14	81	63	62	48
	#9	15	91	71	70	54
	#10	17	103	80	79	61
	#11	19	114	88	87	67
5000 PSI NWC	#3	6	23	17	17	13
	#4	6	30	23	23	17
	#5	8	37	29	28	22
	#6	9	45	34	34	26
	#7	11	64	50	49	38
	#8	12	73	56	56	43
	#9	14	82	63	63	48
	#10	16	93	71	71	54
	#11	17	102	78	78	60

NOTES:
1. L_{dh} - HOOK DEVELOPMENT LENGTH.
2. L_d - DEVELOPMENT LENGTH.
3. SEE BUILDING CODE AND ACI 318-14 VERSION FOR ALL RE□UIREMENTS NOT NOTED.
4. FOR LIGHTWEIGHT CONCRETE MULTIPLY L_{dh} AND L_d VALUES SHOWN BY 1.3.
5. "TOP" BARS ARE HORIZONTAL WITH MORE THAN 12" OF FRESH CONCRETE CAST BELOW BARS. ALL OTHER BARS ARE "OTHER" BARS.
6. STD HOOK L_{dh} DOES NOT ACCOUNT FOR THE EFFECT OF TIES. CONFINED HOOK L_{dh} MAY BE USED WHERE ACI 318-14 25.4.3.1 APPLIES.
7. VALUES SHOWN ABOVE ARE FOR GRADE 60 (FY=60 KSI) REINFORCEMENT.
8. SPLICE LENGTHS SHOWN ARE FOR CLEAR SPACING NOT LESS THAN 2d$_b$, CONCRETE COVER NOT LESS THAN d$_b$.
9. FOR EPOXY-COATED REINFORCEMENT, SEE BUILDING CODE

5 TYPICAL REINFORCEMENT DETAILS AND DEVELOPMENT LENGTHS
SCALE: N.T.S.

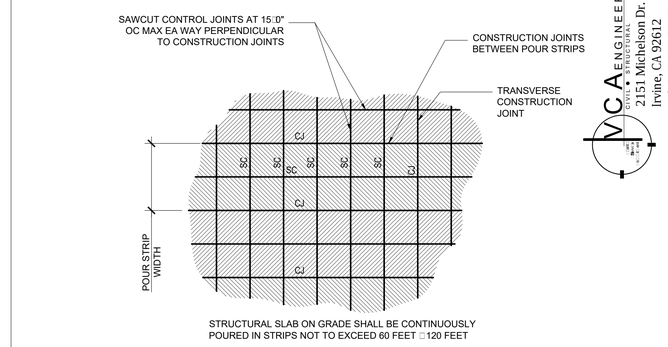

STRUCTURAL SLAB ON GRADE SHALL BE CONTINUOUSLY POURED IN STRIPS NOT TO EXCEED 60 FEET □120 FEET

SLAB PER PLAN
C

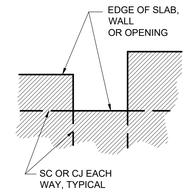

RE-ENTRANT CORNER
D

NOTES:
1. SEE ARCHITECTURAL PLANS FOR LOCATIONS OF VISUALLY EXPOSED CONTROL JOINTS.
2. FOR POURING SE□UENCE OTHER THAN THAT SHOWN ON THESE PLANS, SUBMIT SHOP DRAWINGS TO SEOR FOR REVIEW 7 DAYS PRIOR TO POUR.
3. SEE DETAIL 9/- FOR SC AND CJ DETAIL.

6 DETAIL
SCALE: N.T.S.

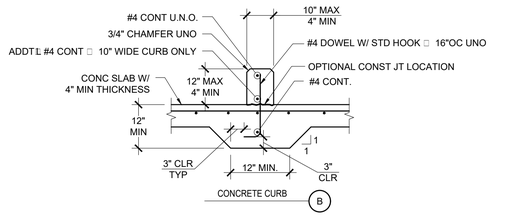

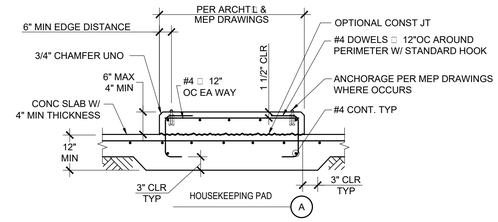

7 TYPICAL CONCRETE PAD AND CURB □ ON GRADE
SCALE: N.T.S.

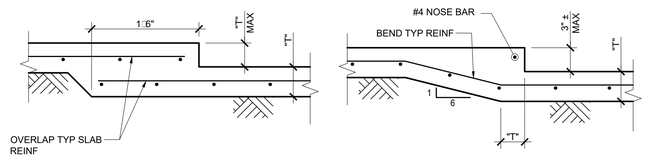

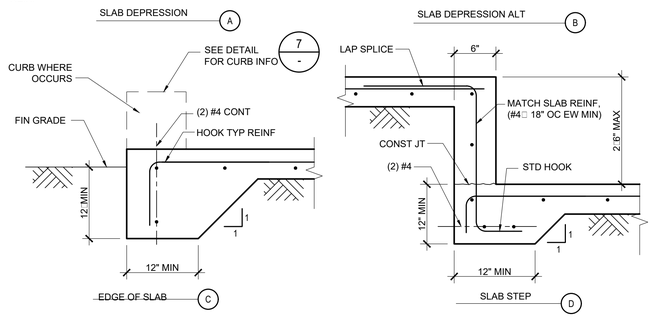

8 TYPICAL SLAB ON GRADE DETAILS
SCALE: N.T.S.

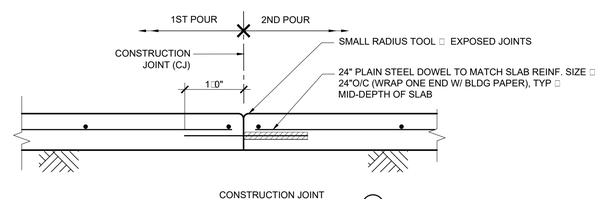

TYPICAL SLAB ON GRADE CONTROL JOINT (FOR SLAB THICKNESS 4" TO 6")
SCALE: N.T.S.

9

VCA ENGINEERS, INC.
CIVIL • STRUCTURAL
2151 Michelson Dr. #240
Irvine, CA 92612
Tel. 949.679.0870
Fax. 949.679.9370
Project No. D312

BUREAU OF ENGINEERING
OFFICIAL RECORD

DEPARTMENT OF PUBLIC WORKS
BUREAU OF ENGINEERING
CITY OF LOS ANGELES
ENGINEERING

NO.	REVISION DESCRIPTION	DATE	BY

BUILDING NO. -
INDEX NO. RP-300118

REGISTERED PROFESSIONAL ENGINEER — JOHN-KEUN YANG — No. S4029 — EXP. 9/30/20 — STRUCTURAL — STATE OF CALIFORNIA

CITY ENGINEER: GARY LEE MOORE, PE, ENV SP
ARCHITECTURAL DIVISION

	DATE:
ARCHITECT/ENGINEER: JHON SPARANO LIC. NO.: LICENSE	11/01/18
DESIGNED BY: SPARANO □ MOONEY ARCHITECTURE	11/01/18
DRAWN BY: ALEX □	11/01/18
CHECKED BY: YOUNG, NAM	11/01/18
APPROVED BY:	11/01/18

BID SET
PROJECT ISSUE DATE: 06/22/21

VERTICAL CONTROL:
HORIZONTAL CONTROL:

SHEET TITLE: TYPICAL DETAILS

PROJECT: GRANADA HILLS POOL AND BATH HOUSEREPLACEMENT PROJECT

ADDRESS: 16730 CHATSWORTH STREETGRANADA HILLS, CA 91344

WORK ORDER NO. #E170517
PLAN FILE NO.
DRAWING NO. S1.01
SHEET OF SHEETS

THE CITY OF LOS ANGELES OR ITS OFFICERS OR AGENTS SHALL NOT BE RESPONSIBLE FOR THE ACCURACY OR COMPLETENESS OF ELECTRONIC COPIES OF THIS PLAN SHEET.

TTLB TEMPLATE REVISION DATE: 02/2013
SHEET ISSUE DATE: 04/08/14
FILE PATH: C:\Users.Y□.in\Do□□ents\S-GRANADA HILL-V17_Y□.in.rvt

REVISION DATES (DESIGN STAGE ONLY)

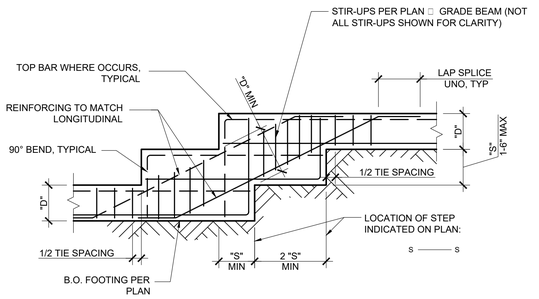

NOTES:
1. FOR FTG REINFORCING SEE PLANS AND DETAILS.
2. VERTICAL WALL DOWELS SHALL EXTEND TO BOTTOM OF FOOTING.
3. TRANSVERSE STEEL NOT SHOWN FOR CLARITY.
4. TWO STEPS ARE SHOWN, DETAIL FOR SINGLE STEP OR ADDITIONAL STEPS IS SIMILAR.

1 TYPICAL STEPPED FOOTING/GRADE BEAM
SCALE: N.T.S.

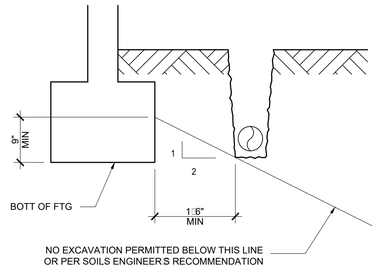

NOTE:
THE CONTRACTOR SHALL BE RESPONSIBLE FOR SHORING OR OTHERWISE MAINTAINING THE SIDES OF THE EXCAVATION FROM CAVE-INS UNTIL ALL BACKFILL IS COMPLETED PER SPECIFICATIONS AND GEOTECHNICAL REPORT.

2 TYPICAL EXCAVATION PARALLEL TO FOOTING
SCALE: N.T.S.

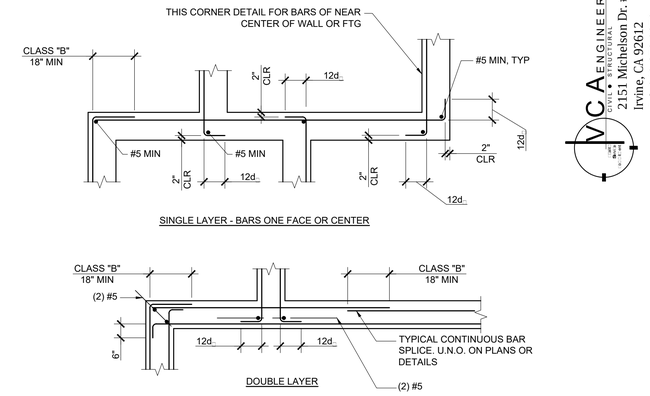

3 REINF BAR SPLICES AT CONT WALL FTGS INTERSECTIONS
SCALE: N.T.S.

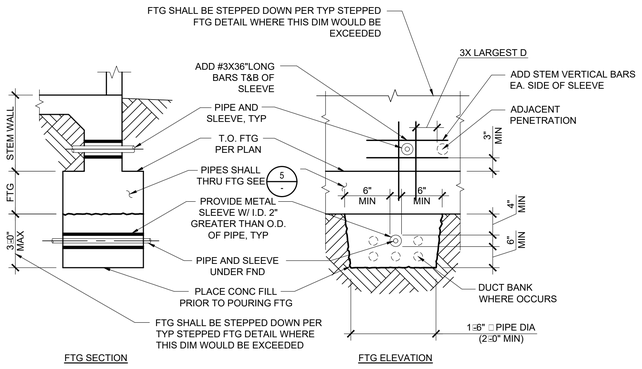

NOTE:
PIPES GREATER THAN 8" IN SIZE, BUNDLES OR BANKS NOT SPECIFICALLY SHOWN ON THE STRUCTURAL PLANS ARE NOT ALLOWED TO BE PLACED WITHOUT OBTAINING EOR APPROVAL.

4 PIPE TRENCH FOOTING DETAIL
SCALE: N.T.S.

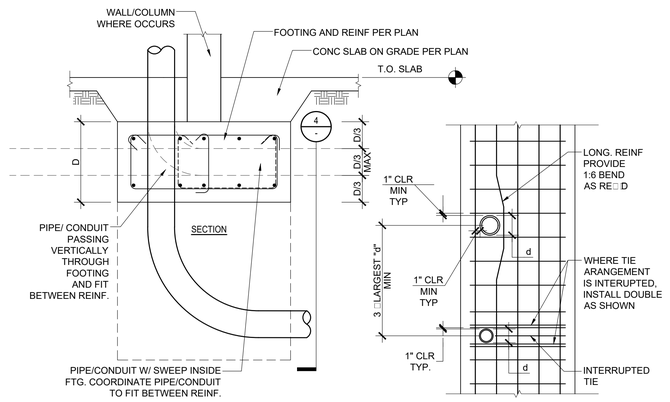

SEE MEP DRAWINGS FOR ADDITIONAL INFORMATION

5 PIPE/ CONDUIT SWEEP THRU FOOTING
SCALE: N.T.S.

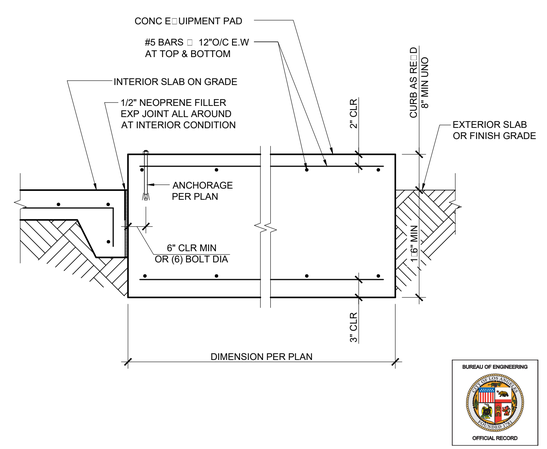

BUREAU OF ENGINEERING
OFFICIAL RECORD

6 TYPICAL ISOLATED E□UIPMENT PAD
SCALE: N.T.S.

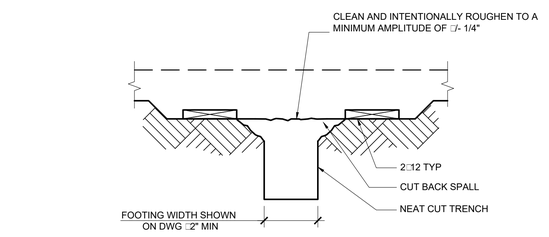

NOTES:
1. FOOTINGS POURED AGAINST EARTH ARE SUBJECT TO APPROVAL OF GEOTECHNICAL ENGINEER.
2. FOOTING WIDTHS SHALL NOT BE MORE THAN 4" WIDER THAN SHOWN ON PLAN.
3. FORMWORK NOT PERMITTED BELOW GRADE.
4. FOUNDATION CONCRETE MAY BE PLACED DIRECTLY INTO NEAT EXCAVATIONS PROVIDED THE FOUNDATION TRENCH WALLS ARE STABLE AS DETERMINED BY THE GEOTECHNICAL ENGINEER. THE 2□12 SHOWN IS MANDATORY TO ENSURE CLEAN EXCAVATIONS IMMEDIATELY PRIOR TO AND DURING THE PLACING OF CONCRETE.
5. STAKES NOT PERMITTED IN THE FOOTING AREA.

7 FOOTING POURED AGAINST EARTH
SCALE: N.T.S.

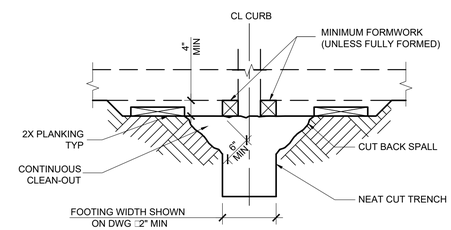

NOTES:
1. FOOTINGS POURED AGAINST EARTH ARE SUBJECT TO APPROVAL OF GEOTECH. ENGR.
2. FOOTING WIDTHS SHALL NOT BE MORE THAN 4" WIDER THAN SHOWN ON PLAN.
3. FORMWORK NOT PERMITTED BELOW GRADE UNLESS FULLY FORMED.
4. FOUNDATION CONCRETE MAY BE PLACED DIRECTLY INTO NEAT EXCAVATIONS PROVIDED THE FOUNDATION TRENCH WALLS ARE STABLE AS DETERMINED BY THE GEOTECHNICAL ENGINEER. THE MINIMUM FORMWORK SHOWN ON THE DRAWINGS IS MANDATORY TO ENSURE CLEAN EXCAVATIONS IMMEDIATELY PRIOR TO AND DURING THE PLACING OF CONCRETE.
5. CONT CLEAN-OUT STAKES NOT PERMITTED IN THE FTG AREA.
6. AFTER CONCRETE HAS SET, REMOVE LAITANCE AND SCUM.

8 FOOTING POURED AGAINST EARTH
SCALE: N.T.S.

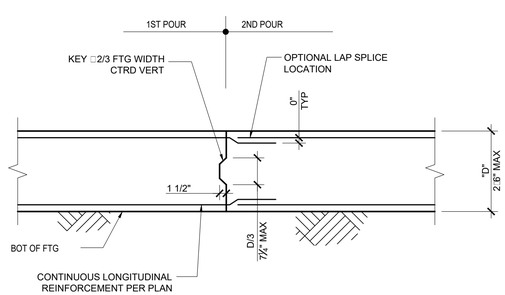

NOTES:
1. PROVIDE ADE□UATE SUPPORT FOR LONGITUDINAL REINF WITHIN 6" OF JT USING FTG TIES, VERT DOWELS OR OTHER MEANS.
2. SECTIONS SHOWN ARE AT CENTER OF FTG IN LONGITUDINAL DIRECTION.

9 CONSTRUCTION JOINT AT FOOTING/GRADE BEAM
SCALE: N.T.S.

VCA ENGINEERS, INC.
CIVIL • STRUCTURAL • MECHANICAL
2151 Michelson Dr. #240
Irvine, CA 92612
Tel. 949.679.0870
Fax. 949.679.9370
Project No. D312

BUREAU OF ENGINEERING
ENGINEERING
CITY OF LOS ANGELES

NO.	REVISION DESCRIPTION	DATE	BY

BUILDING NO. -
INDEX NO. RP-300118

REGISTERED PROFESSIONAL ENGINEER DOUGLAS KEUN WALTERS No. S4029 EXP. 9/30/20 STRUCTURAL STATE OF CALIFORNIA

DEPARTMENT OF PUBLIC WORKS
CITY OF LOS ANGELES

GARY LEE MOORE, PE, ENV SP — CITY ENGINEER

	ARCHITECTURAL DIVISION	DATE:
DIVISION		11/01/18
ARCHITECT/ENGINEER: JHON SPARANO	LIC. NO.: LICENSE	11/01/18
DESIGNED BY: SPARANO □ MOONEY	ARCHITECTURE	11/01/18
DRAWN BY: ALEX, □		11/01/18
CHECKED BY: YOUNG, NAM		11/01/18
APPROVED BY:		

BID SET
PROJECT ISSUE DATE: 06/22/21

VERTICAL CONTROL:
HORIZONTAL CONTROL:

SHEET TITLE: TYPICAL DETAILS

PROJECT: GRANADA HILLS POOL AND BATH HOUSE REPLACEMENT PROJECT

ADDRESS: 16730 CHATSWORTH STREET GRANADA HILLS, CA 91344

WORK ORDER NO. #E170517

PLAN FILE NO.

DRAWING NO. S1.02
SHEET OF SHEETS

THE CITY OF LOS ANGELES OR ITS OFFICERS OR AGENTS SHALL NOT BE RESPONSIBLE FOR THE ACCURACY OR COMPLETENESS OF ELECTRONIC COPIES OF THIS PLAN SHEET.

TTLB TEMPLATE REVISION DATE: 02/2013
SHEET ISSUE DATE: 04/08/14
FILE PATH: C:\Users\Y□in\Do□□ents\S-GRANADA HILL-V17_Y□in.rvt

REVISION DATES (DESIGN STAGE ONLY)

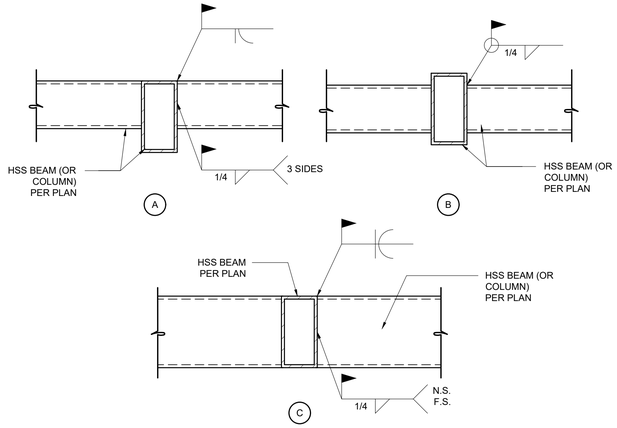

1 HSS TO HSS CONNECTION
SCALE: N.T.S.

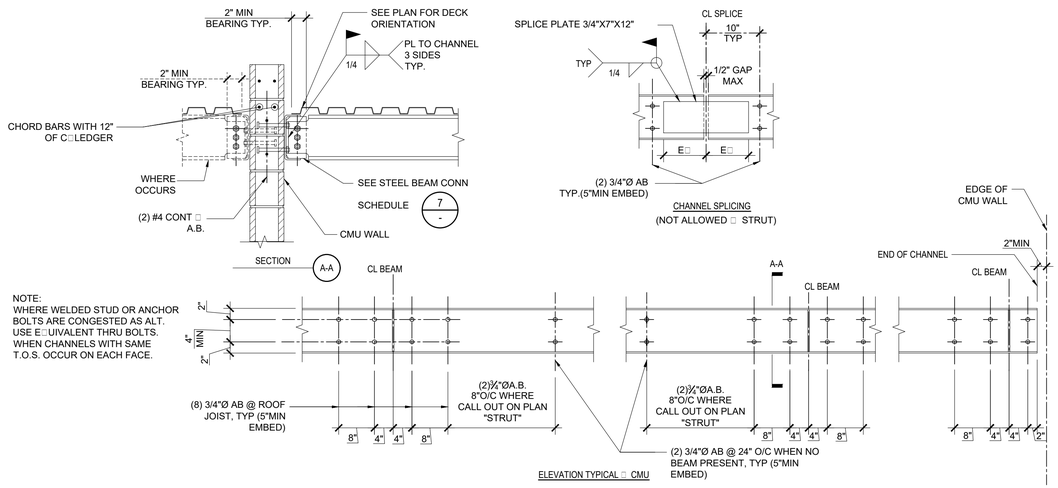

2 ROOF BEAM TO CMU CONNECTION
SCALE: N.T.S.

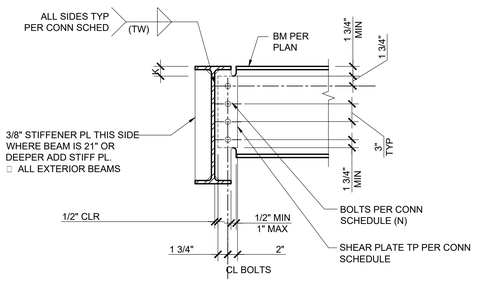

ONE-SIDED CONNECTION OCCURS WHERE OPPOSITE BEAMS ARE OFFSET BY 12" OR MORE

NOTE:
1. USE STANDARD BOLT HOLES

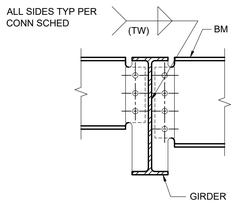

BEAM EACH SIDE

FOR ITEMS NOT SHOWN OR NOTED SEE "BEAM ONE SIDE"

TYP WF BEAM TO WF BEAM

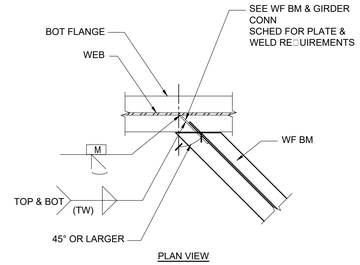

PLAN VIEW

SKEWED BEAM CONNECTION

BEAM ONE SIDE

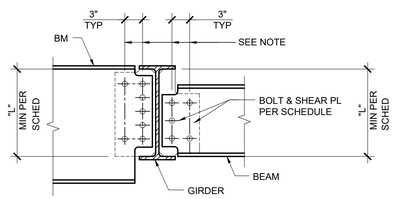

DROP BEAM OR DEEPER BEAM THAN GIRDER CONNECTION

NOTE:
WHERE NUMBER OF RE□UIRED BOLTS PER PLAN OR SCHEDULE ARE MORE THAN NUMBER OF BOLTS THAT FIT AT ONE ROW, USE MAXIMUM BOLTS AT FIRST ROW & BALANCE IN SECOND ROW (2 BOLTS MIN AT SECOND ROW).

WF BM & GIRDER CONNECTION SCHEDULE				
WF BM	(N) A325N BOLTS UNO	(L) MIN PLATE / WELD LENGTH	(TP) MIN PLATE THICKNESS	(TW) [1] MIN WELD THICKNESS
W8	(2) 3/4"Ø	5 1/2"	3/8"	1/4"
W10	(2) 3/4"Ø	6"	3/8"	1/4"
W12	(3) 1"Ø	9"	3/8"	1/4"
W14	(3) 1"Ø	9"	3/8"	1/4"
W16	(4) 1"Ø	12"	3/8"	1/4"
W18	(5) 1"Ø	15"	1/2"[2]	3/8"
W21,24	(6) 1"Ø	18"	1/2"[2]	3/8"
W27	(7) 1"Ø	21"	1/2"[2]	3/8"
W30	(8) 1"Ø	24"	1/2"[2]	3/8"
W33	(9) 1"Ø	27"	1/2"[2]	3/8"
W36	(10) 1"Ø	31"	1/2"[2]	3/8"

NOTES:
1. 5/16" MIN FOR COLUMN FLANGES GREATER THAN 3/4" THICK
2. PL 1/2" & THICKER SHALL BE GAS OR SAW CUT
3. ALL BOLT HOLES SHALL BE STD HOLES UNO.

7 TYPICAL BEAM TO COLUMN AND BEAM TO BEAM CONNECTION
SCALE: N.T.S.

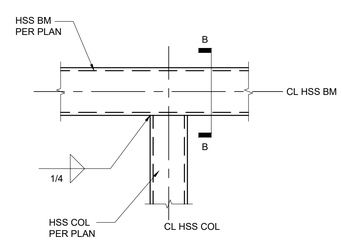

ELEVATION AA

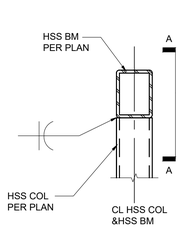

SECTION BB

6 HSS COL TO BEAM SIMPLE CONNECTION
SCALE: N.T.S.

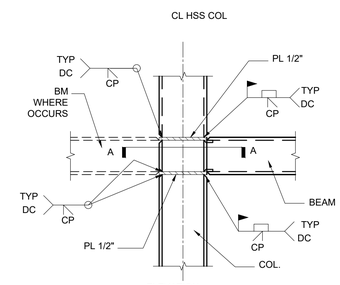

ELEVATION

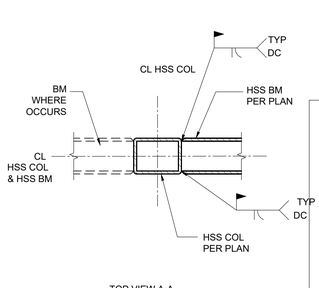

TOP VIEW A-A

PERPENDICULAR HSS BEAM NOT SHOWN FOR CLARITY

SEE MOMENT FRAME AND COMPLETE JOINT PENETRATION CONNECTION NOTES ON S0.02 SERIES (GENERAL NOTE)

9 HSS COL TO BEAM MOMENT CONNECTION
SCALE: N.T.S.

THE CITY OF LOS ANGELES OR ITS OFFICERS OR AGENTS SHALL NOT BE RESPONSIBLE FOR THE ACCURACY OR COMPLETENESS OF ELECTRONIC COPIES OF THIS PLAN SHEET.

TTLB TEMPLATE REVISION DATE: 02/2013
SHEET ISSUE DATE: 04/08/14
FILE PATH: C:\Users\Y□in\Do□□ents\S.GRANADA HILLS-V17_Y□in.rvt
REVISION DATES (DESIGN STAGE ONLY)

VCA ENGINEERS, INC.
CIVIL • STRUCTURAL • MECHANICAL
2151 Michelson Dr. #240
Irvine, CA 92612
Tel. 949.679.0870
Fax. 949.679.9370
Project No. D312

BUREAU OF ENGINEERING
OFFICIAL RECORD

BUREAU OF ENGINEERING
ENGINEERING
CITY OF LOS ANGELES

NO.	REVISION DESCRIPTION	DATE	BY

BUILDING NO. -
INDEX NO. RP-300118

REGISTERED PROFESSIONAL ENGINEER
DOUGLAS KEUN YIN
No. S4029
EXP. 9/30/20
STRUCTURAL
STATE OF CALIFORNIA

DEPARTMENT OF PUBLIC WORKS
BUREAU OF ENGINEERING
CITY OF LOS ANGELES

GARY LEE MOORE, PE, ENV SP
CITY ENGINEER
ARCHITECTURAL DIVISION
DATE: 11/01/18

ARCHITECT/ENGINEER:	JHON SPARANO	LIC. NO.: LICENSE
DESIGNED BY:	SPARANO □ MOONEY ARCHITECTURE	11/01/18
DRAWN BY:	ALEX. □	11/01/18
CHECKED BY:	YOUNG, NAM	11/01/18
APPROVED BY:		11/01/18

VERTICAL CONTROL:
HORIZONTAL CONTROL:
SHEET TITLE: TYPICAL DETAILS
PROJECT: GRANADA HILLS POOL AND BATH HOUSEREPLACEMENT PROJECT
ADDRESS: 16730 CHATSWORTH STREETGRANADA HILLS, CA 91344

BID SET
PROJECT ISSUE DATE: 06/22/21

WORK ORDER NO. #E170517
PLAN FILE NO.
DRAWING NO. S1.03
SHEET OF SHEETS

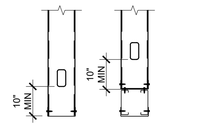

NON-BEARING - HEADER DIRECTLY OVER OPENING

HEADER DETAIL A

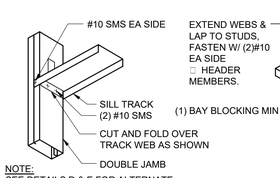

NOTE:
SEE DETAILS D & E FOR ALTERNATE CONNECTION AS CONTRACTORS OPTION.

DETAIL B

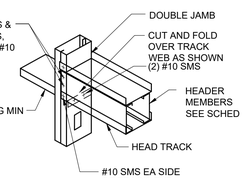

DETAIL C

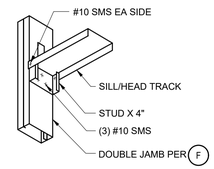

ALTERNATE D

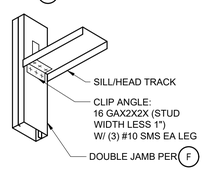

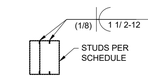

WELD OPTION

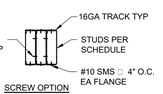

SCREW OPTION

JAMB STUD SCHEDULE (INTERIOR)				
MAX OPENING "L" OR COMBINED OPENING L□L(RIGHT) □ L (LEFT) AT ADJACENT OPENING	HT □ 16□0"		16□0" □ HT □ 26□0"	
	STUDS	CONN AT TOP TRACK	STUDS	CONN AT TOP TRACK
L □ 6□0"	(2) 400S162-33	SL400□	(2) 400S300-97	SL400□
	(2) 600S162-33	SL600□	(2) 600S350-54	SL600□
6□0" □ L □ 10□0"	(2) 400S162-43	SL400□	(2) 400S300-97	SL400□
	(2) 600S162-43	SL600□	(2) 600S350-54	SL600□
10□0" □ L □ 16□0"	(2) 400S162-54	SL400□	-	-
	(2) 600S162-54	SL600□	(2) 600S350-68	SL600□

NOTES:
1. JAMB STUDS DEPTHS SHALL MATCH TYPICAL WALL STUD DEPTHS.
2. □ DENOTES TSN (THE STEEL NETWORK) CLIPS. (ICC-ESR-2049)

TYP. JAMB SHCEDULE F

NOTE:
1. PROVIDE STUDS, TRACKS AND BRACING PER SCHEDULE BELOW:

METAL STUD SCHEDULE UNO ON PLAN REF: STEEL STUD MANUFACTURER□S ASSOCIATION (ESR-3064P)						
TRACK	NOMINAL STUD SIZE	SSMA PRODUCT IDENTIFICATION	STUD SPACING	MINIMUM PROPERTIES		
				I□(in⁴)	S□(in³)	Ma (in-□)
BOTTOM TRACK	STUD WIDTH □1 1/2"□16GA	600T150-54	-	2.400	0.609	18.24
TOP TRACK	STUD WIDTH □1 1/2"□16GA	600T150-54	-	2.400	0.609	18.24
CAPPING TRACK	STUD WIDTH □2"□16GA	600T200-54	-	2.641	0.717	21.48

HEADER BEAM SCHEDULE (INTERIOR NON-BEARING PARTITIONS) MAX WIND □ 5PSF		
SPAN "L"	CONDITION	LINTEL SIZE
≤ 4□0"	2	16 GA TRACK, WIDTH TO MATCH
□ 4□0" - ≤ 8□0"	1	(2) 6"X20 GA METAL STUDS (600S162-33)
□ 8□0" - ≤ 12□0"	1	(2) 6"X18 GA METAL STUDS (600S162-43)
□ 12□0" - ≤ 16□0"	1	(2) 8"X16 GA METAL STUDS (800S162-54)

2. ALL STUDS AND TRACKS SHALL CONFORM TO ASTM A1003.
   a. 18GA AND LIGHTER: MINIMUM YIELD POINT OF 33 KSI
   □. 16GA AND HAVIER: MINIMUM YIELD POINT OF 50 KSI.
   □. ALL STUDS AND TRACKS SHALL BE MANUFACTURED BY CURRENT MEMBERS OF THE STEEL STUD MANUFACTURERS ASSOCIATION (SSMA) LISTED IN ICC REPORT NO. ESR-3064P. ALL STUDS AND TRACKS SHALL COMPLY WITH ICC REPORT NO. ESR-3064P.
3. ALL FRAMING COMPONENTS SHALL BE CUT S□UARELY OR ON ANGLE (SUCH AS BRACING) TO S□UARELY FIT AGAINST ABUTTING MEMBERS. MEMBERS SHALL BE HELD FIRMLY POSITION UNTIL PROPERLY FASTENED.
4. STUD AND TRACKS SHALL BE ATTACHED BY WELDING AND SHEET METAL SCREWS AS NOTED ON THE DRAWINGS.
5. MANUFACTURER PROVIDED PUNCH-OUTS MAY BE LOCATED ALONG THE CENTERLINE OF THE WEBS OF THE FRAMING MEMBERS. PUNCH-OUTS SHALL HAVE A MINIMUM CENTER-TO-CENTER SPACING OF 24". PUNCH-OUT SHALL HAVE A MAXIMUM WIDTH OF HALF THE MEMBER DEPTH OR 2 1/2", WHICHEVER IS LESS, AND MAXIMUM LENGTH OF 4 1/2".
6. SPLICES IN STUDS AND BRACES SHALL NOT PERMITTED.
7. ALL FRAMING SHALL BE COORDINATED WITH GLAZING MANUFACTURERS, MECHANICAL, ELECTRICAL, PLUMBING AND OTHER TRADES.
8. PROVIDE 0.08" THICK □1.1" S□UARE OR 1.425" ROUND WASHERS FOR ALL POWDER ACTUATED FASTENERS.
9. LOCATE PUNCHOUTS 10" CLEAR OF CONNECTIONS & FROM END OF STUD. IF PUNCH IS CLOSER THAN 10" TO CONNECTION, SEE DETAIL 6C

4 TYPICAL INTERIOR MTL STUD SCHED. & WALL FRAMING
SCALE: N.T.S.

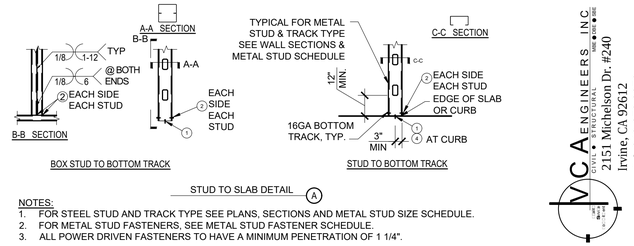

STUD TO SLAB DETAIL A

NOTES:
1. FOR STEEL STUD AND TRACK TYPE SEE PLANS, SECTIONS AND METAL STUD SIZE SCHEDULE.
2. FOR METAL STUD FASTENERS, SEE METAL STUD FASTENER SCHEDULE.
3. ALL POWER DRIVEN FASTENERS TO HAVE A MINIMUM PENETRATION OF 1 1/4".

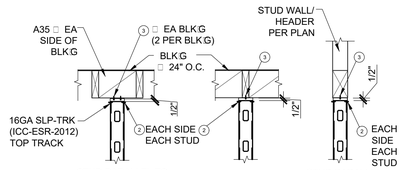

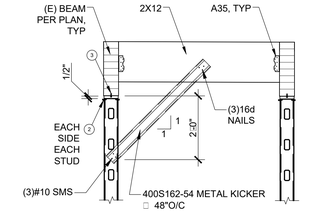

STUD TO JOIST DETAIL B

METAL STUD FASTENER SCHEDULE		
MARK	FASTENERS SIZE & SPACING	REMARKS
1	HILTI 0.157"Ø X-U SHOT PIN □ 24" O/C W/ 2" EMBED	ESR-1663, LARR# 25675
2	#10 SHEET METAL SCREW	ER-5202
3	#10 X 2" □ WOOD	ER-5202
4	HILTI KB3 1/4"Ø x2" EMBED EXPANSION ANCHOR □ 24" O/C	ESR-1385,2302, LARR# 25901

INTERIOR METAL STUD SIZE(ESR-3064P)□		
MAX HEIGHT	MEMBER	SPACING
16□5"	362S125-43	16" O/C
26□0"	600S162-43	16" O/C
30□5"	600S162-68	16" O/C
39□0"	600S250-68	12" O/C

□U.N.O. ON ARCH OR STRUCT. DWGS

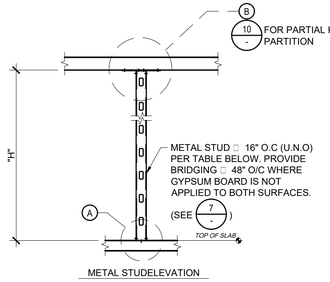

NOTES:
1. MAXIMUM STUD HEIGHT "H" FOR STUDS
2. SEE ARCHITECTURAL FOR OTHER CONDITIONS.
3. LIMIT L/240 DEFLECTION.
4. STUDS CARRYING E□UIPMENT OR CASEWORK WEIGHING 40 LBS OR MORE SHALL BE 16GA MIN.
5. □□WEB STIFFENERS RE□UIRED AT ENDS
6. (NS) □ INDICATES NON-STRUCTURAL SECTION

6 STEEL STUD TOP & BOTTOM CONNECTION DETAILS
SCALE: N.T.S.

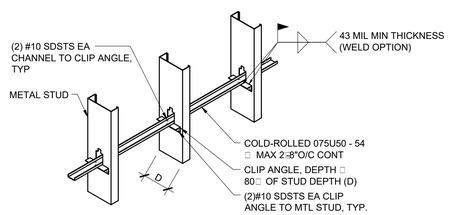

SEE SCHEDULE ON THIS SHEET FOR METAL STUD & TRACK SIZES

7 BRIDGING CHANNEL W/ CLIP ANGLE
SCALE: N.T.S.

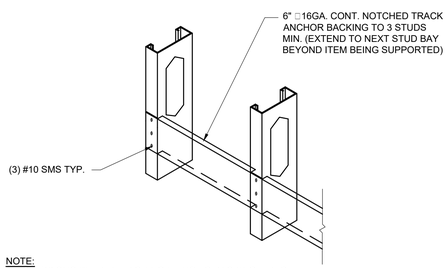

NOTE:
1. USE #10 SMS WHEN ATTACHING ITEMS TO BACKING, U.N.O.
2. MAX WT. □150LBS

8 BACKING DETAIL
SCALE: N.T.S.

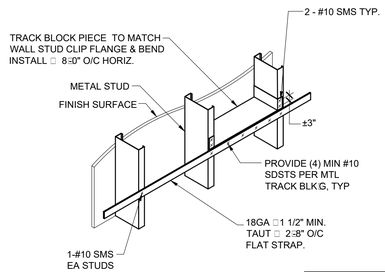

SEE SCHEDULE ON THIS SHEET FOR METAL STUD & TRACK SIZES

9 SINGLE FLAT BRIDGING W/ BLOCKING
SCALE: N.T.S.

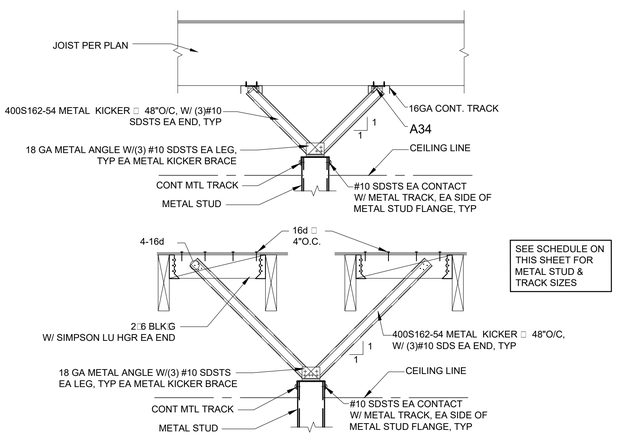

SEE SCHEDULE ON THIS SHEET FOR METAL STUD & TRACK SIZES

10 NON-LOAD BEARING INTERIOR WALL FRAMED TO CEILING W/ DIAGONAL KICKER
SCALE: N.T.S.

VCA ENGINEERS, INC.
CIVIL • STRUCTURAL
2151 Michelson Dr. #240
Irvine, CA 92612
Tel. 949.679.0870
Fax. 949.679.9370
Project No. D312

BUREAU OF ENGINEERING
OFFICIAL RECORD

ENGINEERING
CITY OF LOS ANGELES

BUREAU OF ENGINEERING
DEPARTMENT OF PUBLIC WORKS
CITY OF LOS ANGELES

NO.	REVISION DESCRIPTION	DATE	BY

BUILDING NO. -

INDEX NO. RP-300118

REGISTERED PROFESSIONAL ENGINEER DOUGLAS KEUN YOUNG No. S4029 Ex. 9/30/20 STRUCTURAL STATE OF CALIFORNIA

CITY ENGINEER	GARY LEE MOORE, PE, ENV SP
	ARCHITECTURAL DIVISION
ARCHITECT/ENGINEER:	JHON SPARANO LIC. NO.: LICENSE
DESIGNED BY:	SPARANO □ MOONEY ARCHITECTURE
DRAWN BY:	ALEX. □
CHECKED BY:	YOUNG, NAM
APPROVED BY:	
DATE:	11/01/18 (×5)

VERTICAL CONTROL:
HORIZONTAL CONTROL:

SHEET TITLE: TYPICAL DETAILS

PROJECT: GRANADA HILLS POOL AND BATH HOUSEREPLACEMENT PROJECT

ADDRESS: 16730 CHATSWORTH STREETGRANADA HILLS, CA 91344

BID SET
PROJECT ISSUE DATE: 06/22/21

WORK ORDER NO. #E170517

PLAN FILE NO.

DRAWING NO. S1.04
SHEET OF SHEETS

THE CITY OF LOS ANGELES OR ITS OFFICERS OR AGENTS SHALL NOT BE RESPONSIBLE FOR THE ACCURACY OR COMPLETENESS OF ELECTRONIC COPIES OF THIS PLAN SHEET.

TTLB TEMPLATE REVISION DATE: 02/2013
SHEET ISSUE DATE: 04/08/14
FILE PATH: C:\Users.Y□.inDo□□ents.S-GRANADA HILLS-V17_Y□.in.rvt

REVISION DATES (DESIGN STAGE ONLY)

SCHEDULE (SSMA ER-4943P)						
SPECIFIED FOR THIS PROJECT	MEMBER DESIGNATION	DESIGN THICKNESS	REFERENCE GAUGE NO.	SECTION PROPERTIES		
				AREA IN ^{2}	I□□ IN ^{4}	I□□ IN ^{4}
□	250S137-54	0.0566	16	0.316	0.318	0.080
□	400S162-54	0.0566	16	0.433	1.098	0.159
□	400S200-54	0.0566	16	0.500	1.292	0.287
□	400S200-68	0.0713	14	0.622	1.581	0.349
□	400S250-54	0.0566	16	0.566	1.509	0.515
□	400S250-68	0.0713	14	0.696	1.834	0.630
□	600S200-33	0.0346	20	0.379	2.075	0.209
□	600S250-68	0.0713	14	0.836	4.686	0.688
□	800S250-68	0.0713	14	0.976	9.209	0.752
□	400T150-33	0.0346	20	0.242	0.622	0.051
□	400T200-54	0.0566	16	0.452	1.269	0.182
□	400T200-68	0.0713	14	0.569	1.617	0.227
□	600T150-33	0.0346	20	.0311	1.590	0.057
□	600T200-97	0.1017	12	1.015	5.773	0.354
□	800T200-97	0.1017	12	1.218	11.212	0.379
□	400Z250-54	0.0566	16	0.566	1.544	1.079
□	400Z250-68	0.0713	14	0.696	1.819	1.288
□	600Z250-54	0.0566	16	0.680	3.910	1.079
□	600Z250-68	0.0713	14	0.836	4.662	1.288
□	800Z250-54	0.0566	16	0.794	7.628	1.079
□	800Z250-68	0.0713	14	0.976	9.176	1.289
□	1000Z250-68	0.0713	14	1.116	15.641	1.289
□	087F125-27	0.0283	22	0.104	0.013	-

NOTES:

1. ALL STEEL 54 MILS AND THICKER (16 GA AND THICKER) SHALL BE MINIMUM YIELD STRENGTH FY □50 KSI, COMPLYING WITH ASTM A653 SS GRADE 50 OR ASTM A1011 SS GRADE 50. STEEL 43 MILS AND THINNER, (18 GA AND THINNER) SHALL BE MINIMUM YIELD STRENGTH FY □33 KSI, COMPLYING WITH ASTM A653 SS GRADE 33 OR ASTM A1011 SS GRADE 33, GALVANIZED COATING SHALL COMPLY WITH ASTM A924.
2. STUD AND TRACK DESIGNATIONS PER STEEL STUD MANUFACTURER'S ASSOCIATION (SSMA), ICC ER-4943P.
3. PROVIDE SECTIONS HAVING PROPERTIES MEETING OR EXCEEDING ABOVE TABULATED GROSS SECTION PROPERTIES, ICC ER-5912P SECTIONS ACCEPTABLE.

DESIGNATION AS FOLLOWS:
600 S 250 - 54

- MATERIAL THICKNESS, "T" (E.G. 54 MILS □ 0.054 IN)
- FLANGE WIDTH, "W" (E.G. 250 X 1/100 □ 2.50 IN)
- SECTION TYPE (S□STUD, Z□ZEE PURLIN AND T□TRACK)
- MEMBER DEPTH, "D" (E.G. 600 X 1/100 □6.00 IN)

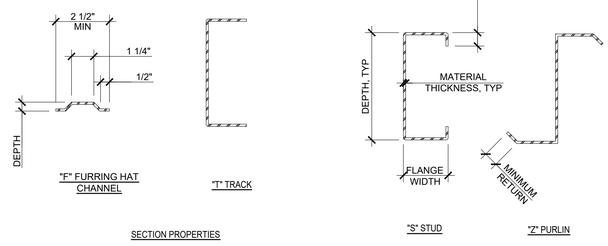

SECTION PROPERTIES

4 TYPICAL COLD-FORMED STEEL MEMBER PROPERTIES
SCALE: N.T.S.

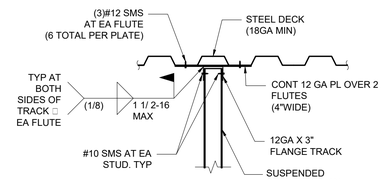

A WALL PARALLEL TO DECK FLUTES

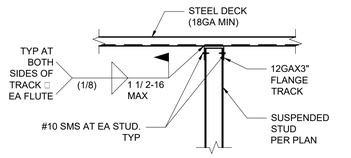

B WALL PERPENDICULAR TO DECK FLUTES

* AT EXTERIOR USE 5/8"Ø HILTI KB-TZ W/ 3 1/2" EMBED (ICC ESR 1917)

2 SUSPENDED STUD TO METAL DECK DETAIL
SCALE: N.T.S.

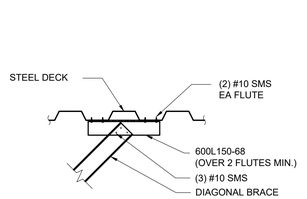

A PERPENDICULAR TO DECK FLUTES (BARE METAL DECK)

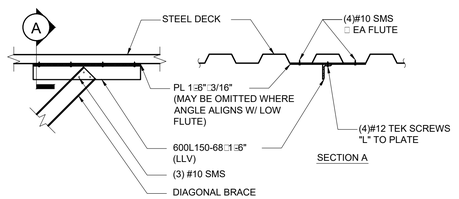

SECTION A

B PARALLEL TO DECK FLUTES (BARE METAL DECK)

5 WALL BRACE
SCALE: N.T.S.

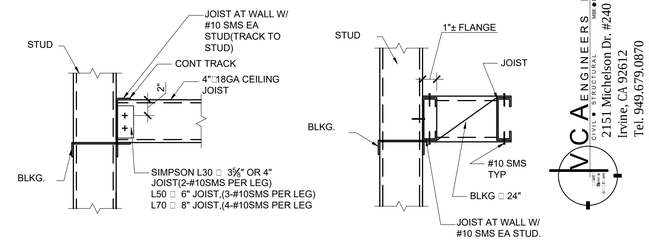

A JOIST INTO WALL

B JOIST PARALLEL TO WALL

INTERIOR METAL CEILING JOIST SCHEDULE					
NOMINAL SIZE	SSMA PRODUCT IDENTIFICATION	I□□(IN ^{4})	S□□(IN ^{3})	SPACING (IN)	MAXIMUM SPAN (L1)
3⅝"□20GA	362S162-33	0.551	0.304	16	8□6"
4"□18GA	400S162-43	0.892	0.446	16	9□6"
6"□18GA	600S162-43	2.316	0.772	16	11□0"
8"□18GA	800S162-43	4.633	1.158	16	12□0"

NOTES:

1. JOIST AND TRACK DESIGNATIONS ARE BASED ON STEEL STUD MANUFACTURER'S ASSOCIATION(ICC ER-3064P).
2. DESIGN LOADS:
   DEAD LOAD □ 20 PSF
3. SEE TYP. CEILING JOIST FRAMING DETAIL
4. PROVIDE IN-PLANE AND OUT-OF-PLANE BRACING PER 7/-
5. WHERE JOIST IS CUT, PROVIDE DOUBLE JOIST TO ADJ. CEILING JOIST NEXT TO CUT JOIST (DO NOT CUT MORE THAN ONE JOIST). 9/-
6. SEE DETAIL 8/- FOR BRACING RE□UIREMENTS.

6 METAL CEILING JOIST SCHEDULE (INTERIOR ONLY)
SCALE: N.T.S.

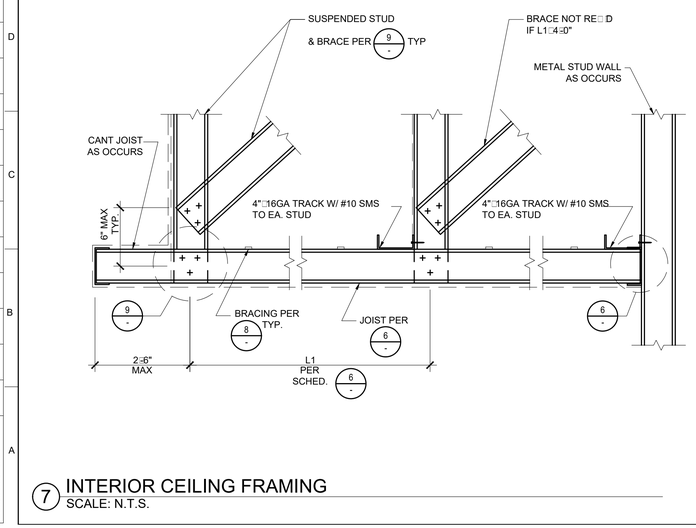

7 INTERIOR CEILING FRAMING
SCALE: N.T.S.

BLOCKING NOTE:
PLACE SOLID BLOCKING AT ENDS OF FLOOR SYSTEM, ADJACENT TO ALL OPENINGS, AND AT 10□0"O.C. MAX.

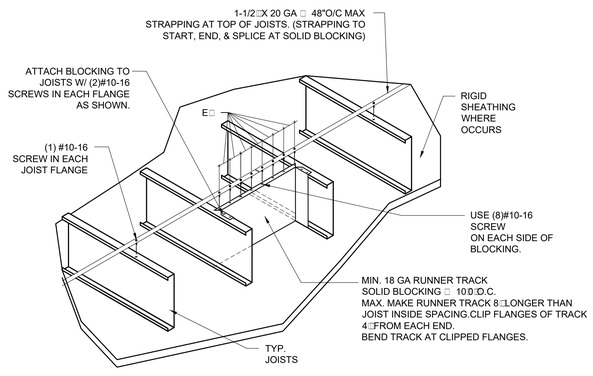

8 CEILING JOISTS FLANGE BRACING
SCALE: N.T.S.

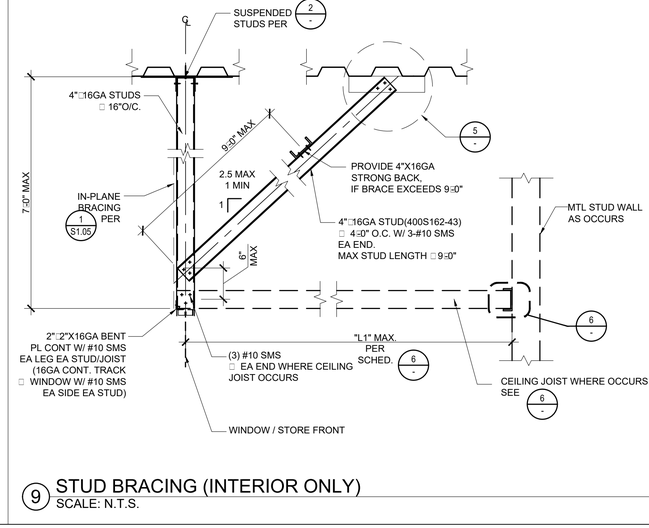

9 STUD BRACING (INTERIOR ONLY)
SCALE: N.T.S.

BUREAU OF ENGINEERING
OFFICIAL RECORD

THE CITY OF LOS ANGELES OR ITS OFFICERS OR AGENTS SHALL NOT BE RESPONSIBLE FOR THE ACCURACY OR COMPLETENESS OF ELECTRONIC COPIES OF THIS PLAN SHEET.

TTLB TEMPLATE REVISION DATE: 02/2013
SHEET ISSUE DATE: 04/08/14
FILE PATH: C:\Users\Y□\inDo□□ents\S.GRANADA HILLS.VI7_Y□.in.rvt

REVISION DATES (DESIGN STAGE ONLY)

VCA ENGINEERS, INC.
CIVIL • STRUCTURAL • MECHANICAL
2151 Michelson Dr. #240
Irvine, CA 92612
Tel. 949.679.0870
Fax. 949.679.9370
Project No. D312

BUREAU OF ENGINEERING
ENGINEERING
CITY OF LOS ANGELES

BUREAU OF ENGINEERING

NO.	REVISION DESCRIPTION	DATE	BY

BUILDING NO. -

INDEX NO. RP-300118

REGISTERED PROFESSIONAL ENGINEER
DOUGLAS KEON WONG
No. S4029
EXP. 9/30/20
STRUCTURAL
STATE OF CALIFORNIA

DEPARTMENT OF PUBLIC WORKS
CITY OF LOS ANGELES

GARY LEE MOORE, PE, ENV SP
CITY ENGINEER

ARCHITECTURAL DIVISION

		DATE:
ARCHITECTENGINEER:	JHON SPARANO	LIC. NO.: LICE
DESIGNED BY:	SPARANO □ MOONEY ARCHITECTURE	11/01/18
DRAWN BY:	ALEX. □	11/01/18
CHECKED BY:	YOUNG, NAM	11/01/18
APPROVED BY:		11/01/18

VERTICAL CONTROL:
HORIZONTAL CONTROL:

SHEET TITLE: TYPICAL DETAILS

PROJECT: GRANADA HILLS POOL AND BATH HOUSEREPLACEMENT PROJECT

ADDRESS: 16730 CHATSWORTH STREETGRANADA HILLS, CA 91344

BID SET
PROJECT ISSUE DATE: 06/22/21

WORK ORDER NO.
#E170517

PLAN FILE NO.

DRAWING NO.
S1.04A
SHEET OF SHEETS

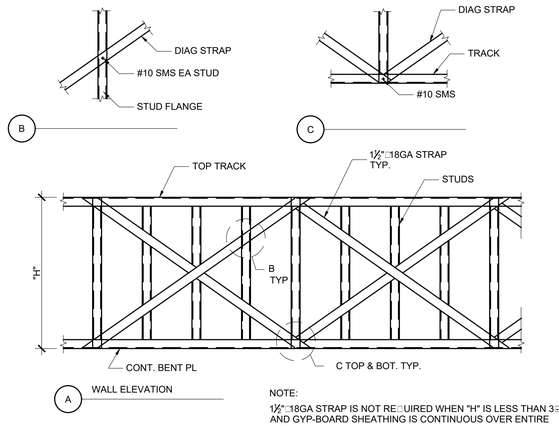

NOTE:
1½"□18GA STRAP IS NOT RE□UIRED WHEN "H" IS LESS THAN 3□0" AND GYP-BOARD SHEATHING IS CONTINUOUS OVER ENTIRE SURFACE.

1 IN-PLANE BRACING
SCALE: N.T.S.

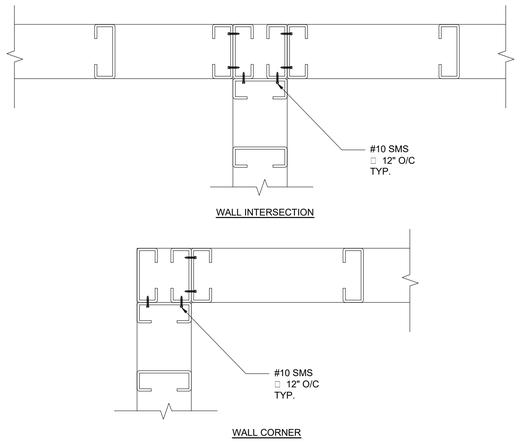

2 TYP. METAL STUD WALL AT INTERSECTION DETAILS
SCALE: N.T.S.

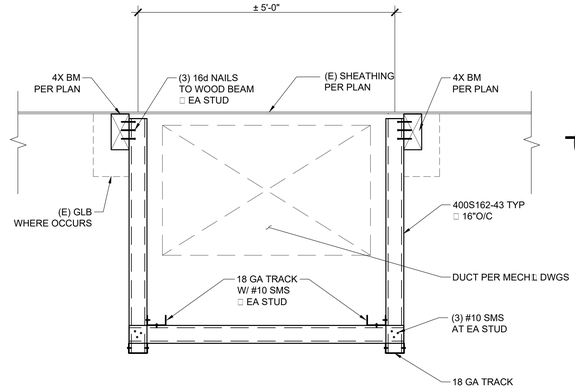

3 UTILITY CHASE
SCALE: N.T.S.

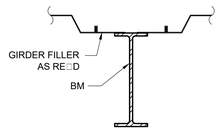

TYPICAL DECK SPLICE

METHOD OF CONNECTIONS:

1. ROOF DECK:
   - A. STEEL DECK SHALL BE FASTENED TO STEEL FRAMING AT ENDS OF UNITS AND AT ALL INTERMEDIATE SUPPORTS BY MINIMUM (4) 3/4" DIAMETER FUSION (PUDDLE) WELDS EACH PANEL. WHEN TWO PANELS ABUT, EACH PANEL SHALL BE SO ATTACHED.
   - B. SIDESEAMS SHALL BE BUTTON PUNCHED AT 12" O/C
   - C. AT ALL LONGITUDINAL SUPPORTS AND MEMBERS PARALLEL TO FLUTES, FASTEN WITH 3/4" DIAMETER FUSION (PUDDLE) WELDS □ 12"O/C
2. FLOOR:
   - A. STEEL DECK SHALL BE FASTENED TO STEEL FRAMING AT ENDS OF UNITS AND AT ALL INTERMEDIATE SUPPORTS BY (4) 3/4"Ø DIAMETER FUSION (PUDDLE) WELDS EACH PANEL. WHEN TWO PANELS ABUT, EACH PANEL SHALL BE SO ATTACHED.
   - B. SIDESEAMS SHALL BE BUTTON PUNCHED □ 36" O/C
   - C. AT ALL LONGITUDINAL SUPPORTS AND MEMBERS PARALLEL TO FLUTES, FASTEN WITH 3/4"Ø FUSION (PUDDLE) WELDS @ 12" O/C

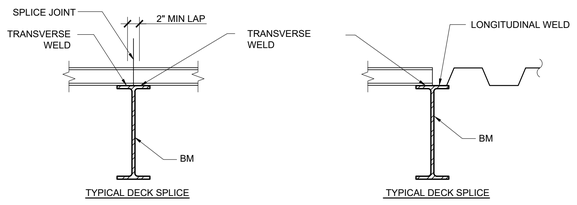

TYPICAL DECK SPLICE

TYPICAL DECK SPLICE

NOTES:

1. SEE DET. 6/- FOR DECK WELD/SIDE LAP DETAIL.
2. SEE DET. BELOW FOR WELD /PATTERN.



7 - WELD PATTERN

4 TYPICAL METAL DECK CONNECTIONS & PROPERTIES
SCALE: N.T.S.

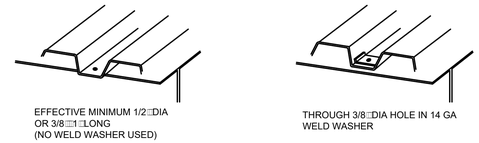

WELDS TO SUPPORT

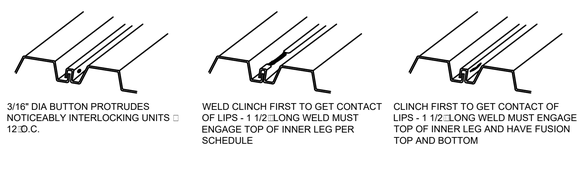

SIDE LAP FASTENING

6 TYPICAL METAL DECK WELDING
SCALE: N.T.S.

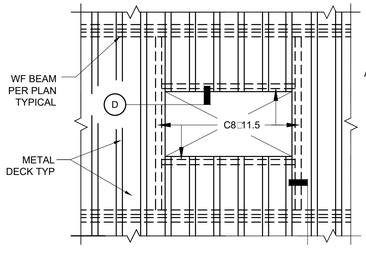

A OPENING GREATER THAN 18" TO 60"

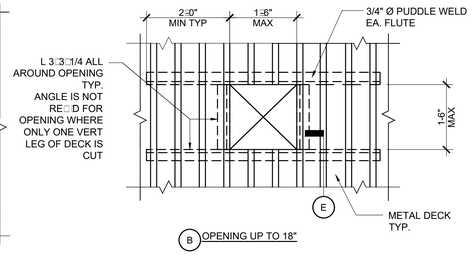

B OPENING UP TO 18"

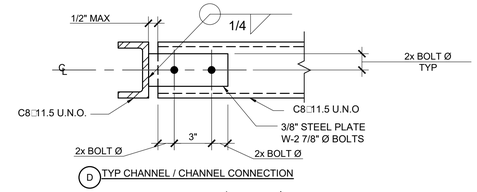

D TYP CHANNEL / CHANNEL CONNECTION

NOTES:

1. FRAMING AROUND DECK OPENINGS TO BE FURNISHED AND INSTALLED BY STRUCTURAL STEEL CONTRACTOR.
2. PROVIDE CONT BENT PLATE ALL AROUND OPENINGS AT ROOF EXHAUST FAN, DUCT & PIPE PENETRATIONS, GRAVITY RELIEF VENT, & WHERE SHOWN ON MEP DRAWINGS, SEE F
3. FOR OPENINGS GREATER THAN 60" SEE FRAMING PLAN FOR FRAMING SIZE (USE W12X19 U.N.O.)
4. NOT ALL FRAMING SHOWN ON PLAN.

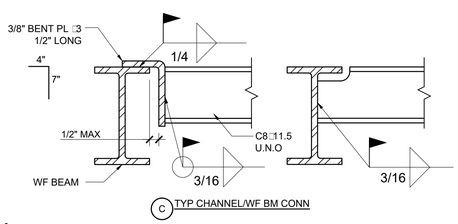

C TYP CHANNEL/WF BM CONN

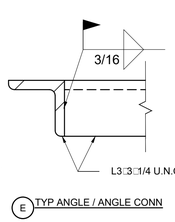

E TYP ANGLE / ANGLE CONN

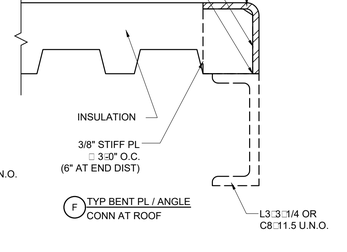

F TYP BENT PL / ANGLE CONN AT ROOF

7 TYPICAL FRAMING AT OPENING IN STEEL DECK
SCALE: N.T.S.

9 DETAIL
SCALE: N.T.S.

BUREAU OF ENGINEERING
OFFICIAL RECORD

VCA ENGINEERS, INC.
CIVIL • STRUCTURAL • MECHANICAL
2151 Michelson Dr. #240
Irvine, CA 92612
Tel. 949.679.0870
Fax. 949.679.9370
Project No. D312

BUREAU OF ENGINEERING
CITY OF LOS ANGELES

NO.	REVISION DESCRIPTION	DATE	BY

BUILDING NO. -

INDEX NO. RP-300118

REGISTERED PROFESSIONAL ENGINEER
DOUGLAS KEUN WU
No. S4029
EXP. 9/30/20
STRUCTURAL
STATE OF CALIFORNIA

DEPARTMENT OF PUBLIC WORKS
CITY OF LOS ANGELES

GARY LEE MOORE, PE, ENV SP
CITY ENGINEER

	DATE:
ARCHITECTURAL DIVISION	
ARCHITECT/ENGINEER: JHON SPARANO LIC. NO.: LICENSE	11/01/18
DESIGNED BY: SPARANO □ MOONEY ARCHITECTURE	11/01/18
DRAWN BY: ALEX. □	11/01/18
CHECKED BY: YOUNG, NAM	11/01/18
APPROVED BY:	

VERTICAL CONTROL:
HORIZONTAL CONTROL:

SHEET TITLE: TYPICAL DETAILS

PROJECT: GRANADA HILLS POOL AND BATH HOUSEREPLACEMENT PROJECT

ADDRESS: 16730 CHATSWORTH STREETGRANADA HILLS, CA 91344

BID SET
PROJECT ISSUE DATE: 06/22/21

WORK ORDER NO. #E170517

PLAN FILE NO.

DRAWING NO. S1.05
SHEET OF SHEETS

THE CITY OF LOS ANGELES OR ITS OFFICERS OR AGENTS SHALL NOT BE RESPONSIBLE FOR THE ACCURACY OR COMPLETENESS OF ELECTRONIC COPIES OF THIS PLAN SHEET.

TTLB TEMPLATE REVISION DATE: 02/2013
SHEET ISSUE DATE: 04/08/14
FILE PATH: C:\Users.Y□in Do□□ents.$-GRANADA HILL-V17_Y□in.rvt

REVISION DATES (DESIGN STAGE ONLY)

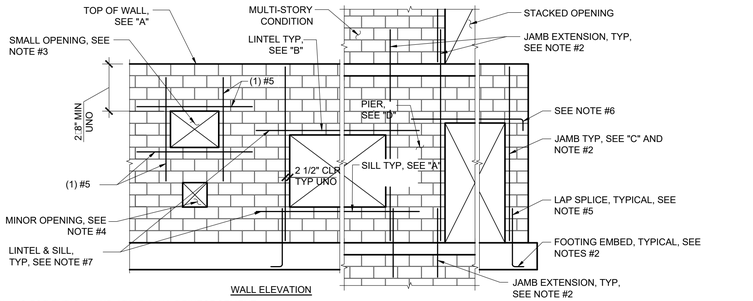

WALL ELEVATION

NOTES:
1. SEE PLANS FOR TYPICAL AND ADDITIONAL REINFORCEMENT.
2. FOR OPENINGS 36" OR LARGER IN WIDTH USE FULL HEIGHT JAMB BARS. EXTEND TO TOP OF WALL AT UPPER/SINGLE STORY, 48D MIN PAST FLOOR AND INTO FOOTING.
3. AT OPENINGS LESS THAN 36" IN WIDTH, EXTEND JAMB BARS 48D PAST EDGE OF OPENING.
4. FOR MINOR OPENINGS THAT DO NOT INTERRUPT TYPICAL REINF, ARE NO LARGER THAN 24" S□, AND ARE AT LEAST 24" FROM ADJACENT OPENINGS OR WALL EDGE, NO ADDITIONAL REINF IS RE□D UNO ON PLANS.
5. USE A TYPICAL LAP SPLICE UNO ON PLANS.
6. WHERE FULL EXTENSION IS NOT POSSIBLE, EXTEND BARS AS FAR AS POSSIBLE AND USE A STD HOOK.
7. EXTEND LINTEL AND SILL BARS 48D MINIMUM PAST EDGE OF OPENING.
8. AT FULL HEIGHT JAMB BARS, THE WEB AND SHELL MAY BE REMOVED TO FACILITATE INSTALLATION. THE CONTRACTOR SHALL ENSURE THAT GROUTING WILL NOT BE COMPROMISED IF THIS OPTION IS USED.

1 TYPICAL MINIMUM REINFORCEMENT FOR MASONRY OPENINGS
SCALE: N.T.S.

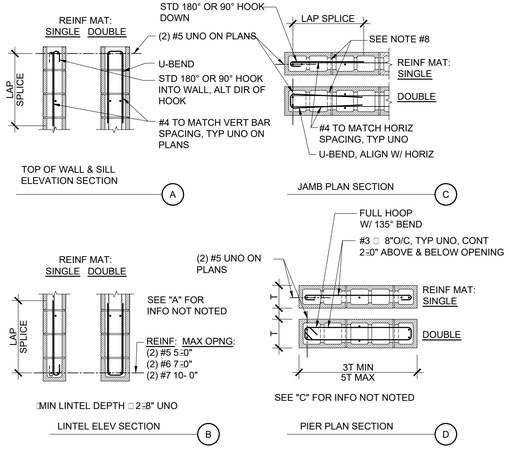

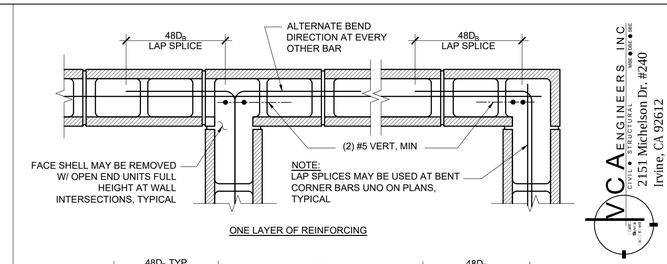

ONE LAYER OF REINFORCING

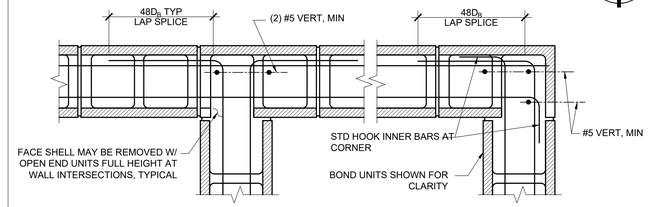

TWO LAYERS OF REINFORCING

3 CONCRETE MASONRY WALL INTERSECTION
SCALE: N.T.S.

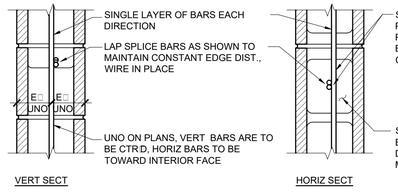

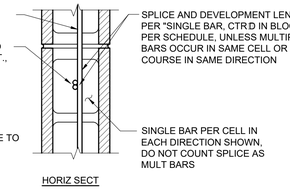

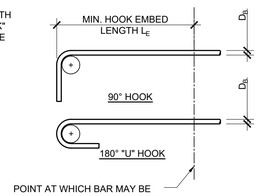

BAR SIZE	STD HOOK L_E (IN)	$48D_B$ (IN)	$72D_B$ (IN)	LAP SPLICE & DEVELOP LENGTH L_D (IN) UNO	
				EDGE BAR/ MULT BARS	SINGLE BAR, CTR□D
ALL CMU					
#3	5	18	27	18	18
#4	7	24	36	36	36
#5	8	30	45	45	45
#6	10	36	54	54	54
#7	12	42	63	63	63
#8	13	48	72	72	72
#9	15	54	81	81	81

NOTES:
1. VALUES SHOWN ARE FOR GRADE 60 REINF DEVELOPED IN CMU.
2. REFER TO TYPICAL REINFORCEMENT DETAILS FOR INFO NOT SHOWN, AND FOR DEVELOPMENT IN CONCRETE.
3. LAP SPLICES OF REINFORCEMENT WITH WORKING STRESS LEVELS HIGHER THAN 80□ FS SHALL BE $72D_B$ LONG, OTHERWISE $48D_B$ MAY BE USED. LAP SPLICES SHOWN ON THIS SCHEDULE AND THESE PLANS ARE BASED ON THIS RULE.

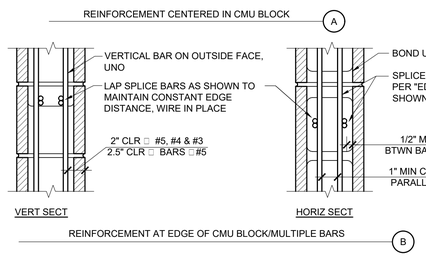

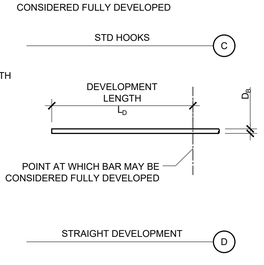

4 TYPICAL CMU REINFORCEMENT DETAILS & DEVELOPMENT LENGTHS
SCALE: N.T.S.

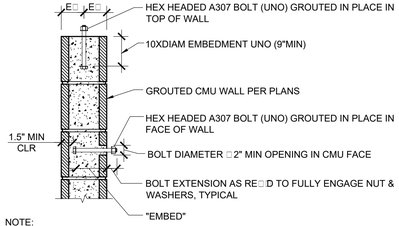

NOTE:
UNLESS DETAILED ON THESE PLANS, DO NOT PLACE BOLTS IN FACE OF WALL □12 DIAM FROM OPENINGS OR EDGES WITHOUT APPROVAL FROM SEOR

MINIMUM EMBEDMENT TABLE					
DIAMETER OF BOLTS IN INCHES	1/2	5/8	3/4	7/8	1
EMBEDMENT IN INCHES (EMBED)	4	5	6	7	8
MIN. CMU WALL THICKNESS (INCHES)	6"	8"	8"	10"	12"

NOTES:
1. BOLTS CAST-IN MASONRY SHALL BE GROUTED IN PLACE WITH 1" OF GROUT BETWEEN BOLT AND MASONRY.
2. BOLTS SHALL BE A307 HEADED MACHINE BOLTS OR A36 ROD W/TACK WELDED HEX NUT.

7 HEADED BOLT GROUTED INTO CMU WALL
SCALE: N.T.S.

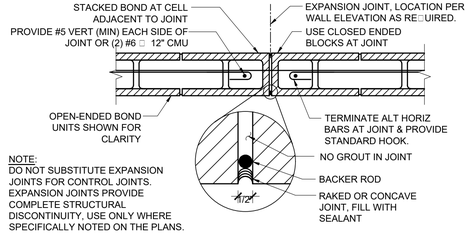

NOTE:
DO NOT SUBSTITUTE EXPANSION JOINTS FOR CONTROL JOINTS. EXPANSION JOINTS PROVIDE COMPLETE STRUCTURAL DISCONTINUITY, USE ONLY WHERE SPECIFICALLY NOTED ON THE PLANS.

CMU WALL EXPANSION JOINT

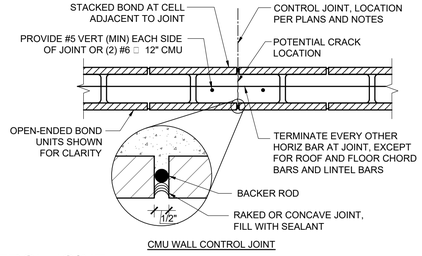

CMU WALL CONTROL JOINT

8 CMU WALL EXPANSION AND CONTROL JOINT
SCALE: N.T.S.

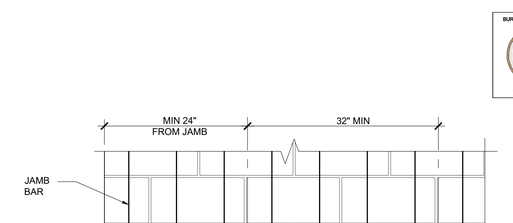

LAP SCHEDULE	
REBAR SIZE (GR 60)	LAP LENGTH
#4	36"
#5	45"
#6	54"
#7	63"
#8	72"

NOTES:
1. ALL VERTICAL REINFORCING FOR COLUMNS, PIERS AND WALLS SHALL BE DOWELED AS SHOWN EXCEPT SPECIFIC DETAILS OF DRAWINGS SHALL GOVERN IN CASES OF CONFLICT.
2. DOWELS SHALL BE THE SAME GRADE, SIZE AND NUMBER AS VERTICAL REINF.

6 TYPICAL DOWELS AT CMU WALL
SCALE: N.T.S.

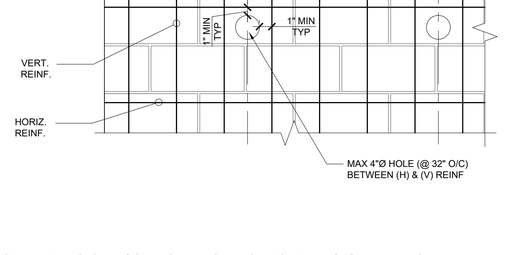

9 ALLOWED LOCATION OF HOLES FOR UTILITY, ETC
SCALE: N.T.S.

BUREAU OF ENGINEERING
OFFICIAL RECORD

VCA ENGINEERS, INC.
CIVIL • STRUCTURAL
2151 Michelson Dr. #240
Irvine, CA 92612
Tel. 949.679.0870
Fax. 949.679.9370
Project No. D312

BUREAU OF ENGINEERING
CITY OF LOS ANGELES
DEPARTMENT OF PUBLIC WORKS

NO.	REVISION DESCRIPTION	DATE	BY

BUILDING NO. -
INDEX NO. RP-300118

REGISTERED PROFESSIONAL ENGINEER DOUGLAS KEUN WING
No. S4029
EXP. 9/30/20
STRUCTURAL
STATE OF CALIFORNIA

CITY ENGINEER

	DATE:
VERTICAL CONTROL:	11/01/18
HORIZONTAL CONTROL:	11/01/18
SHEET TITLE: TYPICAL DETAILS	11/01/18
PROJECT: GRANADA HILLS POOL AND BATH HOUSEREPLACEMENT PROJECT	11/01/18
ADDRESS: 16730 CHATSWORTH STREETGRANADA HILLS, CA 91344	11/01/18

GARY LEE MOORE, PE, ENV SP
ARCHITECTURAL DIVISION

ARCHITECTENGINEER: JHON SPARANO LIC. NO.: LICENSE
DESIGNED BY: SPARANO □ MOONEY ARCHITECTURE
DRAWN BY: ALEX. □
CHECKED BY: YOUNG, NAM
APPROVED BY:

BID SET
PROJECT ISSUE DATE: 06/22/21

WORK ORDER NO. #E170517
PLAN FILE NO.
DRAWING NO. S1.06
SHEET OF SHEETS

REVISION DATES (DESIGN STAGE ONLY)

THE CITY OF LOS ANGELES OR ITS OFFICERS OR AGENTS SHALL NOT BE RESPONSIBLE FOR THE ACCURACY OR COMPLETENESS OF ELECTRONIC COPIES OF THIS PLAN SHEET.

TTLB TEMPLATE REVISION DATE: 02/2013
SHEET ISSUE DATE: 04/08/14
FILE PATH: C:\Users Y□ in Do□□ents S-GRANADA HILL-V17_Y□in.rvt

FOUNDATION NOTES:

1. FOR GENERAL NOTES, SEE S0.00 SERIES.
2. FOR TYPICAL DETAILS, SEE S1.00 SERIES.
3. ONLY RETAINING WALL & BUILDING FOOTING ARE SHOWN ON THIS SHEET. FOR OTHER FOOTING SEE REFERENCED SHEETS OR ARCHT'L / CIVIL DRAWINGS.

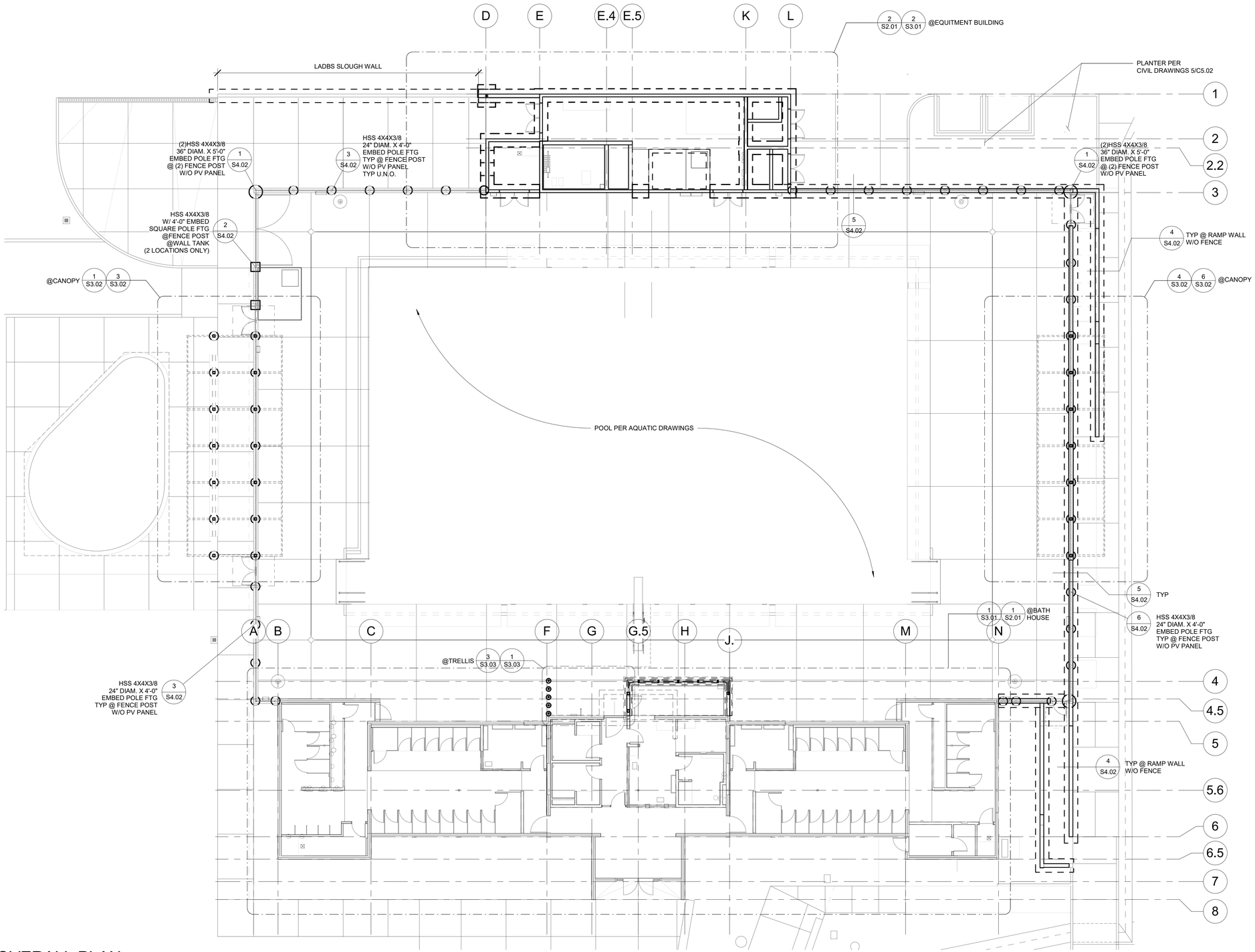

1 OVERALL PLAN
SCALE: 3/32" = 1'-0"

This has been reviewed by the Bureau of Engineering, Geotechnical Engineering Division and found to be in conformance with our recommendations in the reports dated August 22, 2017, October, 25 2018 and February 18, 2020

RCE/GE DATE

BID SET
PROJECT ISSUE DATE: 06/22/21

VCA ENGINEERS, INC.
CIVIL • STRUCTURAL
2151 Michelson Dr. #240
Irvine, CA 92612
Tel. 949.679.0870
Fax. 949.679.9370
Project No. D312

BUREAU OF ENGINEERING
OFFICIAL RECORD

DEPARTMENT OF PUBLIC WORKS
CITY OF LOS ANGELES
ENGINEERING
BUREAU OF ENGINEERING

GARY LEE MOORE, PE, ENV SP
CITY ENGINEER

ARCHITECTURAL DIVISION
ARCHITECT/ENGINEER: JHON SPARANO LIC. NO.: LICENSE
DESIGNED BY: SPARANO + MOONEY ARCHITECTURE
DRAWN BY: ALEX. Q
CHECKED BY: YOUNG, NAM
APPROVED BY:

NO.	REVISION DESCRIPTION	DATE	BY

BUILDING NO. -
INDEX NO. RP-300118

REGISTERED PROFESSIONAL ENGINEER KEUN NAM No. S4029 Exp. 9/30/20 STRUCTURAL STATE OF CALIFORNIA

VERTICAL CONTROL:
HORIZONTAL CONTROL:
SHEET TITLE: OVERALL SITE PLAN
PROJECT: GRANADA HILLS POOL AND BATH HOUSE REPLACEMENT PROJECT
ADDRESS: 16730 CHATSWORTH STREET GRANADA HILLS, CA 91344

WORK ORDER NO. #E170517
PLAN FILE NO.
DRAWING NO. S2.00
SHEET OF SHEETS

PLOTTED:2/28/2020 6:21:27 PM

THE CITY OF LOS ANGELES OR ITS OFFICERS OR AGENTS SHALL NOT BE RESPONSIBLE FOR THE ACCURACY OR COMPLETENESS OF ELECTRONIC COPIES OF THIS PLAN SHEET.

REVISION DATES (DESIGN & PAGE ONLY)

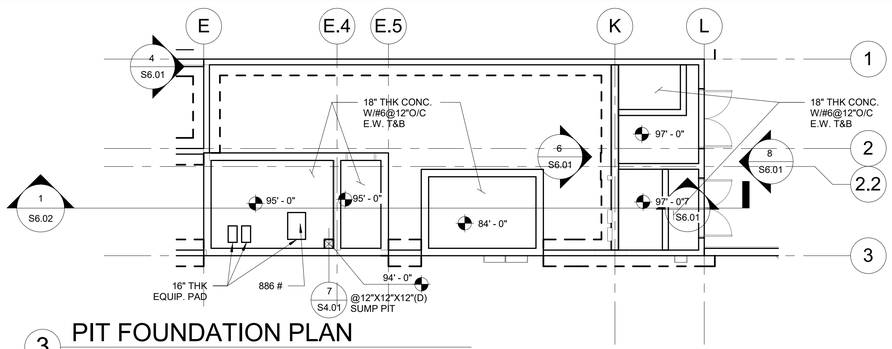

3 PIT FOUNDATION PLAN

SCALE: 1/8" = 1'-0"

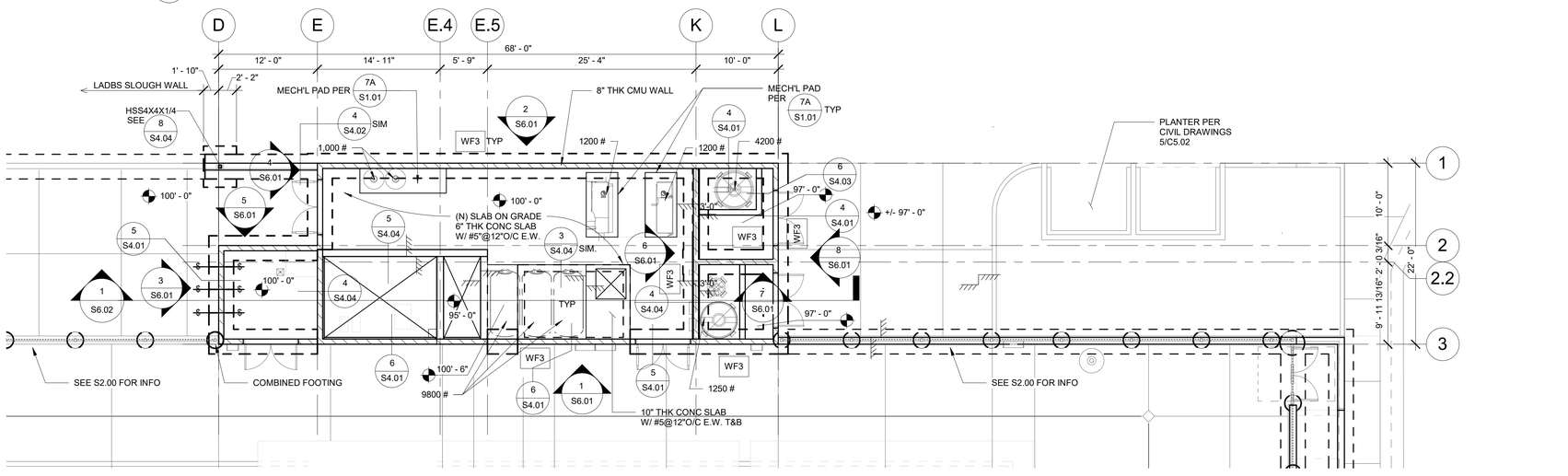

2 EQUIP BLDG FOUNDATION PLAN

SCALE: 1/8" = 1'-0"

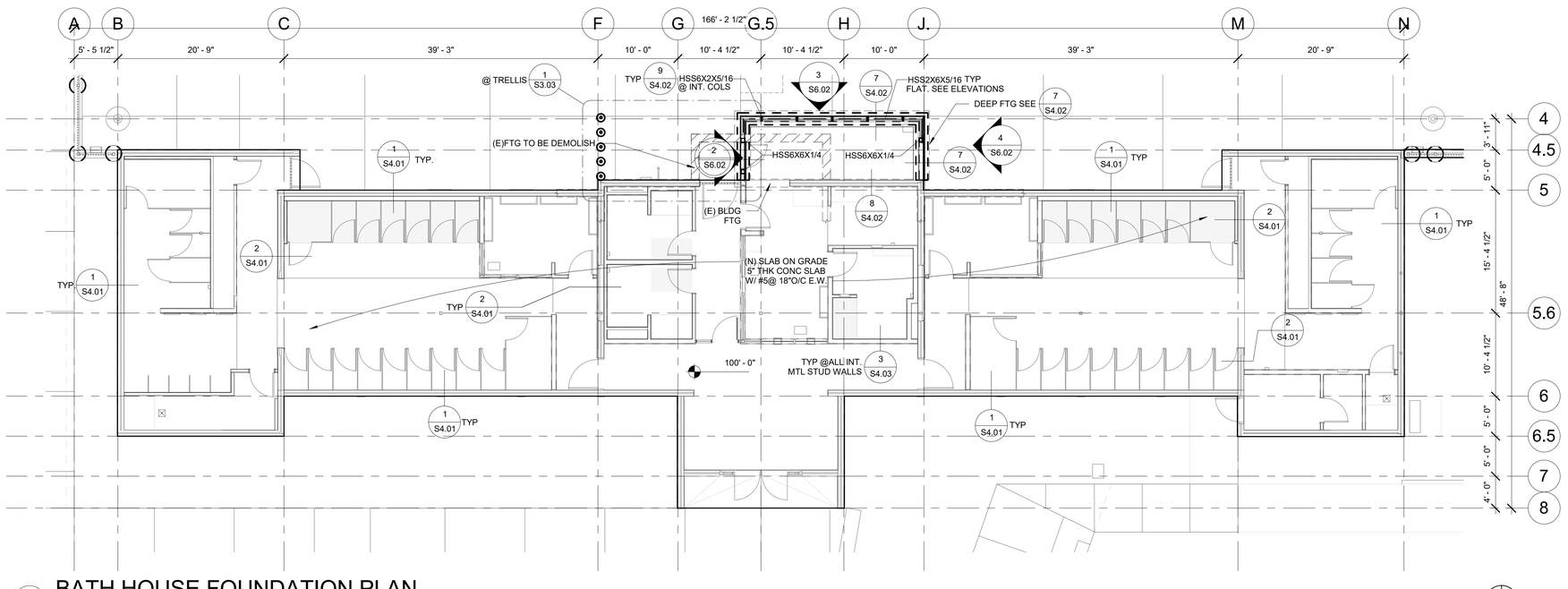

1 BATH HOUSE FOUNDATION PLAN

SCALE: 1/8" = 1'-0"

FOUNDATION NOTES:

1. FOR GENERAL NOTES, SEE S0.00 SERIES.
2. FOR TYPICAL DETAILS, SEE S1.00 SERIES.
3. 8" THK CMU WALL. SEE ELEV FOR ADDITIONAL INFORMAITON.
4. CONC. WALL. SEE PLAN DETAILS.
5. SEE DETAIL ON SHEETS S-1.04 AND S-1.04A FOR ALL INTERIOR METAL STUDS WALL CONSTRUCTION.
6. NOT USED.
7. TOP OF FOOTING (T.O.F.)= 16" (U.N.O.)
8. FOR SLAB SAWCUT AND CONTROL JOINT, SEE DETAIL 6/S1.01
9. WF - # INDICATES WALL FOOTING
10. $ ——— $ INDICATES STEP IN FOOTING
11. INDICATES STEP IN SLAB.
12. INDICATES RECESS ON SLAB.
13. SEE DETAIL 7/S1.01 FOR CURB ON SLAB. CURB LOCATIONS PER ARCHT'L.

WALL FOOTING SCHEDULE				
MARK	DIMENSIONS		REINFORCEMENT	
	WIDTH	DEPTH	LONG. T&B	TIES
WF3	3'-0"	18"	(3)#5	#4@16"O/C

VCA ENGINEERS, INC.
CIVIL • STRUCTURAL
2151 Michelson Dr. #240
Irvine, CA 92612
Tel. 949.679.0870
Fax. 949.679.9370
Project No. D312

BUREAU OF ENGINEERING
OFFICIAL RECORD

This has been reviewed by the Bureau of Engineering, Geotechnical Engineering Division and found to be in conformance with our recommendations in the reports dated August 22, 2017, October, 25 2018 and February 18, 2020

RCE/GE DATE

BID SET
PROJECT ISSUE DATE: 06/22/21

CITY OF LOS ANGELES
DEPARTMENT OF PUBLIC WORKS
BUREAU OF ENGINEERING
ENGINEERING
CITY OF LOS ANGELES

NO.	REVISION DESCRIPTION	DATE	BY

BUILDING NO. -
INDEX NO. RP-300118

REGISTERED PROFESSIONAL ENGINEER KEUN K. KWON No. S4029 Exp. 9/30/20 STRUCTURAL STATE OF CALIFORNIA

GARY LEE MOORE, PE, ENV SP CITY ENGINEER
ARCHITECTURAL DIVISION
ARCHITECT/ENGINEER: JHON SPARANO LIC. NO.: LICENSE
DESIGNED BY: SPARANO + MOONEY ARCHITECTURE
DRAWN BY: ALEX. Q
CHECKED BY: YOUNG, NAM
APPROVED BY: Approver
DATE: 12/01/19

VERTICAL CONTROL:
HORIZONTAL CONTROL:
SHEET TITLE: FOUNDATION PLAN
PROJECT: GRANADA HILLS POOL AND BATH HOUSE REPLACEMENT PROJECT
ADDRESS: 16730 CHATSWORTH STREET GRANADA HILLS, CA 91344

WORK ORDER NO. #E170517
PLAN FILE NO.
DRAWING NO. S2.01
SHEET O F SHEETS

PLOTTED:2/28/2020 6:21:29 PM

THE CITY OF LOS ANGELES OR ITS OFFICERS OR AGENTS SHALL NOT BE RESPONSIBLE FOR THE ACCURACY OR COMPLETENESS OF ELECTRONIC COPIES OF THIS PLAN SHEET.

REVISION DATES (FOR AUTHORIZED USE ONLY)

ROOF FRAMING NOTES:

1. FOR GENERAL NOTES, SEE S0.00 SERIES.
2. FOR TYPICAL DETAILS, SEE S1.00 SERIES.
3. 8" THK CMU. WALL (WHERE INDICATES WALL BELOW)
4. METAL DECK SEE 4/S1.05 FOR ADDITIONAL INFORMATION.

METAL DECK SCHEDULE

DECK MARK	DEPTH	TYPE (LARR#23789)	GAGE	I (IN⁴/FT)	S(TOP+) (IN³/FT)	S(BOT-) (IN³/FT)	TOTAL DEPTH(IN)	CONC FILL TYPE	REINF.	WELDED STUD
D1	1 1/2"	VERCO W3 HSB36	18	0.305	0.318	0.768	-	-	-	-

5. FOR TYPICAL STEEL BEAM TO BEAM CONNECTIONS, SEE DETAIL 2/S1.03
6. NOT USED
7. DENOTES JOIST (APPROX. LENGTH SHOWN)
   DENOTES ETENT OF JOISTS
8. 1/2" STRUCT I PLYWOOD W/ #10 SCREWS @ 6,6,12 O/C (E.B.F.) U.N.O. BLOCK ALL PLYWOOD EDGES.
9. PROVIDE 6X POST UNDER ALL BEAMS. WIDTH TO MATCH BEAM WIDTH.
10. INDICATES 2X6 @ 16" O/C PARAPET STUD WALL,
    INDICATES WALL BELOW
11. ALLIGN JOIST DIRECTLY ABOVE WALL STUDS.
12. DENOTES ROOF PENETRATION.
    SEE ARCHT'L/MEP DRAWINGS FOR ACTUAL LOCATION & ADDITIONAL INFO & ADDITIONAL PENETRATIONS.
    FRAMING AT METAL DECK ROOF SEE 7/S1.05
    FRAMING AT WOOD ROOF SEE 3/S5.02
13. ALL PIPE SUPPORTS SHALL CONNECT DIRECTLY TO STEEL BEAMS OR UNISTRUTS SUPPORTED BY STEEL BEAMS SEE OPM-0052-13
14. WF BEAMS TO BE SPACED AT 8' O/C MAX, U.N.O. ON PLAN

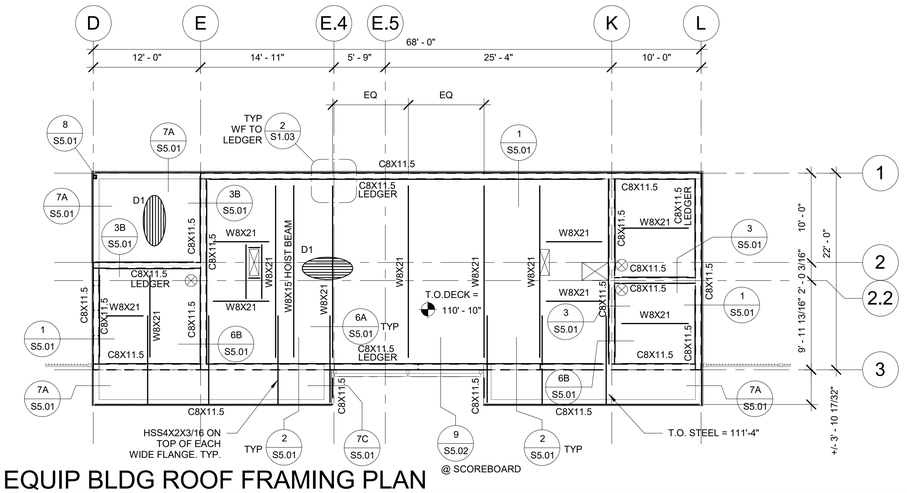

2 EQUIP BLDG ROOF FRAMING PLAN

SCALE: 1/8" = 1'-0"

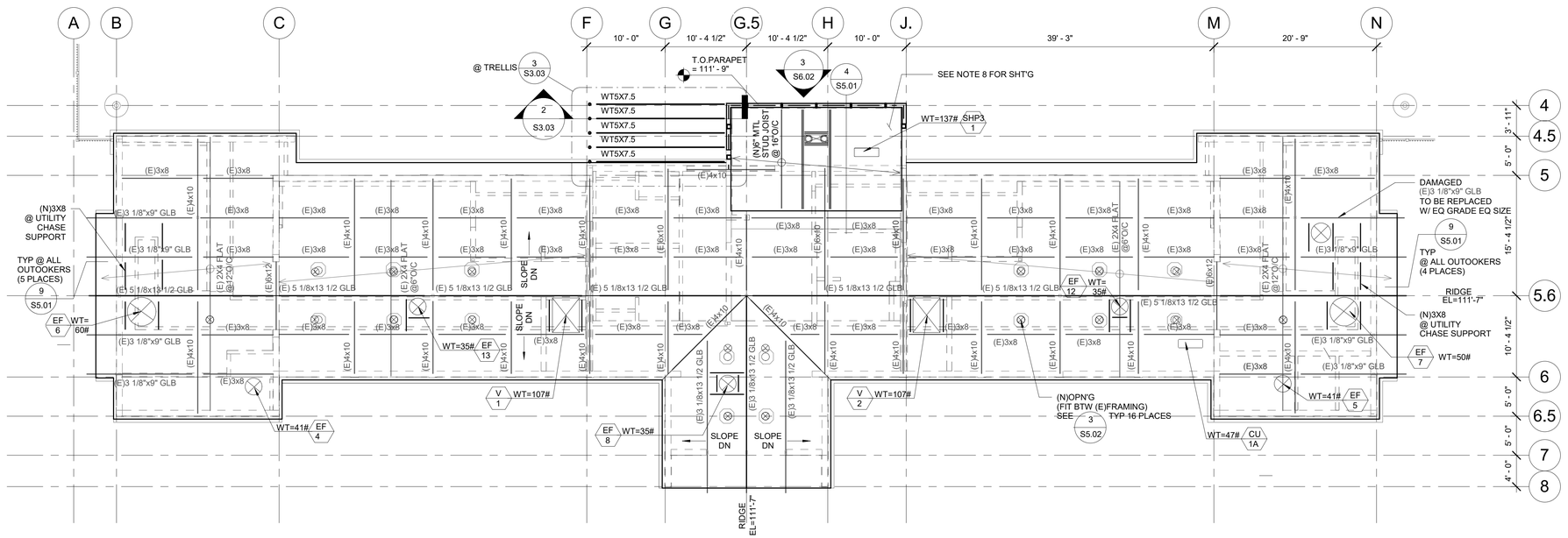

1 BATH HOUSE ROOF FRAMING PLAN

SCALE: 1/8" = 1'-0"

VCA ENGINEERS, INC.
CIVIL • STRUCTURAL
2151 Michelson Dr. #240
Irvine, CA 92612
Tel. 949.679.0870
Fax. 949.679.9370
Project No. D312

BUREAU OF ENGINEERING
OFFICIAL RECORD

This has been reviewed by the Bureau of Engineering, Geotechnical Engineering Division and found to be in conformance with our recommendations in the reports dated August 22, 2017, October, 25 2018 and February 18, 2020

RCE/GE DATE

BID SET
PROJECT ISSUE DATE: 06/22/21

CITY OF LOS ANGELES
DEPARTMENT OF PUBLIC WORKS
BUREAU OF ENGINEERING
ENGINEERING
CITY OF LOS ANGELES

NO.	REVISION DESCRIPTION	DATE	BY

BUILDING NO. -
INDEX NO. RP-300118

REGISTERED PROFESSIONAL ENGINEER KEUN NAM No. S4029 Exp. 9/30/20 STRUCTURAL STATE OF CALIFORNIA

CITY ENGINEER DATE: 12/01/19
GARY LEE MOORE, PE, ENV SP
ARCHITECTURAL DIVISION
ARCHITECT/ENGINEER: JHON SPARANO LIC. NO.: LICENSE
DESIGNED BY: SPARANO + MOONEY ARCHITECTURE
DRAWN BY: ALEX Q
CHECKED BY: YOUNG, NAM
APPROVED BY: Approver

VERTICAL CONTROL:
HORIZONTAL CONTROL:
SHEET TITLE: ROOF FRAMING PLAN
PROJECT: GRANADA HILLS POOL AND BATH HOUSE REPLACEMENT PROJECT
ADDRESS: 16730 CHATSWORTH STREET GRANADA HILLS, CA 91344

WORK ORDER NO. #E170517
PLAN FILE NO.
DRAWING NO. S3.01
SHEET O F SHEETS

PLOTTED:2/28/2020 6:21:30 PM

REVISION DATES (DESIGN & PAGE ONLY)

THE CITY OF LOS ANGELES OR ITS OFFICERS OR AGENTS SHALL NOT BE RESPONSIBLE FOR THE ACCURACY OR COMPLETENESS OF ELECTRONIC COPIES OF THIS PLAN SHEET.

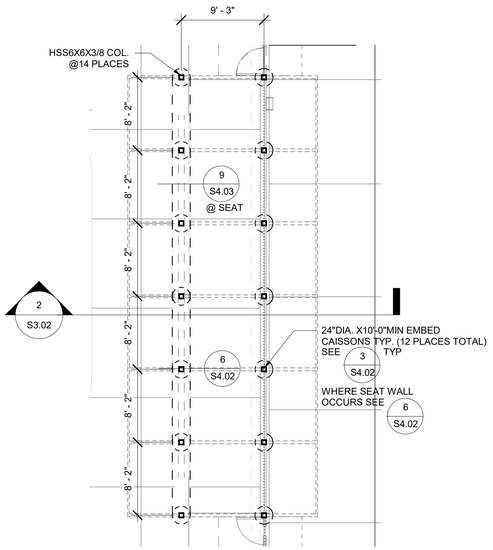

1 CANOPY1 FOUNDATION PLAN

SCALE: 1/8" = 1'-0"

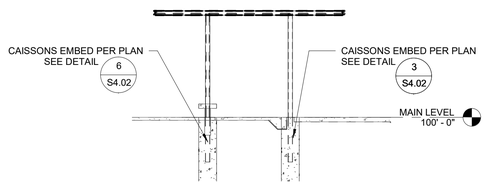

2 CANOPY1 SECTION

SCALE: 1/8" = 1'-0"

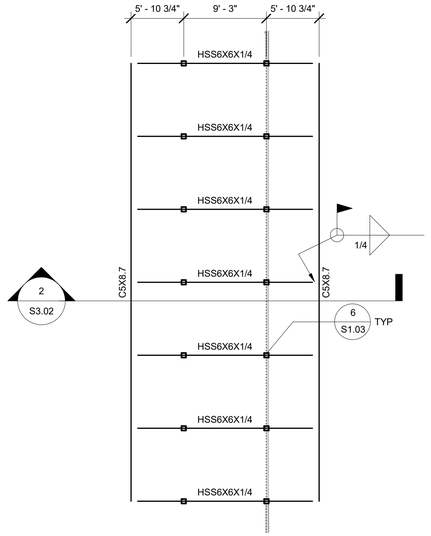

3 CANOPY1 ROOF FRAMING PLAN

SCALE: 1/8" = 1'-0"

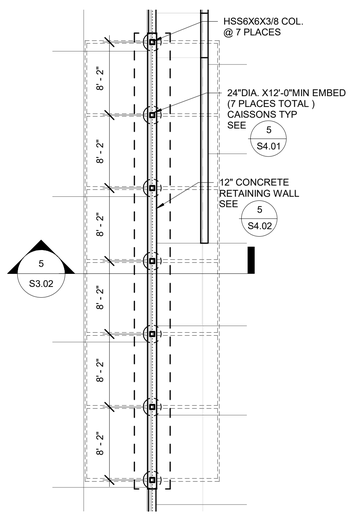

4 CANOPY2 FOUNDATION PLAN

SCALE: 1/8" = 1'-0"

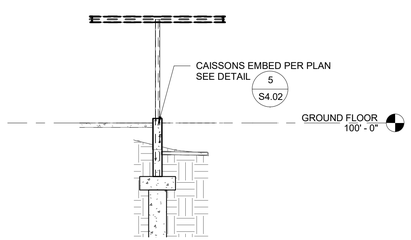

5 CANOPY2 SECTION

SCALE: 1/8" = 1'-0"

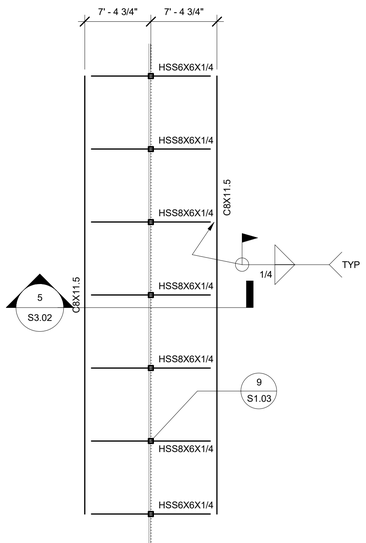

6 CANOPY2 ROOF FRAMING PLAN

SCALE: 1/8" = 1'-0"

BUREAU OF ENGINEERING
OFFICIAL RECORD

This has been reviewed by the Bureau of Engineering, Geotechnical Engineering Division and found to be in conformance with our recommendations in the reports dated August 22, 2017, October, 25 2018 and February 18, 2020

RCE/GE DATE

N

VCA ENGINEERS, INC.
CIVIL • STRUCTURAL
2151 Michelson Dr. #240
Irvine, CA 92612
Tel. 949.679.0870
Fax. 949.679.9370
Project No. D312

DEPARTMENT OF PUBLIC WORKS
BUREAU OF ENGINEERING
CITY OF LOS ANGELES

ENGINEERING
CITY OF LOS ANGELES

NO.	REVISION DESCRIPTION	DATE	BY

BUILDING NO. -

INDEX NO. RP-300118

REGISTERED PROFESSIONAL ENGINEER KEUN NAM No. S4029 Exp. 9/30/20 STRUCTURAL STATE OF CALIFORNIA

GARY LEE MOORE, PE, ENV SP
CITY ENGINEER DATE: 12/01/19

ARCHITECTURAL DIVISION
ARCHITECT/ENGINEER: JHON SPARANO LIC. NO.: LICENSE
DESIGNED BY: SPARANO + MOONEY ARCHITECTURE
DRAWN BY: ALEX. Q
CHECKED BY: YOUNG, NAM
APPROVED BY: Approver

VERTICAL CONTROL:
HORIZONTAL CONTROL:

SHEET TITLE: CANOPY FOUNDATION & ROOF FRAMING PLANS

PROJECT: GRANADA HILLS POOL AND BATH HOUSE REPLACEMENT PROJECT

ADDRESS: 16730 CHATSWORTH STREET GRANADA HILLS, CA 91344

BID SET
PROJECT ISSUE DATE: 06/22/21

WORK ORDER NO. #E170517

PLAN FILE NO.

DRAWING NO. S3.02

SHEET O F SHEETS

PLOTTED:2/28/2020 6:21:34 PM

THE CITY OF LOS ANGELES OR ITS OFFICERS OR AGENTS SHALL NOT BE RESPONSIBLE FOR THE ACCURACY OR COMPLETENESS OF ELECTRONIC COPIES OF THIS PLAN SHEET.

REVISION DATES (DESIGN & PLOT ONLY)

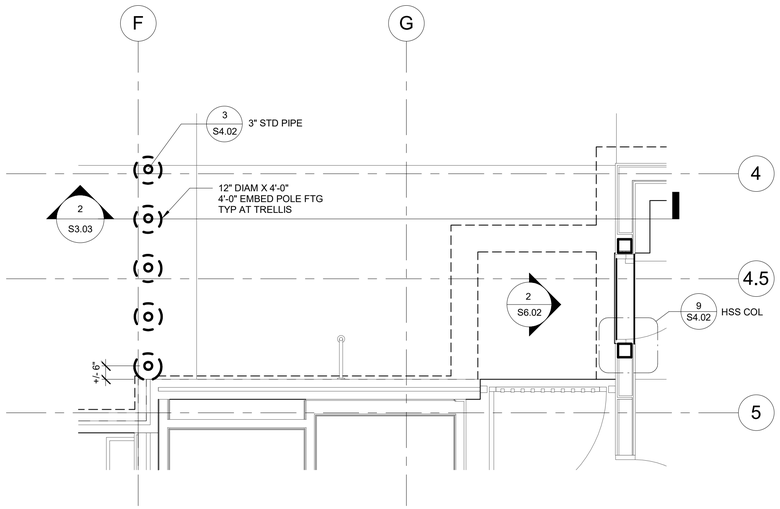

1 TRELLIS FOUNDATION

SCALE: 3/8" = 1'-0"

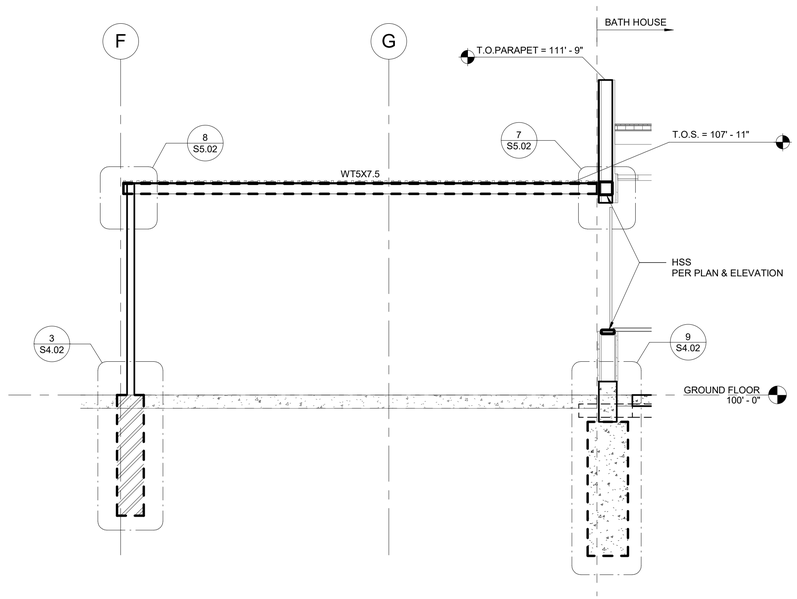

2 TRELLIS SECTION

SCALE: 3/8" = 1'-0"

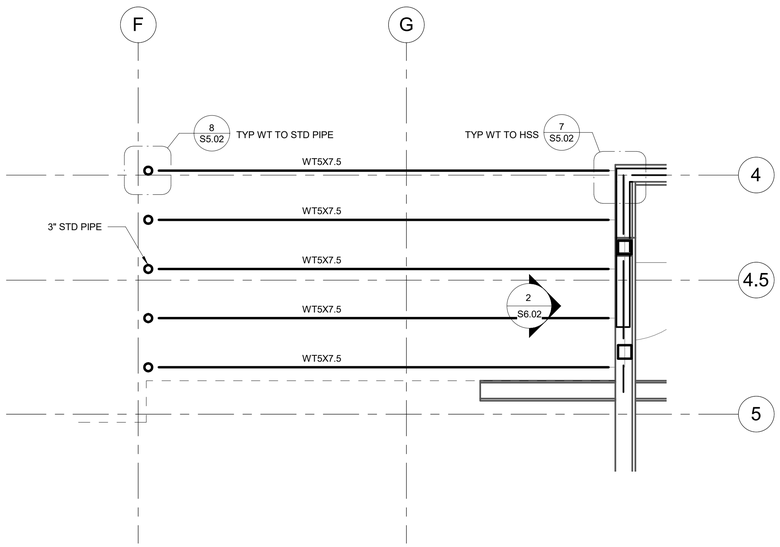

3 TRELLIS ROOF

SCALE: 3/8" = 1'-0"

VCA ENGINEERS, INC.
CIVIL • STRUCTURAL
2151 Michelson Dr. #240
Irvine, CA 92612
Tel. 949.679.0870
Fax. 949.679.9370
Project No. D312

BUREAU OF ENGINEERING
OFFICIAL RECORD

This has been reviewed by the Bureau of Engineering, Geotechnical Engineering Division and found to be in conformance with our recommendations in the reports dated August 22, 2017, October, 25 2018 and February 18, 2020

RCE/GE DATE

BID SET
PROJECT ISSUE DATE: 06/22/21

CITY OF LOS ANGELES
DEPARTMENT OF PUBLIC WORKS
BUREAU OF ENGINEERING
ENGINEERING
CITY OF LOS ANGELES

NO.	REVISION DESCRIPTION	DATE	BY

BUILDING NO. -

INDEX NO. RP-300118

REGISTERED PROFESSIONAL ENGINEER KEUN NAM No. S4029 Exp. 9/30/20 STRUCTURAL STATE OF CALIFORNIA

GARY LEE MOORE, PE, ENV SP
CITY ENGINEER
DATE: 12/01/19

ARCHITECTURAL DIVISION
ARCHITECT/ENGINEER: JHON SPARANO LIC. NO.: LICENSE
DESIGNED BY: SPARANO + MOONEY ARCHITECTURE 12/01/19
DRAWN BY: ALEX. Q 12/01/19
CHECKED BY: YOUNG, NAM 12/01/19
APPROVED BY: Approver 12/01/19

VERTICAL CONTROL:
HORIZONTAL CONTROL:

SHEET TITLE: TRELLIS PLAN & SECTION AND ELEVATIONS

PROJECT: GRANADA HILLS POOL AND BATH HOUSE REPLACEMENT PROJECT

ADDRESS: 16730 CHATSWORTH STREET GRANADA HILLS, CA 91344

WORK ORDER NO. #E170517

PLAN FILE NO.

DRAWING NO. S3.03

SHEET O F SHEETS

PLOTTED:2/28/2020 6:21:34 PM

THE CITY OF LOS ANGELES OR ITS OFFICERS OR AGENTS SHALL NOT BE RESPONSIBLE FOR THE ACCURACY OR COMPLETENESS OF ELECTRONIC COPIES OF THIS PLAN SHEET.

REVISION DATES (DESIGN & PAGE ONLY)

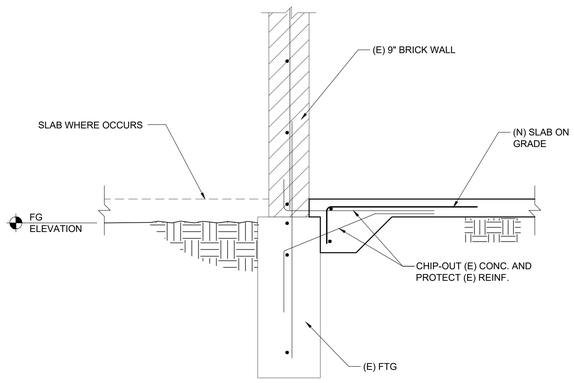

1 (N)SLAB □ (E)EXTERIOR WALL
SCALE: N.T.S.

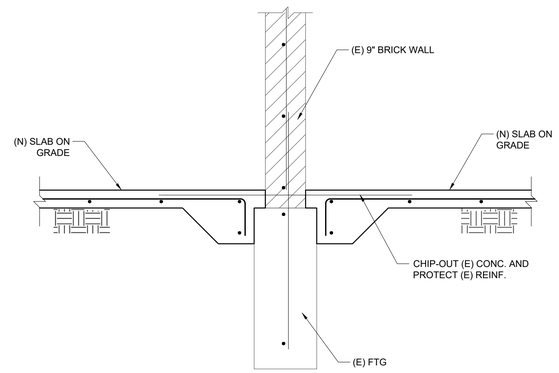

2 (N)SLAB □ (E)INTERIOR WALL
SCALE: N.T.S.

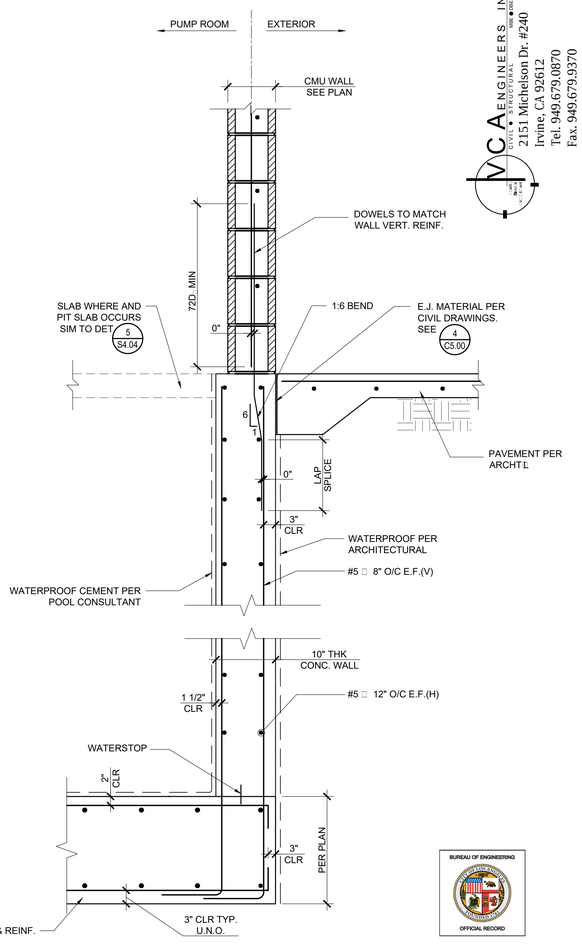

6 PIT AT PAVEMENT
SCALE: N.T.S.

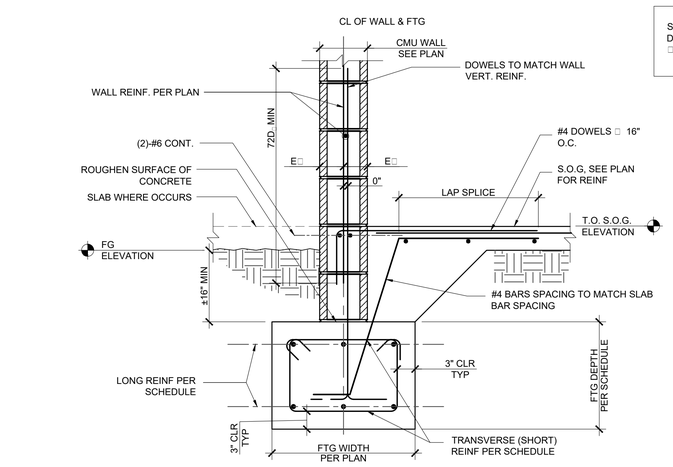

4 EXT. (N) CMU WALL FOOTING DETAIL
SCALE: N.T.S.

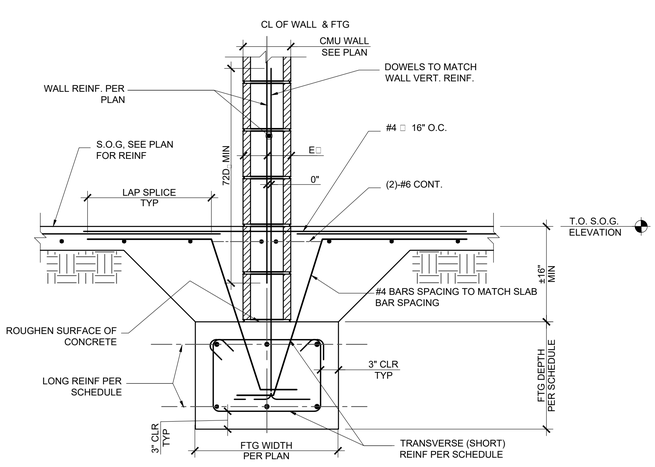

5 INT. (N) CMU WALL FOOTING DETAIL
SCALE: N.T.S.

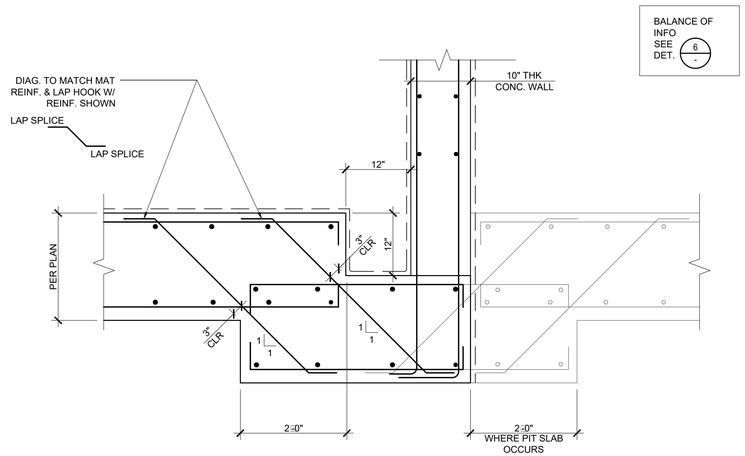

7 SUMP PIT
SCALE: N.T.S.

8 DETAIL
SCALE: N.T.S.

This has been reviewed by the Bureau of Engineering, Geotechnical Engineering Division and found to be in conformance with our recommendations in the reports dated August 22, 2017, October, 25 2018 and February 18, 2020

RCE/GE DATE

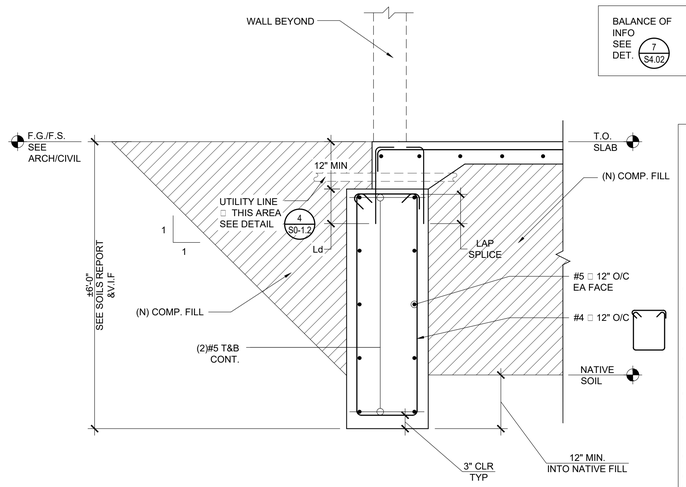

9 FOOTING □ DOOR
SCALE: N.T.S.

VCA ENGINEERS, INC.
CIVIL • STRUCTURAL • MECHANICAL
2151 Michelson Dr. #240
Irvine, CA 92612
Tel. 949.679.0870
Fax. 949.679.9370
Project No. D312

BUREAU OF ENGINEERING
OFFICIAL RECORD

DEPARTMENT OF PUBLIC WORKS
BUREAU OF ENGINEERING
CITY OF LOS ANGELES
ENGINEERING

NO.	REVISION DESCRIPTION	DATE	BY

BUILDING NO. -

INDEX NO. RP-300118

REGISTERED PROFESSIONAL ENGINEER — DOUGLAS KEUN KIM — No. S4029 — EXP. 9/30/20 — STRUCTURAL — STATE OF CALIFORNIA

CITY ENGINEER

	DATE:
	11/01/18
	11/01/18
	11/01/18
	11/01/18
	11/01/18

GARY LEE MOORE, PE, ENV SP
ARCHITECTURAL DIVISION

ARCHITECT/ENGINEER: JHON SPARANO LIC. NO.: LICENSE
DESIGNED BY: SPARANO □ MOONEY ARCHITECTURE
DRAWN BY: ALEX, □
CHECKED BY: YOUNG, NAM
APPROVED BY:

BID SET
PROJECT ISSUE DATE: 06/22/21

CITY OF LOS ANGELES
VERTICAL CONTROL:
HORIZONTAL CONTROL:

SHEET TITLE: FOUNDATION DETAILS

PROJECT: GRANADA HILLS POOL AND BATH HOUSEREPLACEMENT PROJECT

ADDRESS: 16730 CHATSWORTH STREETGRANADA HILLS, CA 91344

WORK ORDER NO. #E170517

PLAN FILE NO.

DRAWING NO. S4.01

SHEET OF SHEETS

THE CITY OF LOS ANGELES OR ITS OFFICERS OR AGENTS SHALL NOT BE RESPONSIBLE FOR THE ACCURACY OR COMPLETENESS OF ELECTRONIC COPIES OF THIS PLAN SHEET.

TTLB TEMPLATE REVISION DATE: 02/2013
SHEET ISSUE DATE: 04/08/14
FILE PATH: C:\Users\Y□in\Do□□ents\S-GRANADA HILL-V17_Y□in.rvt

REVISION DATES (DESIGN STAGE ONLY)

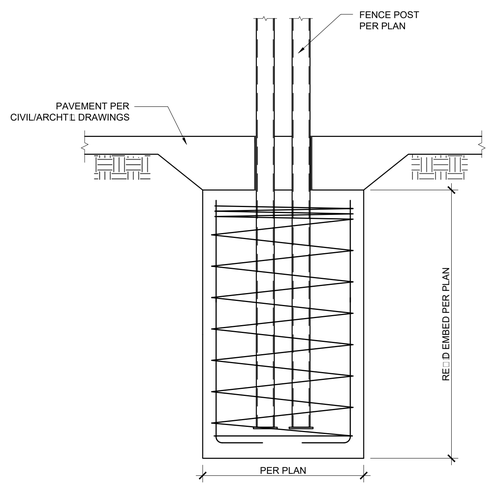

BALANCE OF INFO SEE DET. 3/-

1 FENCE POLE FTG □ (2) POSTS
SCALE: N.T.S.

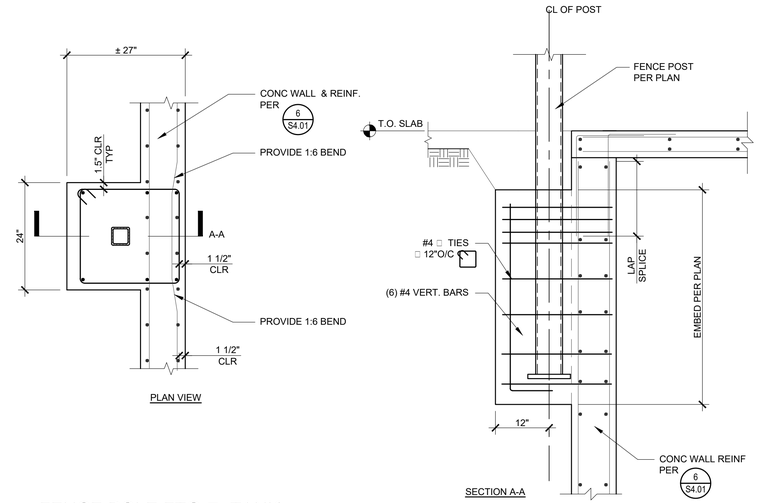

2 FENCE POLE FTG □ TANK
SCALE: N.T.S.

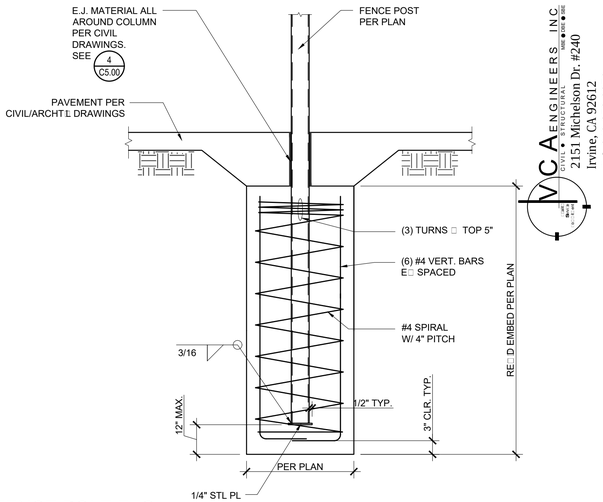

VCA ENGINEERS, INC.
CIVIL • STRUCTURAL • MEP
2151 Michelson Dr. #240
Irvine, CA 92612
Tel. 949.679.0870
Fax. 949.679.9370
Project No. D312

3 FENCE POLE FTG
SCALE: N.T.S.

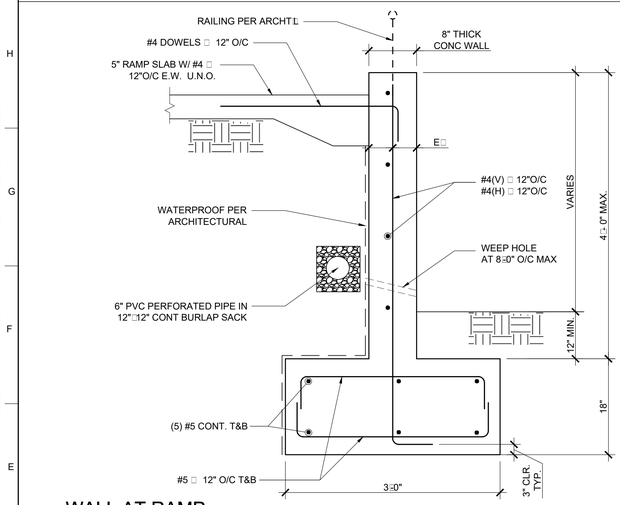

4 WALL AT RAMP
SCALE: N.T.S.

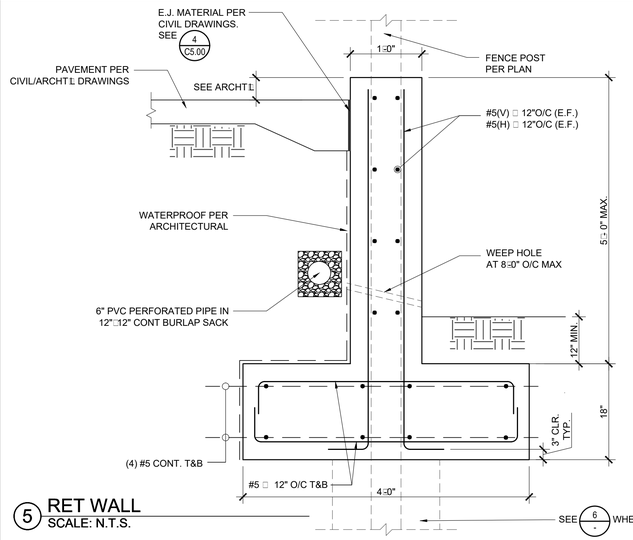

5 RET WALL
SCALE: N.T.S.

This has been reviewed by the Bureau of Engineering, Geotechnical Engineering Division and found to be in conformance with our recommendations in the reports dated August 22, 2017, October, 25 2018 and February 18, 2020

RCE/GE DATE

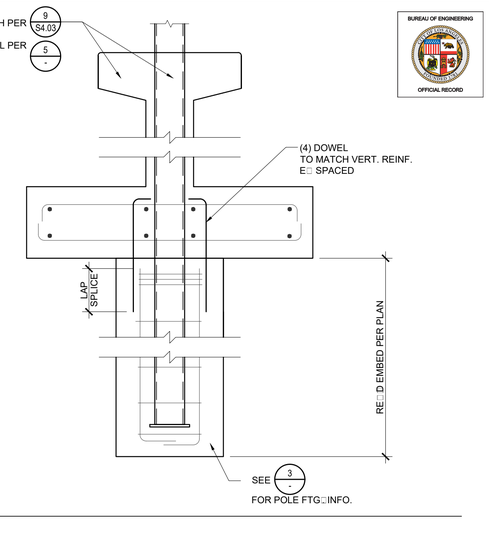

6 DETAIL
SCALE: N.T.S.

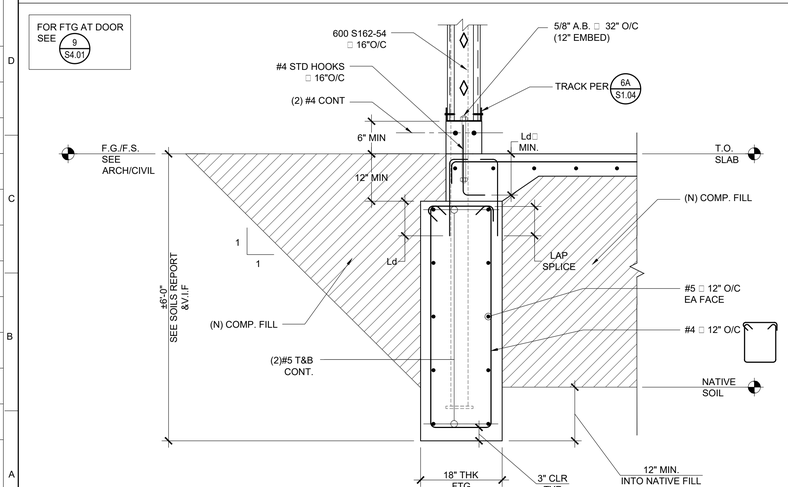

7 DETAIL
SCALE: N.T.S.

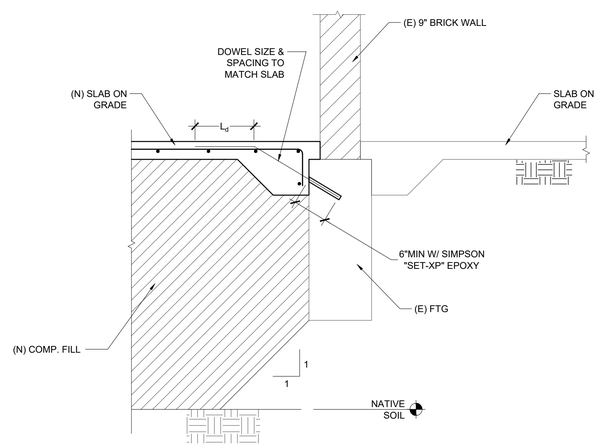

8 DETAIL
SCALE: N.T.S.

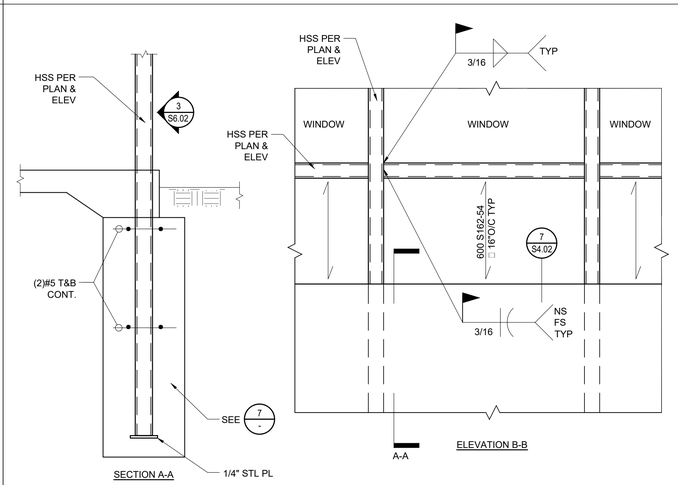

9 BATH HOUSE
SCALE: N.T.S.

BUREAU OF ENGINEERING
OFFICIAL RECORD

REGISTERED PROFESSIONAL ENGINEER
DOUGLAS KEOKI KAPP
No. S4029
Exp. 9/30/20
STRUCTURAL
STATE OF CALIFORNIA

BUREAU OF ENGINEERING
DEPARTMENT OF PUBLIC WORKS
CITY OF LOS ANGELES

ENGINEERING
CITY OF LOS ANGELES

NO.	REVISION DESCRIPTION	DATE	BY

BUILDING NO. -

INDEX NO. RP-300118

GARY LEE MOORE, PE, ENV SP
CITY ENGINEER
ARCHITECTURAL DIVISION

	DATE
ARCHITECT/ENGINEER: JHON SPARANO LIC. NO.: LICENSE	11/01/18
DESIGNED BY: SPARANO □ MOONEY ARCHITECTURE	11/01/18
DRAWN BY: ALEX. □	11/01/18
CHECKED BY: YOUNG, NAM	11/01/18
APPROVED BY:	11/01/18

BID SET
PROJECT ISSUE DATE: 06/22/21

VERTICAL CONTROL:
HORIZONTAL CONTROL:

SHEET TITLE: FOUNDATION DETAILS

PROJECT: GRANADA HILLS POOL AND BATH HOUSEREPLACEMENT PROJECT

ADDRESS: 16730 CHATSWORTH STREETGRANADA HILLS, CA 91344

WORK ORDER NO. #E170517

PLAN FILE NO.

DRAWING NO. S4.02

SHEET OF SHEETS

REVISION DATES (DESIGN STAGE ONLY)

TTLB TEMPLATE REVISION DATE: 02/2013
SHEET ISSUE DATE: 04/08/14
FILE PATH: C:\Users\Y□in.Do□□ents\S.GRANADA HILL-V17_Y□in.rvt

THE CITY OF LOS ANGELES OR ITS OFFICERS OR AGENTS SHALL NOT BE RESPONSIBLE FOR THE ACCURACY OR COMPLETENESS OF ELECTRONIC COPIES OF THIS PLAN SHEET.

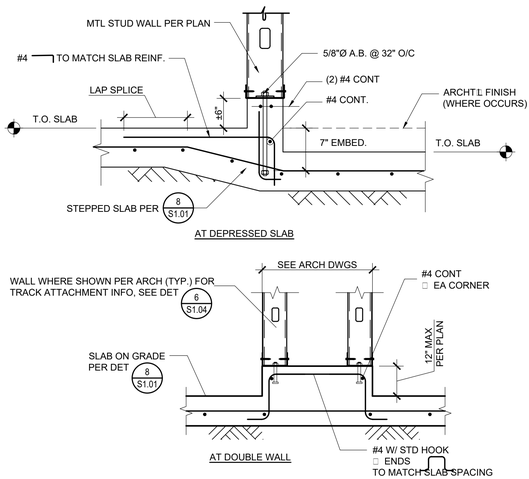

1 DETAIL
SCALE: N.T.S.

2 DETAIL
SCALE: N.T.S.

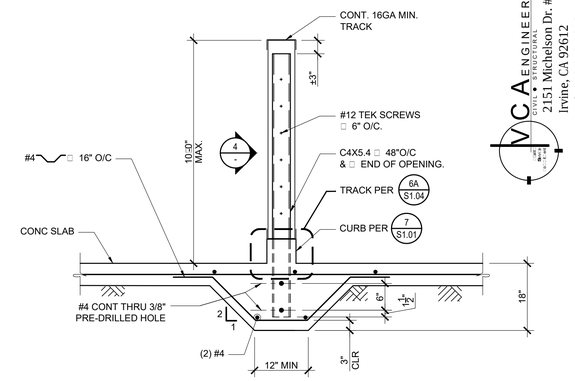

3 TYP PARTITION WALL SUPPORT & FTG
SCALE: N.T.S.

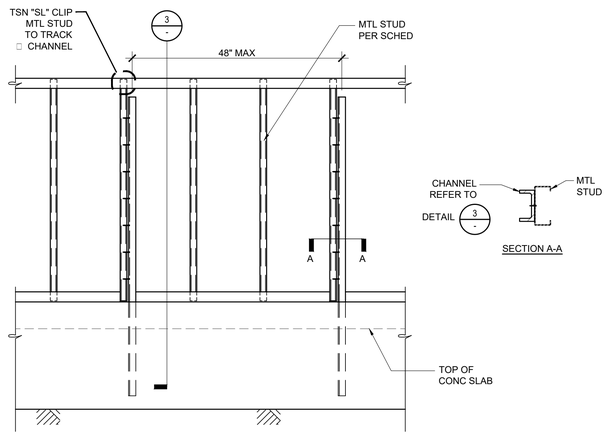

4 DETAIL
SCALE: N.T.S.

5 DETAIL
SCALE: N.T.S.

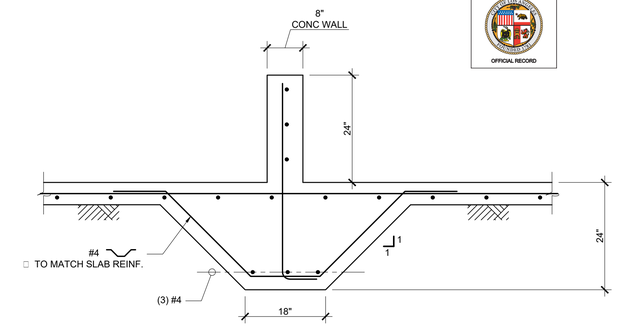

6 DETAIL
SCALE: N.T.S.

7 DETAIL
SCALE: N.T.S.

8 DETAIL
SCALE: N.T.S.

This has been reviewed by the Bureau of Engineering, Geotechnical Engineering Division and found to be in conformance with our recommendations in the reports dated August 22, 2017, October, 25 2018 and February 18, 2020

RCE/GE DATE

FOR ADDITIONAL INFO SEE ARCHT'L DWGS

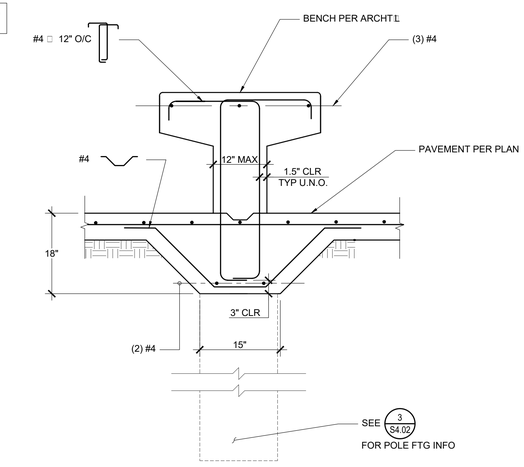

9 CONCRETE BENCH DETAIL (INTERIOR & EXTERIOR)
SCALE: N.T.S.

THE CITY OF LOS ANGELES OR ITS OFFICERS OR AGENTS SHALL NOT BE RESPONSIBLE FOR THE ACCURACY OR COMPLETENESS OF ELECTRONIC COPIES OF THIS PLAN SHEET.

TTLB TEMPLATE REVISION DATE: 02/2013
SHEET ISSUE DATE: 04/08/14
FILE PATH: C:\Users\Y□in\Do□□ents\S-GRANADA HILL-V17_Y□in.rvt

REVISION DATES (DESIGN STAGE ONLY)

MCA ENGINEERS INC
CIVIL • STRUCTURAL • MARINE • SURVEYING
2151 Michelson Dr. #240
Irvine, CA 92612
Tel. 949.679.0870
Fax. 949.679.9370
Project No. D312

BUREAU OF ENGINEERING
OFFICIAL RECORD

BUREAU OF ENGINEERING
CITY OF LOS ANGELES

NO.	REVISION DESCRIPTION	DATE	BY

INDEX NO. RP-300118
BUILDING NO. -

REGISTERED PROFESSIONAL ENGINEER
YOUNG-KEUN NAM
No. S4029
Exp. 9/30/20
STRUCTURAL
STATE OF CALIFORNIA

DEPARTMENT OF PUBLIC WORKS
GARY LEE MOORE, PE, ENV SP
CITY ENGINEER

		DATE:
ARCHITECTURAL DIVISION		
ARCHITECT/ENGINEER:	JHON SPARANO LIC. NO.: LICENSE	11/01/18
DESIGNED BY:	SPARANO □ MOONEY ARCHITECTURE	11/01/18
DRAWN BY:	ALEX, □	11/01/18
CHECKED BY:	YOUNG, NAM	11/01/18
APPROVED BY:		11/01/18

CITY OF LOS ANGELES

VERTICAL CONTROL:
HORIZONTAL CONTROL:
SHEET TITLE: FOUNDATION DETAILS
PROJECT: GRANADA HILLS POOL AND BATH HOUSEREPLACEMENT PROJECT
ADDRESS: 16730 CHATSWORTH STREETGRANADA HILLS, CA 91344

BID SET
PROJECT ISSUE DATE: 06/22/21

WORK ORDER NO. #E170517
PLAN FILE NO.
DRAWING NO. S4.03
SHEET OF SHEETS

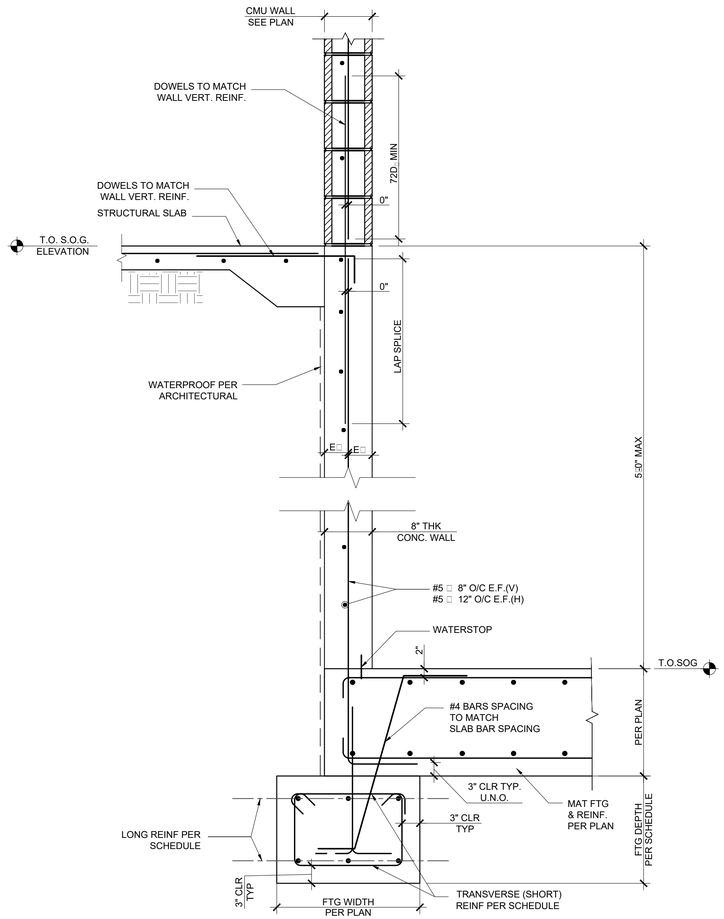

4 PIT AT STRUCTURAL SLAB
SCALE: N.T.S.

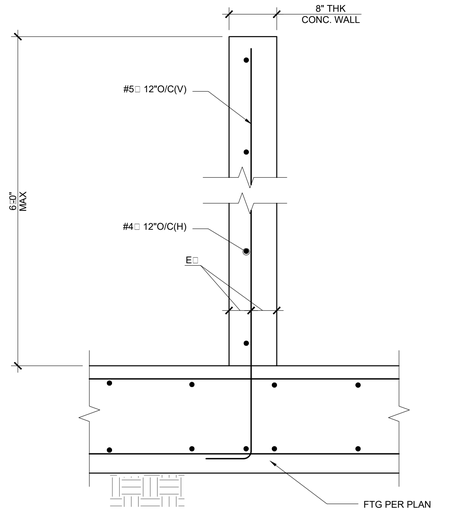

2 DETAIL
SCALE: N.T.S.

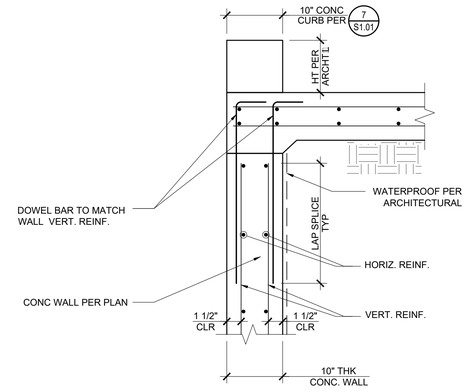

5 DETAIL
SCALE: N.T.S.

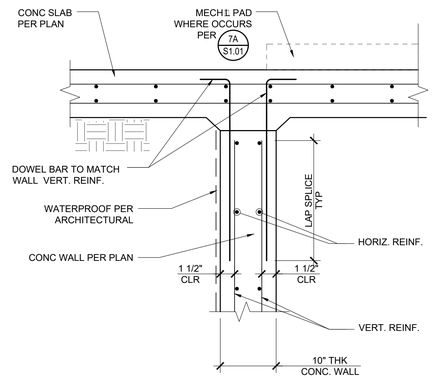

3 DETAIL
SCALE: N.T.S.

BALANCE OF INFO
SEE DET
6
S4.01

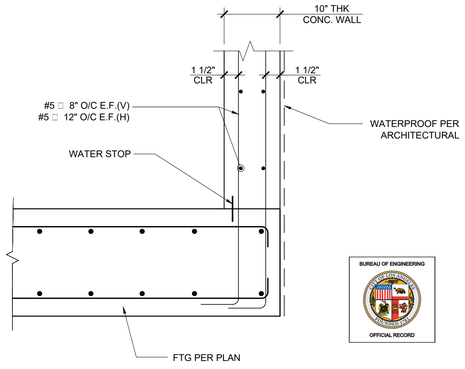

6 DETAIL
SCALE: N.T.S.

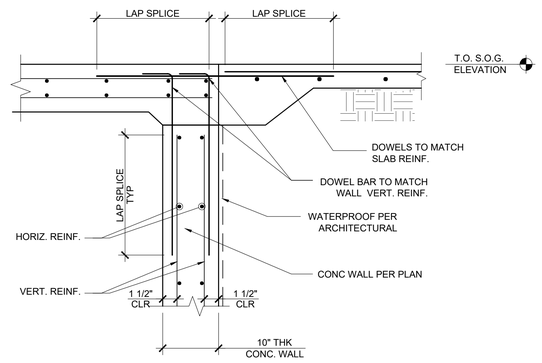

7 DETAIL
SCALE: N.T.S.

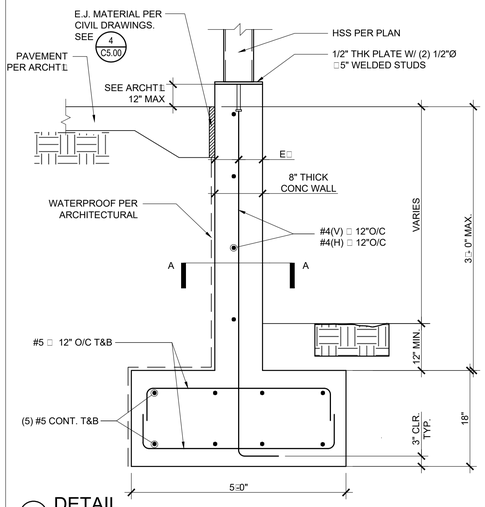

8 DETAIL
SCALE: N.T.S.

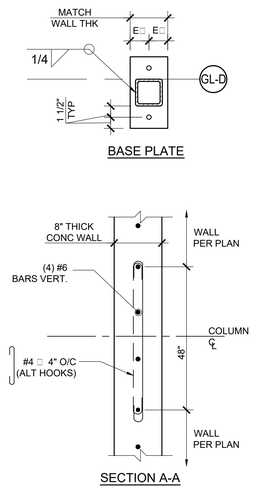

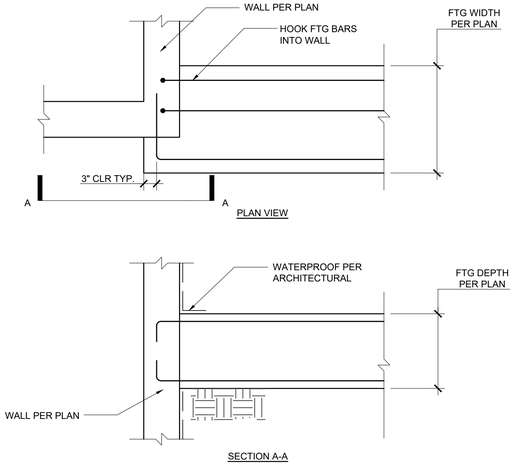

9 DETAIL
SCALE: N.T.S.

This has been reviewed by the Bureau of Engineering, Geotechnical Engineering Division and found to be in conformance with our recommendations in the reports dated August 22, 2017, October, 25 2018 and February 18, 2020

RCE/GE DATE

VCA ENGINEERS, INC.
CIVIL • STRUCTURAL • MECHANICAL
2151 Michelson Dr. #240
Irvine, CA 92612
Tel. 949.679.0870
Fax. 949.679.9370
Project No. D312

BUREAU OF ENGINEERING
OFFICIAL RECORD

DEPARTMENT OF PUBLIC WORKS
BUREAU OF ENGINEERING
CITY OF LOS ANGELES

ENGINEERING
CITY OF LOS ANGELES

NO.	REVISION DESCRIPTION	DATE	BY

BUILDING NO. -
INDEX NO. RP-300118

REGISTERED PROFESSIONAL ENGINEER
DOUGLAS KEON WAI
No. S4029
F□ 9/30/20
STRUCTURAL
STATE OF CALIFORNIA

CITY ENGINEER
GARY LEE MOORE, PE, ENV SP
ARCHITECTURAL DIVISION

		DATE:
ARCHITECT/ENGINEER:	JHON SPARANO LIC. NO. LICENSE	11/01/18
DESIGNED BY:	SPARANO □MOONEY ARCHITECTURE	11/01/18
DRAWN BY:	ALEX. □	11/01/18
CHECKED BY:	YOUNG, NAM	11/01/18
APPROVED BY:		11/01/18

BID SET
PROJECT ISSUE DATE: 06/22/21

VERTICAL CONTROL:
HORIZONTAL CONTROL:

SHEET TITLE: FOUNDATION DETAILS

PROJECT: GRANADA HILLS POOL AND BATH HOUSEREPLACEMENT PROJECT

ADDRESS: 16730 CHATSWORTH STREET GRANADA HILLS, CA 91344

WORK ORDER NO. #E170517

PLAN FILE NO.

DRAWING NO. S4.04
SHEET OF SHEETS

THE CITY OF LOS ANGELES OR ITS OFFICERS OR AGENTS SHALL NOT BE RESPONSIBLE FOR THE ACCURACY OR COMPLETENESS OF ELECTRONIC COPIES OF THIS PLAN SHEET.

TTLB TEMPLATE REVISION DATE: 02/2013
SHEET ISSUE DATE: 04/08/14
FILE PATH: C:\Users\Y□in\Do□□ents\S-GRANADA HILL-V17_Y□in.rvt

REVISION DATES
(DESIGN STAGE ONLY)

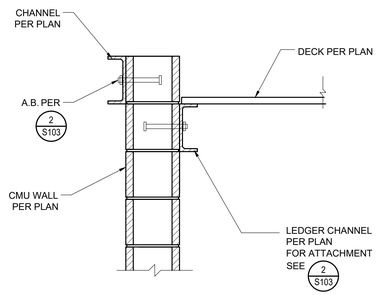

1 DETAIL
SCALE: N.T.S.

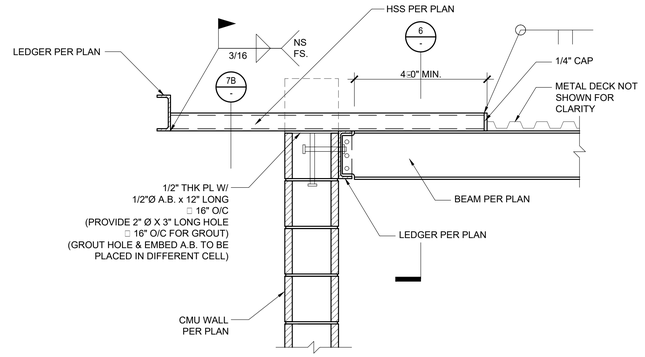

2 DETAIL
SCALE: N.T.S.

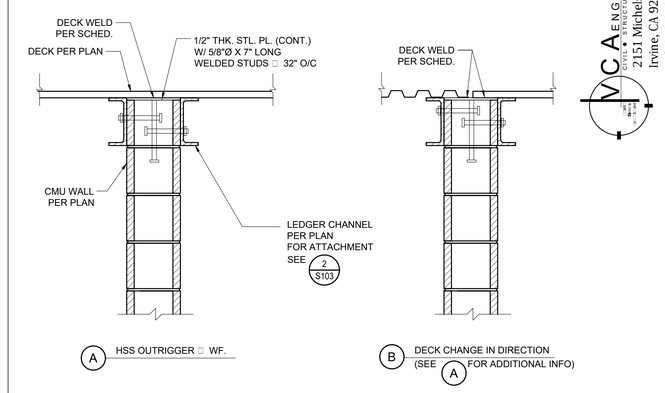

3 DETAIL
SCALE: N.T.S.

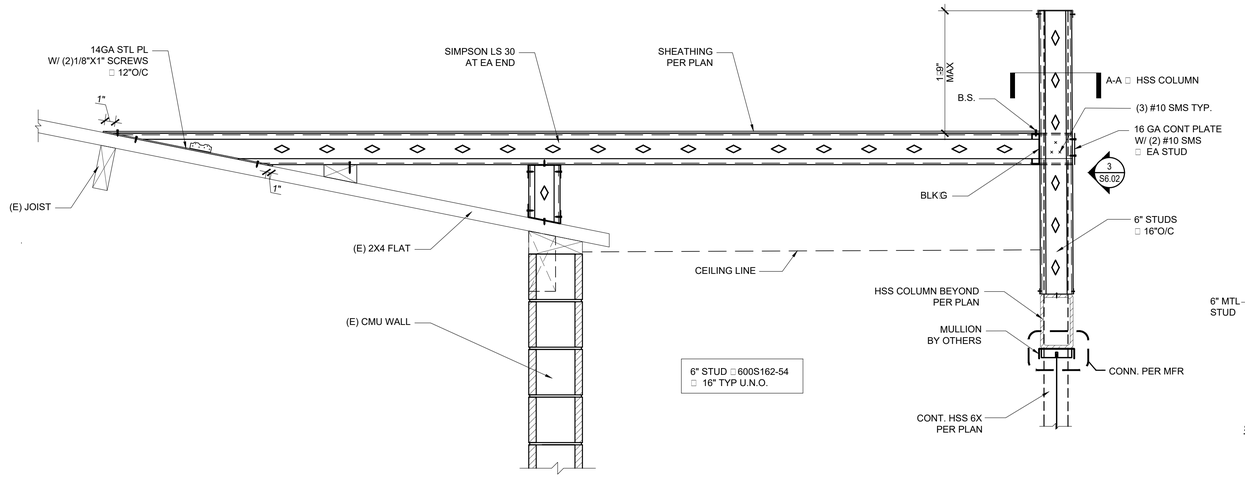

4 DETAIL
SCALE: N.T.S.

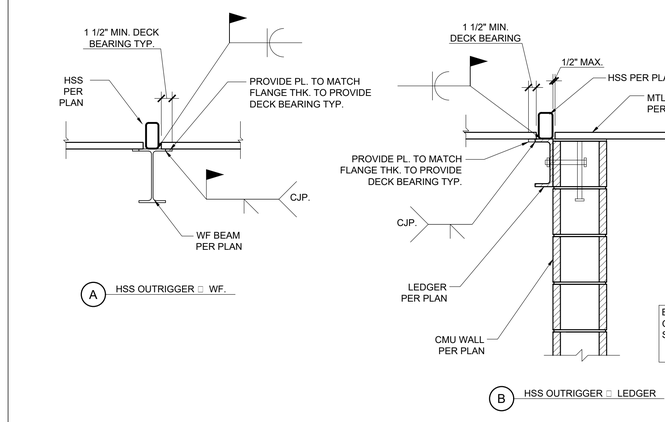

6 DETAIL
SCALE: N.T.S.

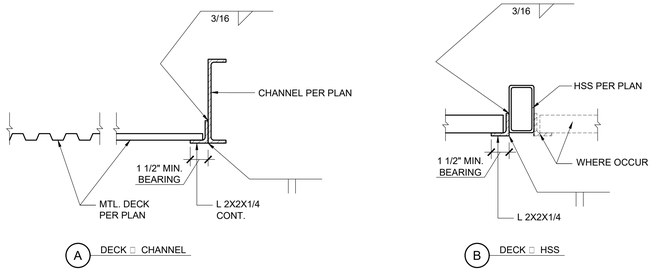

7 DETAIL
SCALE: N.T.S.

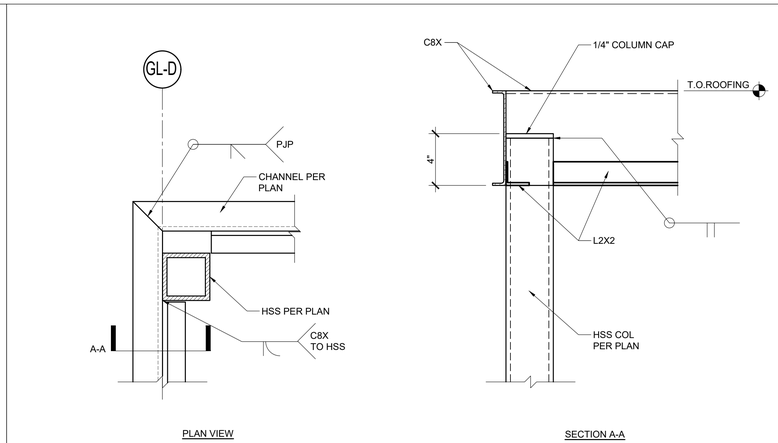

8 DETAIL
SCALE: N.T.S.

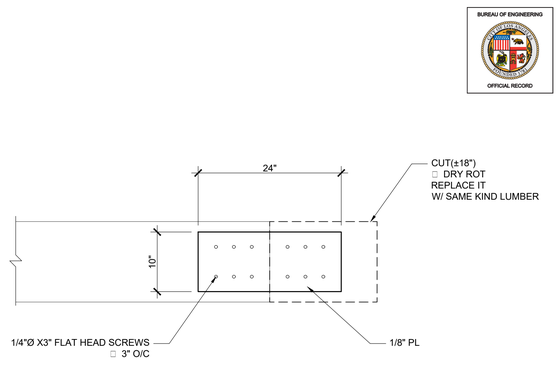

9 DETAIL
SCALE: N.T.S.

VCA ENGINEERS, INC.
CIVIL • STRUCTURAL
2151 Michelson Dr. #240
Irvine, CA 92612
Tel. 949.679.0870
Fax. 949.679.9370
Project No. D312

BUREAU OF ENGINEERING
DEPARTMENT OF PUBLIC WORKS
CITY OF LOS ANGELES

ENGINEERING
CITY OF LOS ANGELES

NO.	REVISION DESCRIPTION	DATE	BY

BUILDING NO. -

INDEX NO. RP-300118

REGISTERED PROFESSIONAL ENGINEER DOUGLAS KEUN YANG No. S4029 Exp. 9/30/20 STRUCTURAL STATE OF CALIFORNIA

CITY ENGINEER	DATE:
ARCHITECTURAL DIVISION	11/01/18
GARY LEE MOORE, PE, ENV SP	11/01/18
ARCHITECT/ENGINEER: JHON SPARANO LIC. NO.: LICENSE	11/01/18
DESIGNED BY: SPARANO □ MOONEY ARCHITECTURE	11/01/18
DRAWN BY: ALEX. □	11/01/18
CHECKED BY: YOUNG, NAM	11/01/18
APPROVED BY:	

BID SET
PROJECT ISSUE DATE: 06/22/21

VERTICAL CONTROL:
HORIZONTAL CONTROL:

SHEET TITLE: FRAMING DETAILS

PROJECT: GRANADA HILLS POOL AND BATH HOUSEREPLACEMENT PROJECT

ADDRESS: 16730 CHATSWORTH STREETGRANADA HILLS, CA 91344

BUREAU OF ENGINEERING OFFICIAL RECORD

WORK ORDER NO. #E170517

PLAN FILE NO.

DRAWING NO. S5.01
SHEET OF SHEETS

THE CITY OF LOS ANGELES OR ITS OFFICERS OR AGENTS SHALL NOT BE RESPONSIBLE FOR THE ACCURACY OR COMPLETENESS OF ELECTRONIC COPIES OF THIS PLAN SHEET.

TTLB TEMPLATE REVISION DATE: 02/2013
SHEET ISSUE DATE: 04/08/14
FILE PATH: C:\Users\Y□\inDo□□ents\S-GRANADA HILLS-V17_Y□.rvt

REVISION DATES (DESIGN STAGE ONLY)

THE CITY OF LOS ANGELES OR ITS OFFICERS OR AGENTS SHALL NOT BE RESPONSIBLE FOR THE ACCURACY OR COMPLETENESS OF ELECTRONIC COPIES OF THIS PLAN SHEET.

1 DETAIL
SCALE: N.T.S.

2 DETAIL
SCALE: N.T.S.

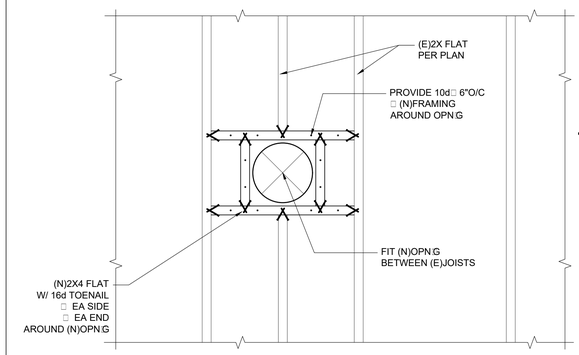

PLAN VIEW

3 DETAIL
SCALE: N.T.S.

4 DETAIL
SCALE: N.T.S.

5 DETAIL
SCALE: N.T.S.

6 DETAIL
SCALE: N.T.S.

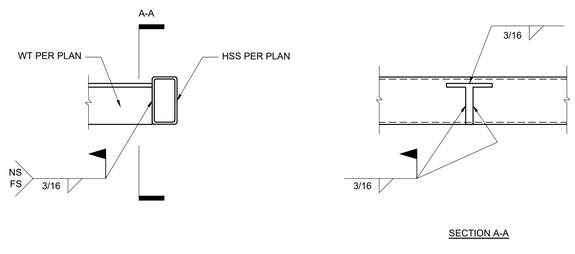

SECTION A-A

7 TRELLIS CONNECTION
SCALE: N.T.S.

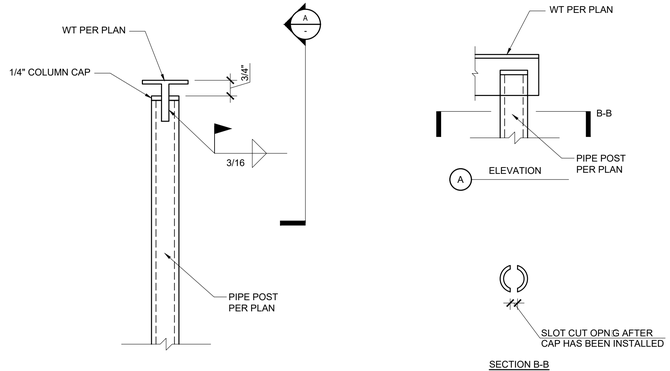

SECTION B-B

8 TRELLIS CONNECTION
SCALE: N.T.S.

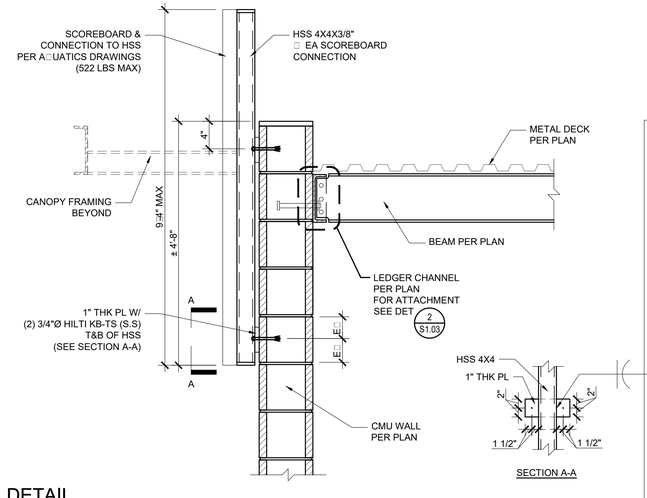

SECTION A-A

9 DETAIL
SCALE: N.T.S.

MCA ENGINEERS INC
CIVIL • STRUCTURAL
2151 Michelson Dr. #240
Irvine, CA 92612
Tel. 949.679.0870
Fax. 949.679.9370
Project No. D312

BUREAU OF ENGINEERING
OFFICIAL RECORD

BID SET
PROJECT ISSUE DATE: 06/22/21

CITY OF LOS ANGELES

DEPARTMENT OF PUBLIC WORKS

GARY LEE MOORE, PE, ENV SP
CITY ENGINEER

		DATE:
ARCHITECTURAL DIVISION		
ARCHITECT/ENGINEER:	JHON SPARANO LIC. NO.: LICENSE	11/01/18
DESIGNED BY:	SPARANO □ MOONEY ARCHITECTURE	11/01/18
DRAWN BY:	ALEX, □	11/01/18
CHECKED BY:	YOUNG, NAM	11/01/18
APPROVED BY:		11/01/18

VERTICAL CONTROL:
HORIZONTAL CONTROL:
SHEET TITLE: FRAMING DETAILS
PROJECT: GRANADA HILLS POOL AND BATH HOUSEREPLACEMENT PROJECT
ADDRESS: 16730 CHATSWORTH STREETGRANADA HILLS, CA 91344

WORK ORDER NO. #E170517
PLAN FILE NO.
DRAWING NO. S5.02
SHEET OF SHEETS

REVISION DATES (DESIGN STAGE ONLY)

TTLB TEMPLATE REVISION DATE: 02/2013
SHEET ISSUE DATE: 04/08/14
FILE PATH: C:\Users\Y□in\Do□□ents\S-GRANADA HILL-V17_Y□in.rvt

BUREAU OF ENGINEERING
CITY OF LOS ANGELES

NO.	REVISION DESCRIPTION	DATE	BY

INDEX NO. RP-300118
BUILDING NO. -

REGISTERED PROFESSIONAL ENGINEER
YOUNG-KEUN NAM
No. S4029
Exp. 9/30/20
STRUCTURAL
STATE OF CALIFORNIA

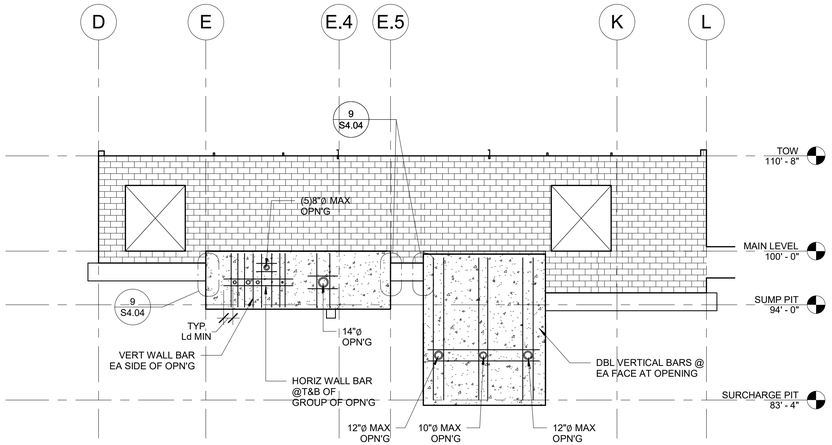

1 Elevation 1
SCALE: 1/8" = 1'-0"

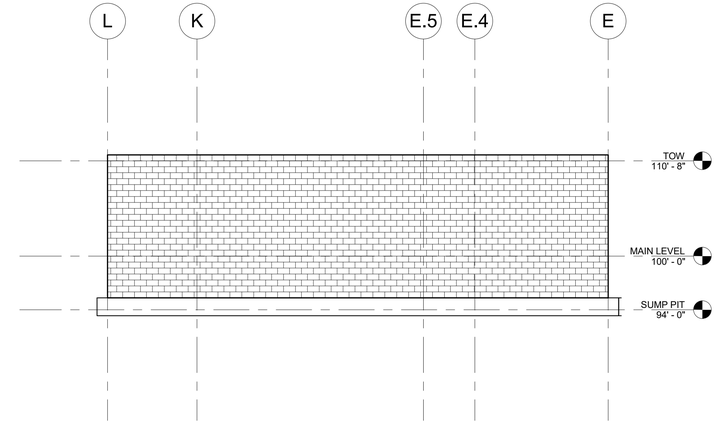

2 Elevation 2
SCALE: 1/8" = 1'-0"

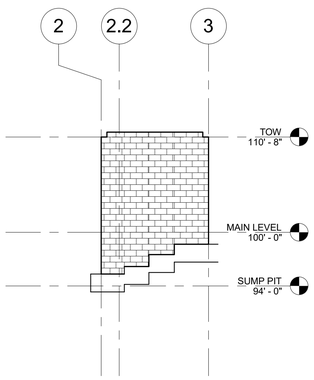

3 Elevation 3
SCALE: 1/8" = 1'-0"

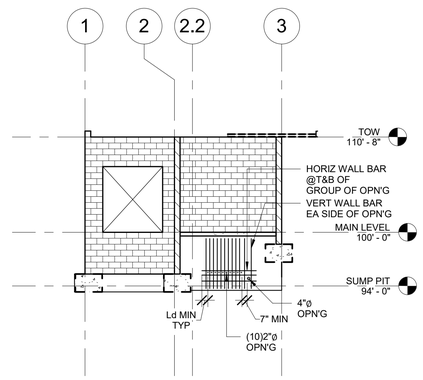

4 Elevation 4
SCALE: 1/8" = 1'-0"

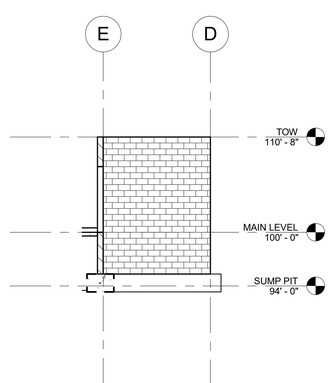

5 Elevation 5
SCALE: 1/8" = 1'-0"

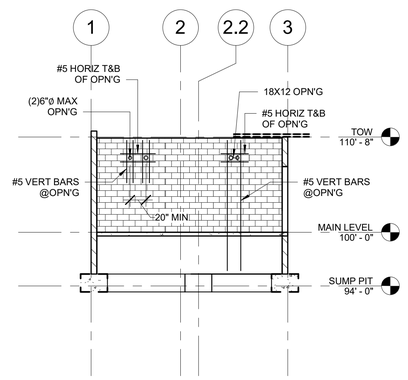

6 Elevation 6
SCALE: 1/8" = 1'-0"

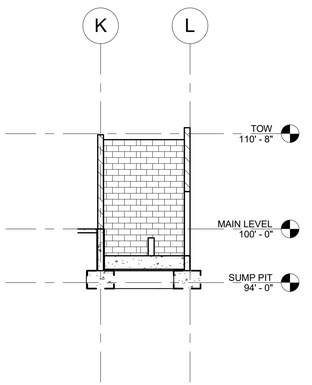

7 Elevation 7
SCALE: 1/8" = 1'-0"

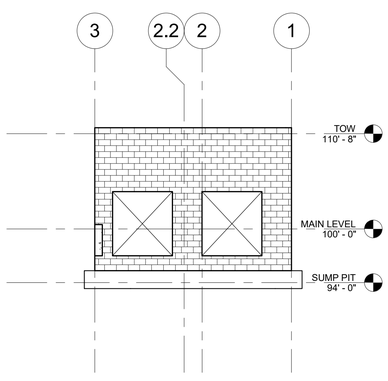

8 Elevation 8
SCALE: 1/8" = 1'-0"

CMU WALL ELEVATION NOTES:

1. FOR GENERAL NOTES, SEE S0.00 SERIES.
2. FOR TYPICAL DETAILS, SEE S1.00 SERIES.
3. 8" THK CMU WALL SOLID GROUT TYP. REINFORCEMENT. U.N.O.
   VERTICAL: #5 @ 8" O/C, @ CENTER
   HORIZONTAL: #5 @ 16" O/C, @ CENTER
4. FOR TYP. WALL REINFORCEMENT SEE DETAIL 1 / S1.06
5. FOR WALL INTERSECTION SEE DETAIL 3 / S1.06
6. COORDINATE EXACT LOCATION AND ROUGH OPENING OF DOORS WITH ARCHT'L DRAWINGS.

This has been reviewed by the Bureau of Engineering, Geotechnical Engineering Division and found to be in conformance with our recommendations in the reports dated August 22, 2017, October, 25 2018 and February 18, 2020

RCE/GE DATE

BUREAU OF ENGINEERING
OFFICIAL RECORD

VCA ENGINEERS, INC.
CIVIL • STRUCTURAL
2151 Michelson Dr. #240
Irvine, CA 92612
Tel. 949.679.0870
Fax. 949.679.9370
Project No. D312

DEPARTMENT OF PUBLIC WORKS
BUREAU OF ENGINEERING
ENGINEERING
CITY OF LOS ANGELES

NO.	REVISION DESCRIPTION	DATE	BY

BUILDING NO. -
INDEX NO. RP-300118

REGISTERED PROFESSIONAL ENGINEER KEUN S. YOUNG No. S4029 Exp. 9/30/20 STRUCTURAL STATE OF CALIFORNIA

CITY OF LOS ANGELES
DEPARTMENT OF PUBLIC WORKS
BUREAU OF ENGINEERING

GARY LEE MOORE, PE, ENV SP CITY ENGINEER
ARCHITECTURAL DIVISION

	DATE
ARCHITECT/ENGINEER: JHON SPARANO LIC. NO.: LICENSE	12/01/19
DESIGNED BY: SPARANO + MOONEY ARCHITECTURE	12/01/19
DRAWN BY: ALEX. Q	12/01/19
CHECKED BY: YOUNG, NAM	12/01/19
APPROVED BY: Approver	12/01/19

VERTICAL CONTROL:
HORIZONTAL CONTROL:

SHEET TITLE: ELEVATIONS

PROJECT: GRANADA HILLS POOL AND BATH HOUSE REPLACEMENT PROJECT

ADDRESS: 16730 CHATSWORTH STREET GRANADA HILLS, CA 91344

BID SET
PROJECT ISSUE DATE: 06/22/21

WORK ORDER NO. #E170517
PLAN FILE NO.
DRAWING NO. S6.01
SHEET 0 OF SHEETS

PLOTTED:2/28/2020 6:21:35 PM

REVISION DATES (FOR OFFICE USE ONLY)

THE CITY OF LOS ANGELES OR ITS OFFICERS OR AGENTS SHALL NOT BE RESPONSIBLE FOR THE ACCURACY OR COMPLETENESS OF ELECTRONIC COPIES OF THIS PLAN SHEET.

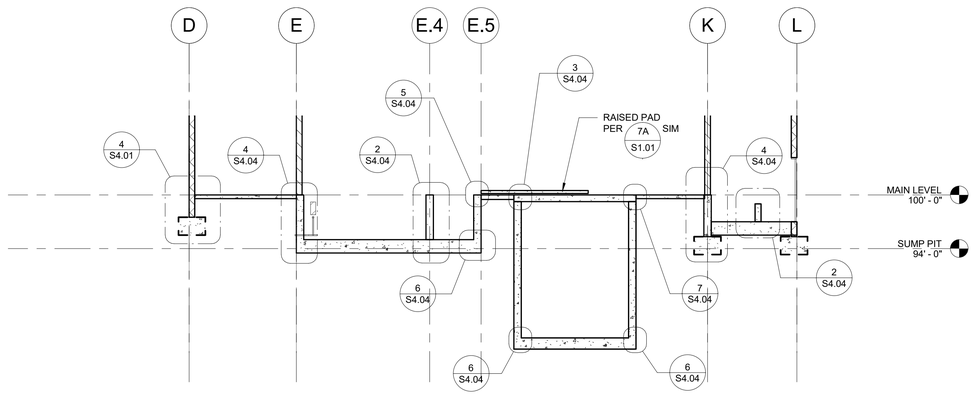

1 POOL EQUIPMENT ROOM SECTION
SCALE: 1/8" = 1'-0"

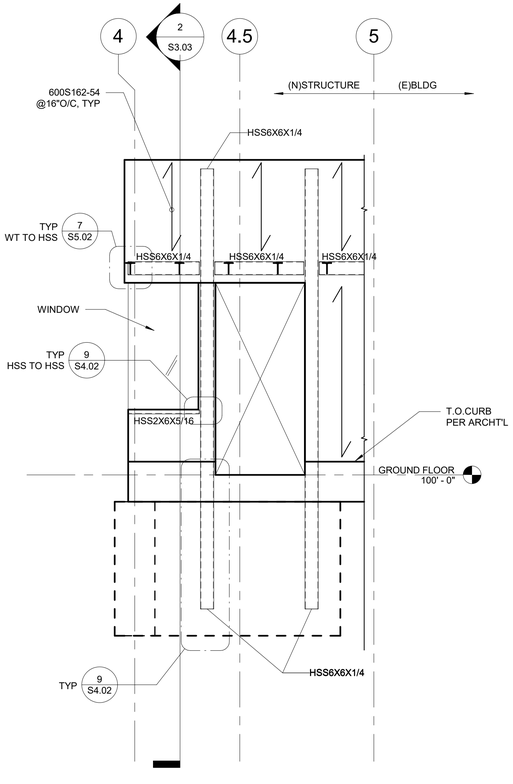

2 BATH HOUSE ADDITION ELEVATION 2
SCALE: 3/8" = 1'-0"

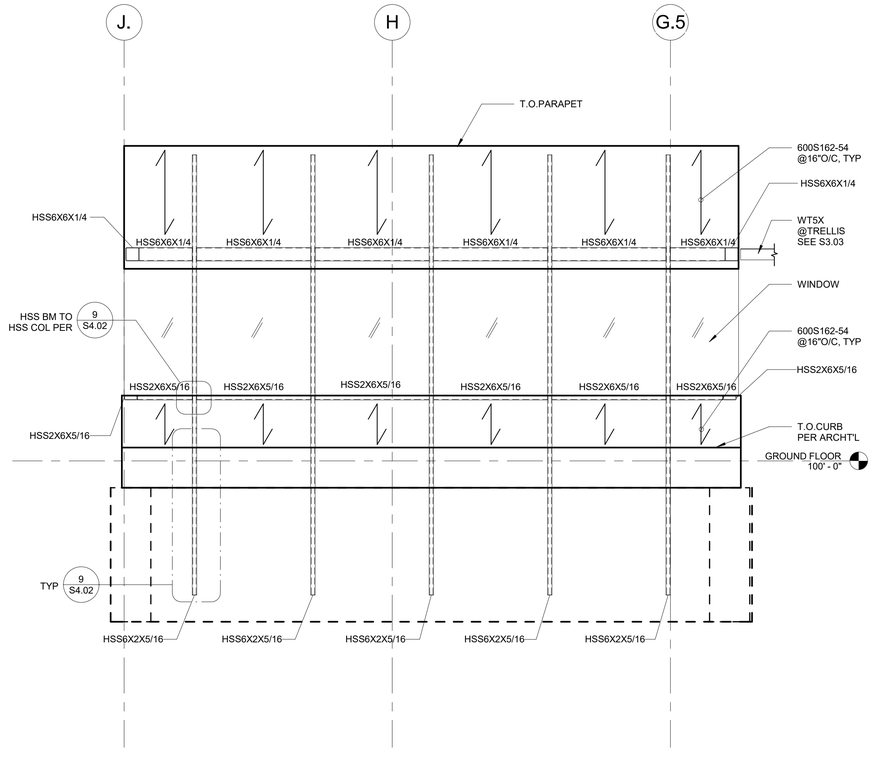

3 BATH HOUSE ADDITION ELEVATION 3
SCALE: 3/8" = 1'-0"

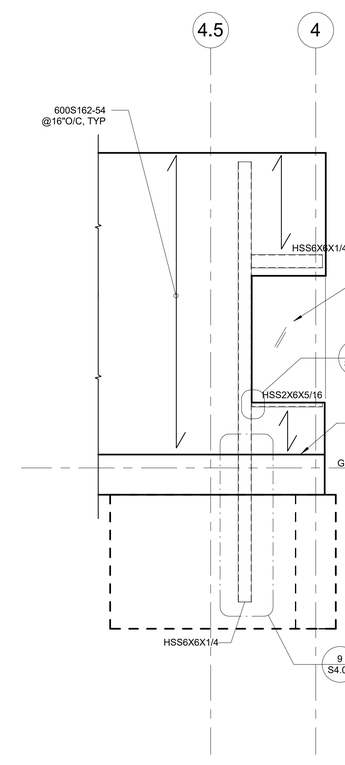

4 BATH HOUSE ADDITION ELEVATION 4
SCALE: 3/8" = 1'-0"

THE CITY OF LOS ANGELES OR ITS OFFICERS OR AGENTS SHALL NOT BE RESPONSIBLE FOR THE ACCURACY OR COMPLETENESS OF ELECTRONIC COPIES OF THIS PLAN SHEET.

REVISION DATES (DESIGN STAGE ONLY)

VCA ENGINEERS, INC.
CIVIL • STRUCTURAL
2151 Michelson Dr. #240
Irvine, CA 92612
Tel. 949.679.0870
Fax. 949.679.9370
Project No. D312

This has been reviewed by the Bureau of Engineering, Geotechnical Engineering Division and found to be in conformance with our recommendations in the reports dated August 22, 2017, October, 25 2018 and February 18, 2020

RCE/GE DATE

BUREAU OF ENGINEERING OFFICIAL RECORD

BUREAU OF ENGINEERING

NO.	REVISION DESCRIPTION	DATE	BY

INDEX NO. RP-300118

BUILDING NO. -

REGISTERED PROFESSIONAL ENGINEER YOUNG KEUN NAM No. S4029 Exp. 9/30/20 STRUCTURAL STATE OF CALIFORNIA

DEPARTMENT OF PUBLIC WORKS

GARY LEE MOORE, PE, ENV SP
ARCHITECTURAL DIVISION

	CITY ENGINEER	DATE:
ARCHITECT/ENGINEER: JHON SPARANO	LIC. NO.: LICENSE	12/01/19
DESIGNED BY: SPARANO + MOONEY ARCHITECTURE		12/01/19
DRAWN BY: ALEX, Q		12/01/19
CHECKED BY: YOUNG, NAM		12/01/19
APPROVED BY: Approver		12/01/19

CITY OF LOS ANGELES

VERTICAL CONTROL:
HORIZONTAL CONTROL:

SHEET TITLE: SECTIONS & ELEVATIONS

PROJECT: GRANADA HILLS POOL AND BATH HOUSE REPLACEMENT PROJECT

ADDRESS: 16730 CHATSWORTH STREET GRANADA HILLS, CA 91344

BID SET
PROJECT ISSUE DATE: 06/22/21

WORK ORDER NO. #E170517

PLAN FILE NO.

DRAWING NO. S6.02

SHEET OF SHEETS

PLOTTED:2/28/2020 6:21:36 PM

CONTROL LEGEND

1. ALL ITEMS INDICATED IN THIS LEGEND ARE NOT NECESSARILY USED ON THE DRAWINGS.
2. ALL CONDUIT, LINE VOLTAGE WIRING & DEVICES TO BE PROVIDED UNDER DIVISION 16

SYMBOL & ABBREVIATION	DESCRIPTION
(E)	ITEM TO BE FURNISHED AND INSTALLED UNDER ELECTRICAL DIVISION.
MS	MAGNETIC STARTER
NO	NORMALLY OPEN ELECTRICAL CONTACT
NC	NORMALLY CLOSED ELECTRICAL CONTACT
CR	ELECTRICAL COIL RELAY
OVL	OVERLOAD PROTECTION
PL	PILOT LIGHT
	ON – OFF SWITCH
H O A	HAND – OFF – AUTOMATIC SWITCH
DISC. S	DISCONNECT SWITCH
	ELECTRIC SWITCHING DEVICE
FS	FLOW SWITCH
TS	TEMPERATURE SWITCH
	FLOAT SWITCH
TD	TIME DELAY SWITCH
	SENSOR(TEMPERATURE, HUMIDITY ETC.)
P	PRESSURE SENSOR
SD.	SMOKE DETECTOR (SWITCH ACTIVATED BY)
OVL	SINGLE PHASE MOTOR W/BUILT-IN OVERLOAD PROTECTION
EM	ON EMERGENCY POWER
MCC MCC	MOTOR CONTROL CENTER
CP CP	CONTROL PANEL
NC.C.NO.	NORMALLY CLOSED. COMMON. NORMALLY OPEN
FMS	FACILITY MANAGEMENT SYSTEM
PC	PROGRAMMABLE CONTROLLER
AO, AI	ANALOG OUTPUT, ANALOG INPUT
DO, DI	DIGITAL OUTPUT, DIGITAL INPUT
	LINE VOLTAGE
	LOW VOLTAGE
	SLASHES INDICATE NO. OF WIRES
A	ACTUATOR FOR VALVE OR DAMPER
A	CONTROL AIR
CB	CIRCUIT BREAKER
U.P.S	UNINTERRUPTED POWER SUPPLY
U.O.N	UNLESS OTHERWISE NOTED

GENERAL NOTES

1. SEE ARCHITECTURAL REFLECTED CEILING PLANS FOR EXACT LOCATION OF DIFFUSERS, REGISTERS & ACCESS PANELS & OTHER CEILING MOUNTED DEVICES.
2. ARROWS AT CEILING DIFFUSERS INDICATE THE AIR THROW PATTERN.
3. INSTALLATION OF DUCTWORK AND PIPING SHALL BE COORDINATED WITH OTHER TRADES.
4. CONTRACTOR SHALL VISIT JOB SITE AND VERIFY CONDITIONS, LOCATIONS AND DIMENSIONS BEFORE STARTING ANY WORK.
5. DUCTS TO COMPLY WITH THE CURRENT C.M.C GUIDELINES.
6. A/C INSTALLER TO PROVIDE SHOP DRAWINGS FOR EXACT SIZES AND LOCATIONS OF EQUIPMENT BASES, FRAMED OPENINGS, SLEEVED OPENINGS AND EQUIPMENT SUPPORTS OR HANGERS.
7. A/C INSTALLER SHALL BALANCE AIR SYSTEM TO THE CFM CAPACITY AS INDICATED ON FLOOR PLAN.
8. LINED DUCT AND PLENUM SIZES SHOWN ARE NET INSIDE DIMENSIONS. INCREASE OUTSIDE DIMENSIONS TO COMPENSATE FOR LINER.
9. CONCEALED BUILDING SPACES USED AS RETURN AIR PLENUMS SHALL BE IN COMPLIANCE WITH CURRENT C.M.C REQUIREMENTS.
10. APPLIANCES DESIGNED TO BE IN FIXED POSITION SHALL BE SECURELY FASTENED IN PLACE PER SMACNA GUIDE LINES AND GOVERNING CODES.
11. POWER ON SITE SHALL BE VERIFIED BEFORE ORDERING EQUIPMENT.
12. PROVIDE IDENTIFICATION LABELS FOR ALL HVAC EQUIPMENT PER CODE & SPECIFICATIONS.

MECHANICAL LEGEND

ALL ITEMS INDICATED IN THIS LEGEND ARE NOT NECESSARILY USED ON THE DRAWINGS.

SYMBOL & ABBREVIATION	DESCRIPTION
	MATCH LINE
	EQUIPMENT DESIGNATION
	DETAIL REFERENCE
	NOTE REFERENCE
P.O.C	POINT OF CONNECTION
P.O.R	POINT OF REMOVAL
OA. SA. RA. EXH.	OUTSIDE AIR. SUPPLY. RETURN. EXHAUST
	SUPPLY AIR DUCT
	RA. OR OA. DUCT
	EXH. DUCT
	LINED DUCT
	TURNING VANES
	TRANSITION
	FLEXIBLE DUCT
	FLEXIBLE DUCT CONNECTION
BD	BACKDRAFT DAMPER
MVD	MANUAL VOLUME DAMPER
CD	CONTROL DAMPER
FD	FIRE DAMPER
CSFD	AUTOMATIC FIRE DAMPER (COMBINATION SMOKE & FIRE DAMPER)
SD	SMOKE DETECTOR
2.5 ф	LOUVER (EX; 2.5 ф)
	UNDERCUT DOOR 3/4" ABOVE FINISHED FLOOR
AD.AP.	ACCESS DOOR. ACCESS PANEL.
12x12 CD. CR.CG.	12x12 CEILING DIFFUSER. REGISTER. GRILLE. . ARROWS INDICATE THROW PATTERN.
12x12 TR. TG.BR.BG.	12x12 TOP REGISTER. GRILLE. BOTTOM REGISTER. GRILLE.
10'-0"x0'-6" LD.LG.	10 FT. LENGTH x 6 IN. WIDTH LINEAR DIFFUSER, LINEAR GRILLE.
LVR.	LOUVER
CONT.	CONTINUED, CONTINUATION
TYP.	TYPICAL
BEL.	BELOW
ABV.	ABOVE
W/	WITH
CFM	CUBIC FEET PER MINUTE
AFF	ABOVE FINISHED FLOOR
FS	FLOOR SINK
DN.	DOWN
EA.	EACH
E.S.P	EXTERNAL STATIC PRESSURE
HP	HORSE POWER
BHP	BRAKE HORSE POWER
V-ø	VOLT-PHASE
RPM	REVOLUTIONS PER MINUTE
FPM	FEET PER MINUTE
%EFF	EFFICIENCY (%)
T H S T.H.S.	ZONE TEMPERATURE SENSOR, HUMIDITY SENSOR, SWITCH
	EXISTING HVAC DUCTWORK/EQUIPTMENT TO BE REMOVED

THE SEISMIC ANCHORAGE OF MECHANICAL AND ELECTRICAL EQUIPMENT SHALL CONFORM TO C.C.R. TITLE 24, 2001 CBC SECTION 1632A AND TABLE 16A–O. ANCHORAGE DETAILS FOR ROOF/FLOOR MOUNTED EQUIPMENT SHALL BE SHOWN ON PLANS. WHERE ANCHORAGE DETAILS ARE NOT SHOWN ON THE DRAWINGS, THE FIELD INSTALLATION SHALL BE SUBJECT TO THE APPROVAL OF THE ENGINEER AND THE AUTHORITIES HAVING JURISDICTION.

HVAC SHEET INDEX

NO.	SHEET NO.	SHEET DESCRIPTION
1	M0.01	LEGENDS, NOTES & SHEET INDEX
2	M0.11	SCHEDULES
3	M0.20	TITLE 24
4	M0.30	TITLE 24
5	M0.40	TITLE 24
6	M2.10	HVAC FLOOR PLANS
7	M2.11	HVAC ROOF PLANS
8	M4.10	DETAILS
9	M4.11	DETAILS
10	M4.12	DETAILS
11	M5.10	CONTROLS
12	M5.11	CONTROLS
13	M5.12	CONTROLS

BUREAU OF ENGINEERING
OFFICIAL RECORD

THE CITY OF LOS ANGELES OR ITS OFFICERS OR AGENTS SHALL NOT BE RESPONSIBLE FOR THE ACCURACY OR COMPLETENESS OF ELECTRONIC COPIES OF THIS PLAN SHEET.

FILE PATH: V:\17019.00 Granada Hills Pool Renovation\Hvac\M0.01.dwg

SHEET ISSUE DATE: 03 JULY 2018

REVISION DATES (DESIGN STAGE ONLY)

DEPARTMENT OF PUBLIC WORKS
BUREAU OF ENGINEERING
CITY OF LOS ANGELES

ENGINEERING
CITY OF LOS ANGELES

NO.	REVISION DESCRIPTION	DATE	BY

BUILDING NO. -

INDEX NO. RP-300118

PROFESSIONAL ENGINEER — GARY LEE MOORE — No. 26903 — (Renewal: 9/30/20) — MECHANICAL — STATE OF CALIFORNIA

CITY ENGINEER
DATE:

GARY LEE MOORE, PE, ENV SP
ARCHITECTURAL DIVISION
LIC. NO.:

ARCHITECT: JOHN SPARANO
DESIGNED BY: MAROKO & SHWE, INC.
DRAWN BY: N.W. S.N
CHECKED BY: J.S
APPROVED BY:

VERTICAL CONTROL:
HORIZONTAL CONTROL:

SHEET TITLE: LEGENDS, NOTES AND SHEET INDEX

PROJECT: GRANADA HILLS POOL AND BATHHOUSE REPLACEMENT PROJECT
ADDRESS: 16730 CHATSWORTH STREET GRANADA HILLS, CA 91344

BID SET
PROJECT ISSUE DATE:06/22/21.

WORK ORDER NO. #E170517
PLAN FILE NO.
DRAWING NO. M0.01
SHEET - OF - SHEETS

PLOTTED:11/30/2018 3:07:39 PM

©2018 Board of Public Works, City of Los Angeles

EXHAUST FANS

	EF-1	EF-2	EF-3	EF-4	EF-5	EF-6	EF-7	EF-8	EF-9	EF-10	EF-11	EF-12	EF-13
SPEC. REF. & SECTION	23-8000	23-8000	23-8000	23-8000	23-8000	23-8000	23-8000	23-8000	23-8000	23-8000	23-8000	23-8000	23-8000
SERVICE	FAM/ UNISEX 109	FAM/ UNISEX 108	STAFF RR 104	JAN 112	JAN 113	MEN'S RR 120,	WOMEN'S RR 121,	LOBBY/ENTRY 100	CHLORINE STORAGE 151	ACID STORAGE 152	STORAGE 155	WOMEN'S SHOWER 119, WOMEN'S CHANGING 111	MEN'S SHOWER 118, MEN'S CHANGING 110
LOCATION	FAM/ UNISEX 109	FAM/ UNISEX 108	STAFF RR 104	BUILDING ROOF	BUILDING ROOF	BUILDING ROOF	BUILDING ROOF	BUILDING ROOF	BUILDING ROOF	BUILDING ROOF	BUILDING ROOF	BUILDING ROOF	BUILDING ROOF
TYPE	CEILING EXHAUST FAN	CEILING EXHAUST FAN	CEILING EXHAUST FAN	UPBLAST CENTRIFUGAL ROOF EXHAUSTER	UPBLAST CENTRIFUGAL ROOF EXHAUSTER	WIND POWERED ROOF EXHAUSTER	WIND POWERED ROOF EXHAUSTER	WIND POWERED ROOF EXHAUSTER	UPBLAST CENTRIFUGAL ROOF EXHAUSTER	UPBLAST CENTRIFUGAL ROOF EXHAUSTER	UPBLAST CENTRIFUGAL ROOF EXHAUSTER	WIND POWERED ROOF EXHAUSTER	WIND POWERED ROOF EXHAUSTER
DESIGN BASE MANUFACTURER & MODEL	GREENHECK SP-A110	GREENHECK SP-A110	GREENHECK SP-A110	GREENHECK CUE-065-VG	GREENHECK CUE-065-VG	EDMONDS EP600	EDMONDS EP600	EDMONDS EP400	CUE-060-VG	CUE-060-VG	CUE-060-VG	EDMONDS EP400	EDMONDS EP400
CFM	100	100	100	150	150	1400	1400	500	150	150	120	500	500
EXT. SP (IN. WG)	0.237	0.237	0.237	0.25	0.25	0.08	0.08	0.14	0.25	0.25	0.3	0.14	0.14
DRIVE	DIRECT	DIRECT	DIRECT	DIRECT	DIRECT	DIRECT	DIRECT	DIRECT	DIRECT	DIRECT	DIRECT	DIRECT	DIRECT
MOTOR — W	18	18	18	-	-	116	116	68	-	-	-	68	68
MOTOR — HP	-	-	-	1/10	1/10	-	-	-	1/10	1/10	1/10	-	-
MOTOR — VOLT	115	115	115	115	115	230	230	230	115	115	115	230	230
MOTOR — ø	1	1	1	1	1	1	1	1	1	1	1	1	1
MOTOR — Hz	60	60	60	60	60	60	60	60	60	60	60	60	60
MOTOR — RPM	N/A	N/A	N/A	1725	1725	N/A	N/A	N/A	1725	1725	1725	N/A	N/A
OPERATING WEIGHT (LBS)	17	17	17	41	41	50	50	35	41	41	40	35	35
VIBRATION ISOLATORS — TYPE	N/A	N/A	N/A	N/A	N/A	N/A	N/A	N/A	N/A	N/A	N/A	N/A	N/A
VIBRATION ISOLATORS — DEFLECTION (IN)	N/A	N/A	N/A	N/A	N/A	N/A	N/A	N/A	N/A	N/A	N/A	N/A	N/A
PLBG. REQUIRED	NO	NO	NO	NO	NO	NO	NO	NO	NO	NO	NO	NO	NO
REFERENCE ANCHORAGE DETAIL	#5/M4.10	#5/M4.10	#5/M4.10	#3/M4.11	#3/M4.11	#6/M4.10	#6/M4.10	#6/M4.10	#3/M4.11	#3/M4.11	#3/M4.11	#6/M4.10	#6/M4.10
REFERENCE CONTROL DETAIL	#2/M5.11	#2/M5.11	#2/M5.11	#1/M5.11	#1/M5.11	#3/M5.11	#3/M5.11	#3/M5.11	#5/M5.10	#5/M5.10	#1/M5.11	#3/M5.11	#3/M5.11
REMARKS	PROVIDE CEILING GRILLE & WALL FAN SWITCH.	PROVIDE CEILING GRILLE & WALL FAN SWITCH.	PROVIDE CEILING GRILLE & WALL FAN SWITCH.	PROVIDE PITCHED ROOF CURB, BACKDRAFT DAMPER, INSECT SCREEN & INTERLOCK WITH LIGHT SWITCH OR MANUAL SWITCH W/ LABEL.	PROVIDE PITCHED ROOF CURB, BACKDRAFT DAMPER, INSECT SCREEN & INTERLOCK WITH LIGHT SWITCH OR MANUAL SWITCH W/ LABEL.	PROVIDE ROOF CURB, ROUND TO RECTANGULAR ADAPTER & BACKDRAFT DAMPER.	PROVIDE ROOF CURB, ROUND TO RECTANGULAR ADAPTER & BACKDRAFT DAMPER.	PROVIDE ROOF CURB, ROUND TO RECTANGULAR ADAPTER & BACKDRAFT DAMPER.	ALL PARTS OF THIS FAN EXPOSED TO THE EXHAUST AIR STREAM TO BE COATED WITH 15 MILS 3M 324 HI-BAKE EPOXY. PROVIDE NON SPARKING WHEEL, EXPLOSION PROOF MOTOR, ROOF CURB, BACKDRAFT DAMPER, AND WEATHER PROOF COVER.	ALL PARTS OF THIS FAN EXPOSED TO THE EXHAUST AIR STREAM TO BE COATED WITH 15 MILS 3M 324 HI-BAKE EPOXY. PROVIDE NON SPARKING WHEEL, EXPLOSION PROOF MOTOR, ROOF CURB, BACKDRAFT DAMPER, AND WEATHER PROOF COVER.	PROVIDE PITCHED ROOF CURB, BACKDRAFT DAMPER, INSECT SCREEN & INTERLOCK WITH LIGHT SWITCH OR MANUAL SWITCH W/ LABEL.	PROVIDE ROOF CURB, ROUND TO RECTANGULAR ADAPTER & BACKDRAFT DAMPER.	PROVIDE ROOF CURB, ROUND TO RECTANGULAR ADAPTER & BACKDRAFT DAMPER.

VENTILATOR

	V-1	V-2
TAG		
SPEC SECTION	23-8000	23-8000
SERVICE	MEN'S VESTIBULE 102, MEN'S CHANGING 110, MEN'S SHOWER 118, MEN'S RR 120	WOMEN'S VESTIBULE 103, WOMEN'S CHANGING 111, WOMEN'S SHOWER 119, WOMEN'S RR 121
LOCATION	BUILDING ROOF	BUILDING ROOF
DESIGN BASE MANUFACTURER & MODEL	GREENHECK FGI-20x44	GREENHECK FGI-20x44
CFM	3300	3300
SP (IN W.G)	0.05	0.05
CURB SIZE (IN)	50	50
NECK SIZE (IN)	44	44
WEIGHT (LBS)	107	107
REFERENCE SECTION DETAIL	#5/M4.11	#5/M4.11
REMARKS	PROVIDE PITCHED ROOF CURB & INSECT SCREEN.	PROVIDE PITCHED ROOF CURB & INSECT SCREEN.

GAS INFRA-RED RADIANT HEATERS

TAG	SPEC. REFER.	LOCATION	TYPE	DESIGN BASE MANUFACTURER & MODEL	INPUT (MBH)	GAS CONNECTION	FUEL — TYPE	FUEL — RATE (CFH)	FUEL — PRESSURE (WC) MIN	FUEL — PRESSURE (WC) MAX	ELECTRICAL DATA — UNIT FLA	ELECTRICAL DATA — V - Ø	OPER. WEIGHT (LBS)	REFERENCE ANCHORAGE DETAIL	REFERENCE CONTROL DETAIL	REMARKS
RH-1	23-8000	MEN'S CHANGING 110, MEN'S SHOWER 118	LOW-INTENSITY UNITARY INFRARED HEATER	VANTAGE CTH2V-40	40	1/2"	NAT GAS	40	4.6"	14"	1	120 - 1	158	#1/M4.11	#4/M5.10	
RH-2	23-8000	MEN'S CHANGING 110, MEN'S SHOWER 118	LOW-INTENSITY UNITARY INFRARED HEATER	VANTAGE CTH2V-40	40	1/2"	NAT GAS	40	4.6"	14"	1	120 - 1	158	#1/M4.11	#4/M5.10	
RH-3	23-8000	MEN'S CHANGING 110, MEN'S SHOWER 118	LOW-INTENSITY UNITARY INFRARED HEATER	VANTAGE CTH2V-40	40	1/2"	NAT GAS	40	4.6"	14"	1	120 - 1	158	#1/M4.11	#4/M5.10	
RH-4	23-8000	WOMEN'S CHANGING 111, WOMEN'S SHOWER 119	LOW-INTENSITY UNITARY INFRARED HEATER	VANTAGE CTH2V-40	40	1/2"	NAT GAS	40	4.6"	14"	1	120 - 1	158	#1/M4.11	#4/M5.10	
RH-5	23-8000	WOMEN'S CHANGING 111, WOMEN'S SHOWER 119	LOW-INTENSITY UNITARY INFRARED HEATER	VANTAGE CTH2V-40	40	1/2"	NAT GAS	40	4.6"	14"	1	120 - 1	158	#1/M4.11	#4/M5.10	
RH-6	23-8000	WOMEN'S CHANGING 111, WOMEN'S SHOWER 119	LOW-INTENSITY UNITARY INFRARED HEATER	VANTAGE CTH2V-40	40	1/2"	NAT GAS	40	4.6"	14"	1	120 - 1	158	#1/M4.11	#4/M5.10	

SPLIT SYSTEM HEAT PUMP UNIT

			SHP-3/1
TAG			
SPEC. REFERENCE			23-8000
MANUFACTURER & UNIT TYPE			LG MULTI F INVERTER HEAT PUMP UNIT
MODEL NO.			LMU36CHV
NOMINAL TONS			3
LOCATION			BUILDING ROOF
SERVICE			SEE FLOOR PLAN
COOLING	CAPACITY	TOTAL (MBH)	34,000
		SENSIBLE (MBH)	25,500
	AMBIENT TEMP (°F)		95
	EDB (°F)		80
	EWB (°F)		67
HEATING	CAPACITY (MBH)		41,000
REFRIGERANT	TYPE		R410A
ELECTRICAL	MOP (A)		25
	MCA (A)		17.9
	V / ϕ / Hz		208/1/60
OPERATING WEIGHT (LBS)			137
VIBRATION ISOLATORS	TYPE		3/4" NEOPRENE PAD
	STATIC DEFLECTION		-
REDERNCE ANCHORAGE DETAIL			#1, 2, 3/M4.12
REFERNCE CONTROL DETAIL			#1, 2, 3/M5.10
REMARK			

SPLIT SYSTEM CONDENSING UNIT

			CU-1/A
TAG			
SPEC. REF. & SECTION			23-8000
SERVICE			SEE FLOOR PLAN
LOCATION			BUILDING ROOF
MANUFACTURER & MODEL			LG LSU120HSV5
COOLING	CAPACITY (MBH)	SENSIBLE	9,000
		TOTAL	12,000
	AMBIENT TEMP. (°F)		95
	EDB TEMP. (°F)		80
	EWB TEMP. (°F)		67
	SEER/EER		22.7/12.5
REFRIGERANT	TYPE		R410A
	WEIGHT (LBS)		2.21
ELECTRICAL	V		208-230
	ø		1
	Hz		60
	MOP (A)		15
	MCA (A)		10
INDOOR UNIT / FAN COIL UNIT			FC-1/A
OPER. WEIGHT (LBS)			74.1
VIBRATION ISOLATORS	TYPE		N/A
	DEFLECTION (IN)		N/A
PLBG. REQD.			NO
REDERNCE ANCHORAGE DETAIL			#1, 2, 3/M4.12
REFERNCE CONTROL DETAIL			#1, 2, 3/M5.12
REMARKS			PROVIDE LIQUID LINE SOLENOID VALVE, COIL GUARDS, FILTER DRYER AND LOW AMBIENT KIT.

FAN COIL UNITS

		FC-0.75/1	FC-1/1	FC-1.5/1	FC-1A
UNIT TAG ON PLAN		23-8000	23-8000	23-8000	23-8000
SERVICE		FIRST AID 106	LIFEGUARD 107	CHECK-IN 105	ELEC 123
MANUFACTURER & UNIT TYPE		LG MULTI F CEILING CASSETTE	LG MULTI F CEILING CASSETTE	LG FLEX MULTI CEILING CASSETTE	LG WALL MOUNTED FAN COIL UNIT
MODEL NO.		LCN097HV4	LCN127HV4	LMCN185HV	LSN120HSV5
COOLING	CFM	265	283	424	338
	TOTAL (BTUH)	9,000	12,000	18,000	12,000
	SENSIBLE (BTUH)	6,750	9,000	13,500	9,000
	REFRIGERANT	R410A	R410A	R410A	R410A
	EAT DB (°F)	80	80	78	79
	EAT WB (°F)	65	65	64	64
HEATING	HEATING TOTAL (BTUH)	10,400	13,800	20,800	LOCK THE HEATING
ELECTRICAL	FLA	0.25	0.25	0.25	0.4
	V / ϕ / Hz	208/1/60	208/1/60	208/1/60	POWERED THRU OUTDOOR UNIT (CU-1A)
OPERATING WEIGHT (LBS)		31	31	34	18.3
REFERENCE ANCHORAGE DETAIL		#7, 8/M4.10 &#1, 2/M4.11	#7, 8/M4.10 &#1, 2/M4.11	#7, 8/M4.10 &#1, 2/M4.11	#6/M4.11
REFERENCE CONTROL DETAIL		#1, 2, 3/M5.10	#1, 2, 3/M5.10	#1, 2, 3/M5.10	#1, 2, 3/M5.12
REMARKS		PROVIDE BUILT-IN CONDENSATE LIFT PUMP.	PROVIDE BUILT-IN CONDENSATE LIFT PUMP.	PROVIDE BUILT-IN CONDENSATE LIFT PUMP.	PROVIDE WALL MOUNTED BRACKET AND WIRED THERMOSTAT.

BUREAU OF ENGINEERING — OFFICIAL RECORD

BID SET
PROJECT ISSUE DATE: 06/22/21

CITY OF LOS ANGELES — DEPARTMENT OF PUBLIC WORKS — BUREAU OF ENGINEERING

ENGINEERING — CITY OF LOS ANGELES

NO.	REVISION DESCRIPTION	DATE	BY

BUILDING NO. -

INDEX NO. RP-300118

REGISTERED PROFESSIONAL ENGINEER — JAMES T. HARRE — No. 26903 — (Retired: 9/30/20) — MECHANICAL — STATE OF CALIFORNIA

CITY ENGINEER — DATE:

GARY LEE MOORE, PE, ENV SP
ARCHITECTURAL DIVISION

ARCHITECT: JOHN SPARANO — LIC. NO.:
DESIGNED BY: MAROKO & SHIVE, INC.
DRAWN BY: N.W, S.N
CHECKED BY: J.S
APPROVED BY:

VERTICAL CONTROL:
HORIZONTAL CONTROL:

SHEET TITLE: SCHEDULES

PROJECT: GRANADA HILLS POOL AND BATHHOUSE REPLACEMENT PROJECT

ADDRESS: 16730 CHATSWORTH STREET GRANADA HILLS, CA 91344

WORK ORDER NO. #E170517

PLAN FILE NO.

DRAWING NO. M0.11

SHEET - OF - SHEETS -

PLOTTED: 1/3/2019 5:52:51 PM

THE CITY OF LOS ANGELES OR ITS OFFICERS OR AGENTS SHALL NOT BE RESPONSIBLE FOR THE ACCURACY OR COMPLETENESS OF ELECTRONIC COPIES OF THIS PLAN SHEET.

FILE PATH: V:\17019.00 Granada Hills Pool Renovation\Hvac\M0.11.dwg

SHEET ISSUE DATE: 03 JULY 2018

REVISION DATES: (DESIGN STAGE ONLY)

© 2018 City of Los Angeles. All rights reserved.

Project Name:	Granada Hills Pool Renovation	NRCC-PRF-01-E	Page 7 of 21
Project Address:	16730 Chatsworth Street Granada Hills 91344	Calculation Date/Time:	18:16, Wed, Jun 27, 2018
Compliance Scope:	ExistingAlteration	Input File Name:	Granada Hills Pool Renovation_NR T24_6-26-2018.cibd16x

H. CERTIFICATE OF INSTALLATION, CERTIFICATE OF ACCEPTANCE & CERTIFICATE OF VERIFICATION SUMMARY (NRCI/NRCA/NRCV) –
Documentation Author to indicate which Certificates must be submitted for the features to be recognized for compliance
(Retain copies and verify forms are completed and signed to post in field for Field Inspector to verify).
See Tables G. and H. in MCH and LTI Details Sections for Acceptance Tests and forms by equipment.

Building Component	Compliance Forms *(required for submittal)*	Confirmed Pass	Confirmed Fail
Covered Process	☐ NRCI-PRC-01-E Refrigerated Warehouse	☐	☐
	☐ NRCA-PRC-01-F- Compressed Air Systems	☐	☐
	☐ NRCA-PRC-02-F- Kitchen Exhaust	☐	☐
	☐ NRCA-PRC-03-F- Garage Exhaust	☐	☐
	☐ NRCA-PRC-04-F- Refrigerated Warehouse- Evaporator Fan Motor Controls	☐	☐
	☐ NRCA-PRC-05-F- Refrigerated Warehouse- Evaporative Condenser Controls	☐	☐
	☐ NRCA-PRC-06-F- Refrigerated Warehouse- Air Cooled Condenser Controls	☐	☐
	☐ NRCA-PRC-07F- Refrigerated Warehouse- Variable Speed Compressor	☐	☐
	☐ NRCA-PRC-08-F- Electrical Resistance Underslab Heating System	☐	☐

I. ENVELOPE GENERAL INFORMATION (See NRCC-PRF-ENV-DETAILS for more information)

						Confirmed Pass	Confirmed Fail
1.	Total Conditioned Floor Area	2,135 ft²	5.	Number of Floors Above Grade	1		
2.	Total Unconditioned Floor Area	4,239 ft²	6.	Number of Floors Below Grade	0		
3.	Addition Conditioned Floor Area	0 ft²					
4.	Addition Unconditioned Floor Area	0 ft²					

7. Opaque Surfaces & Orientation	8. Total Gross Surface Area	9. Total Fenestration Area	10. Window to Wall Ratio	Pass	Fail
North Wall	104 ft²	12 ft²	11.7%	☐	☐
East Wall	565 ft²	108 ft²	19.1%	☐	☐
South Wall	74 ft²	12 ft²	16.4%	☐	☐
West Wall	671 ft²	0 ft²	00.0%	☐	☐
Total	**1,415 ft²**	**132 ft²**	**09.4%**	☐	☐
Roof	2,135 ft²	0 ft²	00.0%	☐	☐

Project Name:	Granada Hills Pool Renovation	NRCC-PRF-01-E	Page 4 of 21
Project Address:	16730 Chatsworth Street Granada Hills 91344	Calculation Date/Time:	18:16, Wed, Jun 27, 2018
Compliance Scope:	ExistingAlteration	Input File Name:	Granada Hills Pool Renovation_NR T24_6-26-2018.cibd16x

G. COMPLIANCE PATH & CERTIFICATE OF COMPLIANCE SUMMARY

The following building components are only eligible for prescriptive compliance. Indicate which are relevant to the project.

Yes	NA	Prescriptive Requirement	Compliance Forms
☒	☐	Lighting (Indoor Unconditioned) §140.6	NRCC-LTI-01 / 02 / 03 / 04 / 05-E
☐	☒	Lighting (Outdoor) §140.7	NRCC-LTO-01 / 02 / 03-E
☐	☒	Lighting (Sign) §140.8	NRCC-LTS-01-E
☐	☒	Solar Thermal Water Heating: §140.5	NRCC-STH-01-E

The following building components may have mandatory requirements per Part 6. Indicate which are relevant to the project.

Yes	NA	Mandatory Requirement	Compliance Forms
☐	☒	Commissioning: §120.8 Simple Systems	NRCC-CXR-01 / 02 / 03 / 05-E
☐	☒	Complex Systems	NRCC-CXR-01 / 02 / 04 / 05-E
☐	☒	Electrical: §130.5	NRCC-ELC-01-E
☐	☒	Solar Ready: §110.10	NRCC-SRA-01 / 02-E
☐	☒	Covered Process: §120.6	NRCC-PRC-01-E
☐	☒	Parking Garage	NRCC-PRC-02-E
☐	☒	Commercial Refrigeration	NRCC-PRC-05-E
☐	☒	Warehouse Refrigeration	NRCC-PRC-06/07/08-E
☐	☒	Compressed Air	NRCC-PRC-10-E
☐	☒	Process Boilers	NRCC-PRC-11-E

Project Name:	Granada Hills Pool Renovation	NRCC-PRF-01-E	Page 1 of 21
Project Address:	16730 Chatsworth Street Granada Hills 91344	Calculation Date/Time:	18:16, Wed, Jun 27, 2018
Compliance Scope:	ExistingAlteration	Input File Name:	Granada Hills Pool Renovation_NR T24_6-26-2018.cibd16x

A. PROJECT GENERAL INFORMATION

1.	Project Location (city)	Granada Hills	8.	Standards Version	Compliance2016
2.	CA Zip Code	91344	9.	Compliance Software (version)	EnergyPro 7.1
3.	Climate Zone	9	10.	Weather File	VAN-NUYS_722886_CZ2010.epw
4.	Total Conditioned Floor Area in Scope	2,135 ft²	11.	Building Orientation (deg)	(N) 0 deg
5.	Total Unconditioned Floor Area	4,239 ft²	12.	Permitted Scope of Work	ExistingAlteration
6.	Total # of Stories (Habitable Above Grade)	1	13	Building Type(s)	Nonresidential
7.	Total # of dwelling units	0	14	Gas Type	NaturalGas

B. COMPLIANCE RESULTS FOR PERFORMANCE COMPONENTS (Annual TDV Energy Use, kBtu/ft²-yr) | **§ 140.1**

BUILDING COMPLIES

1. Energy Component	2. Standard Design (TDV)	3. Proposed Design (TDV)	4. Compliance Margin (TDV)	5. Percent Better than Standard
Space Heating	3.95	5.40	-1.45	-36.7%
Space Cooling	45.44	33.28	12.16	26.8%
Indoor Fans	73.50	15.01	58.49	79.6%
Heat Rejection	--	--	--	--
Pumps & Misc.	--	--	--	--
Domestic Hot Water	7.67	9.27	-1.60	-20.9%
Indoor Lighting	48.53	48.53	--	0.0%
COMPLIANCE TOTAL	**179.09**	**111.49**	**67.60**	**37.7%**
Receptacle	56.32	56.32	0.0	0.0%
Process	--	--	--	--
Other Ltg	--	--	--	--
TOTAL	**235.41**	**167.81**	**67.6**	**28.7%**

Project Name:	Granada Hills Pool Renovation	NRCC-PRF-01-E	Page 8 of 21
Project Address:	16730 Chatsworth Street Granada Hills 91344	Calculation Date/Time:	18:16, Wed, Jun 27, 2018
Compliance Scope:	ExistingAlteration	Input File Name:	Granada Hills Pool Renovation_NR T24_6-26-2018.cibd16x

J. FENESTRATION ASSEMBLY SUMMARY | **§ 110.6** | **Confirmed**

1. Fenestration Assembly Name / Tag or I.D.	2. Fenestration Type / Product Type / Frame Type	3. Certification Method[1]	4. Assembly Method	5. Area ft²	6. Overall U-factor	7. Overall SHGC	8. Overall VT	9. Status[2]	Pass	Fail
Double Metal Clear	VerticalFenestration FixedWindow MetalFraming	Default Performance	SiteBuilt	132	0.71	0.73	0.77	E	☐	☐

[1] *Newly installed fenestration shall have a certified NFRC Label Certificate or use the CEC efault tables found in Table 110.6-A and Table 110.6-B. Center of Glass (COG) values are for the glass only, determined by the manufacturer, and are shown for ease of verification. Site-built fenestration values are calculated per Nonresidential Appendix NA6 and are used in the analysis.*
[2] *Status: N - New, A – Altered, E – Existing*

Taking compliance credit for fenestration shading devices? (if "Yes", see NRCC-PRF-ENV-DETAILS for more information) | No

K. OPAQUE SURFACE ASSEMBLY SUMMARY | **§ 120.7/ § 140.3** | **Confirmed**

1. Surface Name	2. Surface Type	3. Area (ft²)	4. Framing Type	5. Cavity R-Value	6. Continuous R-Value	7. U-Factor / F-Factor / C-Factor	8. Status[1]	Pass	Fail
9 Brick Wall6	ExteriorWall	5399	NA	0	NA	J-Factor: 0.176	E	☐	☐
Slab On Grade8	UndergroundFloor	6374	NA	0	NA	F-Factor: 0.730	E	☐	☐
R-13 Roof Attic10	Roof	6374	Wood	13	NA	J-Factor: 0.067	E	☐	☐
R-0 Wall Metal Stud25	InteriorWall	258	NA	0	18	J-Factor: 0.048	E	☐	☐

[1] *Status: N - New, A – Altered, E – Existing*

L. ROOFING PRODUCT SUMMARY | **§ 140.3** | **Confirmed**

1. Product Type	2. Product Density (lb/ft³)	3. Aged Solar Reflectance	4. Thermal Emittance	5. SRI	6. Cool Roof Credit	7. Roofing Product Description	Pass	Fail
R-13 Roof Attic10	4.65104	0.08	0.75	NA	No	NA	☐	☐

Project Name:	Granada Hills Pool Renovation	NRCC-PRF-01-E	Page 5 of 21
Project Address:	16730 Chatsworth Street Granada Hills 91344	Calculation Date/Time:	18:16, Wed, Jun 27, 2018
Compliance Scope:	ExistingAlteration	Input File Name:	Granada Hills Pool Renovation_NR T24_6-26-2018.cibd16x

H. CERTIFICATE OF INSTALLATION, CERTIFICATE OF ACCEPTANCE & CERTIFICATE OF VERIFICATION SUMMARY (NRCI/NRCA/NRCV) –
Documentation Author to indicate which Certificates must be submitted for the features to be recognized for compliance
(Retain copies and verify forms are completed and signed to post in field for Field Inspector to verify).
See Tables G. and H. in MCH and LTI Details Sections for Acceptance Tests and forms by equipment.

Building Component	Compliance Forms *(required for submittal)*	Confirmed Pass	Confirmed Fail
Envelope	☒ NRCI-ENV-01-E - For all buildings	☐	☐
	☒ NRCA-ENV-02-F- NFRC Label verification for fenestration	☐	☐
Mechanical	☒ NRCI-MCH-01-E - For all buildings with Mechanical Systems	☐	☐
	☒ NRCA-MCH-02-A- Outdoor Air	☐	☐
	☒ NRCA-MCH-03-A – Constant Volume Single Zone HVAC	☐	☐
	☐ NRCA-MCH-04-H- Air Distribution Duct Leakage	☐	☐
	☒ NRCA-MCH-05-A- Air Economizer Controls	☐	☐
	☐ NRCA-MCH-06-A- Demand Control Ventilation	☐	☐
	☒ NRCA-MCH-07-A – Supply Fan Variable Flow Controls	☐	☐
	☐ NRCA-MCH-08-A- Valve Leakage Test	☐	☐
	☐ NRCA-MCH-09-A – Supply Water Temp Reset Controls	☐	☐
	☐ NRCA-MCH-10-A- Hydronic System Variable Flow Controls	☐	☐
	☐ NRCA-MCH-11-A – Auto Demand Shed Controls	☐	☐
	☐ NRCA-MCH-12-A- Packaged Direct Expansion Units	☐	☐
	☐ NRCA-MCH-13-A- Air Handling Units and Zone Terminal Units	☐	☐
	☐ NRCA-MCH-14-A- Distributed Energy Storage	☐	☐
	☐ NRCA-MCH-15-A – Thermal Energy Storage	☐	☐
	☐ NRCA-MCH-16-A- Supply Air Temp Reset Controls	☐	☐
	☐ NRCA-MCH-17-A – Condensate Water Temp Reset Controls	☐	☐
	☐ NRCA-MCH-18-A- Energy Management Controls Systems	☐	☐
	☐ NRCV-MCH-04-H- Duct Leakage Test	☐	☐

Project Name:	Granada Hills Pool Renovation	NRCC-PRF-01-E	Page 2 of 21
Project Address:	16730 Chatsworth Street Granada Hills 91344	Calculation Date/Time:	18:16, Wed, Jun 27, 2018
Compliance Scope:	ExistingAlteration	Input File Name:	Granada Hills Pool Renovation_NR T24_6-26-2018.cibd16x

C. PRIORITY PLAN CHECK/ INSPECTION ITEMS (in order of highest to lowest TDV energy savings)

1st	Indoor Fans: Check envelope and mechanical
2nd	Space Cooling: Check envelope and mechanical
3rd	Heat Rejection: Check envelope and mechanical
4th	Pumps & Misc.: Check mechanical
5th	Indoor Lighting: Check lighting
6th	Space Heating: Check envelope and mechanical
7th	Domestic Hot Water: Check mechanical

Compliance Margin By Energy Component (from Table B column 4)

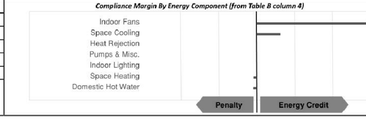

D. EXCEPTIONAL CONDITIONS
This project includes Domestic Hot Water in the analysis. Please verify that Domestic Hot Water is included in the design for the permitted scope of work.

E. HERS VERIFICATION
This Section Does Not Apply

F. ADDITIONAL REMARKS
None Provided

BUREAU OF ENGINEERING OFFICIAL RECORD

Project Name:	Granada Hills Pool Renovation	NRCC-PRF-01-E	Page 9 of 21
Project Address:	16730 Chatsworth Street Granada Hills 91344	Calculation Date/Time:	18:16, Wed, Jun 27, 2018
Compliance Scope:	ExistingAlteration	Input File Name:	Granada Hills Pool Renovation_NR T24_6-26-2018.cibd16x

M. HVAC SYSTEM SUMMARY (see NRCC-PRF-MCH-DETAILS for more information) | **§ 110.1 / § 110.2**

Dry System Equipment [1] (Fan & Economizer info included below in Table N) | Confirmed

1. Equip Name	2. Equip Type	3. System Type (Simple [2] or Complex [3])	4. Qty	5. Total Heating Output (kBtu/h)	6. Supp Heat Source (Y/N)	7. Supp Heat Output (kBtuh)	8. Total Cooling Output (kBtu/h)	9. Efficiency: Cooling	9. Efficiency: Heating	10. Acceptance Testing Required? (Y/N) [4]	11. Status[5]	Pass	Fail
FC-0.75/1 (First Aid 106)	SZHP (Split1Phase)	Simple	1	10	No	0	9	SEER-14.0 / EER-12.2	HSPF-8.2	Yes	N	☐	☐
FC-1/1 (Lifeguard 107)	SZHP (Split1Phase)	Simple	1	14	No	0	12	SEER-14.0 / EER-12.2	HSPF-8.2	Yes	N	☐	☐
FC-1.5/1 (Check-In 105)	SZHP (Split3Phase)	Simple	1	21	No	0	17	SEER-14.0 / EER-12.2	HSPF-8.2	Yes	N	☐	☐
RH-1-3	HV (NA)	Simple	3	40	No	0	0	NA	AFUE-98.0	Yes	N	☐	☐
RH-3-6	HV (NA)	Simple	3	40	No	0	0	NA	AFUE-98.0	Yes	N	☐	☐
FC-1A/ CU-1A	SZAC (Split1Phase)	Simple	1	0	No	0	12	SEER-22.7 / EER-12.5	NA	Yes	N	☐	☐

[1] *Dry System Equipment includes furnaces, air handling units, heat pumps, etc.*
[2] *Simple Systems must complete NRCC-CXR-03-E commissioning design review form*
[3] *Complex Systems must complete NRCC-CXR-04-E commissioning design review form*
[4] *A summary of which acceptance tests are applicable is provided in NRCC-PRF-MCH-DETAILS*
[5] *Status: N - New, A – Altered, E – Existing*

Wet System Equipment [1]								Pumps					Confirmed	
12. Equip Name	13. Equip Type	14. Qty	15. Vol (gal)	16. Rated Capacity (kBtu/h)	17. Efficiency	18. Standby Loss	19. Tank Ext. R Value	20. Qty	21. GPM	22. HP	23. VSD (Y/N)	24. Status[2]	Pass	Fail
Standard Gas 50 gal or Le2	Storage	1	50	40	EF: 0.575	NA	NA	NA	NA	NA	No	N	☐	☐

[1] *Wet System Equipment includes boilers, chillers, cooling towers, water heaters, etc.*
[2] *Status: N - New, A – Altered, E – Existing*

Discrepancy between modeled and designed equipment sizing? (if "Yes", see Table F. "Additional Remarks" for an explanation) | No

Project Name:	Granada Hills Pool Renovation	NRCC-PRF-01-E	Page 6 of 21
Project Address:	16730 Chatsworth Street Granada Hills 91344	Calculation Date/Time:	18:16, Wed, Jun 27, 2018
Compliance Scope:	ExistingAlteration	Input File Name:	Granada Hills Pool Renovation_NR T24_6-26-2018.cibd16x

H. CERTIFICATE OF INSTALLATION, CERTIFICATE OF ACCEPTANCE & CERTIFICATE OF VERIFICATION SUMMARY (NRCI/NRCA/NRCV) –
Documentation Author to indicate which Certificates must be submitted for the features to be recognized for compliance
(Retain copies and verify forms are completed and signed to post in field for Field Inspector to verify).
See Tables G. and H. in MCH and LTI Details Sections for Acceptance Tests and forms by equipment.

Building Component	Compliance Forms *(required for submittal)*	Confirmed Pass	Confirmed Fail
Plumbing	☒ NRCI-PLB-01-E - For all buildings with Plumbing Systems	☐	☐
	☐ NRCI-PLB-02-E - required on central systems in high-rise residential, hotel/motel application.	☐	☐
	☐ NRCI-PLB-03-E - Single dwelling unit systems in high-rise residential, hotel/motel application.	☐	☐
	☐ NRCI-PLB-21-E - HERS verified central systems in high-rise residential, hotel/motel application.	☐	☐
	☐ NRCI-PLB-22-E - HERS verified single dwelling unit systems in high-rise residential, hotel/motel application.	☐	☐
	☐ NRCV-PLB-21-H- HERS verified central systems in high-rise residential, hotel/motel application.	☐	☐
	☐ NRCV-PLB-22-H - HERS verified single dwelling unit systems in high-rise residential, hotel/motel application.	☐	☐
	☐ NRCI-STH-01-E - Any solar water heating.	☐	☐
Indoor Lighting	☒ NRCI-LTI-01-E - For all buildings	☐	☐
	☐ NRCI-LTI-02-E - Lighting control system, or for an Energy Management Control System (EMCS)	☐	☐
	☐ NRCI-LTI-03-E - Line-voltage track lighting integral current limiter, or for a supplementary overcurrent protection panel used to energize only line-voltage track lighting	☐	☐
	☐ NRCI-LTI-04-E - Two interlocked systems serving an auditorium, a convention center, a conference room, or a theater	☐	☐
	☐ NRCI-LTI-05-E - Lighting Control Credit Power Adjustment Factor (PAF)	☐	☐
	☐ NRCI-LTI-06-E - Additional wattage installed in a video conferencing studio	☐	☐
	☐ NRCA-LTI-02-A - Occupancy sensors and automatic time switch controls.	☐	☐
	☐ NRCA-LTI-03-A - Automatic daylighting controls	☐	☐
	☐ NRCA-LTI-04-A - Demand responsive lighting controls	☐	☐
Outdoor Lighting	☐ NRCI-LTO-01-E – Outdoor Lighting	☐	☐
	☐ NRCI-LTO-02-E- EMCS Lighting Control System	☐	☐
	☐ NRCA-LTO-02-A - Outdoor Lighting Control	☐	☐
Sign Lighting	☐ NRCI-LTS-01-E – Sign Lighting	☐	☐
Electrical	☐ NRCI-ELC-01-E - Electrical Power Distribution	☐	☐
Photovoltaic	☐ NRCI-SPV-01-E Photovoltaic Systems	☐	☐

Project Name:	Granada Hills Pool Renovation	NRCC-PRF-01-E	Page 3 of 21
Project Address:	16730 Chatsworth Street Granada Hills 91344	Calculation Date/Time:	18:16, Wed, Jun 27, 2018
Compliance Scope:	ExistingAlteration	Input File Name:	Granada Hills Pool Renovation_NR T24_6-26-2018.cibd16x

G. COMPLIANCE PATH & CERTIFICATE OF COMPLIANCE SUMMARY

Identify which building components use the performance or prescriptive path for compliance. "NA"= not in project
For components that utilize the performance path, indicate the sheet number that includes mandatory notes on plans.

Building Component	Compliance Path	Compliance Forms *(required for submittal)*	Location of Mandatory Notes on Plans
Envelope	☒ Performance	NRCC-PRF-ENV-DETAILS (section of the NRCC-PRF-01-E)	
	☐ Prescriptive	NRCC-ENV-01 / 02 / 03 / 04 / 05 / 06-E	
	☐ NA		
Mechanical	☒ Performance	NRCC-PRF-MCH-DETAILS (section of the NRCC-PRF-01-E)	
	☐ Prescriptive	NRCC-MCH-01 / 02 / 03 / 04 / 05 / 06 / 07-E	
	☐ NA		
Domestic Hot Water	☒ Performance	NRCC-PRF-PLB-DETAILS (section of the NRCC-PRF-01-E)	
	☐ Prescriptive	NRCC-PLB-01-E	
	☐ NA		
Lighting (Indoor Conditioned)	☒ Performance	NRCC-PRF-LTI-DETAILS (section of the NRCC-PRF-01-E)	
	☐ Prescriptive	NRCC-LTI-01 / 02 / 03 / 04 / 05-E	
	☐ NA		
Covered Process: Commercial Kitchens	☐ Performance	S2 (section of the NRCC-PRF-01-E)	
	☐ Prescriptive	NRCC-PRC-01/ 03-E	
	☒ NA		
Covered Process: Computer Rooms	☐ Performance	S3 (section of the NRCC-PRF-01-E)	
	☐ Prescriptive	NRCC-PRC-01/ 04-E	
	☒ NA		
Covered Process: Laboratory Exhaust	☐ Performance	S4 (section of the NRCC-PRF-01-E)	
	☐ Prescriptive	NRCC-PRC-01/ 09-E	
	☒ NA		

THE CITY OF LOS ANGELES OR ITS OFFICERS OR AGENTS SHALL NOT BE RESPONSIBLE FOR THE ACCURACY OR COMPLETENESS OF ELECTRONIC COPIES OF THIS PLAN SHEET.
FILE PATH: V:\17019.00 Granada Hills Pool Renovation\Hvac\M0.20 Title 24.dwg
SHEET ISSUE DATE: 03 JULY 2018
REVISION DATES: (DESIGN STAGE ONLY)
DEPARTMENT OF PUBLIC WORKS
CITY OF LOS ANGELES
BUREAU OF ENGINEERING
ENGINEERING
CITY OF LOS ANGELES
NO. DATE BY REVISION DESCRIPTION
BUILDING NO. –
INDEX NO. RP-300118
CITY ENGINEER DATE:
VERTICAL CONTROL:
HORIZONTAL CONTROL:
GARY LEE MOORE, PE, ENV SP
ARCHITECTURAL DIVISION
ARCHITECT: JOHN SPARANO LIC. NO.:
DESIGNED BY: MAROKO & SHWE, INC.
DRAWN BY: N.W. S.N
CHECKED BY: J.S
APPROVED BY:
SHEET TITLE: TITLE 24
PROJECT: GRANADA HILLS POOL AND BATHHOUSE REPLACEMENT PROJECT
ADDRESS: 16730 CHATSWORTH STREET GRANADA HILLS, CA 91344
BID SET
PROJECT ISSUE DATE: 06/22/21
WORK ORDER NO. #E170517
PLAN FILE NO.
DRAWING NO. M0.20
SHEET – OF – SHEETS
PLOTTED: 11/30/2018 3:13:09 PM
Do not scale drawing - use figured dimensions only

Project Name:	Granada Hills Pool Renovation	NRCC-PRF-01-E	Page 16 of 21
Project Address:	16730 Chatsworth Street Granada Hills 91344	Calculation Date/Time:	18:16, Wed, Jun 27, 2018
Compliance Scope:	ExistingAlteration	Input File Name:	Granada Hills Pool Renovation_NR T24_6-26-2018.cibd16x

NRCC-PRF-MCH-DETAILS -SECTION START-

A. MECHANICAL VENTILATION AND REHEAT *(Adapted from 2016-NRCC-MCH-03-E)* — Confirmed

1. DESIGN AIR FLOWS								2. VENTILATION (§ 120.1)										Confirmed	
CONDITIONED ZONE NAME	HEATING/COOLING SYSTEM ID	DESIGN PRIMARY AIR FLOW (CFM)	DESIGN PRIMARY MINIMUM AIR FLOW (CFM)	MINIMUM PRIMARY AIR FLOW FRACTION	MAXIMUM REHEAT SUM FLOW (CFM)	MAXIMUM REHEAT AIR FLOW FRACTION	DDC CONTROL? (Y/N)	VENT. SYSTEM ID	CONDITIONED AREA (ft2)	MIN. VENT PER AREA (CFM/ft2)	DESIGN NUM. OF PEOPLE	MIN. VENT PER PERSON (CFM/person)	RECO'D VENT AIR FLOW (CFM)	DESIGN VENT AIR FLOW (CFM)	TRANSFER AIRFLOW (CFM)	DCV? (Y/N)	Operable Window Interlock § 140.4(k) (Y/N)	Pass	Fail
1-First Aid 106	FC-0.75/1 (First Aid 106)	265	NA	NA	NA	NA	N	FC-0.75/1 (First Aid 106)	94	NA	1	15.0	14	14	NA	N	NA	☐	☐
2-Lifeguard 107	FC-1/1 (Lifeguard 107)	283	NA	NA	NA	NA	N	FC-1/1 (Lifeguard 107)	195	NA	2	15.0	29	29	NA	N	NA	☐	☐
3-Check-In 105	FC-1.5/1 (Check-In 105)	424	NA	NA	NA	NA	N	FC-1.5/1 (Check-In 105)	213	NA	2	15.0	32	32	NA	N	NA	☐	☐
9-Mens Changing 110	RH-1-3	65	NA	NA	NA	NA	N	RH-1-3	513	NA	10	15.0	154	154	NA	N	NA	☐	☐
10-Mens Shower 118	RH-1-3	35	NA	NA	NA	NA	N	RH-1-3	272	NA	3	15.0	41	41	NA	N	NA	☐	☐
13-Womens Changing 111	RH-3-6	65	NA	NA	NA	NA	N	RH-3-6	513	NA	10	15.0	154	154	NA	N	NA	☐	☐
14-Womens Shower 119	RH-3-6	35	NA	NA	NA	NA	N	RH-3-6	272	NA	3	15.0	41	41	NA	N	NA	☐	☐
29-Elec 123	FC-1A/ CU-1A	338	NA	NA	NA	NA	N	FC-1A/ CU-1A	63	NA	0	50.0	9	9	NA	N	NA	☐	☐
								TOTAL	6,374		NA		NA	NA	NA			☐	☐

Project Name:	Granada Hills Pool Renovation	NRCC-PRF-01-E	Page 13 of 21
Project Address:	16730 Chatsworth Street Granada Hills 91344	Calculation Date/Time:	18:16, Wed, Jun 27, 2018
Compliance Scope:	ExistingAlteration	Input File Name:	Granada Hills Pool Renovation_NR T24_6-26-2018.cibd16x

S3. COVERED PROCESS SUMMARY – COMPUTER ROOMS — § 140.9

This Section Does Not Apply

S4. COVERED PROCESS SUMMARY – LABORATORY EXHAUSTS — § 140.9

This Section Does Not Apply

T. UNMET LOAD HOURS

This Section Does Not Apply

U. ENERGY USE SUMMARY

Energy Component	Standard Design Site (MWh)	Proposed Design Site (MWh)	Margin (MWh)	Standard Design Site (MBtu)	Proposed Design Site (MBtu)	Margin (MBtu)
Space Heating	--	0.1	--	5.0	5.9	-0.9
Space Cooling	3.0	2.0	1.0	--	--	--
Indoor Fans	7.0	1.4	5.6	--	--	--
Heat Rejection	--	--	--	--	--	--
Pumps & Misc.	--	--	--	--	--	--
Domestic Hot Water	--	--	--	11.4	13.7	-2.3
Indoor Lighting	4.3	4.3	0.0	--	--	--
COMPLIANCE TOTAL	**14.3**	**7.8**	**6.5**	**16.4**	**19.6**	**-3.2**
Receptacle	4.9	4.9	0.0	--	--	--
Process	--	--	--	--	--	--
Other Ltg	--	--	--	--	--	--
TOTAL	**19.2**	**12.7**	**6.5**	**16.4**	**19.6**	**-3.2**

Project Name:	Granada Hills Pool Renovation	NRCC-PRF-01-E	Page 10 of 21
Project Address:	16730 Chatsworth Street Granada Hills 91344	Calculation Date/Time:	18:16, Wed, Jun 27, 2018
Compliance Scope:	ExistingAlteration	Input File Name:	Granada Hills Pool Renovation_NR T24_6-26-2018.cibd16x

N. ECONOMIZER & FAN SYSTEMS SUMMARY[1] — § 140.4 — Confirmed

1.	2.	3.					4.					5.		
Equip Name	Outside Air	Supply Fan					Return Fan					Economizer Type (if present)	Pass	Fail
	CFM	CFM	HP	BHP	TSP (inch WC)	Control	CFM	HP	BHP	TSP (inch WC)	Control			
FC-0.75/1 (First Aid 106)	14	265	0.031	0.031	0.37	ConstantVolume	NA	NA	NA	NA	NA	DifferentialDryBulb	☐	☐
FC-1/1 (Lifeguard 107)	29	283	0.031	0.031	0.35	ConstantVolume	NA	NA	NA	NA	NA	NoEconomizer	☐	☐
FC-1.5/1 (Check-In 105)	32	424	0.023	0.023	0.17	ConstantVolume	NA	NA	NA	NA	NA	NoEconomizer	☐	☐
RH-1-3	65	100	0.020	0.020	0.63	ConstantVolume	NA	NA	NA	NA	NA	NoEconomizer	☐	☐
RH-3-6	65	100	0.020	0.020	0.63	ConstantVolume	NA	NA	NA	NA	NA	NoEconomizer	☐	☐
FC-1A/ CU-1A	9	338	0.100	0.100	0.94	ConstantVolume	NA	NA	NA	NA	NA	NoEconomizer	☐	☐

[1] *Mechanical ventilation calculations and exhaust fans are included in the NRCC-PRF-MCH-DETAILS section*

O. EQUIPMENT CONTROLS — § 120.2 — Confirmed

1. Equip Name	2. Equip Type	3. Controls	Pass	Fail
FC-0.75/1 (First Aid 106)	SZHP	No DCV Controls Differential Drybulb Economizer No Supply Air Temp. Control No Optimum Start No Evaporative Cooler	☐	☐
FC-1/1 (Lifeguard 107)	SZHP	No DCV Controls No Economizer No Supply Air Temp. Control No Optimum Start No Evaporative Cooler	☐	☐
FC-1.5/1 (Check-In 105)	SZHP	No DCV Controls No Economizer No Supply Air Temp. Control No Optimum Start No Evaporative Cooler	☐	☐

Project Name:	Granada Hills Pool Renovation	NRCC-PRF-01-E	Page 17 of 21
Project Address:	16730 Chatsworth Street Granada Hills 91344	Calculation Date/Time:	18:16, Wed, Jun 27, 2018
Compliance Scope:	ExistingAlteration	Input File Name:	Granada Hills Pool Renovation_NR T24_6-26-2018.cibd16x

B. ZONAL SYSTEM AND TERMINAL UNIT SUMMARY — § 140.4

1.	2.	3.	4.		5.	6.	7.			8.			Confirmed	
System ID	System Type	Qty	Rated Capacity (kBtuh)		Economizer	Zone Name	Airflow (cfm)			Fan			Pass	Fail
			Heating	Cooling			Design	Min.	Min. Ratio	BHP	Cycles	ECM Motor		
1-First Aid 106-Trm	Uncontrolled	1	NA	NA	NA	1-First Aid 106	265	NA	NA	NA	NA	☐	☐	☐
2-Lifeguard 107-Trm	Uncontrolled	1	NA	NA	NA	2-Lifeguard 107	283	NA	NA	NA	NA	☐	☐	☐
3-Check-In 105-Trm	Uncontrolled	1	NA	NA	NA	3-Check-In 105	424	NA	NA	NA	NA	☐	☐	☐
10-Mens Shower 118-Trm	Uncontrolled	3	NA	NA	NA	10-Mens Shower 118	35	NA	NA	NA	NA	☐	☐	☐
9-Mens Changing 110-Trm	Uncontrolled	3	NA	NA	NA	9-Mens Changing 110	65	NA	NA	NA	NA	☐	☐	☐
14-Womens Shower 119-Trm	Uncontrolled	3	NA	NA	NA	14-Womens Shower 119	35	NA	NA	NA	NA	☐	☐	☐
13-Womens Changing 111-Trm	Uncontrolled	3	NA	NA	NA	13-Womens Changing 111	65	NA	NA	NA	NA	☐	☐	☐
29-Elec 123-Trm	Uncontrolled	1	NA	NA	NA	29-Elec 123	338	NA	NA	NA	NA	☐	☐	☐

C. EXHAUST FAN SUMMARY

This Section Does Not Apply

D. DHW EQUIPMENT SUMMARY – *(Adapted from NRCC-PLB-01)* — § 110.3 — Confirmed

1.	2.	3.	4.	5.	6.	7.	8.	9.	10.	11.	12.	Pass	Fail
DHW Name	Heater Element Type	Tank Type	Qty	Tank Vol (gal)	Rated Input (kBtu/h)	Efficiency	Tank Insulation R-value (Int/Ext)	Pilot Energy (Btu/h)	Standby Loss	Heat Pump Type	Tank Location or Ambient Condition		
Standard Gas 50 gal or Le2	Gas	Storage	1	50	40	EF: 0.575	NA		0	NA	NA	☐	☐

E. MULTI-FAMILY CENTRAL DHW SYSTEM DETAILS

This Section Does Not Apply

Project Name:	Granada Hills Pool Renovation	NRCC-PRF-01-E	Page 14 of 21
Project Address:	16730 Chatsworth Street Granada Hills 91344	Calculation Date/Time:	18:16, Wed, Jun 27, 2018
Compliance Scope:	ExistingAlteration	Input File Name:	Granada Hills Pool Renovation_NR T24_6-26-2018.cibd16x

DOCUMENTATION AUTHOR'S DECLARATION STATEMENT — § 10-103

I certify that this Certificate of Compliance documentation is accurate and complete.

Documentation Author Name:	Signature:
Company: Maroko & Shwe, Inc.	
Address:	Signature Date:
City/State/Zip:	CEA Identification (If applicable):
Phone:	

RESPONSIBLE PERSON'S DECLARATION STATEMENT

I certify the following under penalty of perjury, under the laws of the State of California:

1. I hereby affirm that I am eligible under the provisions of Division 3 of the Business and Professions Code to sign this document as the person responsible for its preparation; and that I am licensed in the State of California as a civil engineer, mechanical engineer, electrical engineer, or I am a licensed architect.
2. I affirm that I am eligible under the provisions of Division 3 of the Business and Professions Code by section 5537.2 or 6737.3 to sign this document as the person responsible for its preparation; and that I am a licensed contractor performing this work.
3. I affirm that I am eligible under Division 3 of the Business and Professions Code to sign this document because it pertains to a structure or type of work described as exempt pursuant to Business and Professions Code Sections 5537, 5538 and 6737.1.

Responsible Envelope Designer Name:	Signature:	
Company: Sparano + Mooney Architecture		
Address: 642 Moulton Ave	Date Signed:	
City/State/Zip: Los Angeles CA 90031	Declaration Statement Type:	
Phone: (323) 221-6600	Title:	License #:
Responsible Lighting Designer Name:	Signature:	
Company:		
Address:	Date Signed:	
City/State/Zip:	Declaration Statement Type:	
Phone:	Title:	License #:
Responsible Mechanical Designer Name: James H. Shwe	Signature:	
Company: Maroko & Shwe, Inc.		
Address: 1106 B. West Magnolia Blvd	Date Signed:	
City/State/Zip: Burbank CA 91506	Declaration Statement Type:	
Phone: (818) 840-0280	Title:	License #: M-26903

Project Name:	Granada Hills Pool Renovation	NRCC-PRF-01-E	Page 11 of 21
Project Address:	16730 Chatsworth Street Granada Hills 91344	Calculation Date/Time:	18:16, Wed, Jun 27, 2018
Compliance Scope:	ExistingAlteration	Input File Name:	Granada Hills Pool Renovation_NR T24_6-26-2018.cibd16x

O. EQUIPMENT CONTROLS — § 120.2 — Confirmed

1. Equip Name	2. Equip Type	3. Controls	Pass	Fail
RH-1-3	HV	No DCV Controls No Economizer No Supply Air Temp. Control No Optimum Start No Evaporative Cooler	☐	☐
RH-3-6	HV	No DCV Controls No Economizer No Supply Air Temp. Control No Optimum Start No Evaporative Cooler	☐	☐
FC-1A/ CU-1A	SZAC	No DCV Controls No Economizer No Supply Air Temp. Control No Optimum Start No Evaporative Cooler	☐	☐
Granada Hills Pool Renova1 - SHW	Service Hot Water, Primary Only	Fixed Temperature Control, No DDC	☐	☐

P. SYSTEM DISTRIBUTION SUMMARY — § 120.4/ § 140.4(l) — Confirmed

1.	2.	*Dry System Distribution* 3.	4.	5.		Pass	Fail
Equip Name	Equip Type	Duct Leakage and Sealing Required per 140.4(l)	Duct Leakage will be verified per NA1 and NA2	Ducts			
				Insulation R-Value	Location		
FC-0.75/1 (First Aid 106)	SZHP	No	No	8	Unconditioned	☐	☐
FC-1/1 (Lifeguard 107)	SZHP	No	No	8	Unconditioned	☐	☐
FC-1.5/1 (Check-In 105)	SZHP	No	No	8	Unconditioned	☐	☐
RH-1-3	HV	No	No	8	Unconditioned	☐	☐
RH-3-6	HV	No	No	8	Unconditioned	☐	☐
FC-1A/ CU-1A	SZAC	No	No	8	Unconditioned	☐	☐

Does the Project Include Zonal Systems? (if "Yes", see NRCC-PRF-MCH-DETAILS for system information)	No

Project Name:	Granada Hills Pool Renovation	NRCC-PRF-01-E	Page 18 of 21
Project Address:	16730 Chatsworth Street Granada Hills 91344	Calculation Date/Time:	18:16, Wed, Jun 27, 2018
Compliance Scope:	ExistingAlteration	Input File Name:	Granada Hills Pool Renovation_NR T24_6-26-2018.cibd16x

F. SOLAR HOT WATER HEATING SUMMARY (Adapted from NRCC-STH-01)

This Section Does Not Apply

G. MECHANICAL HVAC ACCEPTANCE TESTS & FORMS *(Adapted from 2016-NRCC-MCH-01-E)* — § RA4

Declaration of Required Acceptance Certificates (NRCA) – Acceptance Certificates that may be submitted. (Retain copies and verify forms are completed and signed to post in field for Field inspector to verify).

Test Description		MCH-03-NA	MCH-03-NA	MCH-04-NA	MCH-05-NA	MCH-06-NA	MCH-07-NA	MCH-08-NA	MCH-09-NA	MCH-10-NA	MCH-11-NA	MCH-12-NA	MCH-13-NA	MCH-14-NA	MCH-15-NA	MCH-16-NA	MCH-17-NA	MCH-18-NA	Confirmed	
Equipment Requiring Testing or Verification	# of units	Outdoor Air	Single Zone Unitary	Air Dist. Ducts	Economizer Controls	DCV	Supply Fan VAV	Valve Leakage	Supply Water Temp. Reset	Hot Water Flow Control	Auto Demand Shed Control	FDD for DX Units	Auto FDD for AC & Zone	Dist. Energy Storage DX AC	TES Systems	Supply Air Temp. Reset	Condenser Water Reset Controls	ECMS	Pass	Fail
Granada Hills Pool Renova1 - SHW	1	--	--	--	--	--	--	--	--	--	--	--	--	--	--	--	--	--	☐	☐
FC-0.75/1 (First Aid 106)	1	X	X	--	X	--	X	--	--	--	--	--	--	--	--	--	--	--	☐	☐
FC-1/1 (Lifeguard 107)	1	X	X	--	--	--	--	--	--	--	--	--	--	--	--	--	--	--	☐	☐
FC-1.5/1 (Check-In 105)	1	X	X	--	--	--	--	--	--	--	--	--	--	--	--	--	--	--	☐	☐
RH-1-3	3	X	X	--	--	--	--	--	--	--	--	--	--	--	--	--	--	--	☐	☐
RH-3-6	3	X	X	--	--	--	--	--	--	--	--	--	--	--	--	--	--	--	☐	☐
FC-1A/ CU-1A	1	X	X	--	--	--	--	--	--	--	--	--	--	--	--	--	--	--	☐	☐

Project Name:	Granada Hills Pool Renovation	NRCC-PRF-01-E	Page 15 of 21
Project Address:	16730 Chatsworth Street Granada Hills 91344	Calculation Date/Time:	18:16, Wed, Jun 27, 2018
Compliance Scope:	ExistingAlteration	Input File Name:	Granada Hills Pool Renovation_NR T24_6-26-2018.cibd16x

NRCC-PRF-ENV-DETAILS -SECTION START-

A. OPAQUE SURFACE ASSEMBLY DETAILS — Confirmed

1. Surface Name	2. Surface Type	3. Description of Assembly Layers	4. Notes	Pass	Fail
9 Brick Wall6	ExteriorWall	Brick - 48 lb/ft3 - 3 5/8 in. Brick - 48 lb/ft3 - 3 5/8 in.		☐	☐
Slab On Grade8	UndergroundFloor	Slab Type = UnheatedSlabOnGrade Insulation Orientation = None Insulation R-Value = R0		☐	☐
R-13 Roof Attic10	Roof	Asphalt shingles - 1/4 in. Vapor permeable felt - 1/8 in. Plywood - 1/2 in. Air - Cavity - Wall Roof Ceiling - 4 in. or more Wood framed roof, 24in. OC, 3.5 in., R-13 Gypsum Board - 1/2 in.		☐	☐
R-0 Wall Metal Stud25	InteriorWall	Stucco - 7/8 in. Vapor permeable felt - 1/8 in. Air - Wall - 3 1/2 in. Glass fiber batt - 5 1/2 in. R19 (CEC Default) Gypsum Board - 5/8 in.		☐	☐

B. OVERHANG DETAILS (Adapted from NRCC-ENV-02-E)

This Section Does Not Apply

C. OPAQUE DOOR SUMMARY — Confirmed

1. Opaque Door Assembly Name / Tag or I.D.	2. Door Type	3. Certification Method	4. Operation	5. Area	6. Overall U-factor	7. Status[1]	Pass	Fail
Metal Door32	MetalUninsulatedDoubleLayerDoor	DefaultPerformance	Swinging	329	0.700	E	☐	☐
Metal Roll-Up Door37	MetalUninsulatedDoubleLayerDoor	DefaultPerformance	Swinging	35	0.700	E	☐	☐

[1] *Status: N - New, A – Altered, E – Existing*

Project Name:	Granada Hills Pool Renovation	NRCC-PRF-01-E	Page 12 of 21
Project Address:	16730 Chatsworth Street Granada Hills 91344	Calculation Date/Time:	18:16, Wed, Jun 27, 2018
Compliance Scope:	ExistingAlteration	Input File Name:	Granada Hills Pool Renovation_NR T24_6-26-2018.cibd16x

Does the Project Include a Solar Hot Water System? (if "Yes", see NRCC-PRF-MCH-DETAILS for system information)	No
Multifamily or Hotel/ Motel Occupancy? (if "Yes", see NRCC-PRF-MCH-DETAILS for DHW system information)	No

Q. INDOOR CONDITIONED LIGHTING GENERAL INFO (see NRCC-PRF-LTI-DETAILS for more info)[3] — § 140.6 — Confirmed

1. Occupancy Type [1,4]	2. Conditioned Floor Area [2] (ft²)	3. Installed Lighting Power (Watts)	4. Lighting Control Credits (Watts)	5. Additional (Custom) Allowance		Pass	Fail
				Area Category Footnotes (Watts)	Tailored Method (Watts)		
Corridors, Restrooms, Stairs, and Support Areas	544	326	0	0	0	☐	☐
Electrical, Mechanical, Telephone Rooms	63	35	0	0	0	☐	☐
Locker/Dressing Room	1,026	718	0	0	0	☐	☐
Office (250 square feet in floor area or less)	502	502	0	0	0	☐	☐
Building Totals:	**2,135**	**1,581**	**0**	**0**	**0**		

[1] *See Table 140.6-C*
[2] *See NRCC-LTI-01-E for unconditioned spaces*
[3] *Lighting information for existing spaces modeled is not included in the table.*
[4] *Multiple entries for an Occupancy Type may be listed in the table as these have been aggregated for Building Stories that have the same floor multiplier.*

R. INDOOR CONDITIONED LIGHTING SCHEDULE (Adapted from NRCC-LTI-01-E)[1] — § 130.0

This Section Does Not Apply

[1] *If lighting power densities were used in the compliance model Building Departments will need to check prescriptive forms for Luminaire Schedule details.*

S1. COVERED PROCESS SUMMARY – ENCLOSED PARKING GARAGES — § 140.9

This Section Does Not Apply

S2. COVERED PROCESS SUMMARY – COMMERCIAL KITCHENS — § 140.9

This Section Does Not Apply

THE CITY OF LOS ANGELES OR ITS OFFICERS OR AGENTS SHALL NOT BE RESPONSIBLE FOR THE ACCURACY OR COMPLETENESS OF ELECTRONIC COPIES OF THIS PLAN SHEET.

FILE PATH: V:\17019.00 Granada Hills Pool Renovation\Hvac\M0.30 Title 24.dwg

SHEET ISSUE DATE: 03 JULY 2018

REVISION DATES: (DESIGN STAGE ONLY)

BUREAU OF ENGINEERING
CITY OF LOS ANGELES
DEPARTMENT OF PUBLIC WORKS

ENGINEERING
CITY OF LOS ANGELES

BUILDING NO. –

INDEX NO. RP-300118

NO.	REVISION DESCRIPTION	DATE	BY

REGISTERED PROFESSIONAL ENGINEER JAMES H. SHWE No. 26903 (Renewal: 9/30/2019) MECHANICAL STATE OF CALIFORNIA

CITY ENGINEER
DATE:
VERTICAL CONTROL:
HORIZONTAL CONTROL:

GARY LEE MOORE, PE, ENV SP
CITY ENGINEER LIC. NO.:

ARCHITECT: JOHN SPARANO LIC. NO.:
DESIGNED BY: MAROKO & SHWE, INC.
DRAWN BY: N.W, S.N
CHECKED BY: J.S
APPROVED BY:

SHEET TITLE: TITLE 24

PROJECT: GRANADA HILLS POOL AND BATHHOUSE REPLACEMENT PROJECT
ADDRESS: 16730 CHATSWORTH STREET GRANADA HILLS, CA 91344

BID SET
PROJECT ISSUE DATE: 06/22/21

WORK ORDER NO. #E170517
PLAN FILE NO.
DRAWING NO. M0.30
SHEET – OF – SHEETS

BUREAU OF ENGINEERING OFFICIAL RECORD

PLOTTED: 11/30/2018 3:14:41 PM

© All drawings, ideas and designs incorporated herein, as an instrument of service, are the property of the City of Los Angeles. They are not to be used in whole or in part for any other project without the written authorization of the City of Los Angeles.

ENVELOPE MANDATORY MEASURES: NONRESIDENTIAL — ENV-MM

Project Name	Date
Granada Hills Pool Renovation	*6/27/2018*

DESCRIPTION

Building Envelope Measures:

§110.8(a):	Installed insulating material shall have been certified by the manufacturer to comply with the California Quality Standards for insulating material, Title 20 Chapter 4, Article 3.
§110.8(c):	All Insulating Materials shall be installed in compliance with the flame spread rating and smoke density requirements of Sections 2602 and 707 of Title 24, Part 2.
§110.8(g):	Heated slab floors shall be insulated according to the requirements in Table 110.8-A.
§110.7(a):	All Exterior Joints and openings in the building that are observable sources of air leakage shall be caulked, gasketed, weatherstripped or otherwise sealed.
§110.6(a):	Manufactured fenestration products and exterior doors shall have air infiltration rates not exceeding 0.3 cfm/ft.² of window area, 0.3 cfm/ft.² of door area for residential doors, 0.3 cfm/ft.² of door area for nonresidential single doors (swinging and sliding), and 1.0 cfm/ft.² for nonresidential double doors (swinging).
§110.6(a):	Fenestration U-factor shall be rated in accordance with NFRC 100, or the applicable default U-factor.
§110.6(a) :	Fenestration SHGC shall be rated in accordance with NFRC 200, or NFRC 100 for site-built fenestration, or the applicable default SHGC.
§110.6(b):	Site Constructed Doors, Windows and Skylights shall be caulked between the unit and the building, and shall be weatherstripped (except for unframed glass doors and fire doors).
§120.7(a):	The opaque portions of the roof/ceiling that separates conditioned spaces from unconditioned spaces or ambient air shall meet the applicable U-Factor requirements as follows: **Metal Building-** The weighted average U-factor of the roof assembly shall not exceed 0.098. **Wood Framed and Others-** The weighted average U-factor of the roof assembly shall not exceed 0.075.
§120.7(b):	The opaque portions of walls that separate conditioned spaces from unconditioned spaces or ambient air shall meet the applicable U-factor as follows: **Metal Building-** The weighted average U-factor of the wall assembly shall not exceed 0.113. **Metal Framed-** The weighted average U-factor of the wall assembly shall not exceed 0.151. **Light Mass Walls-** A 6 inch or greater Hollow Core Concrete Masonry Unit shall have a U-factor not to exceed 0.440. **Heavy Mass Walls-** An 8 inch or greater Hollow Core Concrete Masonry Unit shall have a U-factor not to exceed 0.690. **Wood Framed and Others-** The weighted average U-factor of the wall assembly shall not exceed 0.110. **Spandrel Panels and Opaque Curtain Wall-** The weighted average U-factor of the spandrel panels and opaque curtain wall assembly shall not exceed 0.280. **Demising Walls-**. The opaque portions of framed demising walls shall meet the requirements of Item A or B below: A. Wood framed walls shall be insulated to meet a U-factor not greater than 0.099. B. Metal Framed walls shall be insulated to meet a U-factor not greater than 0.151.
§120.7(c):	The opaque portions of floors and soffits that separate conditioned spaces from unconditioned spaces or ambient air shall meet the applicable U-Factor requirements as follows: **Raised Mass Floors-** Shall have a minimum of 3 inches of lightweight concrete over a metal deck or the weighted average U-factor of the floor assembly shall not exceed 0.269. **Other Floors-**The weighted average U-factor of the floor assembly shall not exceed 0.071.

H. EVAPORATIVE COOLER SUMMARY

This Section Does Not Apply

NRCC-PRF-LTI-DETAILS -SECTION START-

A. INDOOR CONDITIONED LIGHTING CONTROL CREDITS (Adapted from NRCC-LTI-02-E) — **§ 140.6**

This Section Does Not Apply

B. INDOOR CONDITIONED LIGHTING MANDATORY LIGHTING CONTROLS (Adapted from NRCC-LTI-02-E) — **§ 130.1**

This Section Does Not Apply

§130.1(a) = Manual area controls; §130.1(b) = Multi Level; §130.1(c) = Auto Shut-Off; §130.1(d) = Mandatory Daylight; §130.1(e) = Demand Responsive

C. TAILORED METHOD CONDITIONED LIGHTING POWER ALLOWANCE SUMMARY AND CHECKLIST (Adapted from NRCC-LTI-04-E) — **§ 140.6**

General lighting power (see Table D)	0
General lighting power from special function areas (see Table E)	NA
Additional "use it or lose it" (See Table G)	0
Total watts	0

D. GENERAL LIGHTING POWER (Adapted from NRCC-LTI-04-E) — **§ 140.6-D**

This Section Does Not Apply

E. GENERAL LIGHTING FROM SPECIAL FUNCTION AREAS (Adapted from NRCC-LTI-04-E) — **§ 140.6(c) 3H**

Room Number	Primary Function Area	Illuminance Value (LUX)	Room Cavity Ratio (Table G)	Allowed LPD	Floor Area (ft²)	Allowed Watts	Confirmed Pass	Confirmed Fail
NA	NA	NA	NA	NA	NA	NA	☐	☐

Note: Tailored Method for Special Function Areas is not currently implemented

F. ROOM CAVITY RATIO (Adapted from NRCC-LTI-04-E)

Rectangular Spaces							
Room Number	Task/Activity Description	Room Length (ft)	Room Width (ft)	Room Cavity Height (ft)	RCR	Confirmed Pass	Confirmed Fail
NA	NA	NA	NA	NA	NA	☐	☐

Non-Rectangular Spaces

This Section Does Not Apply

Note: All applicable spaces are listed under the Non-Rectangular Spaces table

G. ADDITIONAL "USE IT OR LOSE IT" (Adapted from NRCC-LTI-04-E)

1. Wall Display	2. Combined Floor Display and Task Lighting	3. Combined Ornamental and Special Effects Lighting	4. Very Valuable Merchandise	Allowed Watts	Confirmed #4&4	Confirmed #3&4
0	0	0	0	**0**	☐	☐

5. Wall Display

This Section Does Not Apply

6. Floor Display and Task Lighting

This Section Does Not Apply

7. Combined Ornamental and Special Effects Lighting

This Section Does Not Apply

8. Very Valuable Merchandise

This Section Does Not Apply

H. INDOOR & OUTDOOR LIGHTING ACCEPTANCE TESTS & FORMS (Adapted from NRCC-LTI-01-E and NRCC-LTO-01-E) — **§ 130.4**

Declaration of Required Acceptance Certificates (NRCA) –Acceptance Certificates that must be verified in the field. (Retain copies and verify forms are completed and signed to post in field for Field Inspector to verify).

Test Description		Indoor			Outdoor	Confirmed	
		NRCA-LTI-02-A	NRCA-LTI-03-A	NRCA-LTI-04-A	NRCA-LTO-02-A		
Equipment Requiring Testing or Verification	# of units	Occ Sensors / Auto Time Switch	Auto Daylight	Demand Responsive	Outdoor Controls	Pass	Fail
Occupant Sensors	0	☐	☐	☐	☐	☐	☐
Automatic Time Switch	0	☐	☐	☐	☐	☐	☐
Automatic Daylighting	0	☐	☐	☐	☐	☐	☐

Project Name:	Granada Hills Pool Renovation	NRCC-PRF-01-E	Page 21 of 21
Project Address:	16730 Chatsworth Street Granada Hills 91344	Calculation Date/Time:	18:16, Wed, Jun 27, 2018
Compliance Scope:	Existing&Alteration	Input File Name:	Granada Hills Pool Renovation_NR T24_6-26-2018.cibd16x

H. INDOOR & OUTDOOR LIGHTING ACCEPTANCE TESTS & FORMS (Adapted from NRCC-LTI-01-E and NRCC-LTO-01-E) — **§ 130.4**

Declaration of Required Acceptance Certificates (NRCA) –Acceptance Certificates that must be verified in the field. (Retain copies and verify forms are completed and signed to post in field for Field Inspector to verify).

Test Description		Indoor			Outdoor	Confirmed	
		NRCA-LTI-02-A	NRCA-LTI-03-A	NRCA-LTI-04-A	NRCA-LTO-02-A		
Equipment Requiring Testing or Verification	# of units	Occ Sensors / Auto Time Switch	Auto Daylight	Demand Responsive	Outdoor Controls	Pass	Fail
Demand Responsive	0	☐	☐	☐	☐	☐	☐
Outdoor Controls	0	☐	☐	☐	☐	☐	☐

CA Building Energy Efficiency Standards- 2016 Nonresidential Compliance Report Version: NRCC-PRF-01-E-08082017-4377 Report Generated at: 2018-06-27 18:17:56

BUREAU OF ENGINEERING
OFFICIAL RECORD

THE CITY OF LOS ANGELES OR ITS OFFICERS OR AGENTS SHALL NOT BE RESPONSIBLE FOR THE ACCURACY OR COMPLETENESS OF ELECTRONIC COPIES OF THIS PLAN SHEET.

FILE PATH: V:\17019.00 Granada Hills Pool Renovation\Hvac\M0.40 Title 24.dwg
SHEET ISSUE DATE: 03 JULY 2018

REVISION DATES: (DESIGN STAGE ONLY)

BUREAU OF ENGINEERING
CITY OF LOS ANGELES
DEPARTMENT OF PUBLIC WORKS

ENGINEERING
CITY OF LOS ANGELES

NO.	REVISION DESCRIPTION	DATE	BY

BUILDING NO. -

INDEX NO. RP-300118

REGISTERED PROFESSIONAL ENGINEER — JAMES H. SHWE — No. 26903 — (Renewal: 9/30/2019) — MECHANICAL — STATE OF CALIFORNIA

CITY ENGINEER
DATE:

GARY LEE MOORE, PE, ENV SP
ARCHITECTURAL DIVISION

ARCHITECT: JOHN SPARANO LIC. NO.:
DESIGNED BY: MAROKO & SHWE, INC.
DRAWN BY: N.W. S.N
CHECKED BY: J.S
APPROVED BY:

VERTICAL CONTROL:
HORIZONTAL CONTROL:

SHEET TITLE: TITLE 24

PROJECT: GRANADA HILLS POOL AND BATHHOUSE REPLACEMENT PROJECT
ADDRESS: 16730 CHATSWORTH STREET GRANADA HILLS, CA 91344

BID SET
PROJECT ISSUE DATE: 06/22/21

WORK ORDER NO. #E170517
PLAN FILE NO.
DRAWING NO. M0.40
SHEET - OF - SHEETS

PLOTTED: 11/30/2018 3:15:44 PM

© 2018 Autodesk, Inc. Unauthorized use of Autodesk® software

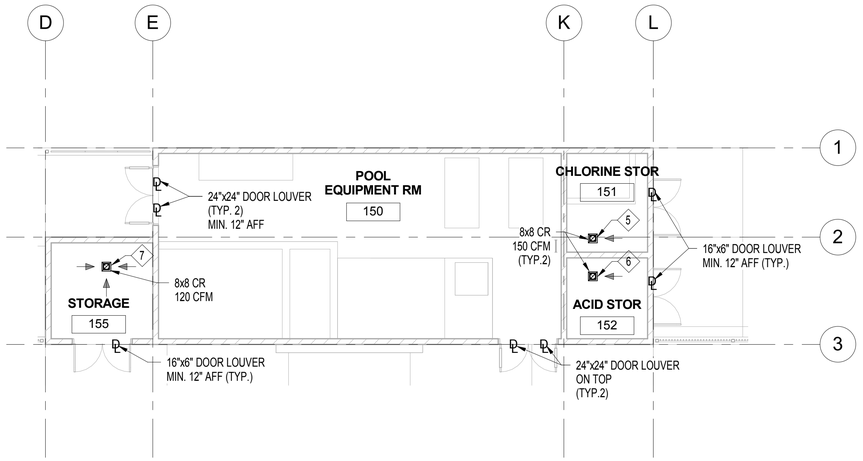

2 POOL EQUIP. BLDG PLAN
1/8" = 1'-0"

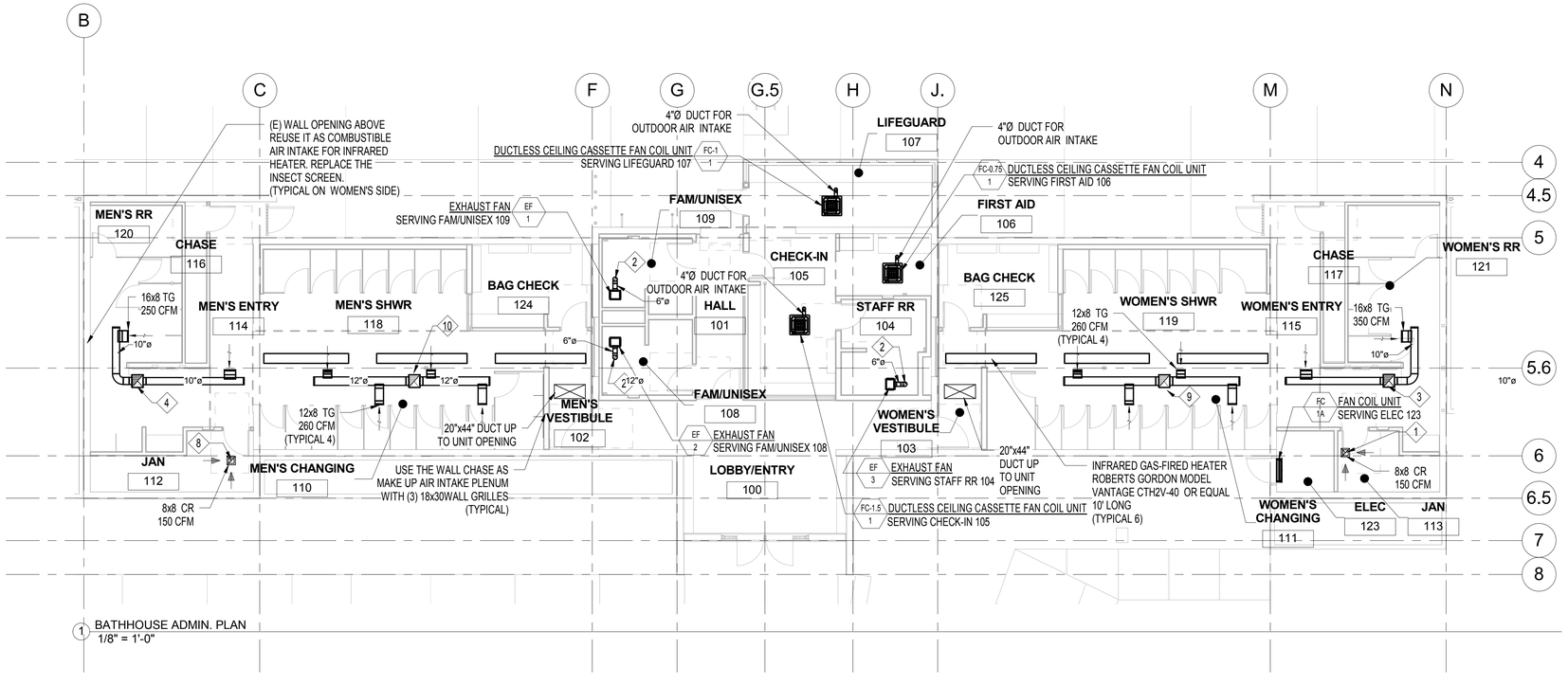

1 BATHHOUSE ADMIN. PLAN
1/8" = 1'-0"

SHEET NOTES:
•

KEY NOTES:

1. 8"x8" E.A DUCT UP TO EF-5 UNIT OPENING.
2. 6" Ø E.A DUCT UP THROUGH ROOF.
3. 16"x18" E.A DUCT UP TO EF-7 UNIT OPENING.
4. 16"x18" E.A DUCT UP TO EF-6 UNIT OPENING.
5. 8"Ø E.A DUCT UP TO EF-9 UNIT OPENING.
6. 8"Ø E.A DUCT UP TO EF-10 UNIT OPENING.
7. 8"Ø E.A DUCT UP TO EF-11 UNIT OPENING.
8. 8"x8" E.A DUCT UP TO EF-4 UNIT OPENING.
9. 16"x18" E.A DUCT UP TO EF-12 UNIT OPENING.
10. 16"x18" E.A DUCT UP TO EF-13 UNIT OPENING.

BUREAU OF ENGINEERING
OFFICIAL RECORD

N

THE CITY OF LOS ANGELES OR ITS OFFICERS OR AGENTS SHALL NOT BE RESPONSIBLE FOR THE ACCURACY OR COMPLETENESS OF ELECTRONIC COPIES OF THIS PLAN SHEET.

TTLB TEMPLATE REVISION DATE: 02/2013
SHEET ISSUE DATE: 01/30/18
FILE PATH: BIM 360://Granada Hills Pool Renovation/17019_Granada Hills Pool Renovation_HVAC Central_R17.rvt

REVISION DATES (DESIGN STAGE ONLY)

DEPARTMENT OF PUBLIC WORKS
BUREAU OF ENGINEERING

ENGINEERING
CITY OF LOS ANGELES

NO.	REVISION DESCRIPTION	DATE	BY

BUILDING NO. -

INDEX NO. RP-300118

GARY LEE MOORE, PE, ENV SP
CITY ENGINEER
DATE: 7/3/2018

ARCHITECTURAL DIVISION
ARCHITECT/ENGINEER: JOHN SPARANO LIC. NO.: LICENSE
DESIGNED BY: MAROKO & SHWE, INC.
DRAWN BY: N.W, S.N
CHECKED BY: J.S
APPROVED BY: Approver

CITY OF LOS ANGELES
VERTICAL CONTROL:
HORIZONTAL CONTROL:

SHEET TITLE: HVAC FLOOR PLANS

PROJECT: GRANADA HILLS POOL AND BATHHOUSE REPLACEMENT PROJECT
ADDRESS: 16730 CHATSWORTH STREET GRANADA HILLS, CA 91344

BID SET
PROJECT ISSUE DATE: 06/22/21

WORK ORDER NO. #E170517
PLAN FILE NO.
DRAWING NO. M2.10
SHEET OF SHEETS

PLOTTED:1/10/2019 2:46:43 PM

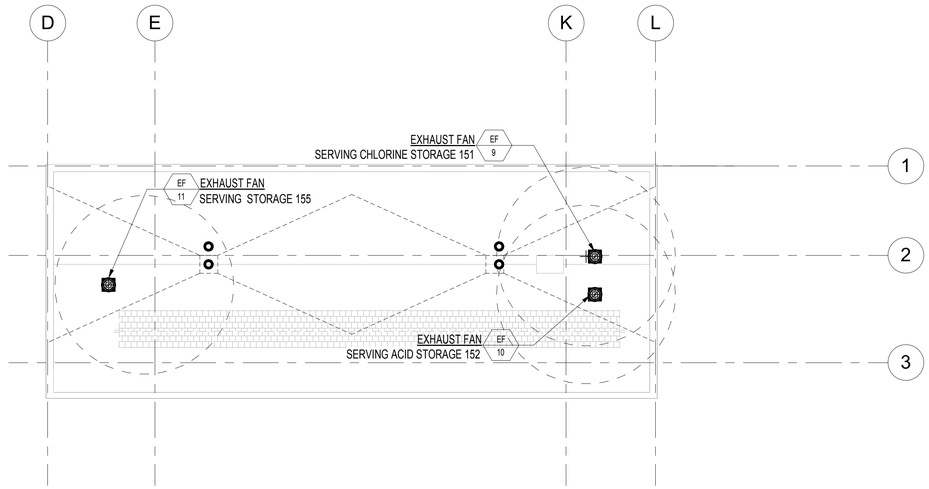

2 POOL EQUIP. BLDG ROOF PLAN
1/8" = 1'-0"

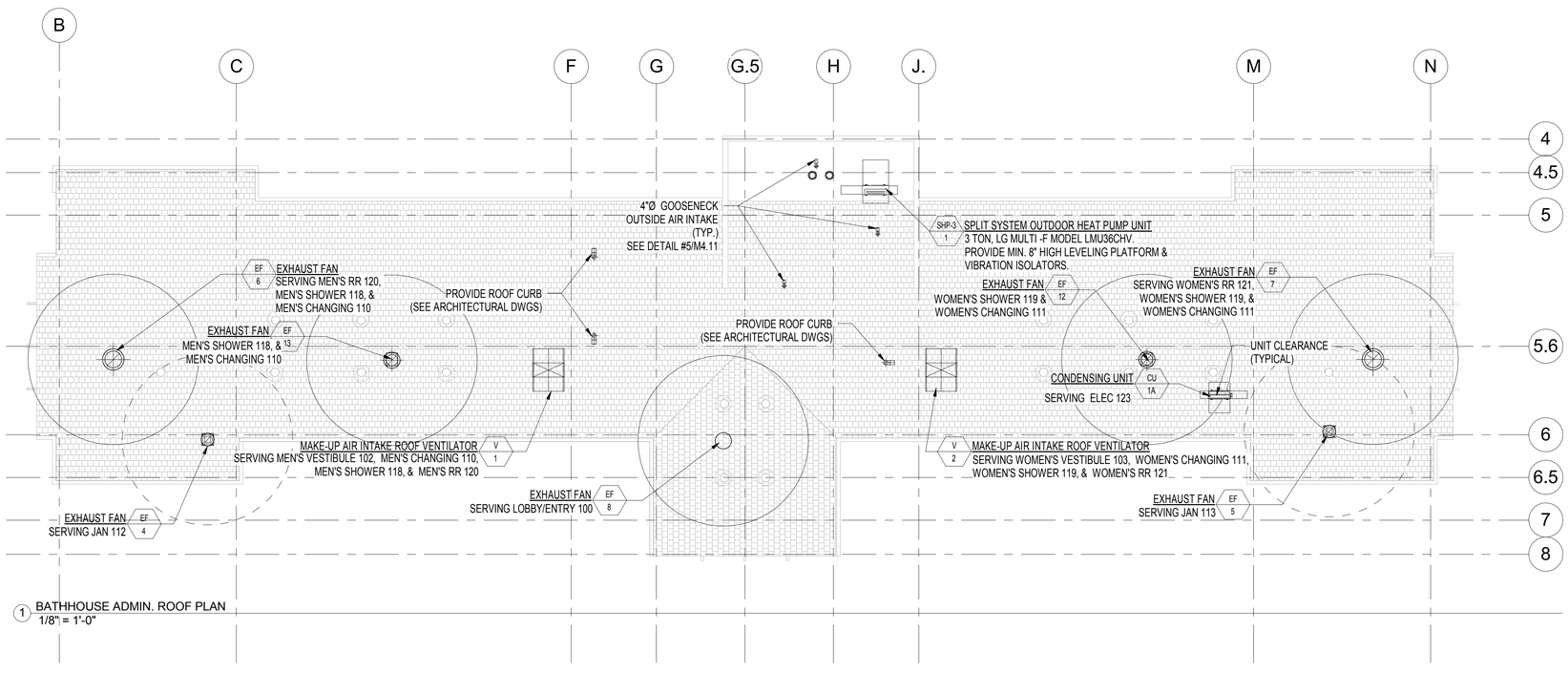

1 BATHHOUSE ADMIN. ROOF PLAN
1/8"= 1'-0"

N

BUREAU OF ENGINEERING
OFFICIAL RECORD

BUREAU OF ENGINEERING
ENGINEERING
CITY OF LOS ANGELES

NO.	REVISION DESCRIPTION	DATE	BY

BUILDING NO. -

INDEX NO. RP-300118

PUBLIC WORKS
CITY OF LOS ANGELES

DEPARTMENT OF PUBLIC WORKS
BUREAU OF ENGINEERING

GARY LEE MOORE, PE, ENV SP CITY ENGINEER

	DATE:
ARCHITECTURAL DIVISION	
ARCHITECT/ENGINEER: JOHN SPARANO LIC. NO.: LICENSE	7/3/2018
DESIGNED BY: MAROKO & SHWE, INC.	7/3/2018
DRAWN BY: N.W, S.N	7/3/2018
CHECKED BY: J.S	7/3/2018
APPROVED BY: Approver	7/3/2018

VERTICAL CONTROL:
HORIZONTAL CONTROL:

SHEET TITLE: HVAC ROOF PLANS

PROJECT: GRANADA HILLS POOL AND BATHHOUSE REPLACEMENT PROJECT

ADDRESS: 16730 CHATSWORTH STREET
GRANADA HILLS, CA 91344

BID SET
PROJECT ISSUE DATE: 06/22/21

WORK ORDER NO. #E170517

PLAN FILE NO.

DRAWING NO. M2.11

SHEET O F SHEETS

PLOTTED:1/10/2019 2:46:45 PM

REVISION DATES: (DESIGN STAGE ONLY)

THE CITY OF LOS ANGELES OR ITS OFFICERS OR AGENTS SHALL NOT BE RESPONSIBLE FOR THE ACCURACY OR COMPLETENESS OF ELECTRONIC COPIES OF THIS PLAN SHEET.

TTLB TEMPLATE REVISION DATE: 02/2013
SHEET ISSUE DATE: 01/30/18
FILE PATH: BIM 360://Granada Hills Pool Renovation/17019_Granada Hills Pool Renovation_HVAC Central_R17.rvt

LAG BOLT TO WOOD MEMBER

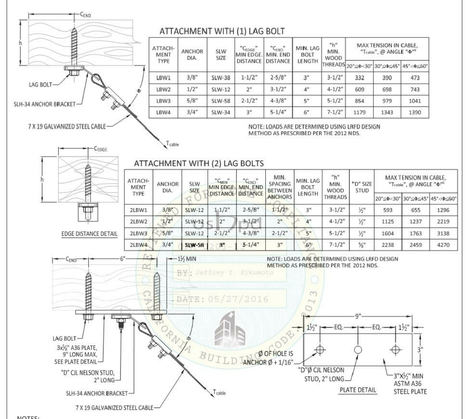

ATTACHMENT WITH (1) LAG BOLT

ATTACH-MENT TYPE	ANCHOR DIA.	SLW SIZE	"C_{min}" MIN EDGE DISTANCE	"C_{min}" MIN. END DISTANCE	MIN. LAG BOLT LENGTH	"h" MIN. WOOD THREADS	MAX TENSION IN CABLE, "T_{cable}", @ ANGLE "Φ"		
							20°≤Φ<30°	30°≤Φ≤45°	45°<Φ≤60°
LBW1	3/8"	SLW-38	1-1/2"	2-5/8"	3"	3-1/2"	332	390	473
LBW2	1/2"	SLW-12	2"	3-1/2"	4"	4-1/2"	609	698	743
LBW3	5/8"	SLW-58	2-1/2"	4-3/8"	5"	5-1/2"	864	979	1041
LBW4	3/4"	SLW-34	3"	5-1/4"	6"	7-1/2"	1179	1343	1390

NOTE: LOADS ARE DETERMINED USING LRFD DESIGN METHOD AS PRESCRIBED PER THE 2012 NDS.

ATTACHMENT WITH (2) LAG BOLTS

ATTACH-MENT TYPE	ANCHOR DIA.	SLW SIZE	"C_{min}" MIN EDGE DISTANCE	"C_{min}" MIN. END DISTANCE	MIN. SPACING BETWEEN ANCHORS	MIN. LAG BOLT LENGTH	"h" MIN. WOOD THREADS	"D" SIZE STUD	MAX TENSION IN CABLE, "T_{cable}", @ ANGLE "Φ"		
									20°≤Φ<30°	30°≤Φ≤45°	45°<Φ≤60°
2LBW1	3/8"	SLW-12	1-1/2"	2-5/8"	3-1/2"	3"	3-1/2"	½"	593	655	1296
2LBW2	1/2"	SLW-34	2"	3-1/2"	4"	4"	4-1/2"	½"	1125	1237	2219
2LBW3	5/8"	SLW-12	2-1/2"	4-3/8"	5"	2-1/2"	5-1/2"	½"	1604	1763	3138
2LBW4	3/4"	SLW-58	3"	5-1/4"	6"	3"	7-1/2"	½"	2238	2459	4270

NOTE: LOADS ARE DETERMINED USING LRFD DESIGN METHOD AS PRESCRIBED PER THE 2012 NDS.

NOTES:
1. LOADS FOR LAG BOLT ATTACHMENTS ARE DERIVED FROM CBC 2013 AND NDS 2012 FOR WOOD WITH A MINIMUM SPECIFIC GRAVITY = 0.50 (I.E. DOUGLAS FIR-LARCH OR EQUAL), MIN. CONSTRUCTION GRADE.
2. MINIMUM WOOD MEMBER SIZE TO MEET THE EDGE, END, AND DEPTH REQUIREMENTS AS SPECIFIED IN THE TABLES ABOVE.
3. STRUCTURAL ENGINEER OF RECORD SHALL VERIFY ADEQUACY OF THE STRUCTURE FOR THE TABULATED DESIGN LOAD CAPACITIES.
4. FASTENERS SHALL BE A307 BOLTS OR BETTER.
5. SEE PAGE 4.4 FOR SUH-34 DETAILS.
6. Φ = 90° – ANGLE "x" OF CABLE FROM SECTION 2 DETAILS. Φ MUST NOT BE LESS THAN 20° FOR CAPACITIES TO BE VALID.

Vibrex vibration & seismic control systems
M.W. Sausse & Co., Inc.
28744 Witherspoon Parkway | Valencia, CA 91355
Ph: (661) 257-3311 | Fax: (661) 257-6050
Civil Engineer: P.K. Sachdeva
California PE No. C59644
Page No.: 3.25
Date: May 9, 2016

05/27/2016 OPM-0203-13: Reviewed for Code Compliance by Jeffrey Kikumoto Page 165 of 211

LAG BOLT TO WOOD MEMBER DETAILS

SCALE NONE | 7

THRU-BOLT PERPENDICULAR TO WOOD MEMBER

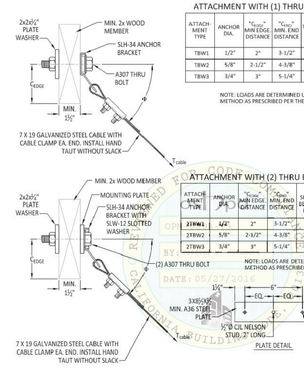

ATTACHMENT WITH (1) THRU BOLT

ATTACH-MENT TYPE	ANCHOR DIA.	"C_{min}" MIN EDGE DISTANCE	"C_{min}" MIN. END DISTANCE	TIGHTENING TORQUE	MAX TENSION IN CABLE, "T_{cable}", @ ANGLE "Φ"		
					20°≤Φ<30°	30°≤Φ≤45°	45°<Φ≤60°
TBW1	1/2"	2"	3-1/2"	40	756	618	569
TBW2	5/8"	2-1/2"	4-3/8"	79	879	717	661
TBW3	3/4"	3"	5-1/4"	141	1025	837	771

NOTE: LOADS ARE DETERMINED USING LRFD DESIGN METHOD AS PRESCRIBED PER THE 2012 NDS.

ATTACHMENT WITH (2) THRU BOLTS

ATTACH-MENT TYPE	ANCHOR DIA.	"C_{min}" MIN EDGE DISTANCE	"C_{min}" MIN. END DISTANCE	MIN. SPACING BETWEEN BOLTS	TIGHTENING TORQUE	MAX TENSION IN CABLE, "T_{cable}", @ ANGLE "Φ"		
						30°≤Φ<45°	45°≤Φ<60°	60°≤Φ≤70°
2THW1	1/2"	2"	3-1/2"	2"	40	1513	1236	1139
2THW2	5/8"	2-1/2"	4-3/8"	2-1/2"	79	1757	1436	1322
2THW3	3/4"	3"	5-1/4"	3"	141	2050	1674	1543

NOTES:
1. BOLT HOLES SHALL BE BORED 1/16" LARGER THAN THE NOMINAL BOLT DIAMETER.
2. LOADS FOR THRU-BOLT ATTACHMENTS ARE DERIVED FROM CBC 2013 AND NDS 2012 FOR WOOD WITH A MINIMUM SPECIFIC GRAVITY = 0.50 (I.E. DOUGLAS FIR-LARCH) AND GRADE NO.2.
3. MINIMUM BEAM SIZE TO MEET THE DIMENSIONAL REQUIREMENTS SHOWN IN THE FIGURES AND TABLES ABOVE.
4. STRUCTURAL ENGINEER OF RECORD SHALL VERIFY ADEQUACY OF THE STRUCTURE FOR THE TABULATED DESIGN LOAD CAPACITIES.
5. FASTENERS SHALL BE A307 BOLTS OR BETTER.
6. SEE PAGE 4.4 FOR SUH-34 DETAILS.
7. Φ = 90° – ANGLE OF CABLE "x" FROM SECTION 2 DETAILS. Φ MUST NOT BE EXCEED 70° FOR CAPACITIES TO BE VALID.

Vibrex vibration & seismic control systems
M.W. Sausse & Co., Inc.
28744 Witherspoon Parkway | Valencia, CA 91355
Ph: (661) 257-3311 | Fax: (661) 257-6050
Civil Engineer: P.K. Sachdeva
California PE No. C59644
Page No.: 3.26
Date: May 9, 2016

05/27/2016 OPM-0203-13: Reviewed for Code Compliance by Jeffrey Kikumoto Page 166 of 211

THRU-BOLT PERPENDICULAR TO WOOD MEMBER DETAILS

SCALE NONE | 8

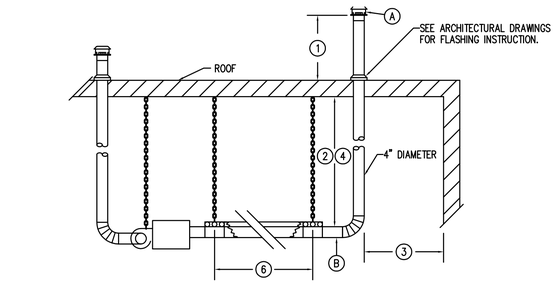

1. 2'-0" MINIMUM ABOVE OR BEYOND THE HIGHEST STRUCTURE OR SURFACE WITHIN 10' OF THE VENT. PAY PARTICULAR ATTENTION TO SLOPED ROOF & THOSE WITH PARAPETS.
2. 15" MINIMUM.
3. 12" MINIMUM.
4. COMBUSTION AIR OR VENT PIPE SHALL BE PROVIDED & MUST NOT EXCEED AN EQUIVALENT OF 35 LINEAR FEET FOR 40 TO 125 MBTUH OR 40 LINEAR FEET FOR 130 TO 200 MBTUH. NO MORE THAN TWO 90° ELBOWS MAY BE USED. A 90° ELBOW IS EQUIVALENT TO 10 LINEAR FEET.
5. 20' OF RADIANT TUBE.
6. 10' TO 70' OF RADIANT TUBE.
7. A DILUTER IS FACTORY SUPPLIED INCREASING THE VENT SIZE FROM 4" TO 5". THE DILUTER IS 12" LONG.
- A. 4" ID VENT CAP FOR ROOF EXHAUST.
- B. 4" ID VENT PIPE CONNECTOR FOR SINGLE WALL PIPE–12" LONG. 4" ID VENT PIPE CONNECTOR FOR DOUBLE WALL PIPE–12" LONG.

INFRA RED HEATER OUTDOOR VENT THRU ROOF

SCALE NONE | 4

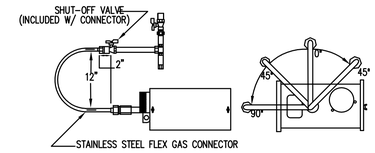

GAS PIPE WORK MUST BE INSTALLED AND TESTED IN ACCORDANCE WITH UNITED STATES ANSIZ223.1/NFPA54 LATEST ADDITION and CANADA–CNA/CSA–B149.1 AND B149.2
A) INSTALL THE FLEX GAS CONNECTOR AS SHOWN. THE FLEX GAS CONNECTOR ACCOMMODATES EXPANSION OF THE HEATING SYSTEM AND ALLOWS FOR EASY INSTALLATION AND SERVICE OF THE BURNER.
B) SHUT–OFF VALVE MUST BE PARALLEL TO BURNER INLET. THE 2" (5CM) DISPLACEMENT SHOWN IS FOR THE COLD CONDITION. THIS DISPLACEMENT MAY REDUCE WHEN THE SYSTEM IS FIRED.

BUREAU OF ENGINEERING OFFICIAL RECORD

GAS CONNECTION

SCALE NONE | 1

TYPICAL TOILET EXHAUST FAN INSTALLATION (TTEFI)

SCALE NONE | 5

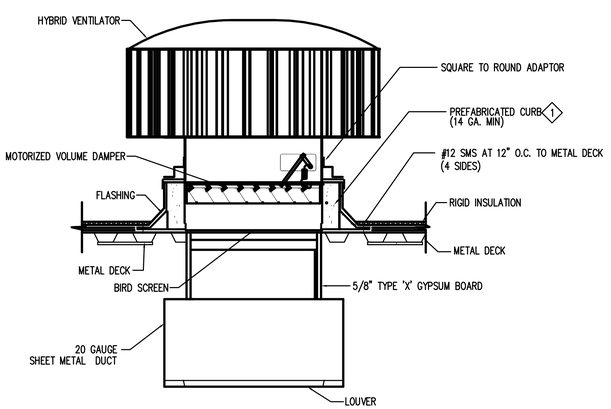

METAL DECK W/RIGID INSULATION

NOTE:
- SEE ARCH. DWG. FOR FLASHING & COUNTERFLASHING DETAILS

1 CONTRACTOR IS RESPONSIBLE TO FIELD MEASURE THE ROOF SLOPE AND ORDER THE TAPERED PITCHED CURB FROM MANUFACTURER.

HYBRID ROOF VENTILATOR (EDMONDS FAN) EF–6 TO EF–8

SCALE NONE | 6

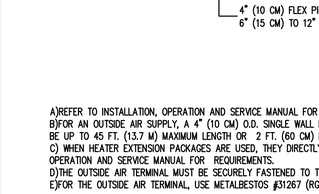

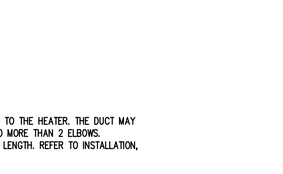

A)REFER TO INSTALLATION, OPERATION AND SERVICE MANUAL FOR PROPER DESIGN.
B)FOR AN OUTSIDE AIR SUPPLY, A 4" (10 CM) O.D. SINGLE WALL PIPE MUST BE ATTACHED TO THE HEATER. THE DUCT MAY BE UP TO 45 FT. (13.7 M) MAXIMUM LENGTH OR 2 FT. (60 CM) MINIMUM LENGTH WITH NO MORE THAN 2 ELBOWS.
C) WHEN HEATER EXTENSION PACKAGES ARE USED, THEY DIRECTLY EFFECT MAXIMUM VENT LENGTH. REFER TO INSTALLATION, OPERATION AND SERVICE MANUAL FOR REQUIREMENTS.
D)THE OUTSIDE AIR TERMINAL MUST BE SECURELY FASTENED TO THE OUTSIDE WALL.
E)FOR THE OUTSIDE AIR TERMINAL, USE METALBESTOS #31267 (RG P/N 90502300), OR ACME#104, OR EQUIVALENT.

OUTSIDE COMBUSTION AIR SUPPLY

SCALE NONE | 2

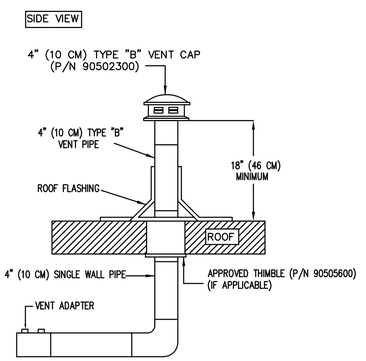

A) REFER TO INSTALLATION, OPERATION AND SERVICE MANUAL FOR PROPER DESIGN.
B) TYPE "B" VENT MATERIALS MUST BE USED OUTDOORS.
C) AN INSULATING THIMBLE (P/N 90505600) IS REQUIRED TO PASS THROUGH COMBUSTIBLE STRUCTURES.
D) 4" (10 CM) O.D. VENT PIPE, MAXIMUM 45 FT.(13.7M) IN LENGTH MAY BE USED AS SHOWN ABOVE WITH AN APPROVED VENT CAP (P/N 90502300).NOTE: CONDENSATE MAY DEVELOP WHEN LONG VENT PIPES ARE USED. IT IS RECOMMENDED THAT THE PIPE LENGTH SHOULD BE LESS THAN 20' (6M).
E)WHEN HEATER EXTENSION PACKAGES ARE USED, THEY DIRECTLY EFFECT MAXIMUM VENT LENGTH. REFER TO INSTALLATION, OPERATION AND SERVICE MANUAL FOR REQUIREMENTS.

VERTICAL VENTING

SCALE NONE | 3

ENGINEERING CITY OF LOS ANGELES

BUREAU OF ENGINEERING

NO.	REVISION DESCRIPTION	DATE	BY

BUILDING NO. –

INDEX NO. RP-300118

PROFESSIONAL ENGINEER JAMES H. SHINE No. 26903 (Revised: 9/30/20) MECHANICAL STATE OF CALIFORNIA

PUBLIC WORKS DEPARTMENT OF ENGINEERING CITY OF LOS ANGELES

GARY LEE MOORE, PE, ENV SP CITY ENGINEER

ARCHITECTURAL DIVISION

ARCHITECT: JOHN SPARANO LIC. NO.:

DESIGNED BY: MARCKO & SHWE, INC.

DRAWN BY: N.W. S.N

CHECKED BY: J.S

APPROVED BY:

CITY ENGINEER DATE:

VERTICAL CONTROL:

HORIZONTAL CONTROL:

SHEET TITLE: DETAILS

PROJECT: GRANADA HILLS POOL AND BATHHOUSE REPLACEMENT PROJECT

ADDRESS: 16730 CHATSWORTH STREET GRANADA HILLS, CA 91344

BID SET
PROJECT ISSUE DATE:06/22/21

WORK ORDER NO. #E170517

PLAN FILE NO.

DRAWING NO. M4.10

SHEET - OF SHEETS -

PLOTTED: 11/30/2018 3:16:43 PM

THE CITY OF LOS ANGELES OR ITS OFFICERS OR AGENTS SHALL NOT BE RESPONSIBLE FOR THE ACCURACY OR COMPLETENESS OF ELECTRONIC COPIES OF THIS PLAN SHEET.

FILE PATH: V:\170109.00 Granada Hills Pool Renovation\Hvac\M4.10.dwg

SHEET ISSUE DATE: 03 JULY 2018

REVISION DATES (DESIGN STAGE ONLY)

Boilerplate 08 Revised for Publication 150dpi.dot

NOTE:

- SEE ARCH. DWG. FOR FLASHING & COUNTERFLASHING DETAILS

1 CONTRACTOR IS RESPONSIBLE TO FIELD MEASURE THE ROOF SLOPE AND ORDER THE TAPERED PITCHED CURB FROM MANUFACTURE.

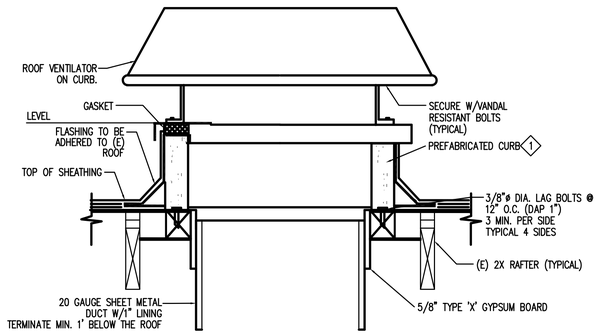

GRAVITY VENT DETAIL FOR V-1 & V-2

SCALE NONE | 5

NOTE:

- SEE ARCH. DWG. FOR FLASHING & COUNTERFLASHING DETAILS

1 CONTRACTOR IS RESPONSIBLE TO FIELD MEASURE THE ROOF SLOPE AND ORDER THE TAPERED PITCHED CURB FROM MANUFACTURE.

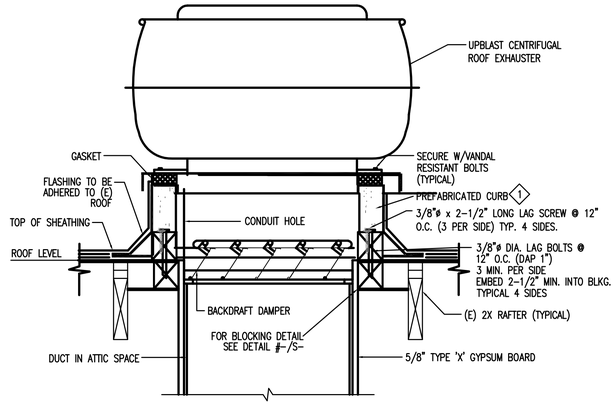

ROOF EXHAUSTER ON WOOD FRAME ROOF

SCALE NONE | 3

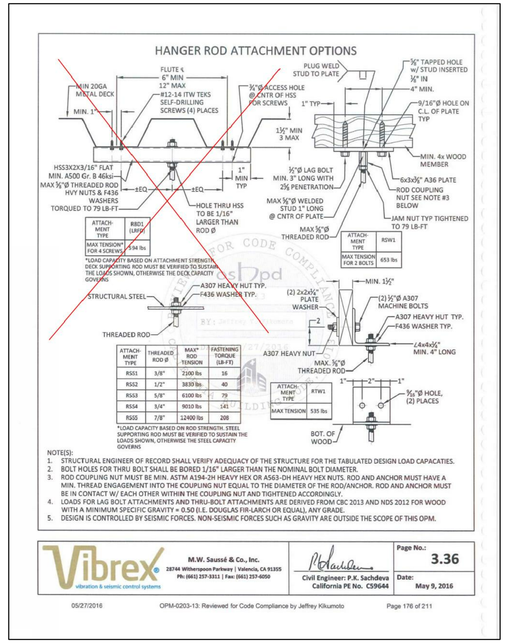

BUREAU OF ENGINEERING OFFICIAL RECORD

HANGER ROD ATTACHMENT DETAIL

SCALE NONE | 1

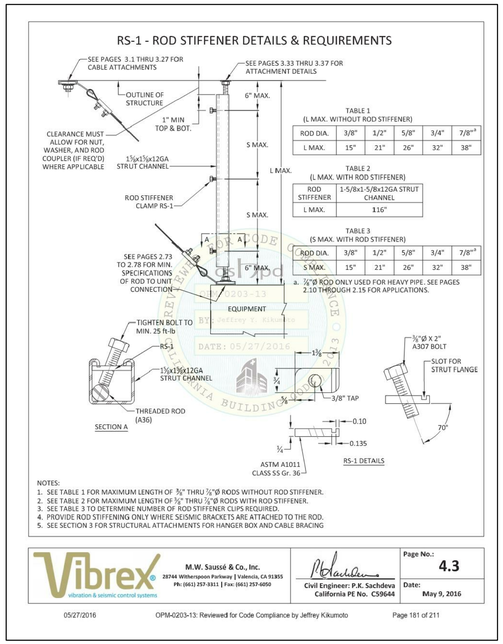

ROD STIFFENER DETAILS

SCALE NONE | 2

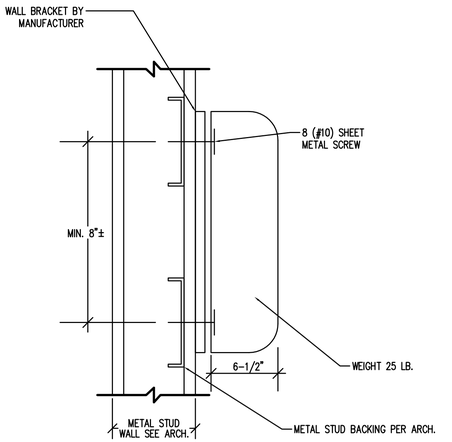

WALL MOUNTING DETAIL FOR DUCTLESS FAN COIL UNIT

SCALE NONE | 6

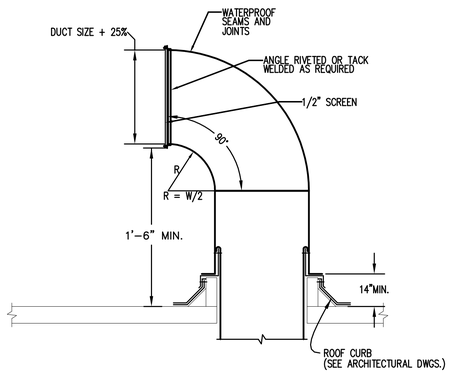

ROUND GOOSENECK

SCALE NONE | 4

THE CITY OF LOS ANGELES OR ITS OFFICERS OR AGENTS SHALL NOT BE RESPONSIBLE FOR THE ACCURACY OR COMPLETENESS OF ELECTRONIC COPIES OF THIS PLAN SHEET.

FILE PATH: V:\17019.00 Granada Hills Pool Renovation\Hvac\M4.11.dwg

SHEET ISSUE DATE: 03 JULY 2018

REVISION DATES (DESIGN STAGE ONLY)

ENGINEERING — CITY OF LOS ANGELES

BUREAU OF ENGINEERING

NO.	REVISION DESCRIPTION	DATE	BY

BUILDING NO. -

INDEX NO. RP-300118

PROFESSIONAL ENGINEER — JAMES H. SHIH — No. 26903 — (Revised: 9/30/20) — MECHANICAL — STATE OF CALIFORNIA

DEPARTMENT OF PUBLIC WORKS — CITY OF LOS ANGELES

CITY ENGINEER
DATE:
LIC. NO.:

GARY LEE MOORE, PE, ENV SP
ARCHITECTURAL DIVISION

ARCHITECT: JOHN SPARANO
DESIGNED BY: MAROKO & SHWE, INC.
DRAWN BY: N.W. S.N
CHECKED BY: J.S
APPROVED BY:

VERTICAL CONTROL:
HORIZONTAL CONTROL:

SHEET TITLE: DETAILS

PROJECT: GRANADA HILLS POOL AND BATHHOUSE REPLACEMENT PROJECT
ADDRESS: 16730 CHATSWORTH STREET GRANADA HILLS, CA 91344

BID SET
PROJECT ISSUE DATE:06/22/21.
CITY OF LOS ANGELES

WORK ORDER NO. #E170517
PLAN FILE NO.
DRAWING NO. M4.11
SHEET - OF - SHEETS

PLOTTED: 11/30/2018 3:17:23 PM

© 2018 Maroko and Shwe Inc. All Rights Reserved

M. W. SAUSSE & CO., INC.
28774 Whitherspoon Pkwy. Valencia, CA 91355
Phone: (661) 257-3311 Fax: (661) 257-7673

Vibrex vibration & seismic control systems

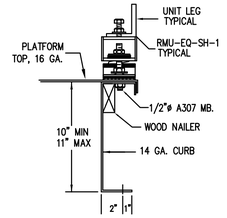

SECTION A

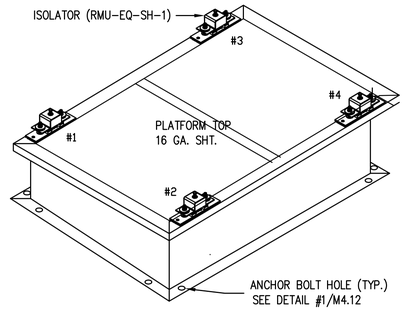

NOTES:

1. G & H DIMENSIONS ARE CENTERLINES OF ANCHOR HOLES IN CURB BOTTOM FLANGE.
2. SEE STRUCTURAL DETAIL FOR ANCHORAGE OF PREFABRICATED CURB TO ROOF DECK.

SPLIT CONDENSING UNIT & HEAT PUMP ROOF CURB DETAIL

SCALE NONE 3

NOTES:

1) #1 THRU #4 INDICATE ISOLATOR LOCATIONS. SEE DETAIL #7/M8002.

MARK	MAKE	MODEL
CU-1/A	LG	LSU120HSV5
SHP-3/1	LG	LMU36CHV

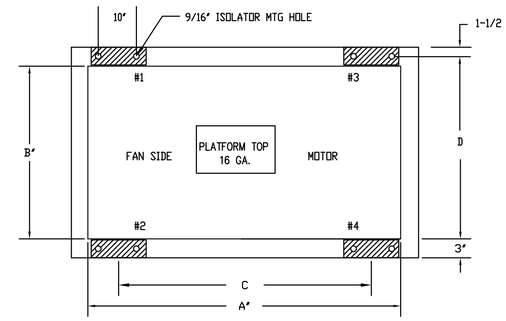

TOP LAYOUT

MARK	A	B	C	D	E	F	G	H
	33	19	20-11/16	22	25	39	23	37

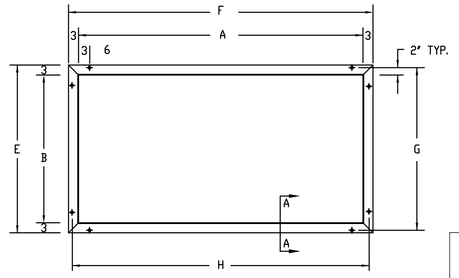

FOOTPRINT

NOTES:

1. G & H DIMENSIONS ARE CENTERLINES OF ANCHOR HOLES IN CURB BOTTOM FLANGE.

SPLIT CONDENSING UNIT & HEAT PUMP ROOF CURB DIMENSIONS

SCALE NONE 1

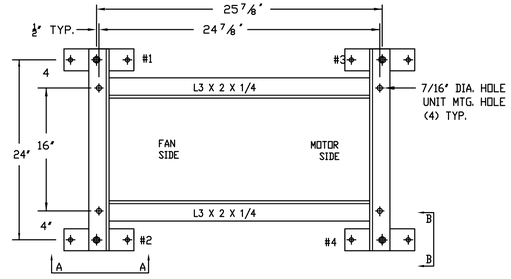

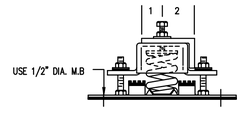

VIEW A-A

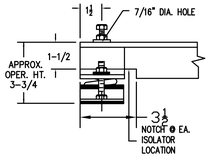

VIEW B-B

NOTES:

1. APPROX. STEEL WEIGHT INCLUDING ISOLATORS.: 65 lbs.

SPLIT CONDENSING UNIT & HEAT PUMP BASE RAIL & ISOLATOR DETAIL

SCALE NONE 2

(NOT USED)

(NOT USED)

SCALE NONE 5

SCALE NONE 4

BUREAU OF ENGINEERING
OFFICIAL RECORD

DEPARTMENT OF PUBLIC WORKS
CITY OF LOS ANGELES

BUREAU OF ENGINEERING
ENGINEERING
CITY OF LOS ANGELES

NO.	REVISION DESCRIPTION	DATE	BY

BUILDING NO. -

INDEX NO. RP-300118

REGISTERED PROFESSIONAL ENGINEER JAMES H. SHWE No. 26903 Renewal: 9/30/20 MECHANICAL STATE OF CALIFORNIA

GARY LEE MOORE, PE, ENV SP
CITY ENGINEER
DATE:
ARCHITECTURAL DIVISION
ARCHITECT: JOHN SPARANO LIC. NO.:
DESIGNED BY: MAROKO & SHWE, INC.
DRAWN BY: N.W, S.N
CHECKED BY: J.S
APPROVED BY:

VERTICAL CONTROL:
HORIZONTAL CONTROL:
SHEET TITLE: DETAILS
PROJECT: GRANADA HILLS POOL AND BATHHOUSE REPLACEMENT PROJECT
ADDRESS: 16730 CHATSWORTH STREET GRANADA HILLS, CA 91344

WORK ORDER NO. #E170517
PLAN FILE NO.
DRAWING NO. M4.12
SHEET - OF SHEETS -

BID SET
PROJECT ISSUE DATE: 06/22/21

PLOTTED: 11/30/2018 3:17:57 PM

THE CITY OF LOS ANGELES OR ITS OFFICERS OR AGENTS SHALL NOT BE RESPONSIBLE FOR THE ACCURACY OR COMPLETENESS OF ELECTRONIC COPIES OF THIS PLAN SHEET.

SHEET ISSUE DATE: 03 JULY 2018 FILE PATH: V:\17019.00 Granada Hills Pool Renovation\Hvac\M4.12.dwg

REVISION DATES (DESIGN STAGE ONLY)

SEQUENCE OF OPERATION

FUNCTION	INPUT	CONDITION	ACTION	REMARK
ENABLE	EMS			
ON	EMS	OWNER SCHEDULE OR MANUAL OVERRIDE	ON	
OFF	EMS	OWNER SCHEDULE OR MANUAL OVERRIDE	OFF	
COOLING	SPACE AIR TEMP. SENSOR	IF SPACE AIR TEMP. > SET PT (75'F DEFAULT),	SUPPLY FAN ON, ENABLE COMPRESSOR AND CONDENSER TO MODULATE AND CYCLE ON AND OFF	
HEATING	SPACE AIR TEMP. SENSOR	IF SPACE AIR TEMP. < SET PT (72'F DEFAULT)	SUPPLY FAN ON, ENABLE COMPRESSOR AND CONDENSER TO MODULATE AND CYCLE ON AND OFF	
SAFETY	EMS	INOPERATION OF ANY FAN OR COMPRESSOR, LOW EVAPORATOR PRESSURE, HIGH CONDENSER PRESSURE, FREEZESTAT, HIGH CONDENSATE LEVEL SWITCH	SHUT DOWN AND ALARM	
MAINTENANCE	EMS	CLOGGED FILTER	ALARM	
		MANUFACTURER REQUIRED OR RECOMMENDED ALARMS	ALARM	
		MANUFACTURER RECOMMENDED SCHEDULE	REMIND MAINTENANCE PERSON & RECORD COMPLETION.	

NOTES:

* SUFFICIENT TIME DELAY SHALL BE PROVIDED BETWEEN EACH CONTROL STEP TO PREVENT RAPID CYCLING OF EQUIPMENT.

SEQUENCE OF OPERATION — SCALE NONE — 3

KEY NOTES:

1. UNIT CONTROLLER IS POWERED THRU UNIT.
2. PROVIDE ALL SAFETY CONTROLS REQUIRED PER CMC & CAC TITLE 24 CURRENT EDITIONS

GENERAL NOTES:

- SEE CONTROL LEGEND AND SPECIFICATIONS FOR PROPOSED DISTRIBUTION OF WORK BETWEEN TRADES. FINAL DETERMINATION BY CONTRACTOR.
- LINE VOLTAGE WIRING, CONDUIT & DEVICES TO BE PROVIDED UNDER DIVISION 16.
- LOW VOLTAGE (LESS THAN 50 VOLTS) WIRING, CONDUIT & DEVICES TO BE PROVIDED UNDER DIVISION 23.

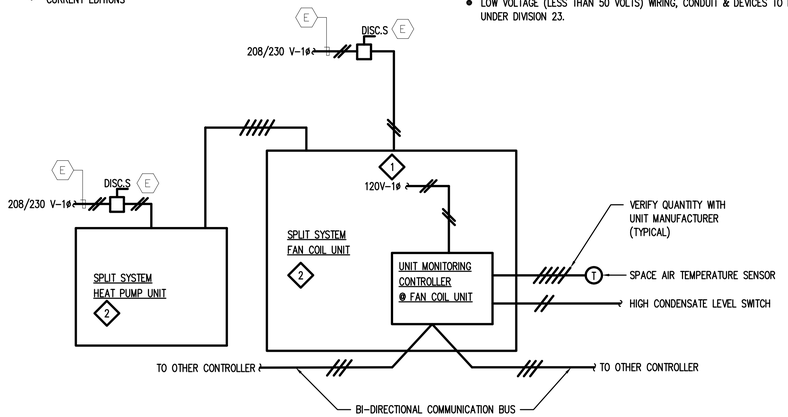

CONTROLS AND POWER WIRING SCHEMATIC — SCALE NONE — 2

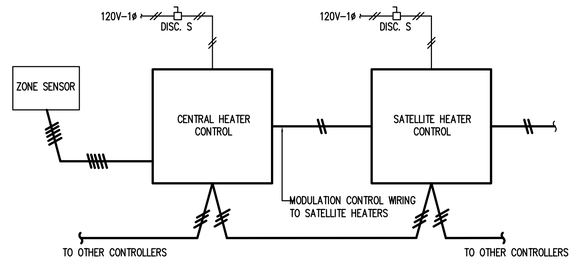

GAS INFRA-RED RADIANT HEATER CONTROLS — SCALE NONE — 4

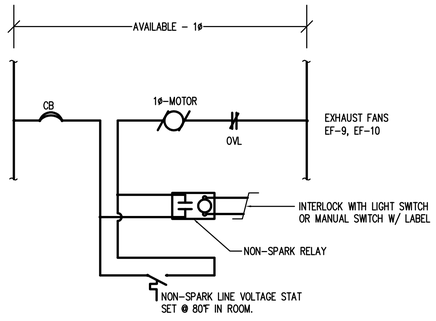

EXHAUST FAN CONTROL FOR EF-9, EF-10 — SCALE NONE — 5

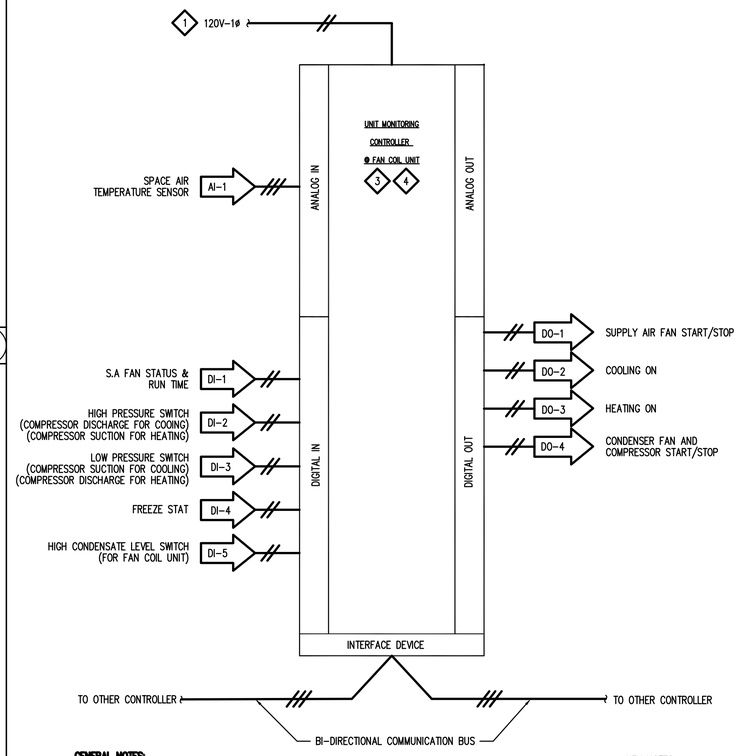

GENERAL NOTES:

- SEE CONTROL LEGEND AND SPECIFICATIONS FOR PROPOSED DISTRIBUTION OF WORK BETWEEN TRADES. FINAL DETERMINATION BY CONTRACTOR.
- LINE VOLTAGE WIRING, CONDUIT & DEVICES TO BE PROVIDED UNDER DIVISION 16.
- LOW VOLTAGE (LESS THAN 50 VOLTS) WIRING, CONDUIT & DEVICES TO BE PROVIDED UNDER DIVISION 23.

KEY NOTES:

1. UNIT CONTROLLER IS POWERED THRU UNIT.
2. POWER TO THE DEVICE SHALL BE PROVIDED BY CONTROL CONTRACTOR.
3. PROVIDE ALL SAFETY CONTROLS REQUIRED PER CMC & CAC TITLE 24 CURRENT EDITIONS.
4. THE POINTS AND FUNCTIONS IN THIS DIAGRAM ARE PROVIDED AS A REFERENCE ONLY. POINTS AND FUNCTIONS PROVIDED BY THE MANUFACTURER ON FACTORY INSTALLED CONTROLLERS AS A STANDARD WILL BE CONSIDERED SUFFICIENT. PROGRAMMABLE CONTROLLER CAPABLE OF STAND ALONE OPERATION WITH MANUFACTURER'S STANDARD SEQUENCE. INPUT DEVICE SHALL BE INTERFACED WITH EMS FOR OP/START/STOP REMOTE SET POINT CONTROLS ALARM PROCESSING AND SERVICE SCHEDULING.

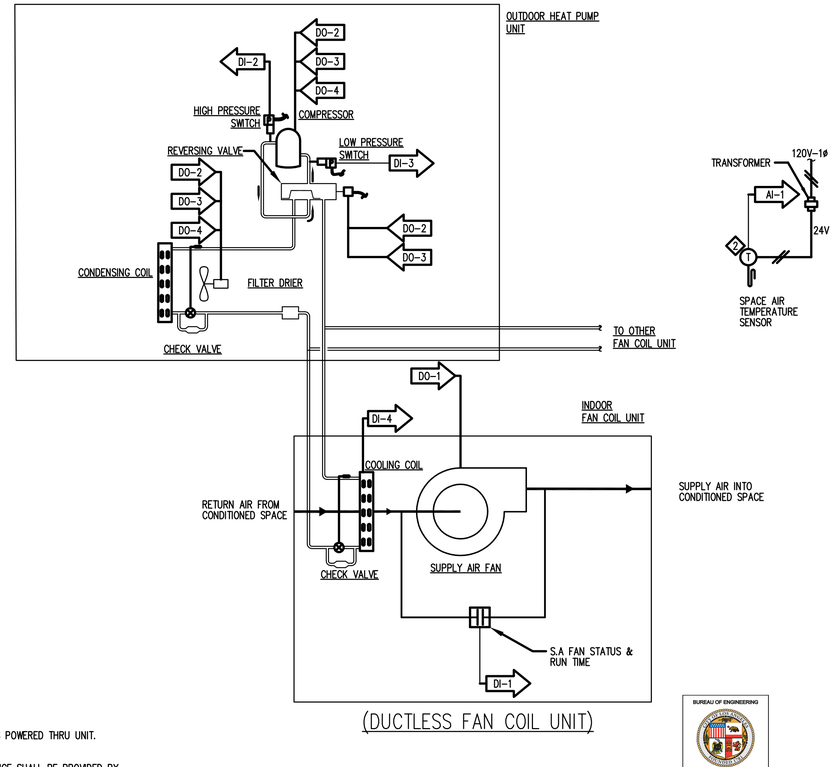

(DUCTLESS FAN COIL UNIT)

CONTROLS AND INSTRUMENTATION FOR SPLIT SYSTEM FAN COIL UNIT W/ HEAT PUMP UNIT — SCALE NONE — 1

BUREAU OF ENGINEERING — OFFICIAL RECORD

ENGINEERING — CITY OF LOS ANGELES

DEPARTMENT OF PUBLIC WORKS — BUREAU OF ENGINEERING

NO.	DATE	REVISION DESCRIPTION	BY

BUILDING NO. -

INDEX NO. RP-300118

REGISTERED PROFESSIONAL ENGINEER — JAMES H. SHIRE — No. 26903 — (Revised: 9/30/20) — MECHANICAL — STATE OF CALIFORNIA

CITY ENGINEER — DATE:

LIC. NO.:

ARCHITECT:	JOHN SPARANO
DESIGNED BY:	MAROKO & SHWE, INC.
DRAWN BY:	N.W. S.N
CHECKED BY:	J.S
APPROVED BY:	

GARY LEE MOORE, PE, ENV SP
ARCHITECTURAL DIVISION

VERTICAL CONTROL:
HORIZONTAL CONTROL:

SHEET TITLE: CONTROLS

PROJECT: GRANADA HILLS POOL AND BATHHOUSE REPLACEMENT PROJECT

ADDRESS: 16730 CHATSWORTH STREET GRANADA HILLS, CA 91344

BID SET
PROJECT ISSUE DATE:06/22/21

CITY OF LOS ANGELES

WORK ORDER NO. #E170517

PLAN FILE NO.

DRAWING NO. M5.10

SHEET - OF SHEETS -

PLOTTED:11/30/2018 3:18:37 PM

THE CITY OF LOS ANGELES OR ITS OFFICERS OR AGENTS SHALL NOT BE RESPONSIBLE FOR THE ACCURACY OR COMPLETENESS OF ELECTRONIC COPIES OF THIS PLAN SHEET.

FILE PATH: V:\17019.00 Granada Hills Pool Renovation\Hvac\M5.10.dwg

SHEET ISSUE DATE: 03 JULY 2018

REVISION DATES (DESIGN STAGE ONLY)

(NOT USED)

–

SCALE NONE 5

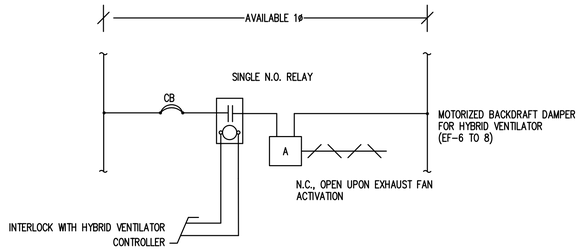

MOTORIZED BACKDRAFT DAMPER CONTROL WIRING DIAGRAM

SCALE NONE 3

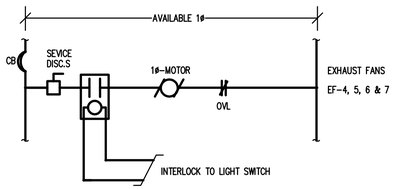

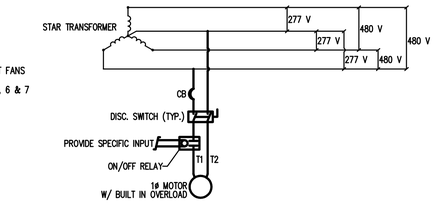

TYPICAL 1ø MOTOR CONTROL DIAGRAM

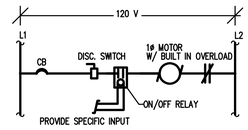

TYPICAL 1ø MOTOR CONTROL LADDER DIAGRAM

NOTES:

- SEE CONTROL LEGEND FOR DISTRIBUTION OF WORK BETWEEN TRADES.
- LABEL ALL OUTPUTS.
- WITH BATTERY BACKUP, HOLIDAY PROGRAMMING & AUTO CHANGEOVER FOR DAYLIGHT SAVING
- LINE VOLTAGE WIRING, CONDUIT & DEVICES TO BE PROVIDED UNDER DIVISION 26.
- LOW VOLTAGE (LESS THAN 50 VOLTS) WIRING, CONDUIT & DEVICES TO BE PROVIDED UNDER DIVISION 23.

TYPICAL FAN MOTOR CONTROLS FOR EF-4, EF-5, & EF-11

SCALE NONE 1

(NOT USED)

–

SCALE NONE 6

(NOT USED)

–

SCALE NONE 4

NOTES:

- SEE CONTROL LEGEND FOR DISTRIBUTION OF WORK BETWEEN TRADES.
- LABEL ALL OUTPUTS.
- WITH BATTERY BACKUP, HOLIDAY PROGRAMMING & AUTO CHANGEOVER FOR DAYLIGHT SAVING
- LINE VOLTAGE WIRING, CONDUIT & DEVICES TO BE PROVIDED UNDER DIVISION 16.
- LOW VOLTAGE (LESS THAN 50 VOLTS) WIRING, CONDUIT & DEVICES TO BE PROVIDED UNDER DIVISION 26.

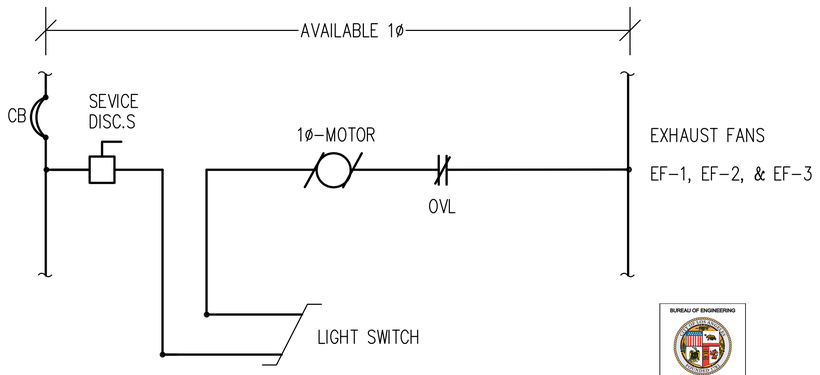

TYPICAL FAN MOTOR CONTROLS FOR EF-1, EF-2, & EF-3

SCALE NONE 2

BID SET
PROJECT ISSUE DATE:06/22/21

CITY OF LOS ANGELES

DEPARTMENT OF PUBLIC WORKS

BUREAU OF ENGINEERING

ENGINEERING
CITY OF LOS ANGELES

NO.	REVISION DESCRIPTION	DATE	BY

BUILDING NO. –

INDEX NO. RP-300118

REGISTERED PROFESSIONAL ENGINEER JAMES H. SHWE No. 26903 Renewal: 9/30/20 MECHANICAL STATE OF CALIFORNIA

GARY LEE MOORE, PE, ENV SP
ARCHITECTURAL DIVISION
CITY ENGINEER
DATE:
ARCHITECT: JOHN SPARANO LIC. NO.:
DESIGNED BY: MAROKO & SHWE, INC.
DRAWN BY: N.W, S.N
CHECKED BY: J.S
APPROVED BY:

VERTICAL CONTROL:
HORIZONTAL CONTROL:
SHEET TITLE: CONTROLS
PROJECT: GRANADA HILLS POOL AND BATHHOUSE REPLACEMENT PROJECT
ADDRESS: 16730 CHATSWORTH STREET GRANADA HILLS, CA 91344

WORK ORDER NO. #E170517
PLAN FILE NO.
DRAWING NO. M5.11
SHEET - OF - SHEETS

PLOTTED: 11/30/2018 3:19:04 PM

THE CITY OF LOS ANGELES OR ITS OFFICERS OR AGENTS SHALL NOT BE RESPONSIBLE FOR THE ACCURACY OR COMPLETENESS OF ELECTRONIC COPIES OF THIS PLAN SHEET.

SHEET ISSUE DATE: 03 JULY 2018 FILE PATH: V:\17019.00 Granada Hills Pool Renovation\Hvac\M5.11.dwg

REVISION DATES (DESIGN STAGE ONLY)

SEQUENCE OF OPERATION

FUNCTION	INPUT	CONDITION	ACTION	REMARK
ENABLE	EMS			
ON	EMS	OWNER SCHEDULE OR BY MANUAL OVERRIDE	ON	
OFF	EMS	OWNER SCHEDULE OR BY MANUAL OVERRIDE	OFF	
COOLING	SPACE AIR TEMP. SENSOR	IF SPACE AIR TEMP. > SET PT (75F DEFAULT),	SUPPLY FAN ON, ENABLE COMPRESSOR AND CONDENSER TO MODULATE AND CYCLE ON AND OFF	
SAFETY	EMS	INOPERATION OF ANY FAN OR COMPRESSOR, LOW EVAPORATOR PRESSURE, HIGH CONDENSER PRESSURE, FREEZESTAT, HIGH CONDENSATE LEVEL SWITCH	SHUT DOWN AND ALARM	
MAINTENANCE	EMS	CLOGGED FILTER	ALARM	
		MANUFACTURER REQUIRED OR RECOMMENDED ALARMS	ALARM	
		MANUFACTURER RECOMMENDED SCHEDULE	REMIND MAINTENANCE PERSON & RECORD COMPLETION.	

NOTES:
* SUFFICIENT TIME DELAY SHALL BE PROVIDED BETWEEN EACH CONTROL STEP TO PREVENT RAPID CYCLING OF EQUIPMENT.

SEQUENCE OF OPERATION | SCALE NONE | 3

KEY NOTES:

1. DEDICATED POWER UNDER DIVISION 16, MAYBE POWERED THRU UNIT IF POSSIBLE.
2. PROVIDE ALL SAFETY CONTROLS REQUIRED PER CMC & CAC TITLE 24 CURRENT EDITIONS

GENERAL NOTES:

- SEE CONTROL LEGEND AND SPECIFICATIONS FOR PROPOSED DISTRIBUTION OF WORK BETWEEN TRADES. FINAL DETERMINATION BY CONTRACTOR.
- LINE VOLTAGE WIRING, CONDUIT, & DEVICES TO BE PROVIDED UNDER DIVISION 26.
- LOW VOLTAGE (LESS THAN 50 VOLTS) WIRING, CONDUIT & DEVICES TO BE PROVIDED UNDER DIVISION 23.

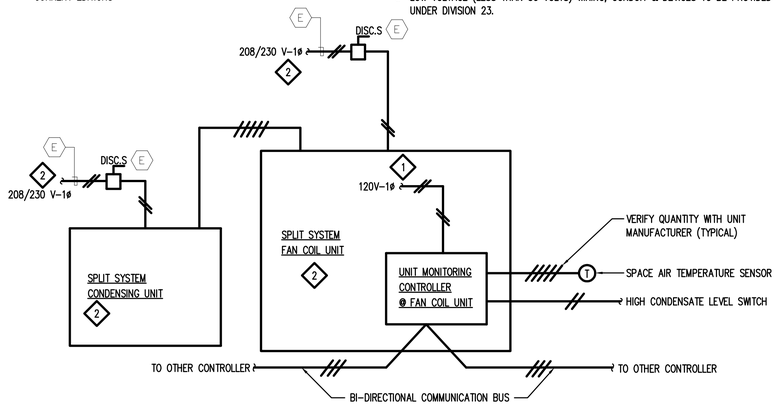

CONTROLS AND POWER WIRING SCHEMATIC | SCALE NONE | 2

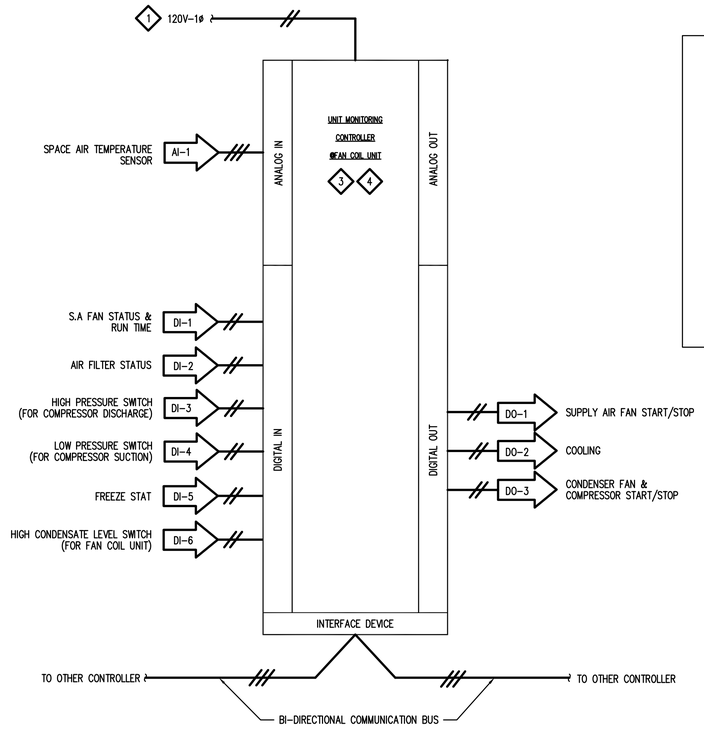

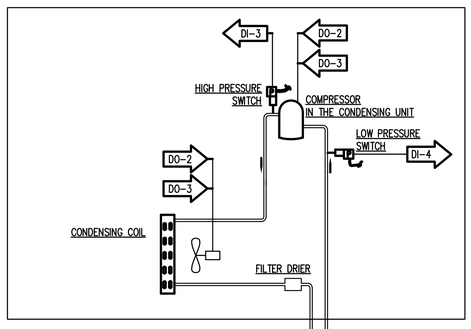

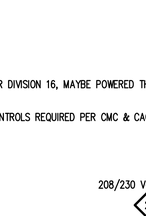

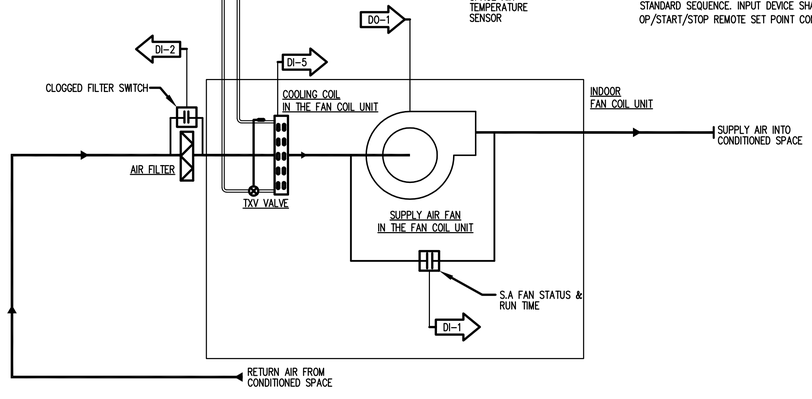

GENERAL NOTES:

- SEE CONTROL LEGEND AND SPECIFICATIONS FOR PROPOSED DISTRIBUTION OF WORK BETWEEN TRADES. FINAL DETERMINATION BY CONTRACTOR.
- LINE VOLTAGE WIRING, CONDUIT, & DEVICES TO BE PROVIDED UNDER DIVISION 26.
- LOW VOLTAGE (LESS THAN 50 VOLTS) WIRING, CONDUIT & DEVICES TO BE PROVIDED UNDER DIVISION 26.

KEY NOTES:

1. DEDICATED POWER UNDER DIVISION 26, MAYBE POWERED THRU UNIT IF POSSIBLE.
2. POWER TO THE DEVICE SHALL BE PROVIDED BY CONTROL CONTRACTOR.
3. PROVIDE ALL SAFETY CONTROLS REQUIRED PER CMC & CAC TITLE 24 CURRENT EDITIONS
4. THE POINTS AND FUNCTIONS IN THIS DIAGRAM ARE PROVIDED AS A REFERENCE ONLY. POINTS AND FUNCTIONS PROVIDED BY THE MANUFACTURER ON FACTORY INSTALLED CONTROLLERS AS A STANDARD WILL BE CONSIDERED SUFFICIENT. PROGRAMMABLE CONTROLLER CAPABLE OF STAND ALONE OPERATION WITH MANUFACTURER'S STANDARD SEQUENCE. INPUT DEVICE SHALL BE INTERFACED WITH EMS FOR OP/START/STOP REMOTE SET POINT CONTROLS ALARM PROCESSING AND SERVICE SCHEDULING.

CONTROLS AND INSTRUMENTATION FOR SPLIT SYSTEM FAN COIL UNIT W/ COOLING ONLY CONDENSING UNIT (FC-1A) | SCALE NONE | 1

BUREAU OF ENGINEERING
OFFICIAL RECORD

ENGINEERING
CITY OF LOS ANGELES

NO.	REVISION DESCRIPTION	DATE	BY

BUILDING NO. -

INDEX NO. RP-300118

REGISTERED PROFESSIONAL ENGINEER JAMES H. SHIRE No. 26903 (Revised: 9/30/20) MECHANICAL STATE OF CALIFORNIA

DEPARTMENT OF PUBLIC WORKS
BUREAU OF ENGINEERING
CITY OF LOS ANGELES

GARY LEE MOORE, PE, ENV SP — CITY ENGINEER — DATE:
ARCHITECTURAL DIVISION — LIC. NO.:
ARCHITECT: JOHN SPARANO
DESIGNED BY: MAROKO & SHWE, INC.
DRAWN BY: N.W. S.N
CHECKED BY: J.S
APPROVED BY:

VERTICAL CONTROL:
HORIZONTAL CONTROL:

SHEET TITLE: CONTROLS

PROJECT: GRANADA HILLS POOL AND BATHHOUSE REPLACEMENT PROJECT
ADDRESS: 16730 CHATSWORTH STREET GRANADA HILLS, CA 91344

BID SET
PROJECT ISSUE DATE:06/22/21

WORK ORDER NO. #E170517
PLAN FILE NO.
DRAWING NO. M5.12
SHEET - OF SHEETS -

PLOTTED:11/30/2018 3:19:46 PM

THE CITY OF LOS ANGELES OR ITS OFFICERS OR AGENTS SHALL NOT BE RESPONSIBLE FOR THE ACCURACY OR COMPLETENESS OF ELECTRONIC COPIES OF THIS PLAN SHEET.

REVISION DATES (DESIGN STAGE ONLY)

SHEET ISSUE DATE: 03 JULY 2018

FILE PATH: V:\17019.00 Granada Hills Pool Renovation\Hvac\M5.12.dwg

© 2018 Maroko & Shwe, Inc. All rights reserved.

UTILITY SCHEDULE

		FIXTURE UNITS	G.P.M.	POOL (G.P.M.)	TOTAL (G.P.M.)	METER SIZE(INCH)	PRESSURE (P.S.I.)	HARDNESS (GR/GAL)
COLD WATER	BATHHOUSE	147	84	–	84	2" (E)	104–65	
	POOL EQUIPMENT BUILDING	12	29	200	200	3" (E)		

		FIXTURE UNITS	DRAIN(INCH)	BUILDING SEWER(INCH)	ON–SITE SEWER(INCH)	PUBLIC SEWER(INCH)
SEWER	BATHHOUSE	219 (94+53+72)	3 (4")	SEE CIVIL DRAWINGS	SEE CIVIL DRAWINGS	SEE CIVIL DRAWINGS
	POOL EQUIPMENT BUILDING	–	1 (4") 1 (6")			

		SPACE HEATING	DOMESTIC WATER HEATING	SWIMMING POOL HEATING	TRAINING POOL HEATING	TOTAL	TOTAL DEVELOPED LENGTH FROM REGULATOR TO FURTHEST OUTLET (8" WC)
GAS(CFH)	BATHHOUSE	160	1,000	–	–	1,160	300 FT.
	POOL EQUIPMENT BUILDING	–	250	2900	332	3482	100 FT.
		160	1,250	2900	332	4,642	–

TOTAL GAS DEVELOPED LENGTH FROM GAS METER TO GAS REGULATOR AT BATH HOUSE = 300 FT.

PIPE SCHEDULE

				DOMESTIC WATER				WASTE PIPE	
				COLD WATER		HOT WATER			
	TYPE OF FIXTURE	SYM	QUANTITY	FIXTURE UNIT PER FIXTURE	TOTAL FIXTURE UNIT	FIXTURE UNIT PER FIXTURE	TOTAL FIXTURE UNIT	FIXTURE UNIT PER FIXTURE	TOTAL FIXTURE UNIT
BATH HOUSE	WATER CLOSET	WC–1/WC–2/WC–3	12	5	60	–	–	5	60
	URINAL	U–1	5	5	25	–	–	5	25
	LAVATORY	L–1	12	1	12	1	12	1	12
	SHOWER HEAD	SH–1 /SH–2	17	2	34	2	34	–	–
	SERVICE SINK	SS–1	2	3	6	3	6	3	6
	DRINKING FOUNTAIN	DF–1/DF–2	4	1	4	–	–	1	4
	HOSE BIBB	HB–1	4	2.5/1	6	–	–	–	–
	FLOOR SINK	FS–1	2	–	–	–	–	2	4
	FLOOR DRAIN	FD–1	54	–	–	–	–	2	108
	TOTAL SUPPLY				147		52		219
POOL EQUIPMENT BUILDING	SINK	S–1	1	2	2	2	2	2	2
	HOSE BIBB	HB–1	4	2.5	10	–	–	–	–
	FLOOR SINK	FS–1	1	–	–	–	–	2	2
	FLOOR DRAIN	FD–1	10	–	–	–	–	2	20
	TOTAL SUPPLY				12		2		24

PLUMBING SHEET INDEX

	SHEET NO.	SHEET DESCRIPTION
1	P0.10	LEGEND, GENERAL NOTES AND SHEET INDEX
2	P0.11	SCHEDULES
3	P0.12	SCHEDULES
4	PSD1.01	PLUMBING SITE DEMOLITION PLAN
5	PS1.01	PLUMBING SITE PLAN
6	P2.00	DEMOLITION FLOOR PLANS
7	P2.10	FACILITY FLOOR PLAN
8	P2.11	ROOF PLANS
9	P3.10A	ENLARGED FLOOR PLANS (WATER AND GAS)
10	P3.10B	ENLARGED FLOOR PLANS (WASTE AND VENT)
11	P3.11A	ENLARGED FLOOR PLANS (WATER AND GAS)
12	P3.11B	ENLARGED FLOOR PLANS (WASTE AND VENT)
13	P3.12	MEN'S RR (120) AND JAN (112) – WATER PIPING LAYOUT
14	P3.13	MEN'S RR (120) AND JAN (112) – WASTE AND VENT PIPING LAYOUT
15	P3.14	WOMEN'S RR (121) AND JAN (113) – WATER PIPING LAYOUT
16	P3.15	WOMEN'S RR (121) AND JAN (113) – WASTE AND VENT PIPING LAYOUT
17	P3.16	FAM/UNISEX (108) AND (109) – WATER PIPING LAYOUT
18	P3.17	FAM/UNISEX (108) AND (109) – WASTE AND VENT PIPING LAYOUT
19	P3.18	STAFF RR (104) – PLUMBING PIPING LAYOUT
20	P4.11A	BATHHOUSE – COLD AND HOT WATER RISER DIAGRAMS – PART 1
21	P4.11B	BATHHOUSE – COLD AND HOT WATER RISER DIAGRAMS – PART 2
22	P4.12A	BATHHOUSE – WASTE AND VENT RISER DIAGRAMS – PART 1
23	P4.12B	BATHHOUSE – WASTE AND VENT RISER DIAGRAMS – PART 2
24	P4.13	GAS RISER DIAGRAMS
25	P4.14	POOL EQUIPMENT BUILDING – COLD AND HOT WATER RISER DIAGRAMS
26	P4.15	POOL EQUIPMENT BUILDING – WASTE AND VENT RISER DIAGRAMS
27	P4.16	POOL EQUIPMENT BUILDING – GAS AND STORM DRAIN RISER DIAGRAMS
28	P5.11	DETAILS

PLUMBING MATERIALS

1. WATER PIPING: TYPE "L" COPPER WITH WROUGHT COPPER FITTINGS, WITH LEAD FREE SOLDER.
2. WASTE AND VENT PIPING: SERVICE WEIGHT CAST IRON PIPE WITH STAINLESS STEEL ON–HUB COUPLINGS. VENT PIPING 2" AND SMALLER MAY BE SCHEDULE 40 GALVANIZED STEEL WITH THREADED FITTINGS.
3. GAS PIPING: SCHEDULE 40 BLACK STEEL WITH 150 POUND MALLEABLE IRON SCREWED FITTINGS FOR 2½" AND SMALLER. SCHEDULE 40 BLACK STEEL WITH WELDED FITTINGS FOR 3" AND LARGER.
4. CONDENSATE DRAIN PIPING: TYPE "M" COPPER WITH WROUGHT COPPER FITTINGS.

GENERAL NOTES

1. FOR EXACT LOCATION AND HEIGHT OF PLUMBING FIXTURES SEE ARCHITECTURAL PLANS AND ELEVATIONS.
2. COMPLY WITH ALL APPLICABLE CODES, PERTINENT REGULATIONS OF ALL AGENCIES HAVING JURISDICTION.
3. SEE CONTRACT SPECIFICATIONS FOR INSTALLATION, MATERIALS, TESTING, CLEANING AND MISCELLANEOUS GENERAL REQUIREMENTS.
4. CONTRACTOR TO COORDINATE ALL WORK WITH OTHER TRADES PRIOR INSTALLATION OF PIPING AND EQUIPMENT.
5. PENETRATIONS THROUGH RATED WALLS AND FLOORS TO BE SEALED WITH MATERIAL CAPABLE OF WITHSTANDING FLAMES AND HOT GASES WHEN SUBJECTED TO THE TESTING STANDARD REQUIREMENT ASTM–E–814 FOR FIRE STOPS.
6. INSTALL CLEAN OUTS AS REQUIRED BY THE 2016 UPC SECTION 707.0 AND 719.0
7. ALL BURRED ENDS OF DOMESTIC WATER PIPING AND TUBING SHALL BE REAMED TO THE FULL BORE OF THE PIPE OR TUBE AND ALL CHIPS SHALL BE REMOVED. TOOLS USED TO CUT OR REAM PIPE SHALL BE KEPT FREE OF OIL OR GREASE AND WHERE SUCH CONTAMINATION HAS OCCURRED THE ITEMS AFFECTED SHALL BE REWORKED AND RINSED.
8. ALL UTILITIES TO TERMINATE 5'–0" FROM BUILDING LINE. FOR CONTINUATION SEE CIVIL DRAWINGS.
9. STORM & OVERFLOW DRAIN PIPE SIZES BASED ON RAINFALL OF 2" PER HOUR.
10. NO CONCEALED SLIP JOINT CONNECTIONS WILL BE PERMITTED AT FIXTURES.
11. PIPE INSTALLED PIERCES OR SWEEPS DOWN THROUGH CONCRETE FOOTING SHALL BE DOUBLE WRAPPED WITH 1/8 THICK SHEET CLOSED CELL POLYETHYLENE.
12. FURNISH & INSTALL MANUFACTURED WATER HAMMER ARRESTOR AT ALL QUICK–CLOSING VALVES, OUTLETS AND DEVICES.
13. ANY DEVIATION FROM DWGS. THAT REQUIRE PENETRATION THROUGH SHEAR WALL SHALL BE SUBMITTED TO THE ARCHITECT FOR REVIEW. THE ADDITIONAL COST OF ANY REINFORCEMENT TO THE SHEAR WALLS AS A RESULT OF DEVIATIONS FROM THE PLUMBING DWGS. SHALL BE AT THE CONTRACTOR'S EXPENSE.
14. ALL EQUIPMENT ANCHORAGE SHALL BE DETAILED ON DRAWINGS AND SHALL CONFORM TO 2016 CBC SECTION 1632A AND TABLE 16 A–O.
15. HEIGHT OF FIXTURE SHALL BE VERIFIED WITH ARCHITECT, THRU PROJECT MANAGER, PRIOR TO INSTALLATION.
16. POTABLE WATER TO ALL HOSE BIBBS. HOSE BIBB SHALL BE PROVIDED WITH VACUUM BREAKER AND SHUTOFF VALVES.
17. PLUMBING MATERIAL AND INSTALLATION SHALL BE ACCORDANCE WITH TITLE 24, CAC PART 5 2016, CALIFORNIA PLUMBING CODE.
18. ALL VALVES, TRAP PRIMER, WATER HAMMER ARRESTOR AND COCKS SHALL BE LOCATED TO BE READILY ACCESSIBLE. WHERE VALVES ARE INSTALLED WITHIN, OR BEHIND WALLS, PARTITIONS OR CEILINGS OR CEILINGS, AN ACCESS PANEL SHALL BE INSTALLED.
19. TRAP PRIMERS SERVING MORE THAN ONE FIXTURE SHALL BE PROVIDE WITH A DISTRIBUTION UNIT AND A SEPARATED LINE SHALL BE PROVIDED TO EACH FIXTURE FROM THE TRAP PRIMER.
20. ALL EXISTING STORM DRAIN LINES SHALL BE CLEANED FOR PROPER FUNCTION.
21. REPLACE ALL EXISTING CLEAN OUT COVER AND CAP.
22. ALL SHUT OFF VALVE (SOV) INSIDE THE BUILDING SHOULD BE BALL VALVE.
23. BEFORE BEGINNING ANY WORK, CONTRACTOR SHALL THOROUGHLY EXAMINE (VERIFY) ALL EXISTING CONDITIONS, POINTS OF CONNECTIONS, SIZES, LOCATION AND AVAILABILITY OF EXISTING UTILITIES.
24. CONTRACTOR SHALL PROVIDE FINAL CONNECTIONS FOR ALL EQUIPMENT AND FIXTURES, INCLUDING TRAPS, TRIM, SHUTOFF VALVES, STOPS, APPROVED BACK FLOW PREVENTERS.
25. COORDINATE AND VERIFY EXACT LOCATION, SIZE, POINTS OF CONNECTION AND INVERT ELEVATIONS OF UTILITY SERVICE PIPING BEFORE TRENCHING OR INSTALLATION.
26. COORDINATE WITH ARCHITECTURAL DRAWINGS FOR WALL AND PARTITION CONSTRUCTION AND THICKNESS WHERE PLUMBING PIPING OR EQUIPMENT IS INDICATED.
27. THE LOCATION AND ELEVATION OF ALL PLUMBING PIPING SHALL BE VERIFIED AND COORDINATED WITH ALL OTHER TRADES, STRUCTURAL CONDITIONS AND BUILDING CONSTRUCTION, PRIOR TO START OF INSTALLATION.
28. ALL PLUMBING FIXTURES SHALL MEET THE FLOW REQUIREMENTS SPECIFIED IN THE LOS ANGELES PLUMBING CODE (LAPC 401.3)
29. a. ALL FIXTURES, EQUIPMENT, PIPING, AND MATERIALS SHALL BE LISTED.
    b. ALL FAUCETS IN PUBLIC RESTROOMS SHALL BE SELF–CLOSING OR SELF–CLOSING METERING FAUCETS.
    c. PUBLIC LAVATORIES SHALL HAVE CONTROLS TO LIMIT THE WATER TEMPERATURE TO 110°F.
    d. WATER PIPE AND FITTINGS WITH A LEAD CONTENT WHICH EXCEEDS 0.25% SHALL BE PROHIBITED IN SYSTEMS CONVEYING POTABLE WATER.
    e. SHOWERS SHALL BE INSTALLED WITH INDIVIDUAL TEMPERING VALVES.
    f. NEW PLUMBING FIXTURES AND FITTINGS SHALL NOT BE EXCEED THE MAXIMUM ALLOWABLE FLOW RATES SPECIFIED IN SECTION 5.303.3.

PLUMBING LEGEND

ALL ITEMS INDICATED IN THIS LEGEND NOT NECESSARILY USED ON THE DRAWINGS

SYMBOL	ABBREVIATION	DESCRIPTION
		RELIEF VALVE
	TP	TRAP PRIMER
		THERMOMETER
		STRAINER
	G.V./ S.O.V.	GATE VALVE / SHUTOFF VALVE
	C.V.	CHECK VALVE
	B.V.	BALANCING VALVE / GLOBE VALVE
	U.	UNION
	W.H.A.	WATER HAMMER ARRESTOR
	W/S	WASTE OR SOIL ABOVE FLOOR
	W/S	WASTE OR SOIL BELOW FLOOR OR GRADE
	F.C.O.	FLOOR CLEANOUT
	Y.C.O.	YARD CLEANOUT
	W.C.O.	WALL CLEANOUT
SD	SD	STORM DRAIN ABOVE FLOOR
OD	OD	OVERFLOW DRAIN ABOVE FLOOR
	CW	DOMESTIC COLD WATER
	HW	DOMESTIC HOT WATER
	HWR	DOMESTIC HOT WATER RETURN
	V	VENT
G	G	GAS (8" WATER COLUMN)
ICW	ICW	INDUSTRIAL COLD WATER
MPG	MPG	MEDIUM PRESSURE GAS (5#)
CD	CD	CONDENSATE DRAIN
		EQUIPMENT DESIGNATION
		DETAIL REFERENCE
	P.O.C.	POINT OF CONNECTION
		DIRECTION OF FLOW
E	E___	EXISTING PIPING (CW, TW, HW, HWR, V etc.)
EW	EW	EXISTING WASTE
	ABV.	ABOVE
	ADA	AMERICANS WITH DISABILITIES ACT COMPLIANCE
	A.P.	ACCESS PANEL
	BEL.	BELOW
	CFH	CUBIC FEET PER HOUR
	CONT.	CONTINUATION
	DN.	DOWN
	DWG.	DRAWING
	(E)	EXISTING
	EQUIP.	EQUIPMENT
	FLR.	FLOOR
	F.T.	FLUSH TANK
	F.U.	FIXTURE UNIT
	F.V.	FLUSH VALVE
	G.P.F.	GALLONS PER FLUSH
	I.E.	INVERT ELEVATION
	ITV.	INSPECTOR TEST DRAIN VALVE
	MECH.	MECHANICAL
	MTD.	MOUNTED
	N.I.C.	NOT IN CONTRACT
	PSIG	POUNDS PER SQUARE INCH GAUGE
	R.I. & C.	ROUGH–IN AND CONNECT
	RM.	ROOM
	SHT.	SHEET
⌀'	SQ.FT., (SF)	SQUARE FEET
	TYP.	TYPICAL
	U.O.S.	UNDER OTHER SECTION
	V.B.	VACUUM BREAKER
	V.B.F.	VENT BELOW FLOOR
	V.T.R.	VENT THRU ROOF
	W.C.	WATER COLUMN
	B.F.P.	BACK FLOW PREVENTER
		EXIST PLUMBING TO BE REMOVED

BUREAU OF ENGINEERING
OFFICIAL RECORD

BID SET
PROJECT ISSUE DATE:06/22/21

CITY OF LOS ANGELES
DEPARTMENT OF PUBLIC WORKS
BUREAU OF ENGINEERING

ENGINEERING
CITY OF LOS ANGELES

NO.	REVISION DESCRIPTION	DATE	BY

BUILDING NO. –

INDEX NO. RP-300118

CITY ENGINEER

	DATE:
GARY LEE MOORE, PE, ENV SP	07/15/20
ARCHITECTURAL DIVISION	07/15/20
ARCHITECT/ENGINEER: JAMES H. SHWE LIC. NO.: M26903	07/15/20
DESIGNED BY: MAROKO & SHWE, INC.	07/15/20
DRAWN BY: S.C	07/15/20
CHECKED BY: J.S	
APPROVED BY:	

VERTICAL CONTROL:
HORIZONTAL CONTROL:

SHEET TITLE: LEGEND, GENERAL NOTES AND SHEET INDEX

PROJECT: GRANADA HILLS POOL AND BATHHOUSE REPLACEMENT PROJECT

ADDRESS: 16730 CHATSWORTH STREET GRANADA HILLS, CA 91344

WORK ORDER NO. #E170517

PLAN FILE NO.

DRAWING NO. P0.10

SHEET – OF –

PLOTTED:

SHEET ISSUE DATE: 15 JULY 2020 FILE PATH:

REVISION DATES (DESIGN STAGE ONLY)

THE CITY OF LOS ANGELES OR ITS OFFICERS OR AGENTS SHALL NOT BE RESPONSIBLE FOR THE ACCURACY OR COMPLETENESS OF ELECTRONIC COPIES OF THIS PLAN SHEET.

PLUMBING ROUGH-IN SCHEDULE, CONNECTIONS & SPECIFICATIONS

SYM.	DESCRIPTION	FIXTURE UNIT W/S	FIXTURE UNIT CW	MIN. BRANCH SIZE (INCH) W	MIN. BRANCH SIZE (INCH) V	MIN. BRANCH SIZE (INCH) CW	MIN. BRANCH SIZE (INCH) HW	MIN. BRANCH SIZE (INCH) TW	TRAP SIZE (INCH)	TYPE	APPLICATION	MANUFACTURER & MODEL	SPECIFICATIONS	REMARKS
WC-1	WATER CLOSET	6	5	4	2	1-1/2	*	*	INT	WALL HUNG	REGULAR ADA	TOTO CT708U(G)X	1. FIXTURE: WALL HUNG, VITREOUS CHINA, ELONGATED FRONT BOWL, WITH 1.0 GALLON PER FLUSH FLUSHOMETER VALVE. 2. FLUSH VALVE: EXPOSED ECOPOWERL FLUSH VALVE, 1.0 GALLON PER FLUSH, TOTO TET1UAX32#CP OR EQUAL. 3. SEATS: OPEN FRONT SEAT, TOTO MODEL SC534 OR EQUAL. 4. CARRIER: J.R. SMITH 200 SERIES OR EQUAL BY ZURN. WHERE SPACE DOES NOT PERMIT USE J.R. SMITH 400 SERIES.	INSTALL WITH REGULAR HEIGHT. FOR ADA HEIGHT, REFER ARCH. DRAWING.
WC-2	WATER CLOSET	6	5	4	2	1-1/2	*	*	INT	WALL HUNG	REGULAR ADA	ACORN DURA-WARE 2100-T-1.28 OR EQUAL	1. FIXTURE: 14 GAGE, TYPE 304 STAINLESS STEEL. BLOWOUT JET TYPE, ELONGATED BOWL AND SELF-DRAINING FLUSHING RIM, WITH WATER CONSUMPTION OF 1.28 GPF. 2. SEATS: OLSONITE NO. 95SS OR BENEKE NO. 525WHITE SOLID PLASTIC OPEN FRONT SEAT. 3. CARRIER: J.R. SMITH 200 SERIES OR EQUAL BY ZURN. WHERE SPACE DOES NOT PERMIT USE J.R. SMITH 400 SERIES.	
WC-3	WATER CLOSET	6	5	4	2	1-1/2	*	*	INT	FLOOR MOUNT	REGULAR ADA	ACORN 1695-T-1.28 OR EQUAL	1. FIXTURE: 14 GAGE, TYPE 304 STAINLESS STEEL. SIPHON JET TYPE, ELONGATED BOWL AND SELF-DRAINING FLUSHING RIM, FLOOR OUTLET WITH WATER CONSUMPTION OF 1.28 GPF. 3. SEATS: OLSONITE NO. 95SS OR BENEKE NO. 525WHITE SOLID PLASTIC OPEN FRONT SEAT. 4. CARRIER: J.R. SMITH 200 SERIES OR EQUAL BY ZURN. WHERE SPACE DOES NOT PERMIT USE J.R. SMITH 400 SERIES.	
U-1	URINAL	5	5	2	1-1/2	1-1/2	*	*	INT	WALL HUNG	REGULAR ADA	ACORN PENAL-WARE 1709HEU OR EQUAL	1. FIXTURE: LOW FLUSH URINAL, 1/8 GALLON. WALL HUNG, 16 GAGE TYPE 304 STAINLESS STEEL BOWL. 2. FLUSH VALVE: EXPOSED MANUAL FLUSH VALVE WITH MANUAL HANDLE, 1/8 GALLONS PER FLUSH.	INSTALL WITH REGULAR HEIGHT. FOR ADA HEIGHT, REFER ARCH. DRAWING.
L-1	LAVATORY	1	1	2	1-1/2	1/2	1/2	*	1-1/4 x 1-1/2	UNDERCOUNTER MOUNT	REGULAR ADA	AMERICAN STANDARD OVALYN UNIVERSAL ACCESS MODEL 9482.000 OR EQUAL KOHLER, ZURN	1. FIXTURE: VITREOUS CHINA, UNGLAZED RIM FOR UNDER COUNTER MOUNTED WITH REAR OVERFLOW SINK. SINK SIZE: 19" X 15-3/4", BOWL SIZES: 16-1/4" WIDE, 13-1/4" FORNT TO BACK, 4" DEEP. 2. FAUCET: SLOAN MODEL ETF-80, 24 VAC, SENSOR ACTIVATED FAUCET, 0.5 GPM VANDAL RESISTANT SPRAY HEAD. 3. DRAIN: AMERICAN STANDARD NO. 2411.015 GRID DRAIN. 4. SUPPLIES: CHICAGO NO. 1017ABCP-MM 1/2" I.P.S. FLEXIBLE SUPPLIES WITH LOOSE KEY STOPS. 5. INSULATION: WATER SUPPLY & ALL DRAINAGE PIPES UNDER LAVATORY WITH TRUEBRO LAV GUARD.	INSTALL WITH REGULAR HEIGHT. FOR ADA HEIGHT, REFER ARCH. DRAWING. HOT WATER SHALL BE LIMITED TO A MAXIMUM OF 110°F.
L-2	LAVATORY	1	1	2	1-1/2	1/2	1/2	*	1-1/4 x 1-1/2	WALL HUNG	REGULAR ADA	AMERICAN STANDARD NO. 0355.012, "LUCERNE" OR EQUAL KOHLER, ZURN	1. FIXTURE: VITREOUS CHINA, FOR CONCEALED ARM SUPPORT WITH FAUCET HOLES 4" ON CENTERS, SIZE: 20" X 18". 2. FAUCET: CHICAGO NO. ECAST3300ABCP METERING FAUCET WITH E2805 VANDAL RESISTANT SPRAY OUTLET. 3. DRAIN: KOHLER NO. K-7715 OR AMERICAN STANDARD NO. 2411.015 GRID DRAIN. 4. SUPPLIES: CHICAGO NO. 1017-MM 1/2" I.P.S. FLEXIBLE SUPPLIES WITH LOOSE KEY STOPS. 5. INSULATION: WATER SUPPLY & ALL DRAINAGE PIPES UNDER LAVATORY WITH TRUEBRO LAV GUARD.	INSTALL WITH REGULAR HEIGHT. FOR ADA HEIGHT, REFER ARCH. DRAWING. HOT WATER SHALL BE LIMITED TO A MAXIMUM OF 110°F.
SH-1	SHOWER	*	2	*	1-1/2	3/4	3/4	*	*	WALL HUNG	ADA	ACORN 450 ADAWH-A SERIES	1. FIXTURE: SHOWER PACKAGE ASSEMBLY WITH ADA COMPLAINT CONTROL VALVE WITH LEVER HANDLE OR PUSHBUTTON, A FIXED UPPER SHOWER HEAD, A LEVER HANDLE DIVERTER VALVE, A QUICK DISCONNECT HAND SHOWER WITH VACUUM BREAKER AND FLOW CONTROL, VALVE SUPPLY FLEXIBLE HOSE CONNECTORS.	INSTALL WITH REGULAR HEIGHT. FOR ADA HEIGHT, REFER ARCH. DRAWING. HOT WATER SHALL BE LIMITED TO A MAXIMUM OF 110°F.
SH-2	SHOWER	*	2	*	1-1/2	3/4	3/4	*	*	WALL HUNG	REGULAR	ACORN 450 SERIES	1. FIXTURE: ACORN APEX SURFACE-MOUNTED SHOWER, 16 GAGE, TYPE 304 STAINLESS STEEL WITH SATIN FINISH. SHOWER HEAD IS SOLID BRASS, TRIPLE CHROME-PLATED AND INCLUDE BUILT-IN 1.6 GPM FLOW RESTRICTOR, SELF-CLEANING, ADJUSTABLE SPRAY PATTERN FROM A COARSE STREAM TO A FINE MIST.	
SS-1	SERVICE SINK	3	3	3	1-1/2	3/4	3/4	*	3	CORNER SINK	-	ACORN TERRAZO-WARE TCR-24" OR EQUAL	1. FIXTURE: 24" PRECAST TERRAZZO COMPOSED OF MARBLE CHIPS CAST IN PORTLAND CEMENT CORNER MOP SINK. ALL EXPOSED SURFACES SHALL BE GROUND AND SEALED. INCLUDED INTEGRAL DRAIN WITH STAINLESS STEEL STRAINER FOR 3" DRAIN. 2. FAUCET: T&S B-0655-01, WALL FAUCET WITH VACUUM BREAKER, 6"WRIST ACTION HANDLE, ADJ. INLETS WITH STOPS, WALL BRACE, 3/4" GARDEN HOSE THREAD OUTLET. 3. DRAIN: K-16 FLOOR MOP SINK REPLACEMENT DRAIN.	
DF-1	DRINKING FOUNTAIN	1	1	2	1-1/2	1/2	*	*	1-1/4 x 1-1/2	OUTDOOR WALL MOUNT HI-LOW	ADA	HAWS 1117LN OR EQUAL	1. FIXTURE: WALL MOUNTED, ONE PIECE 14 GAGE TYPE 304 STAINLESS STEEL DUAL HEIGHT (HIGH, LOW) DRINKING FOUNTAIN WITH ADJUSTABLE FLOW PUSH BUTTON ACTIVATED CARTRIDGE, INTEGRAL 1/4"THICK STAINLESS STEEL BACK PLATE AND 1-1/4"NPT TRAP. POLISHED CHROME-PLATED BRASS BUBBLER HEAD WITH INTEGRAL BASIN SHANK. 2. CARRIER: HAWS NO. 6717 WALL SUPPORT MOUNTING PLATE.	PROVIDE WATER FILTER SYSTEM, PROVIDE BOTTLE FILLER MURDOCK MODEL BF1S AND ACCESSORIES.
DF-2	DRINKING FOUNTAIN	1	1	2	1-1/2	1/2	*	*	1-1/4 x 1-1/2	OUTDOOR WALL MOUNT SINGLE	ADA	HAWS 1107L-BP7 OR EQUAL	1. FIXTURE: WALL MOUNTED, ONE PIECE 14 GAGE TYPE 304 STAINLESS STEEL SINGLE BUBBLER DRINKING FOUNTAIN WITH ADJUSTABLE FLOW PUSH BUTTON ACTIVATED CARTRIDGE, INTEGRAL 1/4"THICK STAINLESS STEEL BACK PLATE AND 1-1/4"NPT TRAP. POLISHED CHROME-PLATED BRASS BUBBLER HEAD WITH INTEGRAL BASIN SHANK. 3. CARRIER: HAWS NO. 6700 WALL SUPPORT MOUNTING PLATE.	
FD-1	FLOOR DRAIN	*	*	2	1-1/2	*	*	*	2			J.R. SMITH NO. 2005Y-A-U-P050	1. FLOOR DRAIN WITH DUCO CAST IRON BODY, FLASHING COLLAR, PROTECTOR CAP AND NICKEL BRONZE ADJUSTABLE STRAINER HEAD WITH SECURED SQUARE HOLE AND VANDAL PROOF ROUND GRATE. TRAP PRIMER CONNECTION.	-
FD-2	FLOOR DRAIN	*	*	4	1-1/2	*	*	*	4			J.R. SMITH NO. 2005Y-A-U-P050	1. FLOOR DRAIN WITH DUCO CAST IRON BODY, FLASHING COLLAR, PROTECTOR CAP AND NICKEL BRONZE ADJUSTABLE STRAINER HEAD WITH SECURED SQUARE HOLE AND VANDAL PROOF ROUND GRATE. TRAP PRIMER CONNECTION.	-
TP-1	TRAP PRIMER	*	*	*	*	1/2	*	*	*		ALL FLOOR DRAINS AND FLOOR SINK	MIFAB MR-500-NPB OR EQUAL	1. AUTOMATIC, MULTI-TRAP PRIMER, CAST BRONZE WITH ACCESS PANEL. OPERATED WITH PRESSURE DROP OF 3 PSI.	PROVIDE IN ACCESS PANEL.
TP-2	TRAP PRIMER	*	*	*	*	1/2	*	*	*		ALL FLOOR DRAINS @ REMOTE AREA	PPP INC PRIME-RITE MPB-500-12V OR EQUAL	1. PPP INC. PRIME RITE AUTOMATIC VALVE 1/2" IN AND OUT. MINI PRIME, BATTERY OPERATED TRAP PRIMER.	PROVIDE IN ACCESS PANEL.
WHA-1	WATER HAMER ARESTOR	*	*	*	*	*	*	*	*			J.R. SMITH, HYROTROLS OR PPP INC.		PROVIDE IN ACCESS PANEL.
FS-1	FLOOR SINK	1	*	3	1-1/2	*	*	*	3			J.R. SMITH NO. 3140Y OR ZURN Z-1901	1. FLOOR SINK WITH DOME BOTTOM STRAINER. FLASHING CLAMP IN MEMBRANE FLOORS, OPEN TOP AND TRAP PRIMER	
HB-1	HOSE BIBB	*	1	*	*	3/4 / 1	*	*	*	WALL FLANGE AND DOOR	TOILET ROOM /EXTERIOR	ACORN NO. 8151 OR EQUAL	1. RECESSED WALL HOSE BOX WITH 16 GAGE STAINLESS STEEL AND SATIN FINISHED WALL FLANGE. SCREWDRIVER STOP, VANDAL RESISTANT LOCK SHIELD BONNET AND REMOVABLE LOOSE KEY HANDLE. VACUUM BREAKER AND CHROME FINISH BRASS CASTING VALVE WITH ONE PIECE CONSTRUCTION BOX WITH VANDAL RESISTANT LOCKING COVER.	
HB-2	HOSE BIBB FOR EXTERIOR FLOOR INSTALLATION	*	1	*	*	1	*	*	*	GROUND HYDRANT	POOL DECK NEAR LIFT/ EXTERIOR	ACORN 8171-SSLF OR EQUAL	1. RECESSED HOSED BOX FROM 18 GAGE, TYPE 304 STAINLESS STEEL, WITH FOUR STAINLESS STEEL CLIPS FOR ANCHORING TO THE FLOOR, FOR FLUSH WITH FLOOR OVER ONE CUBIC FOOT OF PEA GRAVEL. VALVE AND STOP BODY IS CAST BRONZE WITH EXPOSED PARTS CHROME-PLATED. VALVE SHALL BE CARTRIDGE-OPERATED TYPE WITH VANDAL-RESISTANCE LOCKSHIELD BONNETS AND A REMOVABLE WHEEL HANDLE. PROVIDE VACUUM BREAKER.	PROVIDE SERVICE SHUT OFF VALVE.
EEW-1	EMERGENCY SHOWER & EYE WASHER (1)	*	6	*	*	1	*	*	INT				1. SEE SCHEDULE ON AQUATICS DRAWINGS.	PROVIDE MIXING VALVE.
S-1	COUNTER MOUNTED SINK	2	2	2	1-1/2	3/4	3/4	*	2	DROP-IN TYPE	-		1. SEE AQUATIC DWG. MR-6 FOR DETAILS.	
RD-1	ROOF DRAIN	*	*	*	*	*	*	*	*	-		JR SMITH 1010Y-ERC-CID OR EQUAL	1. DUCO CAST IRON BODY WITH COMBINED FLASHING CLAMP AND GRAVEL STOP WITH POLYETHYLENE DOME.	
RD-2	OVERFLOW DRAIN	*	*	*	*	*	*	*	*	-		JR SMITH 1080Y-ERC-CID OR EQUAL	1. DUCO CAST IRON BODY, FLASHING CLAMP AND GRAVEL STOP WITH POLYETHYLENE DOME, AND CAST IRON WATER DAM. TERMINATE ON A WALL AT MINIMUM 10" ABOVE FINISHED GRADE.	

(1) REFER TO AQUATICS DWGS FOR ADDITIONAL INFO.

THE CITY OF LOS ANGELES OR ITS OFFICERS OR AGENTS SHALL NOT BE RESPONSIBLE FOR THE ACCURACY OR COMPLETENESS OF ELECTRONIC COPIES OF THIS PLAN SHEET.

FILE PATH:

SHEET ISSUE DATE: 15 JULY 2020

REVISION DATES: (DESIGN STAGE ONLY)

BUREAU OF ENGINEERING

OFFICIAL RECORD

DEPARTMENT OF PUBLIC WORKS

CITY OF LOS ANGELES

ENGINEERING

CITY OF LOS ANGELES

NO.	REVISION DESCRIPTION	DATE	BY

BUILDING NO. -

INDEX NO. RP-300118

PROFESSIONAL ENGINEER ★ CALIFORNIA ★ GARY LEE MOORE No. 26903 Renewal: 9/30/2021 CIVIL

CITY ENGINEER DATE:

GARY LEE MOORE, PE, ENV SP 07/15/20

ARCHITECTURAL DIVISION

ARCHITECT/ENGINEER: JAMES H. SHWE LIC. NO.: M26903 07/15/20

DESIGNED BY: MAROKO & SHWE, INC. 07/15/20

DRAWN BY: S.C

CHECKED BY: J.S 07/15/20

APPROVED BY: 07/15/20

BID SET

PROJECT ISSUE DATE:06/22/21

VERTICAL CONTROL:

HORIZONTAL CONTROL:

SHEET TITLE: SCHEDULES

PROJECT: GRANADA HILLS POOL AND BATHHOUSE REPLACEMENT PROJECT

ADDRESS: 16730 CHATSWORTH STREET GRANADA HILLS, CA 91344

WORK ORDER NO. #E170517

PLAN FILE NO.

DRAWING NO. P0.11

SHEET - OF SHEETS -

PLOTTED:

© 2020 City of Los Angeles. All Rights Reserved. Unauthorized use prohibited.

DOMESTIC WATER DESIGN REQUIREMENTS

BATH HOUSE

		COLD WATER	
A. DESIGN BASE PRESSURE:	MAXIMUM	104	PSI
PER 213-367-0973 (WEST VALLEY AREA) ON 11-06-2017	MINIMUM	65	PSI
B. TOTAL FIXTURE UNITS:	FIXTURE UNITS	147	F.U.
C. TOTAL WATER DEMAND:		82	GPM
D. RESIDUAL PRESSURE REQUIRED AT REMOTE OUTLET:		25.00	PSI
E. PRESSURE LOSS DUE TO HEIGHT 15 FT*0.433		6.50	PSI
F. PRESSURE LOSS THRU 2"(E) METER @ 85 GPM		3.00	PSI
G. PRESSURE LOSS THRU 3" RPBFP DEVICE @ 85 GPM		4.00	PSI
H. OTHER PRESSURE LOSSES 3" PRV		12.00	PSI
MIXING VALVE FOR 48 GPM		5.00	PSI
I. TOTAL PRESSURE LOSS		50.50	PSI
J. AVAILABLE DESIGN PRESSURE @ PRV		65.00	PSI
K. PRESSURE AVAILABLE FOR FRICTION LOSS		9.51	PSI
L. DEVELOPED PIPE LENGTH:	BUILDING TO LAST FIXTURE	600.00	FT
	25 % FOR FITTINGS	150.00	FT
	TOTAL DEVELOPED LENGTH	750.00	FT

ALLOWABLE FRICTION LOSS PER 100' OF PIPE 100(9.51) / (750.00) 1.27 FT

COLD WATER PIPE SIZES BASED ON TYPE "L" COPPER 1.0 PSI/100' & 5 FPS MAX.

PIPE SIZE	F.T. F.U.	F.V. F.U.	PIPE SIZE	F.T. F.U.	F.V. F.U.	PIPE SIZE	F.T. F.U.	F.V. F.U.
1/2"	*	*	1 1/2"	21	*	4"	843	815
3/4"	2	*	2"	56	14	*	*	*
1"	6	*	2 1/2"	152	61	*	*	*
1 1/4"	12	*	3"	306	187			

HOT WATER PIPE SIZES BASED ON TYPE "L" COPPER 1.0 PSI/100' & 5 FPS MAX.

PIPE SIZE	F.T. F.U.	F.V. F.U.	PIPE SIZE	F.T. F.U.	F.V. F.U.	PIPE SIZE	F.T. F.U.	F.V. F.U.
1/2"	*	*	1 1/2"	21	*	4"	843	*
3/4"	2	*	2"	56	*	*	*	*
1"	6	*	2 1/2"	152	*	*	*	*
1 1/4"	12	*	3"	316	*			

DOMESTIC WATER DESIGN REQUIREMENTS

POOL EQUIPMENT BUILDING

		COLD WATER	
A. DESIGN BASE PRESSURE:	MAXIMUM	104	PSI
PER 213-367-0973 (WEST VALLEY AREA) ON 11-06-2017	MINIMUM	65	PSI
B. TOTAL FIXTURE UNITS:	FIXTURE UNITS	12	F.U.
C. TOTAL WATER DEMAND:	POOL WATER DEMAND	200	GPM
D. RESIDUAL PRESSURE REQUIRED AT REMOTE OUTLET:		20.00	PSI
E. PRESSURE LOSS DUE TO HEIGHT 12 FT*0.433		5.20	PSI
F. PRESSURE LOSS THRU 4"(E) METER @ 200 GPM		3.30	PSI
G. PRESSURE LOSS THRU 3"(E) RPBFP DEVICE @ 200 GPM		8.00	PSI
H. OTHER PRESSURE LOSSES 3" PRV		12.00	PSI
MIXING VALVE FOR 48 GPM		5.00	PSI
I. TOTAL PRESSURE LOSS		53.00	PSI
J. AVAILABLE DESIGN PRESSURE @ PRV		65.00	PSI
K. PRESSURE AVAILABLE FOR FRICTION LOSS		11.50	PSI
L. DEVELOPED PIPE LENGTH:	BUILDING TO LAST FIXTURE	800.00	FT
	25 % FOR FITTINGS	200.00	FT
	TOTAL DEVELOPED LENGTH	1000.00	FT

ALLOWABLE FRICTION LOSS PER 100' OF PIPE 100(11.50) / (1000.00) 1.15 FT

COLD WATER PIPE SIZES BASED ON TYPE "L" COPPER 1.1 PSI/100' & 5 FPS MAX.

PIPE SIZE	F.T. F.U.	F.V. F.U.	PIPE SIZE	F.T. F.U.	F.V. F.U.	PIPE SIZE	F.T. F.U.	F.V. F.U.
1/2"	*	*	1 1/2"	22	*	4"	911	893
3/4"	2	*	2"	60	16	*	*	*
1"	7	*	2 1/2"	166	69	*	*	*
1 1/4"	13	*	3"	342	209			

HOT WATER PIPE SIZES BASED ON TYPE "L" COPPER 1.1 PSI/100' & 5 FPS MAX.

PIPE SIZE	F.T. F.U.	F.V. F.U.	PIPE SIZE	F.T. F.U.	F.V. F.U.	PIPE SIZE	F.T. F.U.	F.V. F.U.
1/2"	*	*	1 1/2"	22	*	4"	851	*
3/4"	2	*	2"	60	*	*	*	*
1"	7	*	2 1/2"	166	*	*	*	*
1 1/4"	13	*	3"	342	*			

EARTHQUAKE VALVE *

TAG	SERVICE	LOCATION	MANUFACTURER & MODEL	SIZE	CFH	REFERENCE RELEVANT DETAIL	REMARKS
EQV 1	NATURAL GAS	OUTSIDE OF THE POOL EQUIPMENT BLDG.	PACIFIC SEISMIC INC. 316 (60) NPT	3"	3,482	2/P5.11	EARTHQUAKE VALVE WITH GAS COCKS, AND UNIONS AT EACH END. PROVIDE INCREASER & REDUCER AS REQUIRED.
EQV 2	NATURAL GAS	OUTSIDE OF BATHHOUSE	PACIFIC SEISMIC INC. 316 (60) NPT	3"	1,160	2/P5.11	

PRESSURE REGULATING VALVE *

SYMBOL	SERVICE	LOCATION	CAPACITY (GPM)	MANUFACTURER & MODEL	SIZE (INCH)	SET PRESSURE (PSI)	OUTLET PRESSURE (PSI)	DROP (PSI)	REMARKS
PRV 1	BATH HOUSE_DOMESTIC COLD WATER	YARD	82	WATTS ACV 115-3	2 (2")	65	65	6	-
PRV 1	POOL BLDG._DOMESTIC COLD WATER	YARD	200	WATTS ACV 115-3	2 (3")	65	65	6	-

WATER HEATERS *

SYMBOL	SERVICE	LOCATION	TYPE	MANUFACTURER & MODEL	BTU INPUT	CAPACITY GALLONS	RECOVERY (GPH)	ELECTRICAL VOLT-HZ A.C	ELECTRICAL FLA	OPER. WEIGHT (LBS)	REMARKS
WH 1	DOMESTIC HOT WATER	JANITOR ROOM (112)	GAS WATER HEATER	A.O SMITH BTH-500(A)	499,999	119	576@ 100°F	120-60	5	1847	SCAQMD APPROVED, RULE 1146.2 LOW NOx. PROVIDE CPVC COMBUSTION AIR INTAKE AND FLUE VENT OF THE SIZES INDICATED ON THE DRAWINGS OR COMBINE THE COMBUSTION AIR INTAKE AND FLUE WHEN GOING THROUGH THE ROOF WITH A PREFABRICATED CONCENTRIC VENT FITTING. INSTALLED PER MANUFACUTURER INSTALLATION INSTRUCTIONS.
WH 2	DOMESTIC HOT WATER	JANITOR ROOM (113)	GAS WATER HEATER	A.O SMITH BTH-500(A)	499,999	119	576@ 100°F	120-60	5	1847	
WH 3	EMERGENCY FIXTURES	STORAGE (153)	GAS WATER HEATER	A.O SMITH BTH-250(A)	250,000	100	485@ 60°F	120-60	5	1386	

THERMOSTATIC MIXING VALVE *

SYMBOL	SERVICE	LOCATION	MANUFACTURER & MODEL	SIZE (INCH)	PRESSURE DROP (PSI)	GPM (MIN. - MAX.)	REMARKS
TMVA 1	DOMESTIC HOT WATER	JANITOR ROOM (112)	LEONARD TM-1520A-LF	1-1/4" (IN) 1-1/2" (OUT)	48 @ 5	1 - 50	WALL MOUNTED TMVA-1 SET TO DELIVER 115°F HW. ¾" INLETS, 1" OUTLET CHROME PLATED FURNISHED. EXPOSED ASSEMBLY WITH TEST CONNECTION PIPING OUTLET. * CP= CROME PLATED, TC= TEST CONNECTION
TMVA 2	DOMESTIC HOT WATER	JANITOR ROOM (113)	LEONARD TM-1520A-LF	1-1/4" (IN) 1-1/2" (OUT)	48 @ 5	1 - 50	
TMVA 3	TO EACH EMERGENCY FIXTURE MIXING VALVE	STORAGE (153)	LEONARD TM-1520A-LF	1-1/4" (IN) 1-1/2" (OUT)	48 @ 5	1 - 50	

CIRCULATING PUMPS *

SYMBOL	SYSTEM	LOCATION	TYPE	MANUFACTURER & MODEL	GPM	HEAD FT.	MOTOR HP	MOTOR VOLT/PH	MOTOR RPM	OPER. WEIGHT LBS.	REMARKS
CP 1	DOMESTIC HOT WATER RETURN	JANITOR ROOM (112)	INLINE CIRCULATING PUMP	GRUNDFOS UPS15-55SUC/TLC	15	18	1/8	115/1	3250	12	STAINLESS STEEL. SEAL MECHANICAL W/OIL LUBRICATED PUMP BEARING. PROVIDE WITH BUILT-IN OVERLOAD PROTECTION. START/STOP BY INTEGRAL 24HR/7 TIMER. ENABLE BY 7 DAY PROGRAMMABLE TIMER.
CP 2	DOMESTIC HOT WATER RETURN	JANITOR ROOM (113)	INLINE CIRCULATING PUMP	GRUNDFOS UPS15-55SUC/TLC	15	18	1/8	115/1	3250	12	
CP 3	DOMESTIC HOT WATER RETURN	STORAGE (153)	INLINE CIRCULATING PUMP	GRUNDFOS UPS15-55SUC/TLC	15	18	1/8	115/1	3250	12	

EXPANSION TANK *

SYMBOL	SERVICE	LOCATION	MANUFACTURER & MODEL	CAPACITY (GALLONS)	SIZE DIA x HEIGHT (IN)	SYSTEM VOLUME (GALLONS)	MAX. WORKING PRESSURE (PSIG)	OPER. WEIGHT (LBS)	REMARKS
ET 1	DOMESTIC HOT WATER	JANITOR ROOM (112)	AMTROL ST-12-C (ASME)	6.4	12 x 15-5/8	10	150	80	MOUNT TANK WITH UNI-STRUT CLAMP FOR SEISMIC SUPPORT
ET 2	DOMESTIC HOT WATER	JANITOR ROOM (113)	AMTROL ST-12-C (ASME)	6.4	12 x 15-5/8	10	150	80	
ET 3	DOMESTIC HOT WATER	STORAGE (153)	AMTROL ST-12-C (ASME)	6.4	12 x 15-5/8	10	150	80	

GAS REGULATOR *

TAG.	LOCATION	DESCRIPTION	SYSTEM	MAKE & TYPE	MODEL & SIZE	ORIFICE SIZE	CFH	TOTAL DEVELOPED LENGTH FROM METER TO REGULATOR	TOTAL DEVELOPED LENGTH FROM REGULATOR TO OUTLET	REFERENCE RELEVANT DETAIL	REMARKS
GR 1	OUTSIDE OF THE POOL EQUIPMENT BLDG.	GAS REGULATOR	POOL WATER HEATERS	PRESSURE-REDUCING SELF-OPERATED	FISHER S201	1"	3,482	5'	80'	2/P4.10	3" OUT, 2 PSI IN 10.5" WC OUT, 2" BODY SIZE
GR 2	OUTSIDE OF BATHHOUSE	GAS REGULATOR	DOMESTIC WATER HEATERS	PRESSURE-REDUCING SELF-OPERATED	FISHER S201	1/2"	1,160	200'	250'	2/P4.10	3" OUT, 2 PSI IN 10.5" WC OUT, 2" BODY SIZE

* INSTALL THE SCHEDULED EQUIPMENT PER MANUFACTURER'S PUBLISHED INSTALLATION INSTRUCTIONS. PROVIDE ALL ACCESSORIES REQUIRED FOR PROPER OPERATION PER CODE AS REQUIRED BY MANUFACTURER. OMISSION OF MINOR DETAILS SHALL NOT RELIEVE THE CONTRACTOR FROM THE PROVISION OF REQUIRED ACCESSORIES OR COMPONENTS.

THE CITY OF LOS ANGELES OR ITS OFFICERS OR AGENTS SHALL NOT BE RESPONSIBLE FOR THE ACCURACY OR COMPLETENESS OF ELECTRONIC COPIES OF THIS PLAN SHEET.

FILE PATH:
SHEET ISSUE DATE: 15 JULY 2020
REVISION DATES (DESIGN STAGE ONLY):

ENGINEERING
CITY OF LOS ANGELES
DEPARTMENT OF PUBLIC WORKS
BUREAU OF ENGINEERING

NO. | REVISION DESCRIPTION | DATE | BY

BUILDING NO. -
INDEX NO. RP-300118

GARY LEE MOORE, PE, ENV SP
CITY ENGINEER
ARCHITECTURAL DIVISION
ARCHITECT/ENGINEER: JAMES H. SHWE LIC. NO.: M26903
DESIGNED BY: MAROKO & SHWE, INC.
DRAWN BY: S.C
CHECKED BY: J.S
APPROVED BY:
DATE: 07/15/20

PROFESSIONAL ENGINEER * JAMES H. SHWE * No. 26903 * Renewal: 9/30/2021 * CIVIL * STATE OF CALIFORNIA

BUREAU OF ENGINEERING
OFFICIAL RECORD

VERTICAL CONTROL:
HORIZONTAL CONTROL:
SHEET TITLE: SCHEDULES

PROJECT: GRANADA HILLS POOL AND BATHHOUSE REPLACEMENT PROJECT
ADDRESS: 16730 CHATSWORTH STREET GRANADA HILLS, CA 91344

BID SET
PROJECT ISSUE DATE: 06/22/21

WORK ORDER NO. #E170517
PLAN FILE NO. -
DRAWING NO. P0.12
SHEET 0 OF SHEETS - - -

PLOTTED:

Electronic file distribution fee required



2 **EXISTING GAS METER**
SCALE: NOT TO SCALE

CHATSWORTH ST.

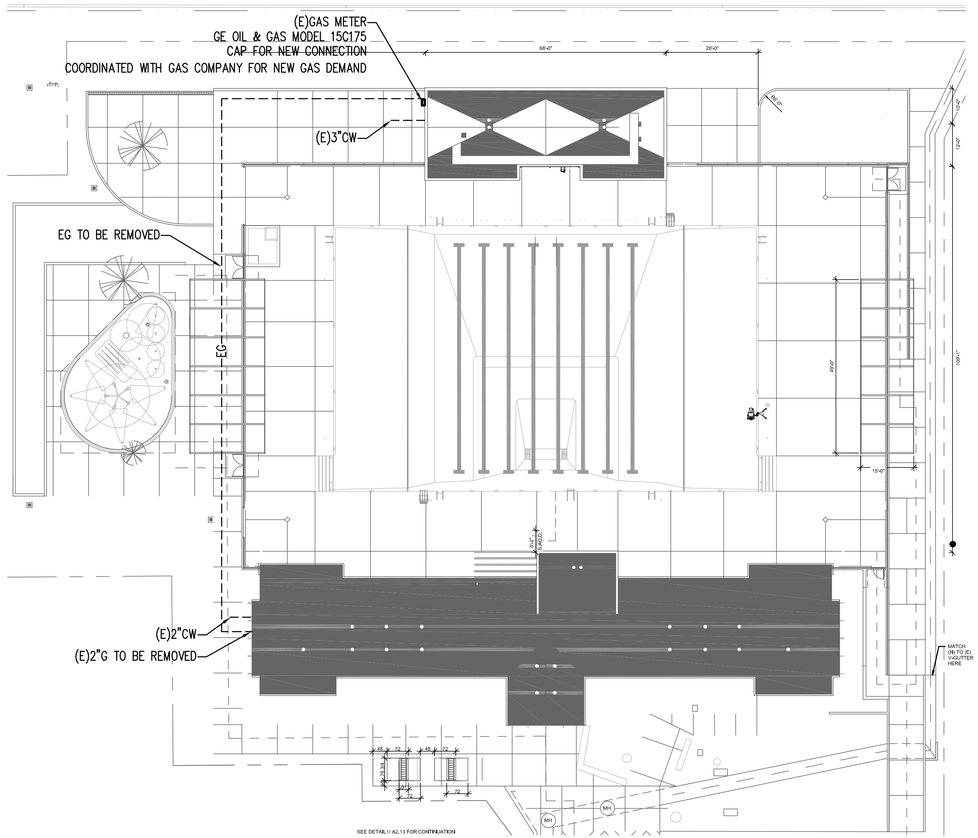

1 **PLUMBING SITE PLAN**
SCALE: 1" = 20'-0"

BUREAU OF ENGINEERING
OFFICIAL RECORD

THE CITY OF LOS ANGELES OR ITS OFFICERS OR AGENTS SHALL NOT BE RESPONSIBLE FOR THE ACCURACY OR COMPLETENESS OF ELECTRONIC COPIES OF THIS PLAN SHEET.

SHEET ISSUE DATE: 15 JULY 2020 FILE PATH:

REVISION DATES (DESIGN STAGE ONLY)

DEPARTMENT OF PUBLIC WORKS
CITY OF LOS ANGELES
BUREAU OF ENGINEERING

ENGINEERING
CITY OF LOS ANGELES

NO.	REVISION DESCRIPTION	DATE	BY

INDEX NO. RP-300118
BUILDING NO. -

REGISTERED PROFESSIONAL ENGINEER JAMES H. SHWE No. 26903 Expires: 9/30/21 CIVIL

BID SET
PROJECT ISSUE DATE: 06/22/21

VERTICAL CONTROL:
HORIZONTAL CONTROL:

SHEET TITLE: PLUMBING SITE DEMOLITION PLAN

PROJECT: GRANADA HILLS POOL AND BATHHOUSE REPLACEMENT PROJECT

ADDRESS: 16730 CHATSWORTH STREET GRANADA HILLS, CA 91344

GARY LEE MOORE, PE, ENV SP	CITY ENGINEER:	
ARCHITECTURAL DIVISION	DATE:	
ARCHITECT/ENGINEER: JAMES H. SHWE	LIC. NO.: M26903	07/15/20
DESIGNED BY: MARCKO & SHWE, INC.		07/15/20
DRAWN BY:		07/15/20
CHECKED BY: JS		07/15/20
APPROVED BY:		07/15/20

WORK ORDER NO. #E170517
PLAN FILE NO.
DRAWING NO. PSD1.01
SHEET - OF SHEETS -

PLOTTED:

D:\TEMP\AcPublish_5744\Granada Hills Pool Replacement Project.dwg

THE CITY OF LOS ANGELES OR ITS OFFICERS OR AGENTS SHALL NOT BE RESPONSIBLE FOR THE ACCURACY OR COMPLETENESS OF ELECTRONIC COPIES OF THIS PLAN SHEET.

CHATSWORTH ST.

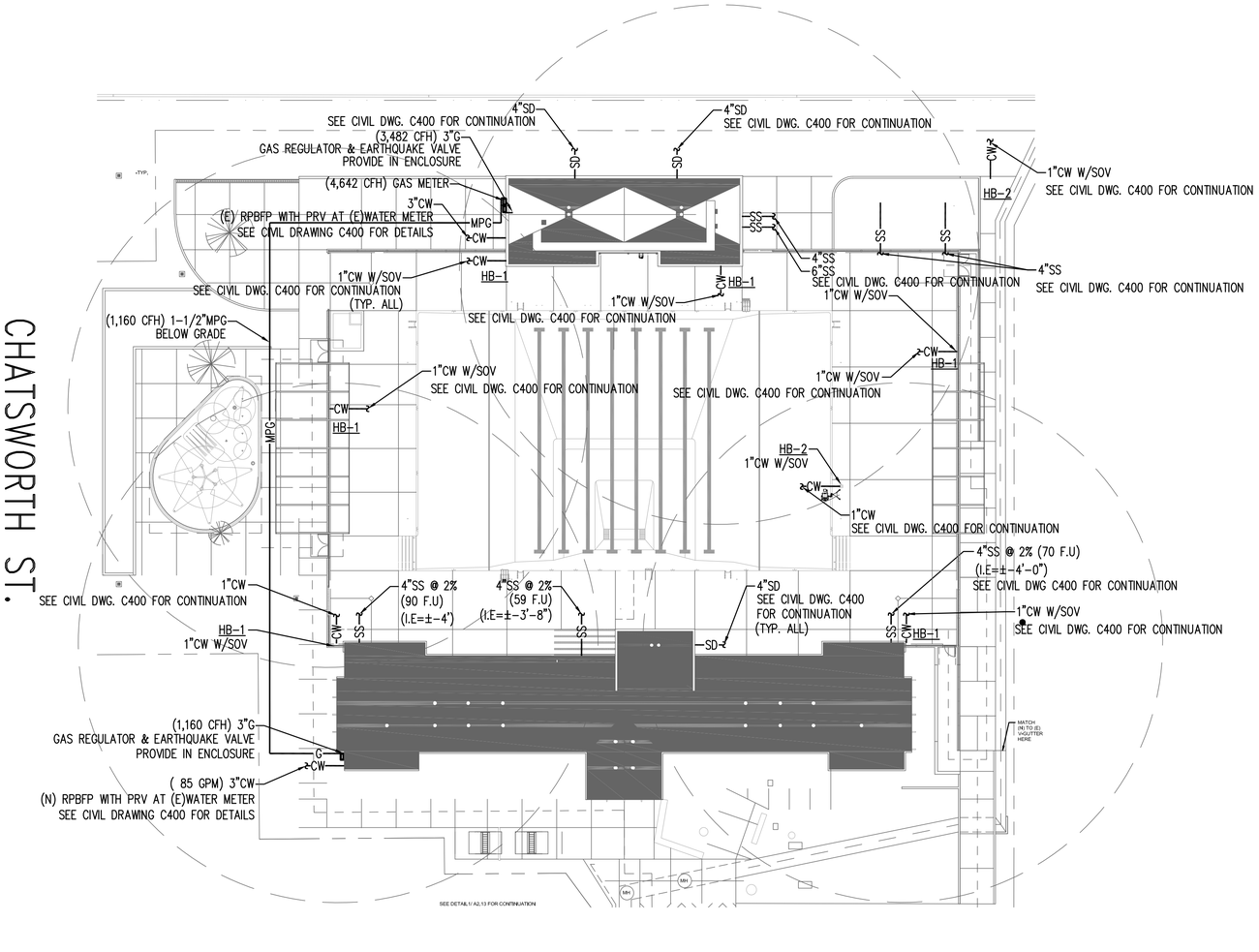

1 PLUMBING SITE PLAN

SCALE: 1" = 20'-0"

BUREAU OF ENGINEERING
OFFICIAL RECORD

SHEET ISSUE DATE: 15 JULY 2020

FILE PATH:

REVISION DATES (DESIGN STAGE ONLY)

BID SET
PROJECT ISSUE DATE: 06/22/21

CITY OF LOS ANGELES
DEPARTMENT OF PUBLIC WORKS
BUREAU OF ENGINEERING

ENGINEERING
CITY OF LOS ANGELES

NO.	REVISION DESCRIPTION	DATE	BY

BUILDING NO. -

INDEX NO. RP-300118

CITY ENGINEER

	DATE:
GARY LEE MOORE, PE, ENV SP	07/15/20
ARCHITECTURAL DIVISION	
ARCHITECT/ENGINEER: JAMES H. SHWE LIC. NO.: M26903	07/15/20
DESIGNED BY: MAROKO & SHWE, INC.	07/15/20
DRAWN BY: S.C	
CHECKED BY: J.S	07/15/20
APPROVED BY:	07/15/20

VERTICAL CONTROL:
HORIZONTAL CONTROL:

SHEET TITLE: SITE PLAN

PROJECT: GRANADA HILLS POOL AND BATHHOUSE REPLACEMENT PROJECT

ADDRESS: 16730 CHATSWORTH STREET GRANADA HILLS, CA 91344

WORK ORDER NO. #E170517

PLAN FILE NO.

DRAWING NO. PS1.01

SHEET - OF -

SHEETS -

PLOTTED:

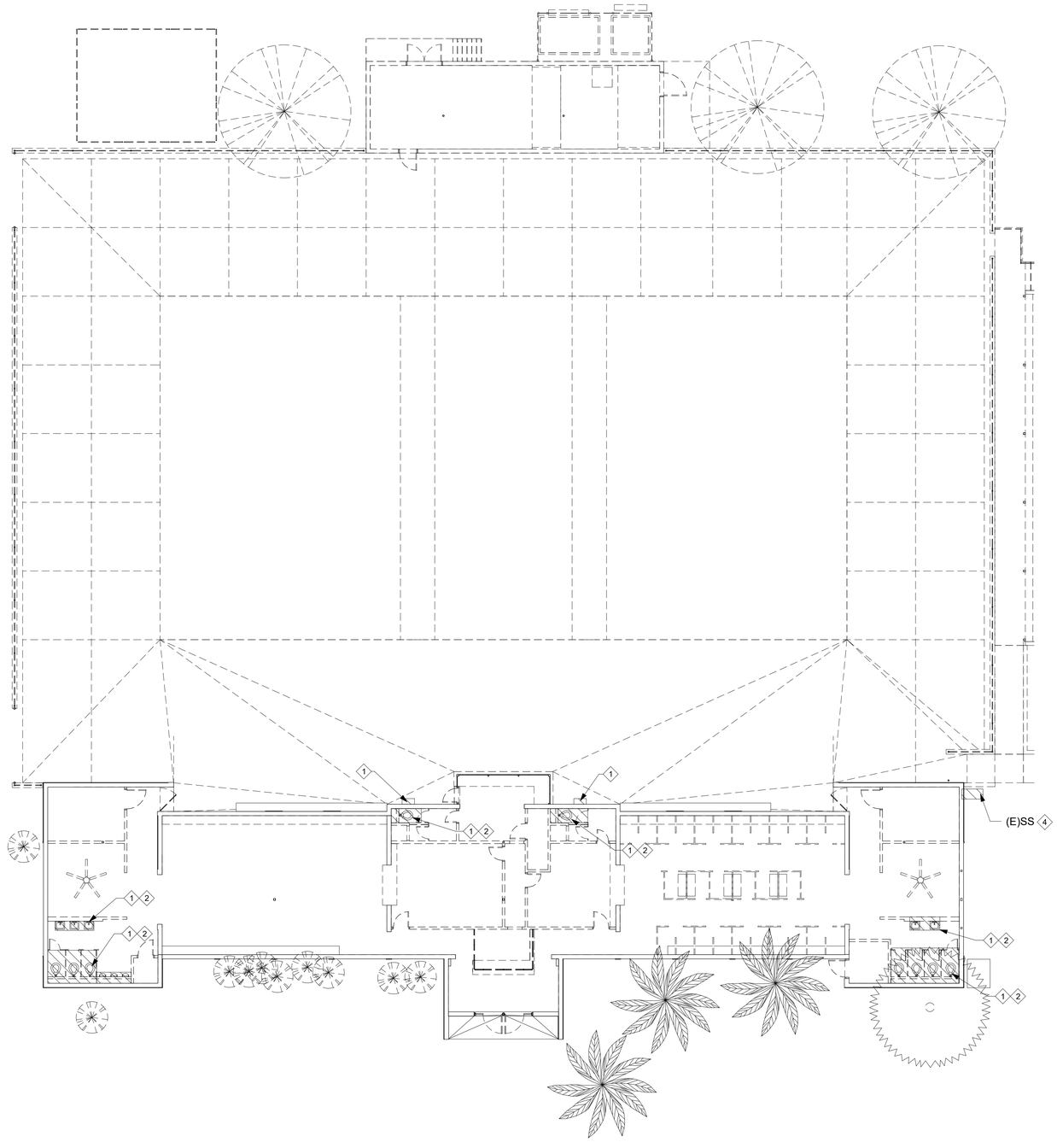

1 DEMOLITION PLAN
Scale: 3/32"=1'-0"

NOTES:
- DISCONNECT AND REMOVE ALL (E) FIXTURE AND TRIM.
- REMOVE ALL (E) DOMESTIC WATER PIPING.
- REMOVE ALL (E) PLUMBING LINES IN THE POOL DECK AND BATHHOUSE SLAB

1. (E) PLUMBING FIXTURE(S) TO BE REMOVED
2. REMOVE ASSOCIATED (E) PLUMBING PIPING, EXACT LOCATION VERIFY IN FIELD
3. REMOVE (E)WATER HEATER AND ASSOCIATED PIPING, EXACT LOCATION VERIFY IN FIELD
4. REMOVE (E)PLUMBING PIPING BELOW GRADE

THE CITY OF LOS ANGELES OR ITS OFFICERS OR AGENTS SHALL NOT BE RESPONSIBLE FOR THE ACCURACY OR COMPLETENESS OF ELECTRONIC COPIES OF THIS PLAN SHEET.

TTLB TEMPLATE REVISION DATE: 02/2013
SHEET ISSUE DATE: 01/30/18
FILE PATH: BIM 360://Granada Hills Pool Renovation/P_Granada-Hills_2017-msl.rvt

REVISION DATES (DESIGN STAGE ONLY)

BUREAU OF ENGINEERING
CITY OF LOS ANGELES

NO.	REVISION DESCRIPTION	DATE	BY

BUILDING NO. -
INDEX NO. RP-300118

REGISTERED PROFESSIONAL ENGINEER JAMES H. SHWE No. 26903 (Renewal 9/30/20) MECHANICAL STATE OF CALIFORNIA

DEPARTMENT OF PUBLIC WORKS
CITY OF LOS ANGELES

GARY LEE MOORE, PE, ENV SP — CITY ENGINEER — DATE: 07/15/20

ARCHITECTURAL DIVISION

ARCHITECT/ENGINEER: JAMES H. SHWE LIC. NO.: M26903
DESIGNED BY: MAROKO & SHWE, INC.
DRAWN BY: E.N, R.N
CHECKED BY: J.S
APPROVED BY: Approver

BID SET
PROJECT ISSUE DATE: 06/22/21

VERTICAL CONTROL:
HORIZONTAL CONTROL:

SHEET TITLE: DEMOLITION FLOOR PLANS

PROJECT: GRANADA HILLS POOL AND BATHHOUSE REPLACEMENT PROJECT
ADDRESS: 16730 CHATSWORTH STREET GRANADA HILLS, CA 91344

BUREAU OF ENGINEERING OFFICIAL RECORD

WORK ORDER NO. #E170517
PLAN FILE NO.
DRAWING NO. P2.00
SHEET 0 OF SHEETS

PLOTTED:7/16/2020 1:39:56 PM

SHEET NOTES:

- SEE SITE PLAN PS1.01 FOR HOSE BIBB LOCATION & CONNECTION

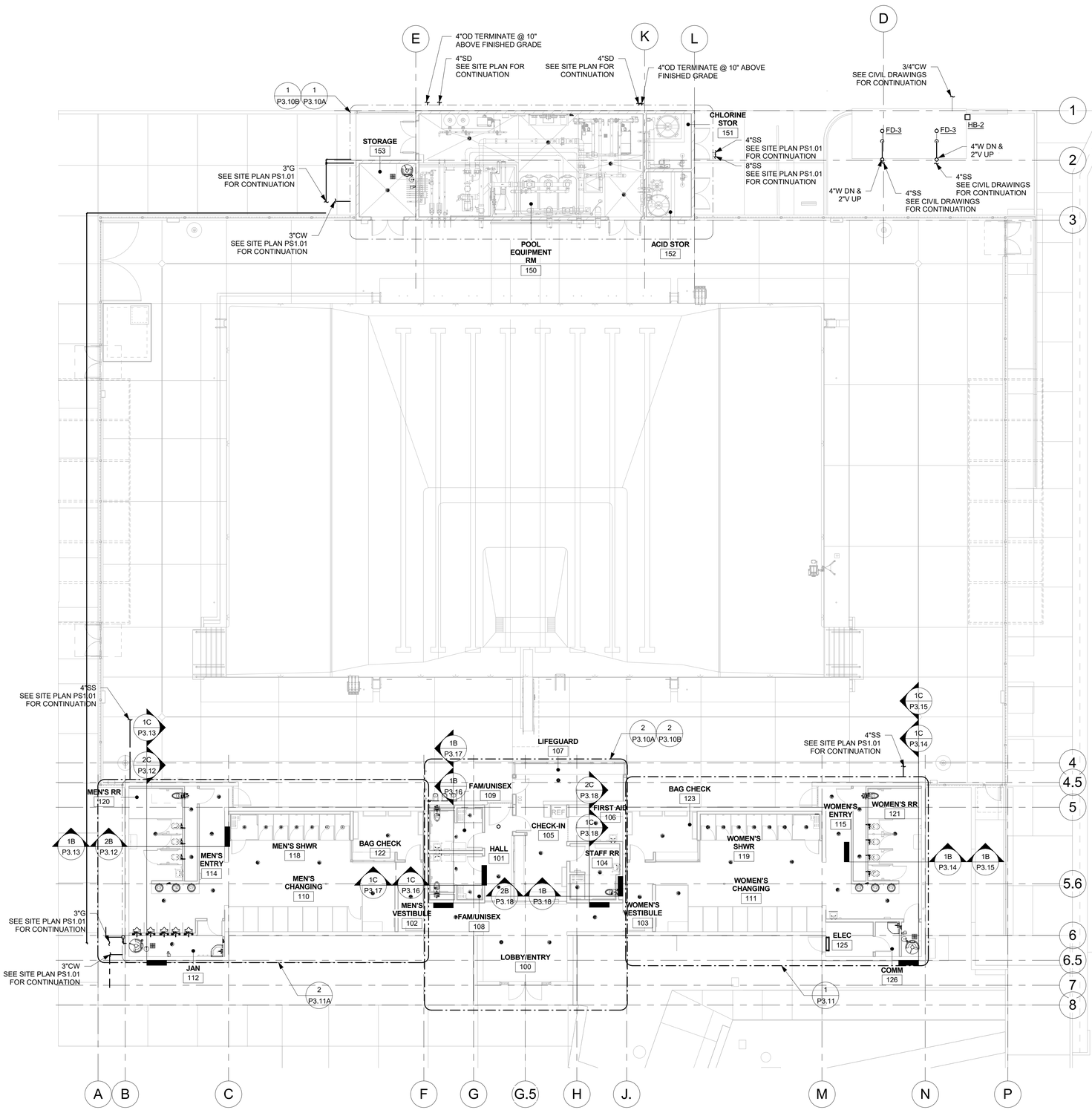

1 FACILITY FLOOR PLAN

Scale: 3/32"=1'-0"

THE CITY OF LOS ANGELES OR ITS OFFICERS OR AGENTS SHALL NOT BE RESPONSIBLE FOR THE ACCURACY OR COMPLETENESS OF ELECTRONIC COPIES OF THIS PLAN SHEET.

TTLB TEMPLATE REVISION DATE: 02/2013
SHEET ISSUE DATE: 01/30/18
FILE PATH: BIM 360://Granada Hills Pool Renovation/P_Granada-Hills_2017-msi.rvt

REVISION DATES (DESIGN STAGE ONLY)

BUREAU OF ENGINEERING
ENGINEERING
CITY OF LOS ANGELES

NO.	REVISION DESCRIPTION	DATE	BY

BUILDING NO. -

INDEX NO. RP-300118

PROFESSIONAL ENGINEER ★ JAMES H. SHWE ★ No. 26903 (Renewal 9/30/20) ★ REGISTERED ★ MECHANICAL ★ STATE OF CALIFORNIA

DEPARTMENT OF PUBLIC WORKS
CITY OF LOS ANGELES

GARY LEE MOORE, PE, ENV SP
CITY ENGINEER
DATE: 07/15/20

ARCHITECTURAL DIVISION
ARCHITECT/ENGINEER: JAMES H. SHWE LIC. NO.: M26903 — 07/15/20
DESIGNED BY: MAROKO & SHWE, INC. — 07/15/20
DRAWN BY: E.N, R.N — 07/15/20
CHECKED BY: J.S — 07/15/20
APPROVED BY: Approver

BID SET
PROJECT ISSUE DATE: 06/22/21

VERTICAL CONTROL:
HORIZONTAL CONTROL:

SHEET TITLE: FACILITY FLOOR PLAN

PROJECT: GRANADA HILLS POOL AND BATHHOUSE REPLACEMENT PROJECT

ADDRESS: 16730 CHATSWORTH STREET GRANADA HILLS, CA 91344

BUREAU OF ENGINEERING OFFICIAL RECORD

WORK ORDER NO. #E170517

PLAN FILE NO.

DRAWING NO. P2.10

SHEET 0 OF SHEETS

PLOTTED:7/16/2020 1:41:47 PM

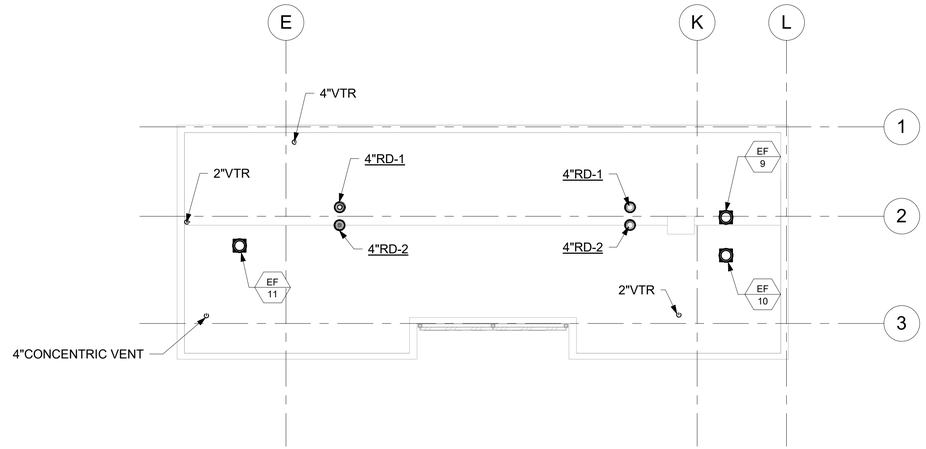

2 POOL EQUIP. BLDG ROOF PLAN

Scale: 1/8"=1'-0"

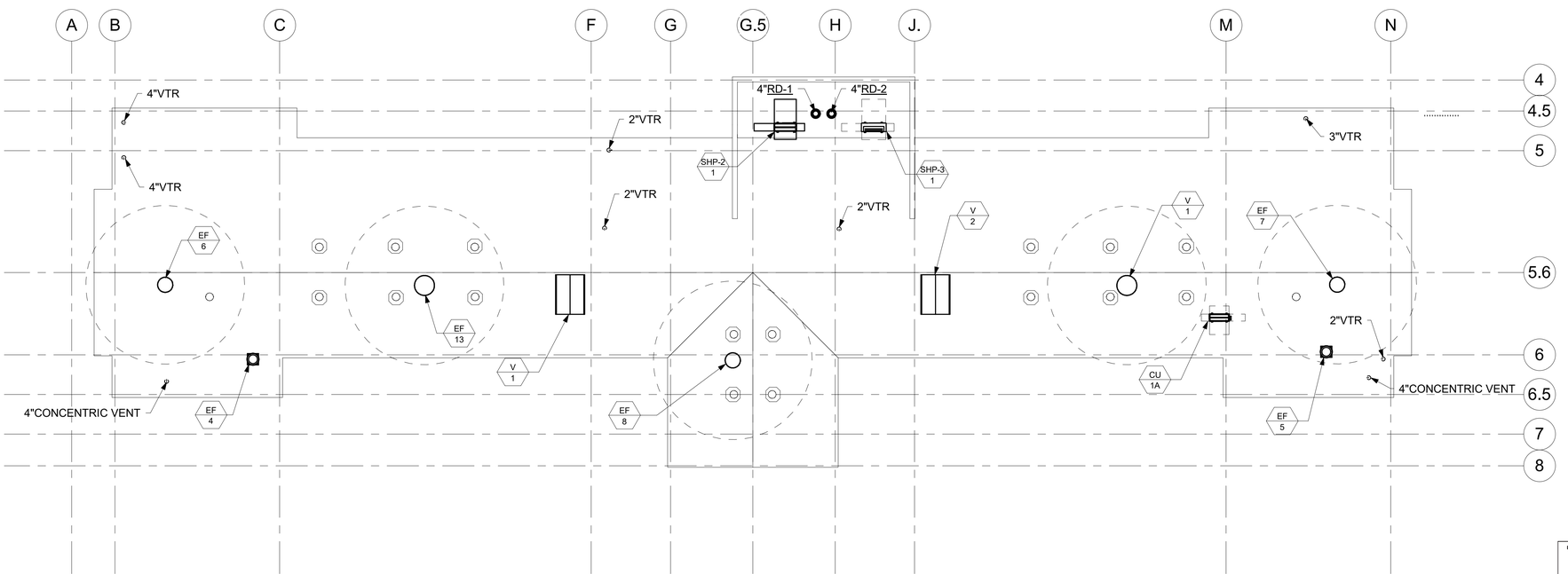

1 BATHHOUSE ROOF PLAN

Scale: 1/8"=1'-0"

BUREAU OF ENGINEERING
OFFICIAL RECORD

THE CITY OF LOS ANGELES OR ITS OFFICERS OR AGENTS SHALL NOT BE RESPONSIBLE FOR THE ACCURACY OR COMPLETENESS OF ELECTRONIC COPIES OF THIS PLAN SHEET.

TTLB TEMPLATE REVISION DATE: 02/2013
SHEET ISSUE DATE: 01/30/18
FILE PATH: BIM 360://Granada Hills Pool Renovation/P_Granada-Hills_2017-msl.rvt

REVISION DATES (DESIGN STAGE ONLY)

DEPARTMENT OF PUBLIC WORKS
BUREAU OF ENGINEERING
ENGINEERING
CITY OF LOS ANGELES

NO.	REVISION DESCRIPTION	DATE	BY

BUILDING NO. -

INDEX NO. RP-300118

REGISTERED PROFESSIONAL ENGINEER
H. SHWE
No. 26903
(Retired 9/30/20)
MECHANICAL
STATE OF CALIFORNIA

DEPARTMENT OF PUBLIC WORKS
GARY LEE MOORE, PE, ENV SP
CITY ENGINEER
DATE: 07/15/20

ARCHITECTURAL DIVISION
ARCHITECT/ENGINEER: JAMES H. SHWE LIC. NO.: M26903
DESIGNED BY: MAROKO & SHWE, INC.
DRAWN BY: E.N, R.N
CHECKED BY: J.S
APPROVED BY: Approver

CITY OF LOS ANGELES
BID SET
PROJECT ISSUE DATE: 06/22/21

VERTICAL CONTROL:
HORIZONTAL CONTROL:

SHEET TITLE: ROOF PLANS

PROJECT: GRANADA HILLS POOL AND BATHHOUSE REPLACEMENT PROJECT

ADDRESS: 16730 CHATSWORTH STREET GRANADA HILLS, CA 91344

WORK ORDER NO. #E170517
PLAN FILE NO.
DRAWING NO. P2.11
SHEET 0 OF SHEETS

PLOTTED:7/16/2020 1:42:34 PM

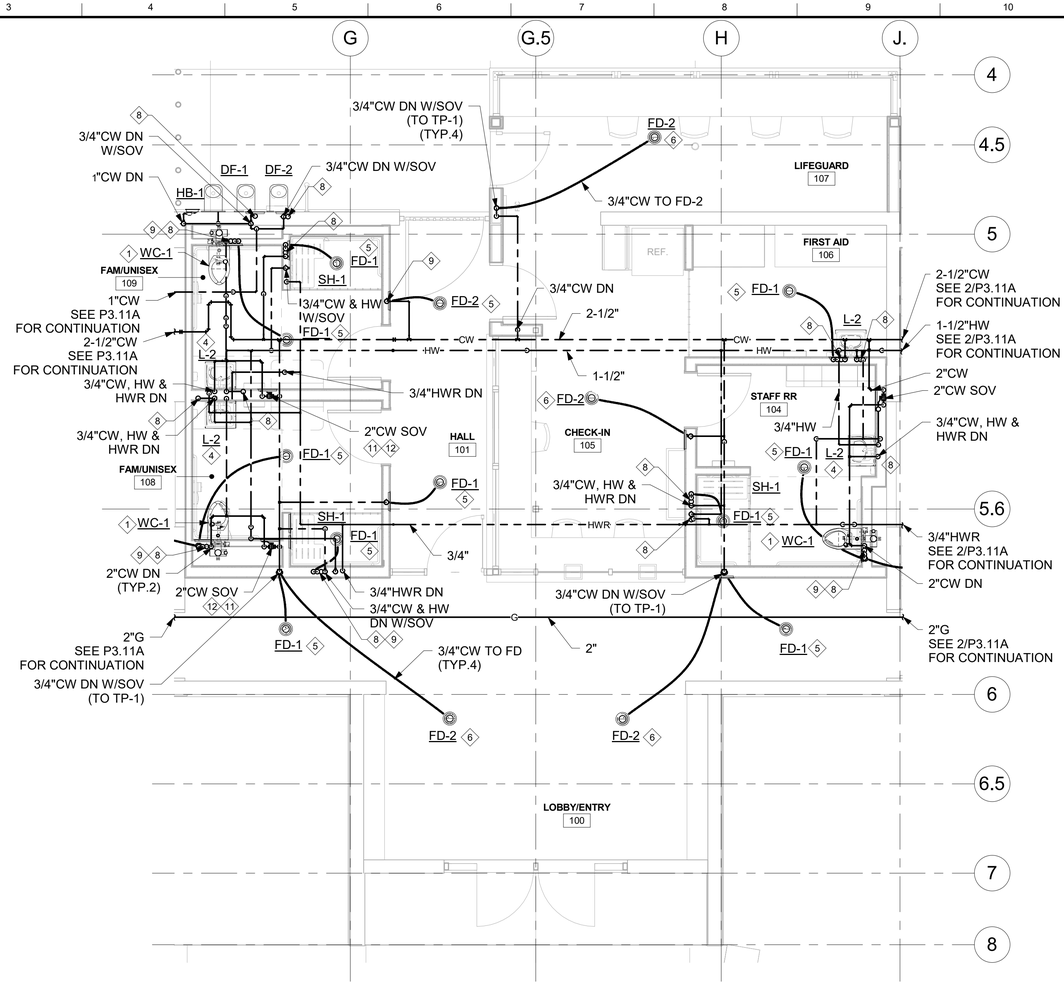

2 BATHHOUSE ADMIN PLAN

Scale: 1/4"=1'-0"

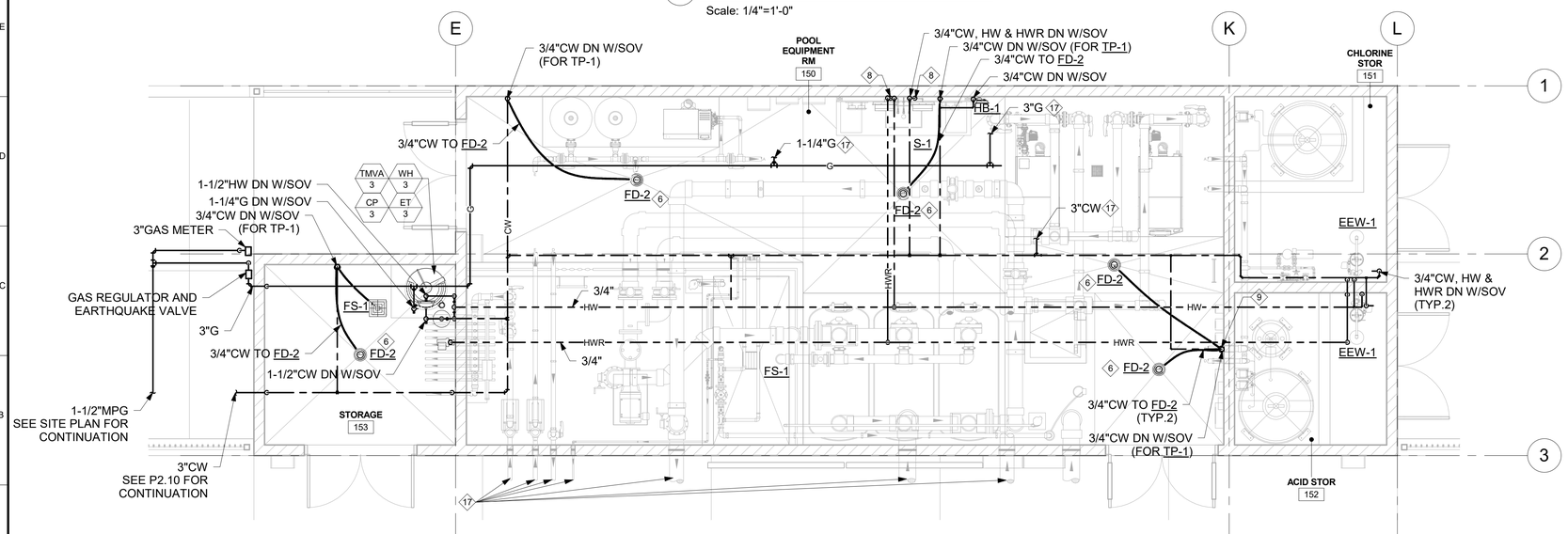

1 POOL EQUIP BLDG PLAN

Scale: 1/4"=1'-0"

NOTES:

- TRAP PRIMERS SERVING MORE THAN ONE FIXTURE SHALL BE PROVIDED WITH A DISTRIBUTION UNIT AND A SEPERATE LINE SHALL BE PROVIDED TO EACH FIXTURE FROM THE TRAP PRIMER.
- DOMESTIC WATER PIPING TO EACH FIXTURE SHALL BE RUN INDIVIDUALLY FROM EACH BRANCH. DO NOT RUN HORIZONTALLY BETWEEN THE STUDS FROM FIXTURE TO FIXTURE. SEE RISER DIAGRAM FOR PIPE SIZES.

1. 2"V, 4"W AND 2"CW
2. 1-1/2"V, 2"W AND 2"CW
3. 1-1/2"V, 2"W AND 3/4"CW
4. 1-1/2"V, 3"W, 3/4"CW AND HW
5. 1-1/2"V, 2"W AND 3/4"ATP
6. 2"V, 4"W AND 3/4"ATP
7. 3/4"CW
8. WHA-1 BEHIND ACCESS PANEL
9. ATP-1 BEHIND ACCESS PANEL
10. DN AND CONNECTION TO FIXTURES
11. ZONE OR FLOOR SOV BEHIND ACCESS PANEL
12. SOV BEHIND ACCESS PANEL (5-7 FEET ABOVE FINISHED FLOOR, INSIDE A MIN. 6"PLUMBING WALL
13. CD DN CONNECT TO SINK TAILPIECE, SEE FOR DETAILS
14. CD DN AND SPILL INTO SERVICE SINK
15. PROVIDE 8" PLUMBING WALL
16. PROVIDE 14" PLUMBING WALL
17. SEE AQUATIC DWG. MR-1 FOR CONTINUATION

BUREAU OF ENGINEERING

ENGINEERING
CITY OF LOS ANGELES

NO.	REVISION DESCRIPTION	DATE	BY

BUILDING NO. -

INDEX NO. RP-300118

REGISTERED PROFESSIONAL ENGINEER JAMES H. SHWE No. 26903 (Renewal 9/30/20) MECHANICAL STATE OF CALIFORNIA

DEPARTMENT OF PUBLIC WORKS
CITY OF LOS ANGELES

GARY LEE MOORE, PE, ENV SP
CITY ENGINEER

		DATE:
ARCHITECTURAL DIVISION		
ARCHITECT/ENGINEER:	JAMES H. SHWE	LIC. NO.: M26903
DESIGNED BY:	MAROKO & SHWE, INC.	07/15/20
DRAWN BY:	E.N, R.N	07/15/20
CHECKED BY:	J.S	07/15/20
APPROVED BY:	Approver	07/15/20

SHEET TITLE: ENLARGED FLOOR PLANS (WATER AND GAS)

PROJECT: GRANADA HILLS POOL AND BATHHOUSE REPLACEMENT PROJECT

ADDRESS: 16730 CHATSWORTH STREET GRANADA HILLS, CA 91344

BUREAU OF ENGINEERING OFFICIAL RECORD

VERTICAL CONTROL:
HORIZONTAL CONTROL:

BID SET
PROJECT ISSUE DATE: 06/22/21

WORK ORDER NO. #E170517
PLAN FILE NO.
DRAWING NO. P3.10A
SHEET 0 OF SHEETS

PLOTTED:7/16/2020 1:43:12 PM

THE CITY OF LOS ANGELES OR ITS OFFICERS OR AGENTS SHALL NOT BE RESPONSIBLE FOR THE ACCURACY OR COMPLETENESS OF ELECTRONIC COPIES OF THIS PLAN SHEET.

TTLB TEMPLATE REVISION DATE: 02/2013
SHEET ISSUE DATE: 02/07/18
FILE PATH: BIM 360://Granada Hills Pool Renovation/P_Granada-Hills_2017-msl.rvt

REVISION DATES (DESIGN STAGE ONLY)

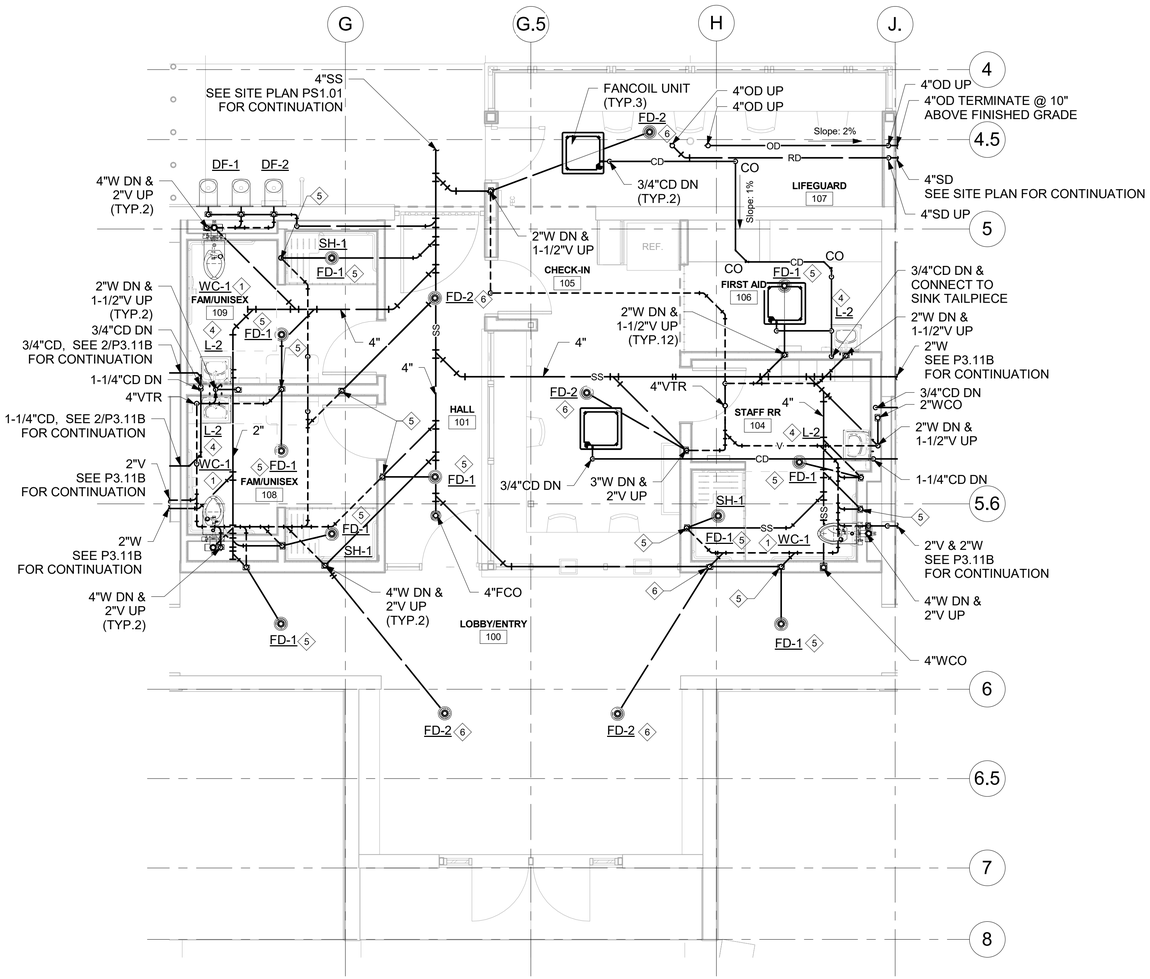

2 BATHHOUSE ADMIN PLAN

Scale: 1/4"=1'-0"

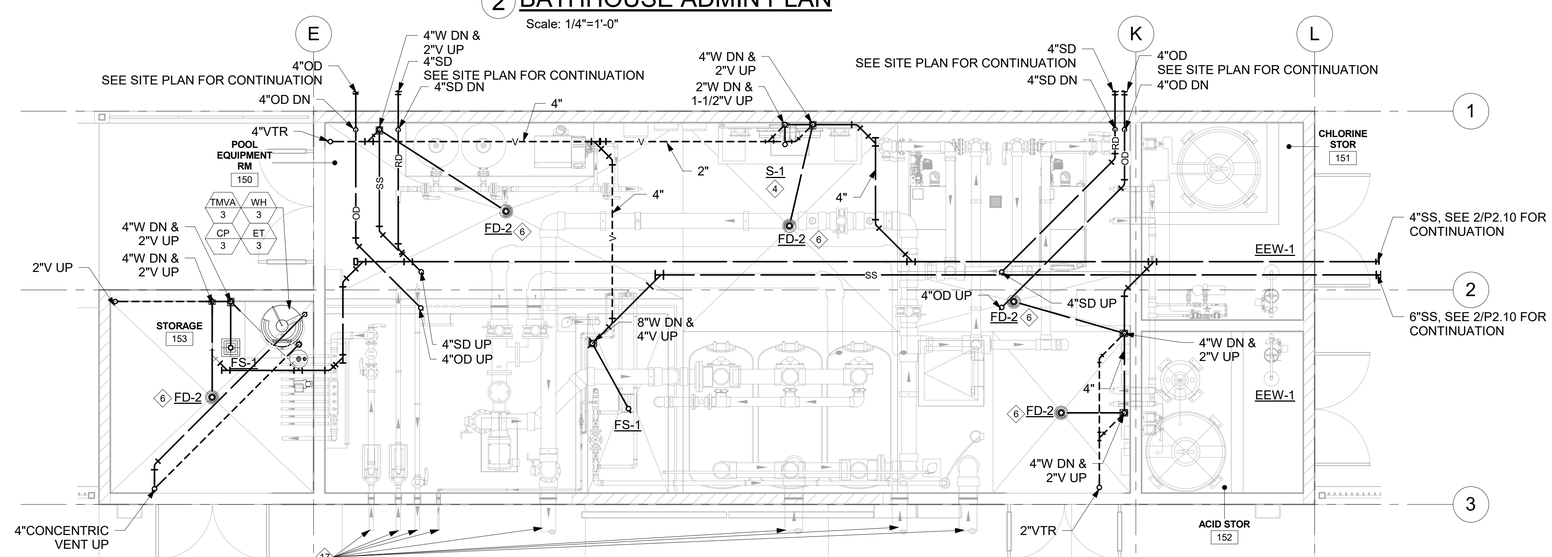

1 POOL EQUIP BLDG PLAN

Scale: 1/4"=1'-0"

NOTES:

- TRAP PRIMERS SERVING MORE THAN ONE FIXTURE SHALL BE PROVIDED WITH A DISTRIBUTION UNIT AND A SEPERATE LINE SHALL BE PROVIDED TO EACH FIXTURE FROM THE TRAP PRIMER.
- DOMESTIC WATER PIPING TO EACH FIXTURE SHALL BE RUN INDIVIDUALLY FROM EACH BRANCH. DO NOT RUN HORIZONTALLY BETWEEN THE STUDS FROM FIXTURE TO FIXTURE. SEE RISER DIAGRAM FOR PIPE SIZES.

1. 2"V, 4"W AND 2"CW
2. 1-1/2"V, 2"W AND 2"CW
3. 1-1/2"V, 2"W AND 3/4"CW
4. 1-1/2"V, 3"W, 3/4"CW AND HW
5. 1-1/2"V, 2"W AND 3/4"ATP
6. 2"V, 4"W AND 3/4"ATP
7. 3/4"CW
8. WHA-1 BEHIND ACCESS PANEL
9. ATP-1 BEHIND ACCESS PANEL
10. DN AND CONNECTION TO FIXTURES
11. ZONE OR FLOOR SOV BEHIND ACCESS PANEL
12. SOV BEHIND ACCESS PANEL (5-7 FEET ABOVE FINISHED FLOOR, INSIDE A MIN. 6"PLUMBING WALL
13. CD DN CONNECT TO SINK TAILPIECE, SEE FOR DETAILS
14. CD DN AND SPILL INTO SERVICE SINK
15. PROVIDE 8" PLUMBING WALL
16. PROVIDE 14" PLUMBING WALL
17. SEE AQUATIC DWG. MR-1 FOR CONTINUATION

ENGINEERING
CITY OF LOS ANGELES

BUREAU OF ENGINEERING

NO.	REVISION DESCRIPTION	DATE	BY

BUILDING NO. -

INDEX NO. RP-300118

REGISTERED PROFESSIONAL ENGINEER JAMES H. SHWE No. 26903 (Retired 9/30/20) MECHANICAL STATE OF CALIFORNIA

DEPARTMENT OF PUBLIC WORKS
CITY OF LOS ANGELES

GARY LEE MOORE, PE, ENV SP
CITY ENGINEER

	DATE:
ARCHITECTURAL DIVISION	
ARCHITECT/ENGINEER: JAMES H. SHWE LIC. NO.: M26903	07/15/20
DESIGNED BY: MAROKO & SHWE, INC.	07/15/20
DRAWN BY: E.N., R.N	07/15/20
CHECKED BY: J.S	07/15/20
APPROVED BY: Approver	

BUREAU OF ENGINEERING
OFFICIAL RECORD

BID SET
PROJECT ISSUE DATE: 06/22/21

VERTICAL CONTROL:
HORIZONTAL CONTROL:

SHEET TITLE: ENLARGED FLOOR PLANS (WASTE AND VENT)

PROJECT: GRANADA HILLS POOL AND BATHHOUSE REPLACEMENT PROJECT

ADDRESS: 16730 CHATSWORTH STREET GRANADA HILLS, CA 91344

WORK ORDER NO. #E170517

PLAN FILE NO.

DRAWING NO. P3.10B

SHEET 0 OF SHEETS

PLOTTED:7/16/2020 1:44:08 PM

REVISION DATES (DESIGN STAGE ONLY)

TTLB TEMPLATE REVISION DATE: 02/2013
SHEET ISSUE DATE: 12/11/18
FILE PATH: BIM 360://Granada Hills Pool Renovation/P_Granada-Hills_2017-msl.rvt

THE CITY OF LOS ANGELES OR ITS OFFICERS OR AGENTS SHALL NOT BE RESPONSIBLE FOR THE ACCURACY OR COMPLETENESS OF ELECTRONIC COPIES OF THIS PLAN SHEET.

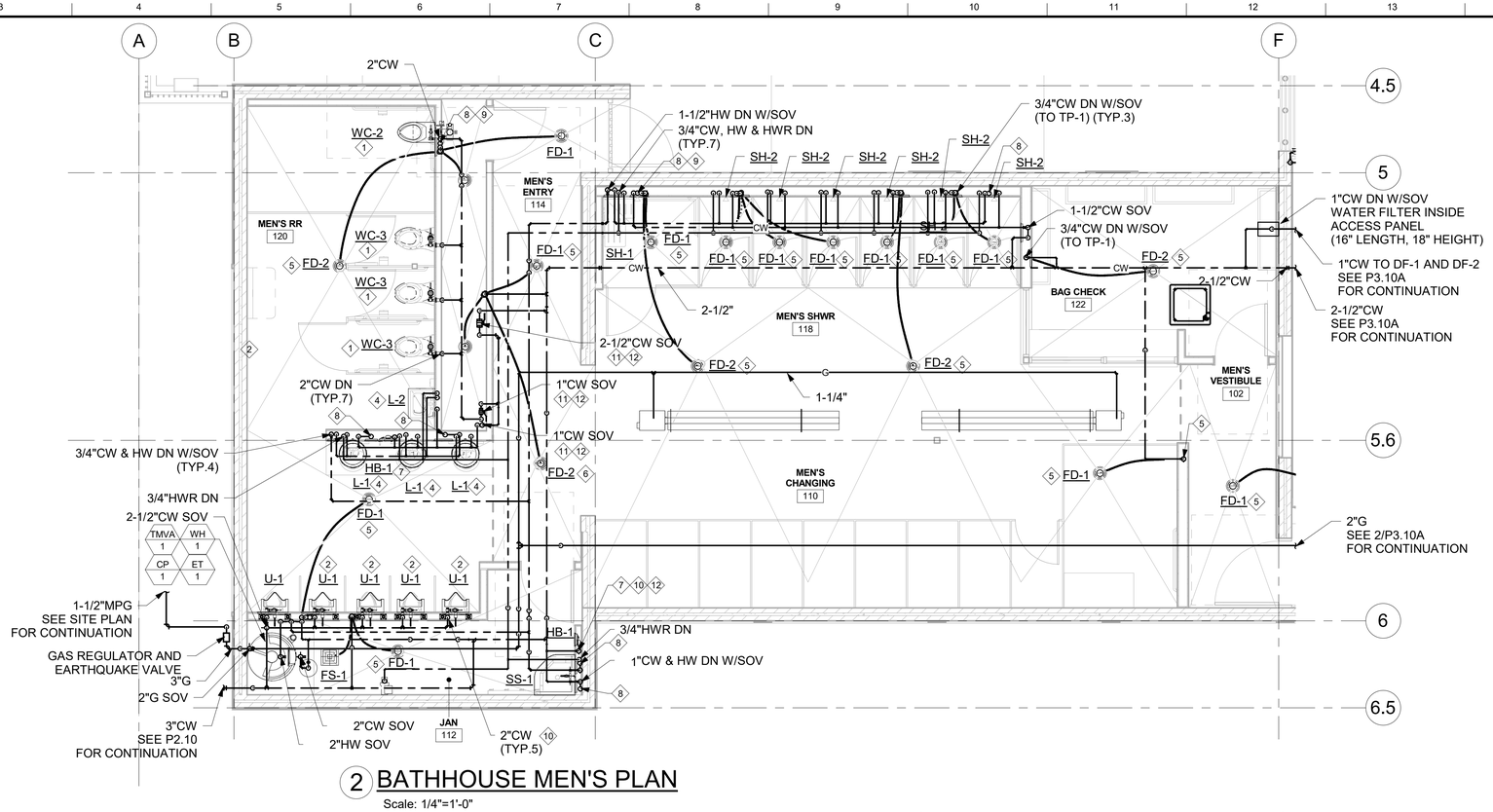

2 BATHHOUSE MEN'S PLAN

Scale: 1/4"=1'-0"

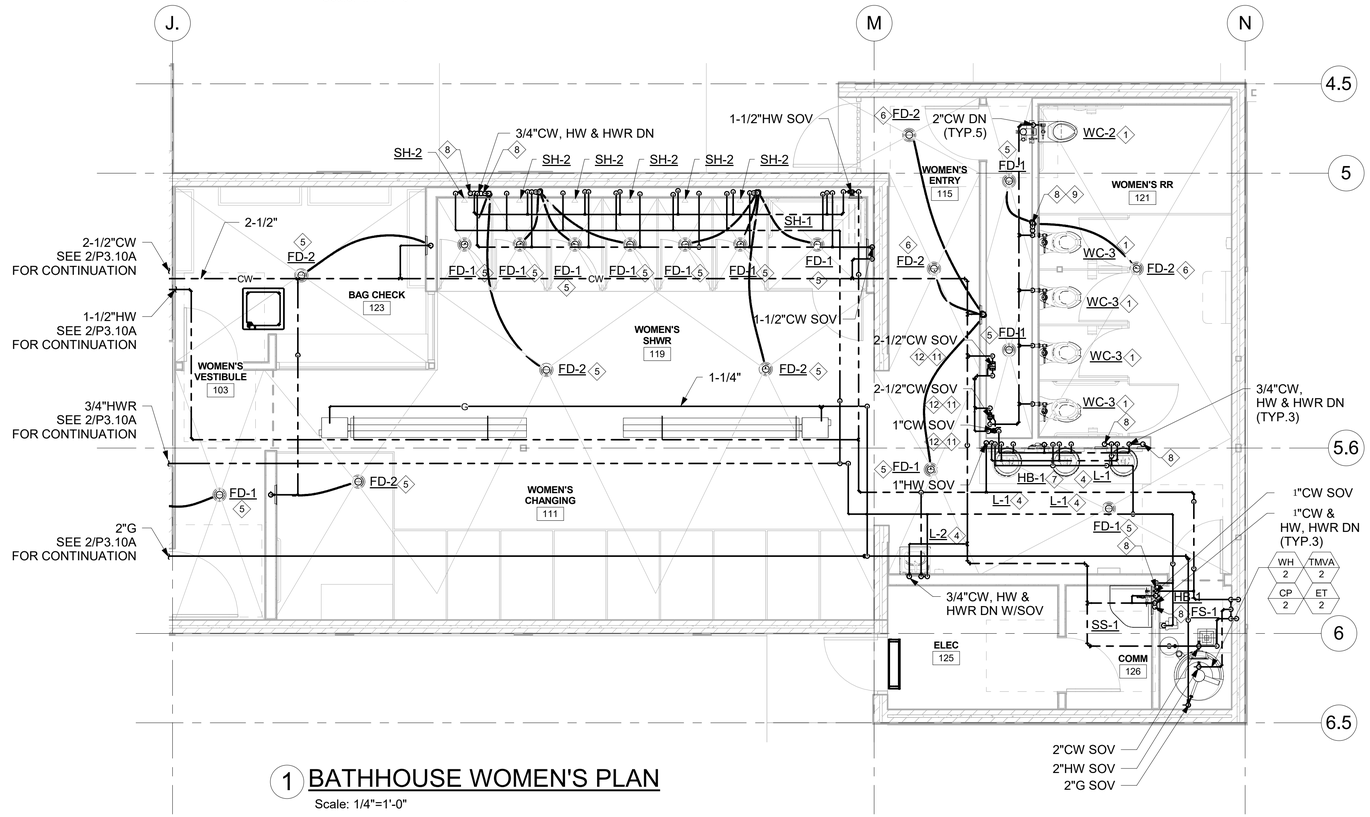

1 BATHHOUSE WOMEN'S PLAN

Scale: 1/4"=1'-0"

NOTES:

- TRAP PRIMERS SERVING MORE THAN ONE FIXTURE SHALL BE PROVIDED WITH A DISTRIBUTION UNIT AND A SEPERATE LINE SHALL BE PROVIDED TO EACH FIXTURE FROM THE TRAP PRIMER.
- DOMESTIC WATER PIPING TO EACH FIXTURE SHALL BE RUN INDIVIDUALLY FROM EACH BRANCH. DO NOT RUN HORIZONTALLY BETWEEN THE STUDS FROM FIXTURE TO FIXTURE. SEE RISER DIAGRAM FOR PIPE SIZES.

1. 2"V, 4"W AND 2"CW
2. 1-1/2"V, 2"W AND 2"CW
3. 1-1/2"V, 2"W AND 3/4"CW
4. 1-1/2"V, 3"W, 3/4"CW AND HW
5. 1-1/2"V, 2"W AND 3/4"ATP
6. 2"V, 4"W AND 3/4"ATP
7. 3/4"CW
8. WHA-1 BEHIND ACCESS PANEL
9. ATP-1 BEHIND ACCESS PANEL
10. DN AND CONNECTION TO FIXTURES
11. ZONE OR FLOOR SOV BEHIND ACCESS PANEL
12. SOV BEHIND ACCESS PANEL (5-7 FEET ABOVE FINISHED FLOOR, INSIDE A MIN. 6"PLUMBING WALL
13. CD DN CONNECT TO SINK TAILPIECE, SEE FOR DETAILS
14. CD DN AND SPILL INTO SERVICE SINK
15. PROVIDE 8" PLUMBING WALL
16. PROVIDE 14" PLUMBING WALL
17. SEE AQUATIC DWG. MR-1 FOR CONTINUATION

ENGINEERING
CITY OF LOS ANGELES

BUREAU OF ENGINEERING

NO.	REVISION DESCRIPTION	DATE	BY

BUILDING NO. -

INDEX NO. RP-300118

PROFESSIONAL ENGINEER JAMES H. SHWE No. 26903 (Retired 9/30/20) MECHANICAL STATE OF CALIFORNIA

DEPARTMENT OF PUBLIC WORKS
CITY OF LOS ANGELES

GARY LEE MOORE, PE, ENV SP
CITY ENGINEER

	DATE:
ARCHITECTURAL DIVISION	
ARCHITECT/ENGINEER: JAMES H. SHWE	LIC. NO.: M26903
DESIGNED BY:	07/15/20
DRAWN BY:	07/15/20
CHECKED BY:	07/15/20
APPROVED BY: Approver	07/15/20

VERTICAL CONTROL:
HORIZONTAL CONTROL:

SHEET TITLE: ENLARGED FLOOR PLANS (WATER AND GAS)

PROJECT: GRANADA HILLS POOL AND BATHHOUSE REPLACEMENT PROJECT

ADDRESS: 16730 CHATSWORTH STREET GRANADA HILLS, CA 91344

BUREAU OF ENGINEERING OFFICIAL RECORD

BID SET
PROJECT ISSUE DATE: 06/22/21

WORK ORDER NO. #E170517

PLAN FILE NO.

DRAWING NO. P3.11A

SHEET OF SHEETS

PLOTTED:7/16/2020 1:45:46 PM

THE CITY OF LOS ANGELES OR ITS OFFICERS OR AGENTS SHALL NOT BE RESPONSIBLE FOR THE ACCURACY OR COMPLETENESS OF ELECTRONIC COPIES OF THIS PLAN SHEET.

TTLB TEMPLATE REVISION DATE: 02/2013
SHEET ISSUE DATE: 02/07/18
FILE PATH: BIM 360://Granada Hills Pool Renovation/P_Granada-Hills_2017-msl.rvt

REVISION DATES (DESIGN STAGE ONLY)

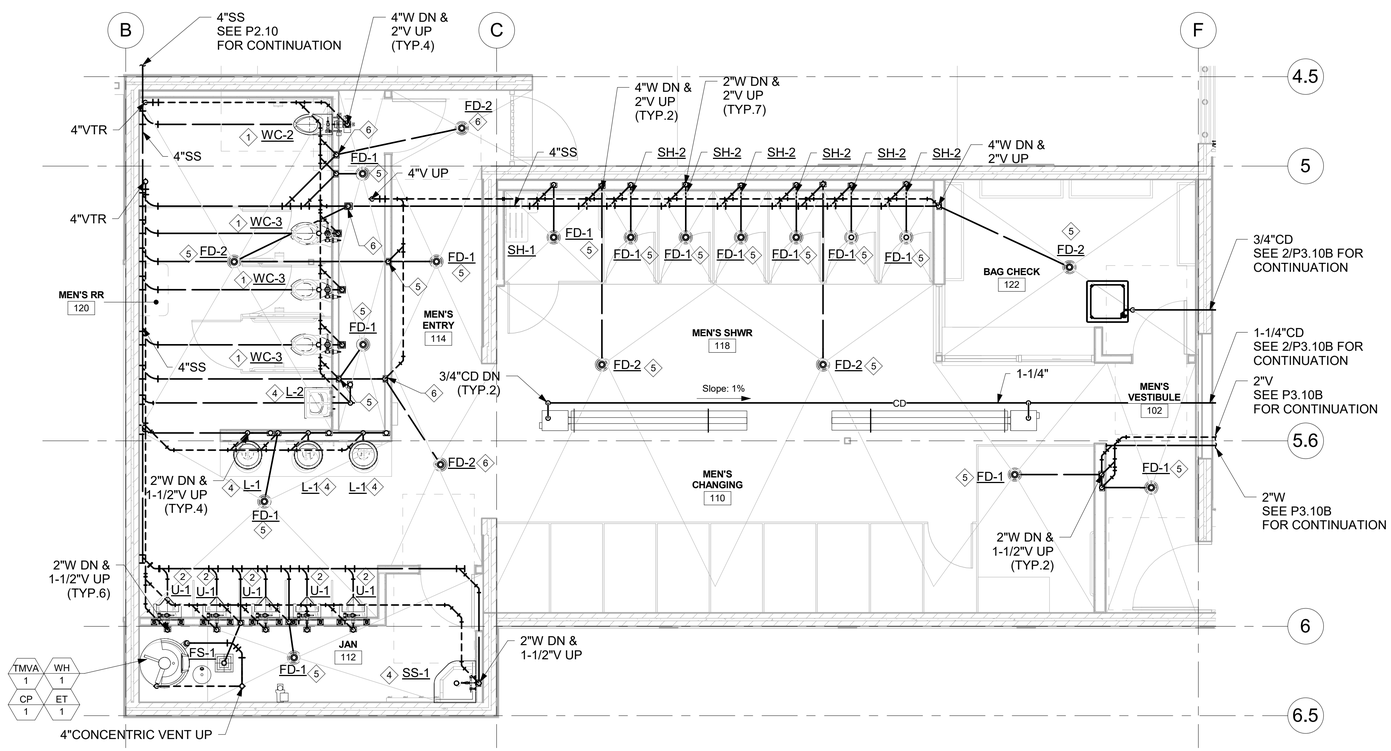

2 BATHHOUSE MEN'S PLAN

Scale: 1/4"=1'-0"

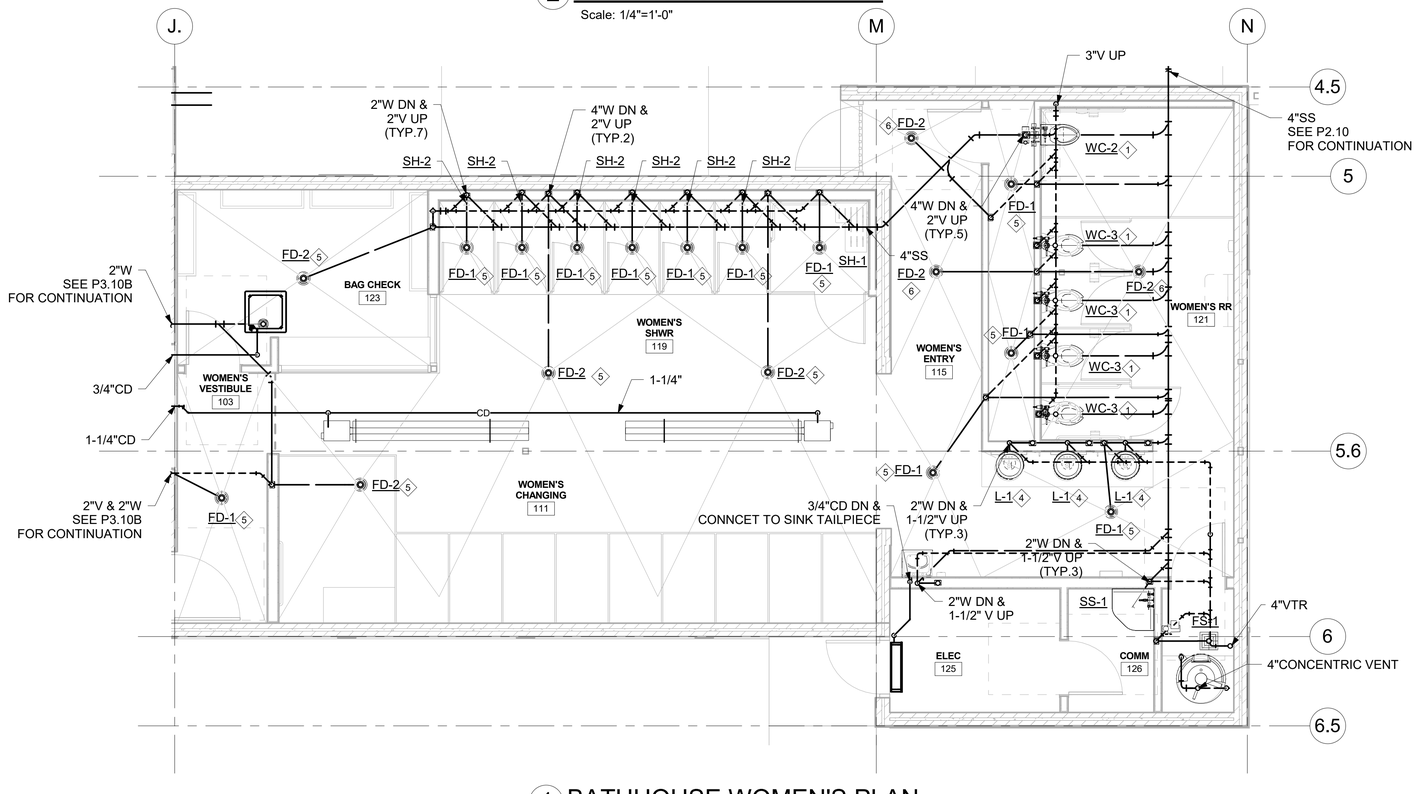

1 BATHHOUSE WOMEN'S PLAN

Scale: 1/4"=1'-0"

NOTES:

- TRAP PRIMERS SERVING MORE THAN ONE FIXTURE SHALL BE PROVIDED WITH A DISTRIBUTION UNIT AND A SEPERATE LINE SHALL BE PROVIDED TO EACH FIXTURE FROM THE TRAP PRIMER.
- DOMESTIC WATER PIPING TO EACH FIXTURE SHALL BE RUN INDIVIDUALLY FROM EACH BRANCH. DO NOT RUN HORIZONTALLY BETWEEN THE STUDS FROM FIXTURE TO FIXTURE. SEE RISER DIAGRAM FOR PIPE SIZES.

1. 2"V, 4"W AND 2"CW
2. 1-1/2"V, 2"W AND 2"CW
3. 1-1/2"V, 2"W AND 3/4"CW
4. 1-1/2"V, 3"W, 3/4"CW AND HW
5. 1-1/2"V, 2"W AND 3/4"ATP
6. 2"V, 4"W AND 3/4"ATP
7. 3/4"CW
8. WHA-1 BEHIND ACCESS PANEL
9. ATP-1 BEHIND ACCESS PANEL
10. DN AND CONNECTION TO FIXTURES
11. ZONE OR FLOOR SOV BEHIND ACCESS PANEL
12. SOV BEHIND ACCESS PANEL (5-7 FEET ABOVE FINISHED FLOOR, INSIDE A MIN. 6"PLUMBING WALL
13. CD DN CONNECT TO SINK TAILPIECE, SEE FOR DETAILS
14. CD DN AND SPILL INTO SERVICE SINK
15. PROVIDE 8" PLUMBING WALL
16. PROVIDE 14" PLUMBING WALL
17. SEE AQUATIC DWG. MR-1 FOR CONTINUATION

BUREAU OF ENGINEERING
OFFICIAL RECORD

ENGINEERING
CITY OF LOS ANGELES

BUILDING NO. -

INDEX NO. RP-300118

NO.	REVISION DESCRIPTION	DATE	BY

REGISTERED PROFESSIONAL ENGINEER JAMES H. SHWE No. 26903 (Retired 9/30/20) MECHANICAL STATE OF CALIFORNIA

DEPARTMENT OF PUBLIC WORKS
BUREAU OF ENGINEERING
CITY OF LOS ANGELES

GARY LEE MOORE, PE, ENV SP
CITY ENGINEER

ARCHITECTURAL DIVISION

ARCHITECT/ENGINEER:	JAMES H. SHWE	LIC. NO.: M26903
DESIGNED BY:	MAROKO & SHWE, INC.	
DRAWN BY:	E.N., R.N	
CHECKED BY:	J.S	
APPROVED BY:	Approver	

CITY ENGINEER	DATE:
	07/15/20
	07/15/20
	07/15/20
	07/15/20

VERTICAL CONTROL:
HORIZONTAL CONTROL:

SHEET TITLE: ENLARGED FLOOR PLANS (WASTE AND VENT)

PROJECT: GRANADA HILLS POOL AND BATHHOUSE REPLACEMENT PROJECT

ADDRESS: 16730 CHATSWORTH STREET
GRANADA HILLS, CA 91344

BID SET
PROJECT ISSUE DATE: 06/22/21

WORK ORDER NO.
#E170517

PLAN FILE NO.

DRAWING NO.
P3.11B

SHEET 0 OF SHEETS

PLOTTED:7/16/2020 1:46:30 PM

THE CITY OF LOS ANGELES OR ITS OFFICERS OR AGENTS SHALL NOT BE RESPONSIBLE FOR THE ACCURACY OR COMPLETENESS OF ELECTRONIC COPIES OF THIS PLAN SHEET.

TTLB TEMPLATE REVISION DATE: 02/2013
SHEET ISSUE DATE: 12/11/18
FILE PATH: BIM 360://Granada Hills Pool Renovation/P_Granada-Hills_2017-msi.rvt

REVISION DATES (DESIGN STAGE ONLY)

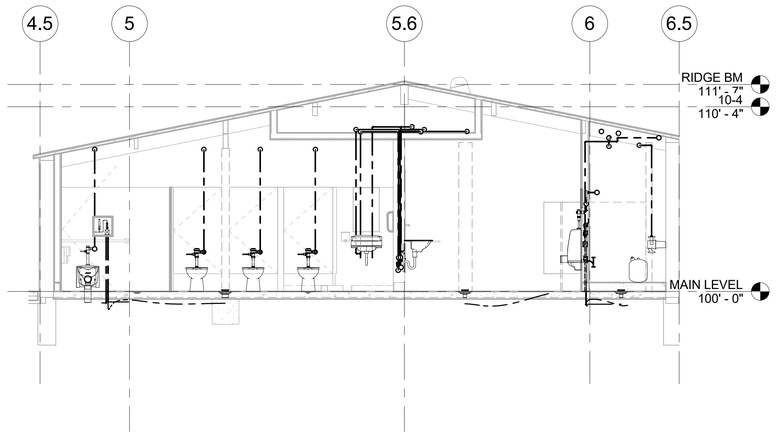

1C SECTION A

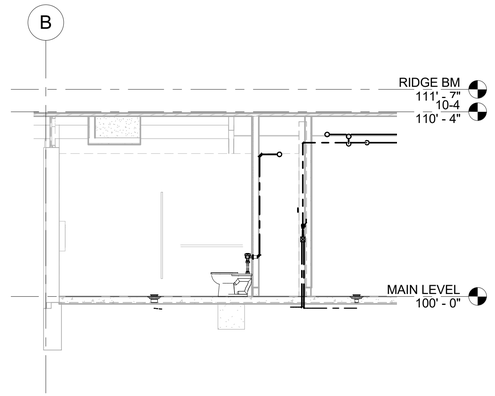

1B SECTION B

NOTES:

- TRAP PRIMERS SERVING MORE THAN ONE FIXTURE SHALL BE PROVIDED WITH A DISTRIBUTION UNIT AND A SEPERATE LINE SHALL BE PROVIDED TO EACH FIXTURE FROM THE TRAP PRIMER.
- DOMESTIC WATER PIPING TO EACH FIXTURE SHALL BE RUN INDIVIDUALLY FROM EACH BRANCH. DO NOT RUN HORIZONTALLY BETWEEN THE STUDS FROM FIXTURE TO FIXTURE. SEE RISER DIAGRAM FOR PIPE SIZES.

1. 2"V, 4"W AND 2"CW
2. 1-1/2"V, 2"W AND 2"CW
3. 1-1/2"V, 2"W AND 3/4"CW
4. 1-1/2"V, 3"W, 3/4"CW AND HW
5. 1-1/2"V, 2"W AND 3/4"ATP
6. 2"V, 4"W AND 3/4"ATP
7. 3/4"CW
8. WHA-1 BEHIND ACCESS PANEL
9. ATP-1 BEHIND ACCESS PANEL
10. DN AND CONNECTION TO FIXTURES
11. ZONE OR FLOOR SOV BEHIND ACCESS PANEL
12. SOV BEHIND ACCESS PANEL (5-7 FEET ABOVE FINISHED FLOOR, INSIDE A MIN. 6"PLUMBING WALL
13. CD DN CONNECT TO SINK TAILPIECE, SEE FOR DETAILS
14. CD DN AND SPILL INTO SERVICE SINK
15. PROVIDE 8" PLUMBING WALL
16. PROVIDE 14" PLUMBING WALL
17. SEE AQUATIC DWG. MR-1 FOR CONTINUATION

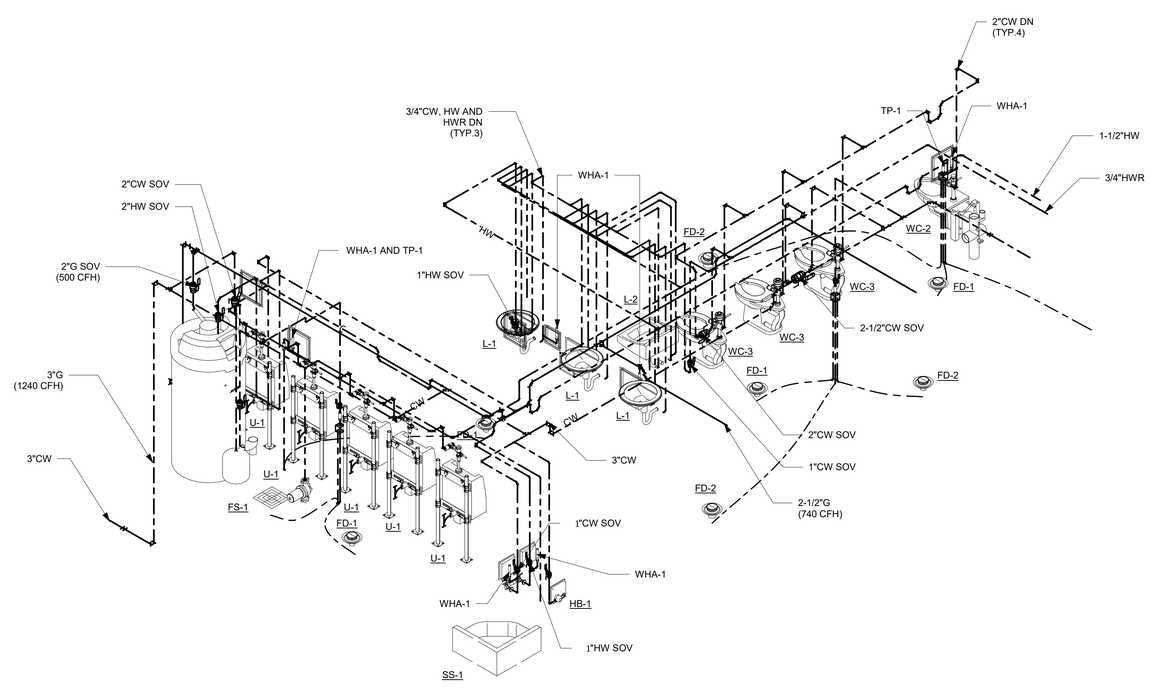

1D ISOMETRIC VIEW

1 MEN'S RR (120) & JAN (112) - WATER PIPING LAYOUT

Scale: 1/4"=1'-0"

BUREAU OF ENGINEERING
OFFICIAL RECORD

BUREAU OF ENGINEERING
ENGINEERING
CITY OF LOS ANGELES

NO.	REVISION DESCRIPTION	DATE	BY

BUILDING NO. -

INDEX NO. RP-300118

REGISTERED PROFESSIONAL ENGINEER JAMES H. SHWE No. 26903 (Retired 9/30/20) MECHANICAL STATE OF CALIFORNIA

DEPARTMENT OF PUBLIC WORKS
CITY OF LOS ANGELES

GARY LEE MOORE, PE, ENV SP — CITY ENGINEER

	DATE:
	07/15/20
	07/15/20
	07/15/20
	07/15/20
	07/15/20

ARCHITECTURAL DIVISION

ARCHITECT/ENGINEER: JAMES H. SHWE LIC. NO.: M26903
DESIGNED BY: MAROKO & SHWE, INC.
DRAWN BY: E.N. R.N
CHECKED BY: J.S
APPROVED BY: Approver

BID SET
PROJECT ISSUE DATE: 06/22/21

VERTICAL CONTROL:
HORIZONTAL CONTROL:

SHEET TITLE: MEN'S RR (120) AND JAN (112) - WATER PIPING LAYOUT

PROJECT: GRANADA HILLS POOL AND BATHHOUSE REPLACEMENT PROJECT

ADDRESS: 16730 CHATSWORTH STREET GRANADA HILLS, CA 91344

WORK ORDER NO. #E170517

PLAN FILE NO.

DRAWING NO. P3.12

SHEET 0 OF SHEETS

PLOTTED:7/16/2020 1:47:18 PM

THE CITY OF LOS ANGELES OR ITS OFFICERS OR AGENTS SHALL NOT BE RESPONSIBLE FOR THE ACCURACY OR COMPLETENESS OF ELECTRONIC COPIES OF THIS PLAN SHEET.

TTLB TEMPLATE REVISION DATE: 02/2013
SHEET ISSUE DATE: 01/30/18
FILE PATH: BIM 360://Granada Hills Pool Renovation/P_Granada-Hills_2017-msi.rvt

REVISION DATES (DESIGN STAGE ONLY)

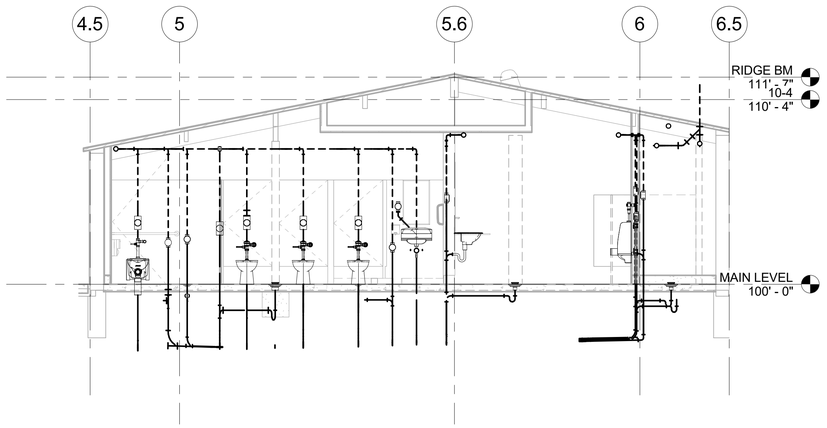

1C SECTION A

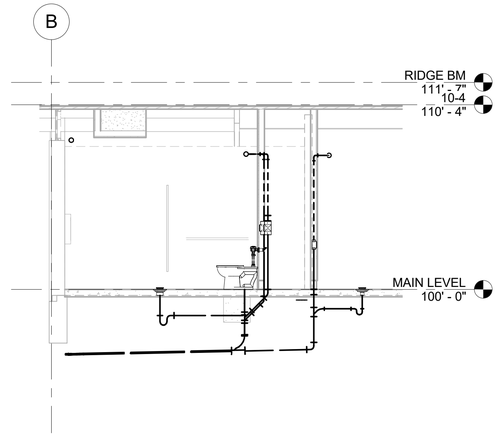

1B SECTION B

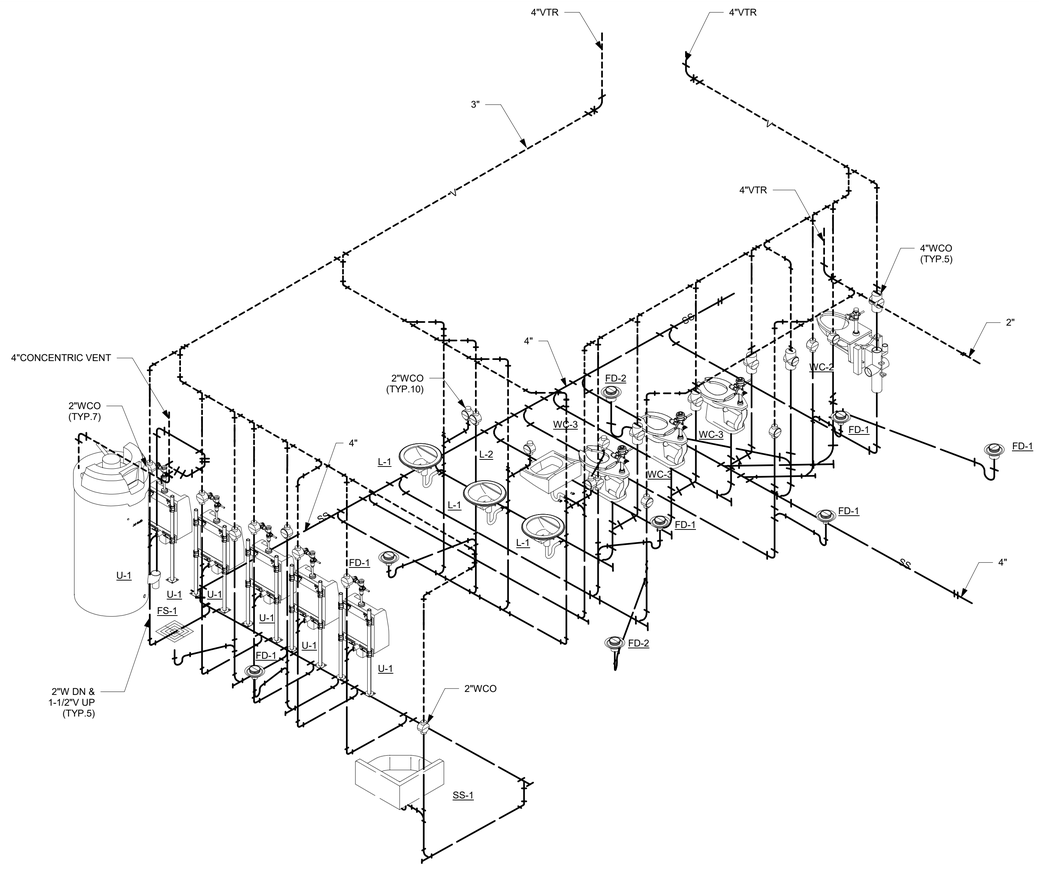

1D ISOMETRIC VIEW

1 MEN'S RR (120) & JAN (112) - WASTE PIPING LAYOUT

Scale: 1/4"=1'-0"

NOTES:

- TRAP PRIMERS SERVING MORE THAN ONE FIXTURE SHALL BE PROVIDED WITH A DISTRIBUTION UNIT AND A SEPERATE LINE SHALL BE PROVIDED TO EACH FIXTURE FROM THE TRAP PRIMER.
- DOMESTIC WATER PIPING TO EACH FIXTURE SHALL BE RUN INDIVIDUALLY FROM EACH BRANCH. DO NOT RUN HORIZONTALLY BETWEEN THE STUDS FROM FIXTURE TO FIXTURE. SEE RISER DIAGRAM FOR PIPE SIZES.

1. 2"V, 4"W AND 2"CW
2. 1-1/2"V, 2"W AND 2"CW
3. 1-1/2"V, 2"W AND 3/4"CW
4. 1-1/2"V, 3"W, 3/4"CW AND HW
5. 1-1/2"V, 2"W AND 3/4"ATP
6. 2"V, 4"W AND 3/4"ATP
7. 3/4"CW
8. WHA-1 BEHIND ACCESS PANEL
9. ATP-1 BEHIND ACCESS PANEL
10. DN AND CONNECTION TO FIXTURES
11. ZONE OR FLOOR SOV BEHIND ACCESS PANEL
12. SOV BEHIND ACCESS PANEL (5-7 FEET ABOVE FINISHED FLOOR, INSIDE A MIN. 6"PLUMBING WALL
13. CD DN CONNECT TO SINK TAILPIECE, SEE FOR DETAILS
14. CD DN AND SPILL INTO SERVICE SINK
15. PROVIDE 8" PLUMBING WALL
16. PROVIDE 14" PLUMBING WALL
17. SEE AQUATIC DWG. MR-1 FOR CONTINUATION

BUREAU OF ENGINEERING
OFFICIAL RECORD

ENGINEERING
CITY OF LOS ANGELES

BUREAU OF ENGINEERING

NO.	REVISION DESCRIPTION	DATE	BY

BUILDING NO. -

INDEX NO. RP-300118

REGISTERED PROFESSIONAL ENGINEER
JAMES H. SHWE
No. 26903
(Retired 9/30/20)
MECHANICAL
STATE OF CALIFORNIA

DEPARTMENT OF PUBLIC WORKS
CITY OF LOS ANGELES

GARY LEE MOORE, PE, ENV SP
CITY ENGINEER

ARCHITECTURAL DIVISION

		DATE:
ARCHITECT/ENGINEER:	JAMES H. SHWE	07/15/20
LIC. NO.:	M26903	07/15/20
DESIGNED BY:	MAROKO & SHWE, INC.	07/15/20
DRAWN BY:	E.N, R.N	07/15/20
CHECKED BY:	J.S	07/15/20
APPROVED BY:	Approver	

BID SET
PROJECT ISSUE DATE: 06/22/21

CITY OF LOS ANGELES
VERTICAL CONTROL:
HORIZONTAL CONTROL:

SHEET TITLE: MEN'S RR (120) AND JAN (112) - WASTE AND VENT PIPING LAYOUT

PROJECT: GRANADA HILLS POOL AND BATHHOUSE REPLACEMENT PROJECT

ADDRESS: 16730 CHATSWORTH STREET
GRANADA HILLS, CA 91344

WORK ORDER NO. #E170517

PLAN FILE NO.

DRAWING NO. P3.13

SHEET 0 OF SHEETS

PLOTTED:7/16/2020 1:48:09 PM

THE CITY OF LOS ANGELES OR ITS OFFICERS OR AGENTS SHALL NOT BE RESPONSIBLE FOR THE ACCURACY OR COMPLETENESS OF ELECTRONIC COPIES OF THIS PLAN SHEET.

TTLB TEMPLATE REVISION DATE: 02/2013
SHEET ISSUE DATE: 01/30/18
FILE PATH: BIM 360://Granada Hills Pool Renovation/P_Granada-Hills_2017-msi.rvt

REVISION DATES (DESIGN STAGE ONLY)

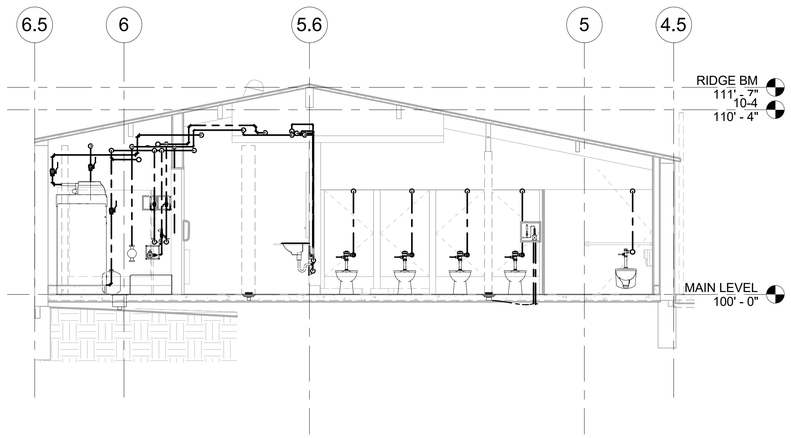

1C SECTION A

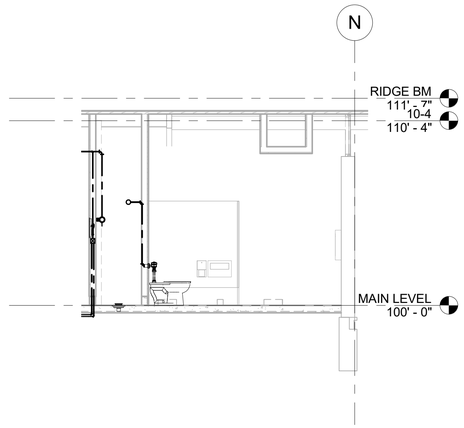

1B SECTION B

NOTES:

- TRAP PRIMERS SERVING MORE THAN ONE FIXTURE SHALL BE PROVIDED WITH A DISTRIBUTION UNIT AND A SEPERATE LINE SHALL BE PROVIDED TO EACH FIXTURE FROM THE TRAP PRIMER.
- DOMESTIC WATER PIPING TO EACH FIXTURE SHALL BE RUN INDIVIDUALLY FROM EACH BRANCH. DO NOT RUN HORIZONTALLY BETWEEN THE STUDS FROM FIXTURE TO FIXTURE. SEE RISER DIAGRAM FOR PIPE SIZES.

1. 2"V, 4"W AND 2"CW
2. 1-1/2"V, 2"W AND 2"CW
3. 1-1/2"V, 2"W AND 3/4"CW
4. 1-1/2"V, 3"W, 3/4"CW AND HW
5. 1-1/2"V, 2"W AND 3/4"ATP
6. 2"V, 4"W AND 3/4"ATP
7. 3/4"CW
8. WHA-1 BEHIND ACCESS PANEL
9. ATP-1 BEHIND ACCESS PANEL
10. DN AND CONNECTION TO FIXTURES
11. ZONE OR FLOOR SOV BEHIND ACCESS PANEL
12. SOV BEHIND ACCESS PANEL (5-7 FEET ABOVE FINISHED FLOOR, INSIDE A MIN. 6"PLUMBING WALL
13. CD DN CONNECT TO SINK TAILPIECE, SEE FOR DETAILS
14. CD DN AND SPILL INTO SERVICE SINK
15. PROVIDE 8" PLUMBING WALL
16. PROVIDE 14" PLUMBING WALL
17. SEE AQUATIC DWG. MR-1 FOR CONTINUATION

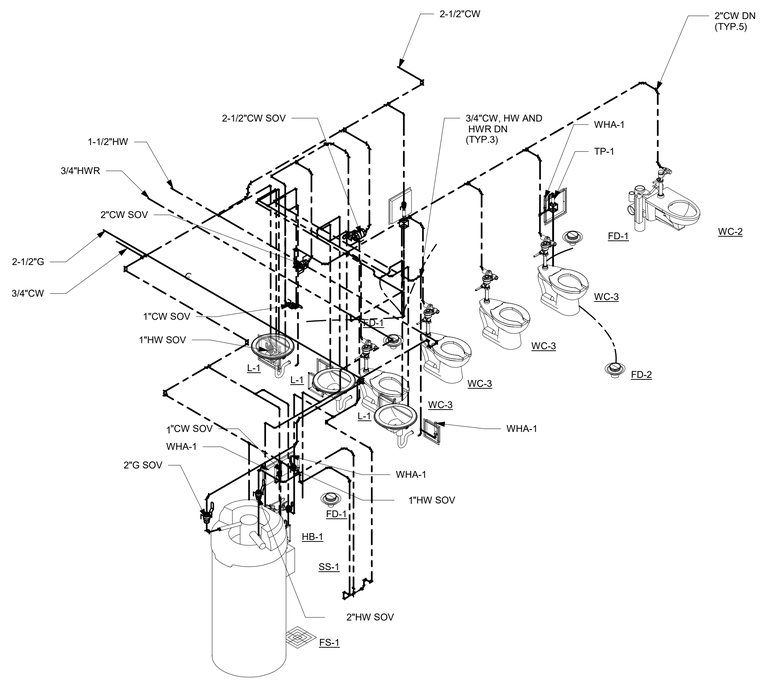

1D ISOMETRIC VIEW

1 WOMEN'S RR (121) & JAN (113) - WATER PIPING LAYOUT

Scale: 1/4"=1'-0"

BUREAU OF ENGINEERING
OFFICIAL RECORD

BID SET
PROJECT ISSUE DATE: 06/22/21

CITY OF LOS ANGELES
VERTICAL CONTROL:
HORIZONTAL CONTROL:

SHEET TITLE: WOMEN'S RR (121) AND JAN (113) - WATER PIPING LAYOUT

PROJECT: GRANADA HILLS POOL AND BATHHOUSE REPLACEMENT PROJECT

ADDRESS: 16730 CHATSWORTH STREET GRANADA HILLS, CA 91344

WORK ORDER NO.
#E170517

PLAN FILE NO.

DRAWING NO.
P3.14

SHEET 0 OF SHEETS

DEPARTMENT OF PUBLIC WORKS
BUREAU OF ENGINEERING

NO.	REVISION DESCRIPTION	DATE	BY

BUILDING NO. -

INDEX NO. RP-300118

ENGINEERING
CITY OF LOS ANGELES

REGISTERED PROFESSIONAL ENGINEER
JAMES H. SHWE
No. 26903
(Retired 9/30/20)
MECHANICAL
STATE OF CALIFORNIA

CITY ENGINEER

	DATE:
GARY LEE MOORE, PE, ENV SP	
ARCHITECTURAL DIVISION	
ARCHITECT/ENGINEER: JAMES H. SHWE LIC. NO.: M26903	07/15/20
DESIGNED BY: MAROKO & SHWE, INC.	07/15/20
DRAWN BY: E.N, R.N	07/15/20
CHECKED BY: J.S	07/15/20
APPROVED BY: Approver	07/15/20

THE CITY OF LOS ANGELES OR ITS OFFICERS OR AGENTS SHALL NOT BE RESPONSIBLE FOR THE ACCURACY OR COMPLETENESS OF ELECTRONIC COPIES OF THIS PLAN SHEET.

REVISION DATES (DESIGN STAGE ONLY)

TTLB TEMPLATE REVISION DATE: 02/2013
SHEET ISSUE DATE: 07/03/18
FILE PATH: BIM 360://Granada Hills Pool Renovation/P_Granada-Hills_2017-msl.rvt

PLOTTED:7/16/2020 1:48:43 PM

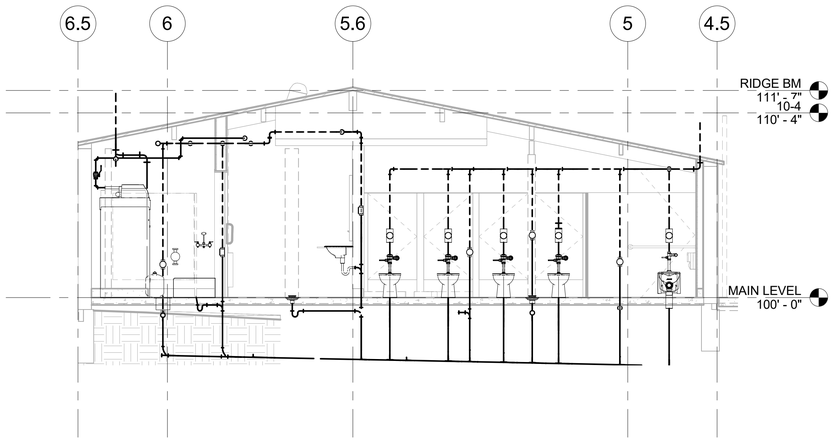

1C SECTION A

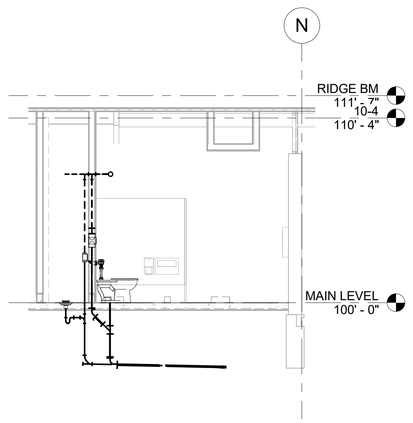

1B SECTION B

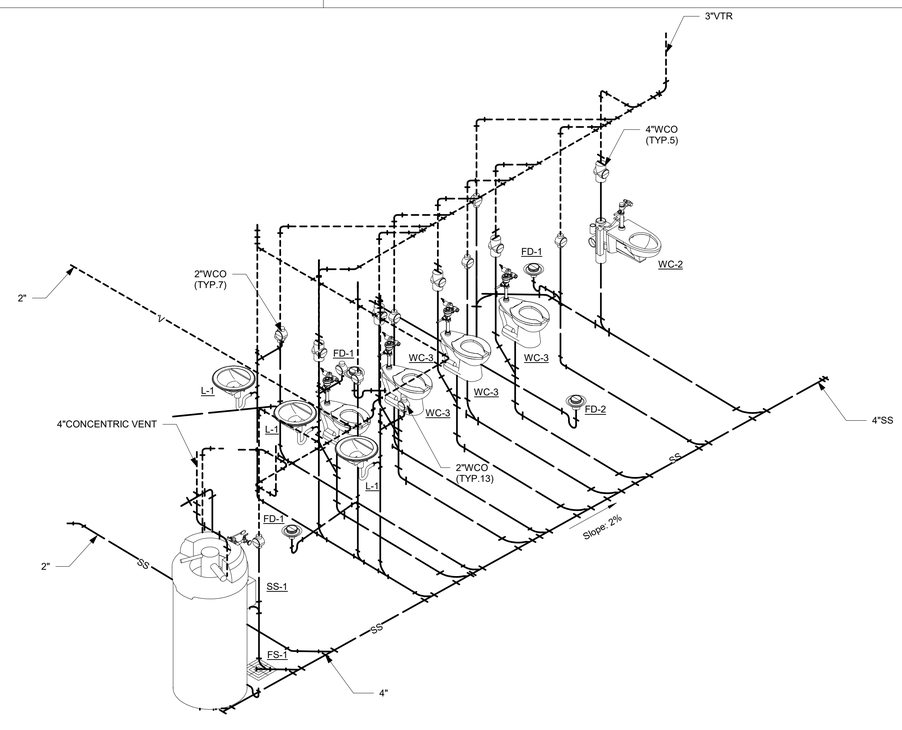

1D ISOMETRIC VIEW

1 WOMEN'S RR (121) & JAN (113) - WASTE PIPING LAYOUT

Scale: 1/4"=1'-0"

NOTES:

- TRAP PRIMERS SERVING MORE THAN ONE FIXTURE SHALL BE PROVIDED WITH A DISTRIBUTION UNIT AND A SEPERATE LINE SHALL BE PROVIDED TO EACH FIXTURE FROM THE TRAP PRIMER.
- DOMESTIC WATER PIPING TO EACH FIXTURE SHALL BE RUN INDIVIDUALLY FROM EACH BRANCH. DO NOT RUN HORIZONTALLY BETWEEN THE STUDS FROM FIXTURE TO FIXTURE. SEE RISER DIAGRAM FOR PIPE SIZES.

1. 2"V, 4"W AND 2"CW
2. 1-1/2"V, 2"W AND 2"CW
3. 1-1/2"V, 2"W AND 3/4"CW
4. 1-1/2"V, 3"W, 3/4"CW AND HW
5. 1-1/2"V, 2"W AND 3/4"ATP
6. 2"V, 4"W AND 3/4"ATP
7. 3/4"CW
8. WHA-1 BEHIND ACCESS PANEL
9. ATP-1 BEHIND ACCESS PANEL
10. DN AND CONNECTION TO FIXTURES
11. ZONE OR FLOOR SOV BEHIND ACCESS PANEL
12. SOV BEHIND ACCESS PANEL (5-7 FEET ABOVE FINISHED FLOOR, INSIDE A MIN. 6"PLUMBING WALL
13. CD DN CONNECT TO SINK TAILPIECE, SEE FOR DETAILS
14. CD DN AND SPILL INTO SERVICE SINK
15. PROVIDE 8" PLUMBING WALL
16. PROVIDE 14" PLUMBING WALL
17. SEE AQUATIC DWG. MR-1 FOR CONTINUATION

BUREAU OF ENGINEERING

ENGINEERING
CITY OF LOS ANGELES

NO.	REVISION DESCRIPTION	DATE	BY

BUILDING NO. -

INDEX NO. RP-300118

REGISTERED PROFESSIONAL ENGINEER JAMES H. SHWE No. 26903 (Retired 9/30/20) MECHANICAL STATE OF CALIFORNIA

BUREAU OF ENGINEERING
OFFICIAL RECORD

DEPARTMENT OF PUBLIC WORKS
CITY OF LOS ANGELES

GARY LEE MOORE, PE, ENV SP
CITY ENGINEER

	DATE:
ARCHITECTURAL DIVISION	
ARCHITECT/ENGINEER: JAMES H. SHWE	LIC. NO.: M26903
DESIGNED BY: MAROKO & SHWE, INC.	07/15/20
DRAWN BY: E.N, R.N	07/15/20
CHECKED BY: J.S	07/15/20
APPROVED BY: Approver	07/15/20

VERTICAL CONTROL:
HORIZONTAL CONTROL:

SHEET TITLE: WOMEN'S RR (121) AND JAN (113) - WASTE AND VENT PIPING LAYOUT

PROJECT: GRANADA HILLS POOL AND BATHHOUSE REPLACEMENT PROJECT

ADDRESS: 16730 CHATSWORTH STREET GRANADA HILLS, CA 91344

BID SET
PROJECT ISSUE DATE: 06/22/21

WORK ORDER NO. #E170517

PLAN FILE NO.

DRAWING NO. P3.15

SHEET 0 OF SHEETS

PLOTTED:7/16/2020 1:49:15 PM

THE CITY OF LOS ANGELES OR ITS OFFICERS OR AGENTS SHALL NOT BE RESPONSIBLE FOR THE ACCURACY OR COMPLETENESS OF ELECTRONIC COPIES OF THIS PLAN SHEET.

TTLB TEMPLATE REVISION DATE: 02/2013
SHEET ISSUE DATE: 07/03/18
FILE PATH: BIM 360://Granada Hills Pool Renovation/P_Granada-Hills_2017-msi.rvt

REVISION DATES (DESIGN STAGE ONLY)

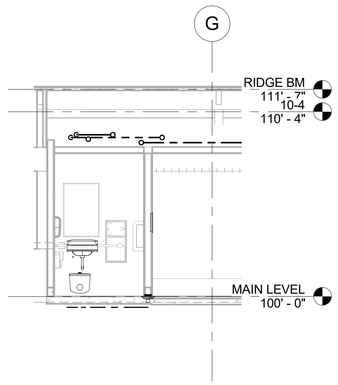

1C SECTION A

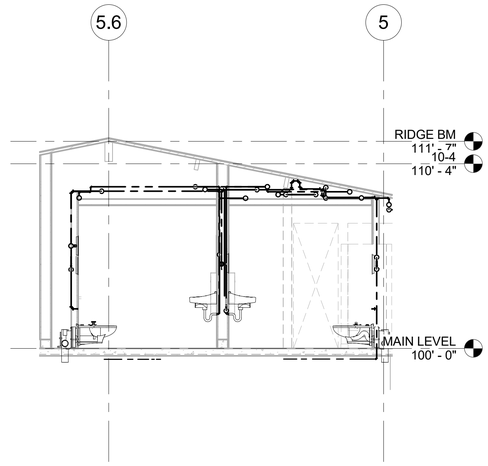

1B SECTION B

NOTES:
- TRAP PRIMERS SERVING MORE THAN ONE FIXTURE SHALL BE PROVIDED WITH A DISTRIBUTION UNIT AND A SEPERATE LINE SHALL BE PROVIDED TO EACH FIXTURE FROM THE TRAP PRIMER.
- DOMESTIC WATER PIPING TO EACH FIXTURE SHALL BE RUN INDIVIDUALLY FROM EACH BRANCH. DO NOT RUN HORIZONTALLY BETWEEN THE STUDS FROM FIXTURE TO FIXTURE. SEE RISER DIAGRAM FOR PIPE SIZES.

1. 2"V, 4"W AND 2"CW
2. 1-1/2"V, 2"W AND 2"CW
3. 1-1/2"V, 2"W AND 3/4"CW
4. 1-1/2"V, 3"W, 3/4"CW AND HW
5. 1-1/2"V, 2"W AND 3/4"ATP
6. 2"V, 4"W AND 3/4"ATP
7. 3/4"CW
8. WHA-1 BEHIND ACCESS PANEL
9. ATP-1 BEHIND ACCESS PANEL
10. DN AND CONNECTION TO FIXTURES
11. ZONE OR FLOOR SOV BEHIND ACCESS PANEL
12. SOV BEHIND ACCESS PANEL (5-7 FEET ABOVE FINISHED FLOOR, INSIDE A MIN. 6"PLUMBING WALL
13. CD DN CONNECT TO SINK TAILPIECE, SEE FOR DETAILS
14. CD DN AND SPILL INTO SERVICE SINK
15. PROVIDE 8" PLUMBING WALL
16. PROVIDE 14" PLUMBING WALL
17. SEE AQUATIC DWG. MR-1 FOR CONTINUATION

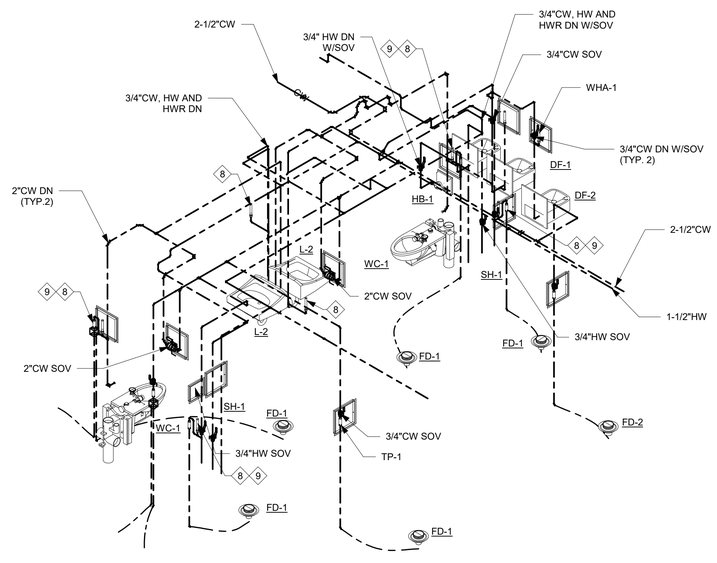

1D ISOMETRIC VIEW

1 FAM/UNISEX (108) AND (109) - WATER PIPING LAYOUT

Scale: 1/4"=1'-0"

BUREAU OF ENGINEERING
OFFICIAL RECORD

BID SET
PROJECT ISSUE DATE: 06/22/21

CITY OF LOS ANGELES
DEPARTMENT OF PUBLIC WORKS
BUREAU OF ENGINEERING

GARY LEE MOORE, PE, ENV SP
CITY ENGINEER

DATE:	07/15/20
ARCHITECTURAL DIVISION	
ARCHITECT/ENGINEER: JAMES H. SHWE	LIC. NO.: M26903
DESIGNED BY: MAROKO & SHWE, INC.	
DRAWN BY: E.N. R.N	
CHECKED BY: J.S	
APPROVED BY: Approver	

VERTICAL CONTROL:
HORIZONTAL CONTROL:

SHEET TITLE: FAM/UNISEX (108) AND (109) - WATER PIPING LAYOUT

PROJECT: GRANADA HILLS POOL AND BATHHOUSE REPLACEMENT PROJECT

ADDRESS: 16730 CHATSWORTH STREET GRANADA HILLS, CA 91344

WORK ORDER NO. #E170517

PLAN FILE NO.

DRAWING NO. P3.16

SHEET O F SHEETS

NO.	REVISION DESCRIPTION	DATE	BY

BUILDING NO. -

INDEX NO. RP-300118

REGISTERED PROFESSIONAL ENGINEER JAMES H. SHWE No. 26903 (Retired 9/30/20) MECHANICAL STATE OF CALIFORNIA

CITY OF LOS ANGELES ENGINEERING

THE CITY OF LOS ANGELES OR ITS OFFICERS OR AGENTS SHALL NOT BE RESPONSIBLE FOR THE ACCURACY OR COMPLETENESS OF ELECTRONIC COPIES OF THIS PLAN SHEET.

REVISION DATES: (DESIGN STAGE ONLY)

TTLB TEMPLATE REVISION DATE: 02/2013
SHEET ISSUE DATE: 07/03/18
FILE PATH: BIM 360://Granada Hills Pool Renovation/P_Granada-Hills_2017-msi.rvt

PLOTTED:7/16/2020 1:49:42 PM

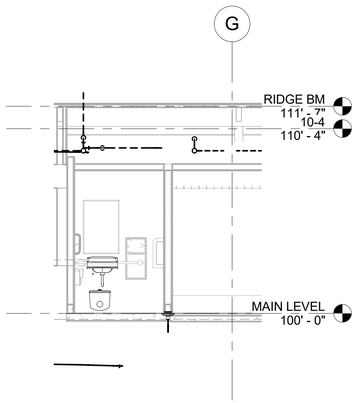

1C SECTION A

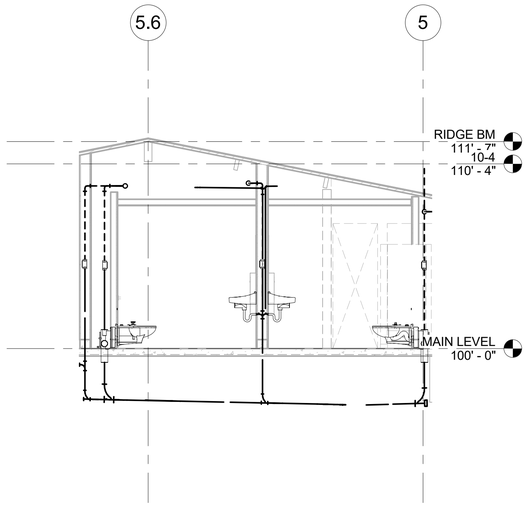

1B SECTION B

NOTES:

- TRAP PRIMERS SERVING MORE THAN ONE FIXTURE SHALL BE PROVIDED WITH A DISTRIBUTION UNIT AND A SEPERATE LINE SHALL BE PROVIDED TO EACH FIXTURE FROM THE TRAP PRIMER.
- DOMESTIC WATER PIPING TO EACH FIXTURE SHALL BE RUN INDIVIDUALLY FROM EACH BRANCH. DO NOT RUN HORIZONTALLY BETWEEN THE STUDS FROM FIXTURE TO FIXTURE. SEE RISER DIAGRAM FOR PIPE SIZES.

1. 2"V, 4"W AND 2"CW
2. 1-1/2"V, 2"W AND 2"CW
3. 1-1/2"V, 2"W AND 3/4"CW
4. 1-1/2"V, 3"W, 3/4"CW AND HW
5. 1-1/2"V, 2"W AND 3/4"ATP
6. 2"V, 4"W AND 3/4"ATP
7. 3/4"CW
8. WHA-1 BEHIND ACCESS PANEL
9. ATP-1 BEHIND ACCESS PANEL
10. DN AND CONNECTION TO FIXTURES
11. ZONE OR FLOOR SOV BEHIND ACCESS PANEL
12. SOV BEHIND ACCESS PANEL (5-7 FEET ABOVE FINISHED FLOOR, INSIDE A MIN. 6"PLUMBING WALL
13. CD DN CONNECT TO SINK TAILPIECE, SEE FOR DETAILS
14. CD DN AND SPILL INTO SERVICE SINK
15. PROVIDE 8" PLUMBING WALL
16. PROVIDE 14" PLUMBING WALL
17. SEE AQUATIC DWG. MR-1 FOR CONTINUATION

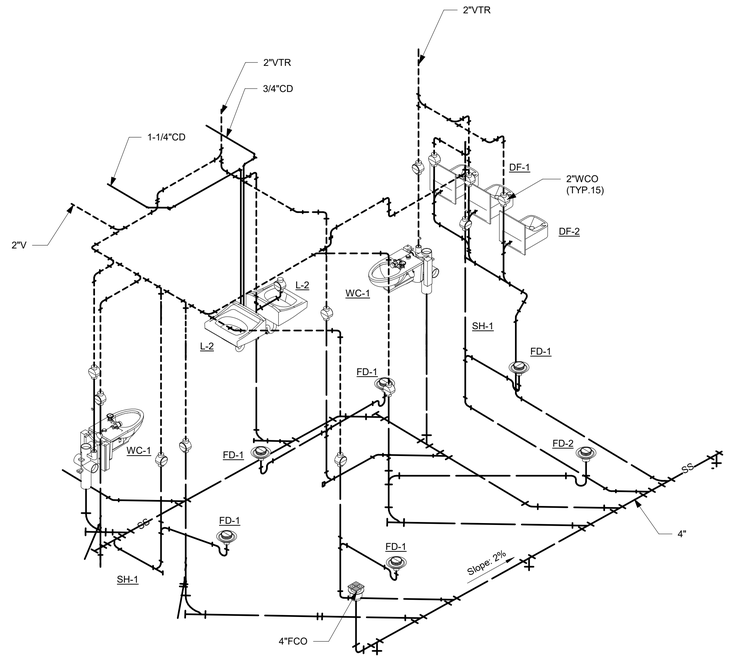

1D ISOMETRIC VIEW

1 FAM/UNISEX (108) AND (109) - WASTE AND VENT PIPING LAYOUT

Scale: 1/4"=1'-0"

BUREAU OF ENGINEERING
OFFICIAL RECORD

BID SET
PROJECT ISSUE DATE: 06/22/21

CITY OF LOS ANGELES
VERTICAL CONTROL:
HORIZONTAL CONTROL:

SHEET TITLE: FAM/UNISEX (108) & (109) - WASTE AND VENT PIPING LAYOUT

PROJECT: GRANADA HILLS POOL AND BATHHOUSE REPLACEMENT PROJECT

ADDRESS: 16730 CHATSWORTH STREET GRANADA HILLS, CA 91344

WORK ORDER NO.
#E170517

PLAN FILE NO.

DRAWING NO.
P3.17

SHEET 0 SHEETS

DEPARTMENT OF PUBLIC WORKS
BUREAU OF ENGINEERING
ENGINEERING
CITY OF LOS ANGELES

GARY LEE MOORE, PE, ENV SP
CITY ENGINEER
DATE: 07/15/20

ARCHITECTURAL DIVISION
ARCHITECT/ENGINEER: JAMES H. SHWE LIC. NO.: M26903
DESIGNED BY: MAROKO & SHWE, INC.
DRAWN BY: E.N, R.N
CHECKED BY: J.S
APPROVED BY: Approver

NO.	REVISION DESCRIPTION	DATE	BY

BUILDING NO. -

INDEX NO. RP-300118

REGISTERED PROFESSIONAL ENGINEER JAMES H. SHWE No. 26903 (Retired 9/30/20) MECHANICAL STATE OF CALIFORNIA

REVISION DATES (DESIGN STAGE ONLY)

THE CITY OF LOS ANGELES OR IT'S OFFICERS OR AGENTS SHALL NOT BE RESPONSIBLE FOR THE ACCURACY OR COMPLETENESS OF ELECTRONIC COPIES OF THIS PLAN SHEET.

TTLB TEMPLATE REVISION DATE: 02/2013
SHEET ISSUE DATE: 07/03/18
FILE PATH: BIM 360://Granada Hills Pool Renovation/P_Granada-Hills_2017-msl.rvt

PLOTTED:7/16/2020 1:50:12 PM

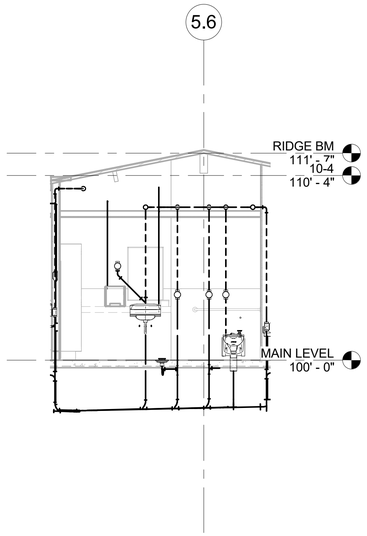

2C SECTION A

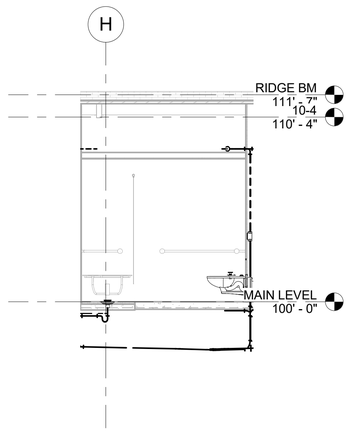

2B SECTION B

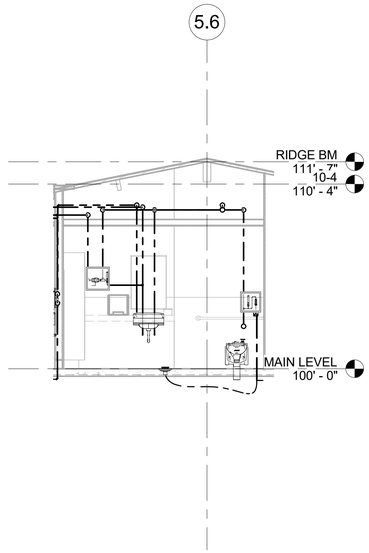

1C SECTION A

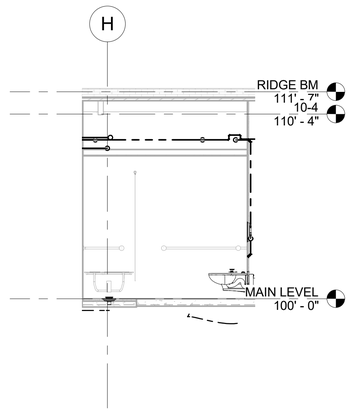

1B SECTION B

NOTES:

- TRAP PRIMERS SERVING MORE THAN ONE FIXTURE SHALL BE PROVIDED WITH A DISTRIBUTION UNIT AND A SEPERATE LINE SHALL BE PROVIDED TO EACH FIXTURE FROM THE TRAP PRIMER.
- DOMESTIC WATER PIPING TO EACH FIXTURE SHALL BE RUN INDIVIDUALLY FROM EACH BRANCH. DO NOT RUN HORIZONTALLY BETWEEN THE STUDS FROM FIXTURE TO FIXTURE. SEE RISER DIAGRAM FOR PIPE SIZES.

1. 2"V, 4"W AND 2"CW
2. 1-1/2"V, 2"W AND 2"CW
3. 1-1/2"V, 2"W AND 3/4"CW
4. 1-1/2"V, 3"W, 3/4"CW AND HW
5. 1-1/2"V, 2"W AND 3/4"ATP
6. 2"V, 4"W AND 3/4"ATP
7. 3/4"CW
8. WHA-1 BEHIND ACCESS PANEL
9. ATP-1 BEHIND ACCESS PANEL
10. DN AND CONNECTION TO FIXTURES
11. ZONE OR FLOOR SOV BEHIND ACCESS PANEL
12. SOV BEHIND ACCESS PANEL (5-7 FEET ABOVE FINISHED FLOOR, INSIDE A MIN. 6"PLUMBING WALL
13. CD DN CONNECT TO SINK TAILPIECE, SEE FOR DETAILS
14. CD DN AND SPILL INTO SERVICE SINK
15. PROVIDE 8" PLUMBING WALL
16. PROVIDE 14" PLUMBING WALL
17. SEE AQUATIC DWG. MR-1 FOR CONTINUATION

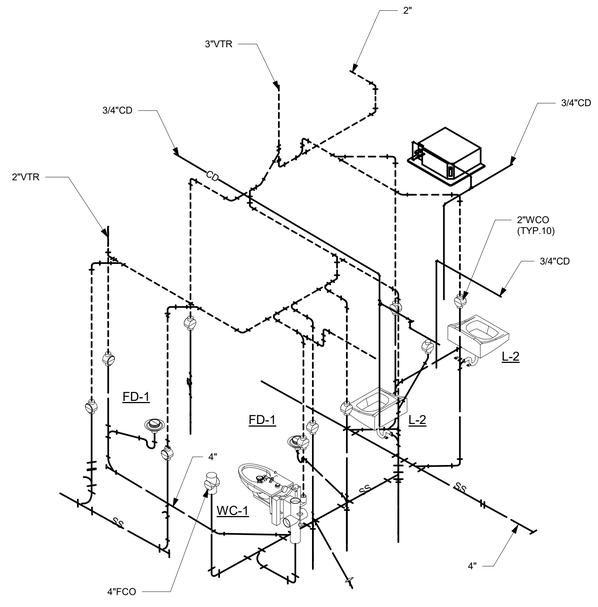

2D ISOMETRIC VIEW

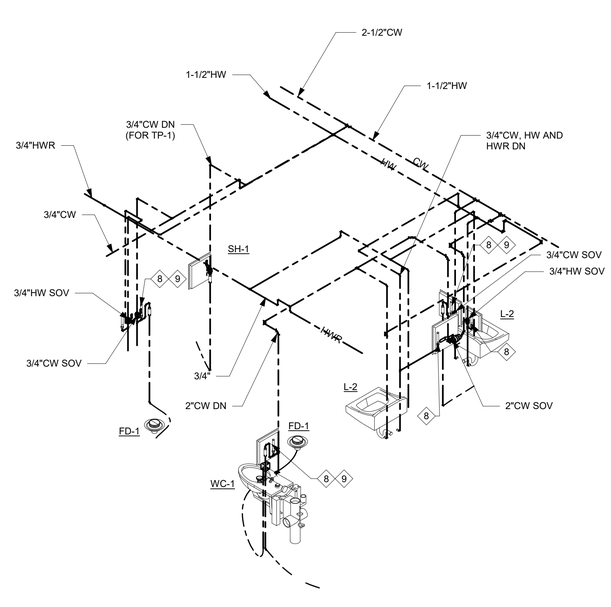

1D ISOMETRIC VIEW

2 STAFF RR (104) - WASTE PIPING LAYOUT

Scale: 1/4"=1'-0"

1 STAFF RR (104) - WATER PIPING LAYOUT

Scale: 1/4"=1'-0"

BUREAU OF ENGINEERING
OFFICIAL RECORD

ENGINEERING
CITY OF LOS ANGELES

BUREAU OF ENGINEERING

NO.	REVISION DESCRIPTION	DATE	BY

BUILDING NO. -

INDEX NO. RP-300118

REGISTERED PROFESSIONAL ENGINEER JAMES H. SHWE No. 26903 (Retired 9/30/20) MECHANICAL STATE OF CALIFORNIA

CITY OF LOS ANGELES

DEPARTMENT OF PUBLIC WORKS

GARY LEE MOORE, PE, ENV SP CITY ENGINEER DATE: 07/15/20

ARCHITECTURAL DIVISION

ARCHITECT/ENGINEER: JAMES H. SHWE LIC. NO.: M26903 07/15/20

DESIGNED BY: MAROKO & SHWE, INC. 07/15/20

DRAWN BY: E.N, R.N

CHECKED BY: J.S 07/15/20

APPROVED BY: Approver

BID SET
PROJECT ISSUE DATE: 06/22/21

CITY OF LOS ANGELES

VERTICAL CONTROL:
HORIZONTAL CONTROL:

SHEET TITLE: STAFF RR (104) - PLUMBING PIPING LAYOUT

PROJECT: GRANADA HILLS POOL AND BATHHOUSE REPLACEMENT PROJECT

ADDRESS: 16730 CHATSWORTH STREET GRANADA HILLS, CA 91344

WORK ORDER NO. #E170517

PLAN FILE NO.

DRAWING NO. P3.18

SHEET OF SHEETS

PLOTTED:7/16/2020 1:50:41 PM

THE CITY OF LOS ANGELES OR ITS OFFICERS OR AGENTS SHALL NOT BE RESPONSIBLE FOR THE ACCURACY OR COMPLETENESS OF ELECTRONIC COPIES OF THIS PLAN SHEET.

REVISION DATES (DESIGN STAGE ONLY)

TTLB TEMPLATE REVISION DATE: 02/2013
SHEET ISSUE DATE: 01/30/18

FILE PATH: BIM 360://Granada Hills Pool Renovation/P_Granada-Hills_2017-msi.rvt

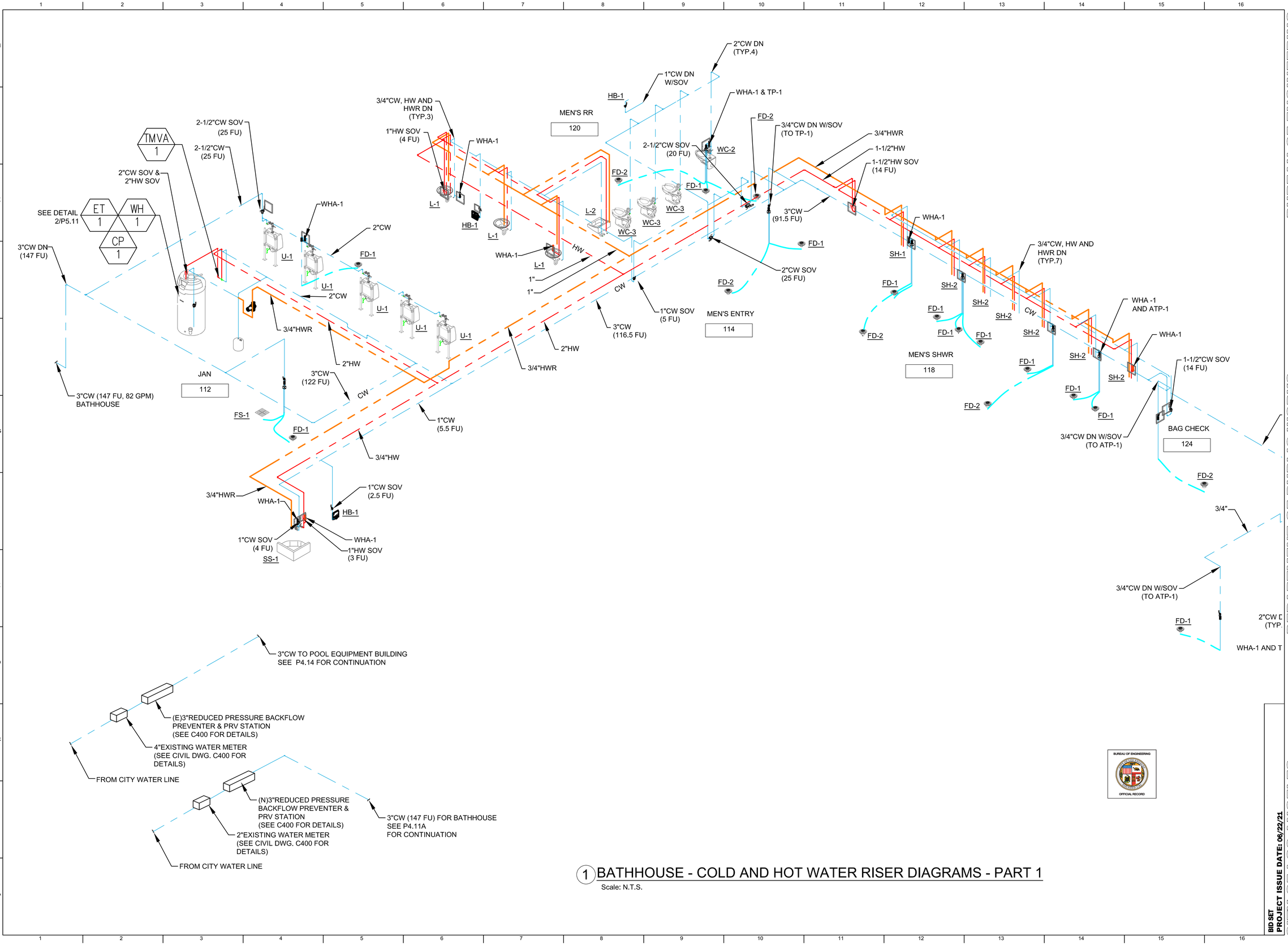

1 BATHHOUSE - COLD AND HOT WATER RISER DIAGRAMS - PART 1

Scale: N.T.S.

THE CITY OF LOS ANGELES OR ITS OFFICERS OR AGENTS SHALL NOT BE RESPONSIBLE FOR THE ACCURACY OR COMPLETENESS OF ELECTRONIC COPIES OF THIS PLAN SHEET.

FILE PATH: D:\Revit Local Files\Granada Hills_Pool Renovation\P_Granada-Hills_2017_Local_EN_2019-05-20.rvt

SHEET ISSUE DATE: 06 JULY 2020

REVISION DATES (DESIGN & PHASE ONLY)

BUREAU OF ENGINEERING

OFFICIAL RECORD

BUREAU OF ENGINEERING

ENGINEERING
CITY OF LOS ANGELES

NO.	REVISION DESCRIPTION	DATE	BY

BUILDING NO. -

INDEX NO. RP-300118

DEPARTMENT OF PUBLIC WORKS

CITY OF LOS ANGELES

GARY LEE MOORE, PE, ENV SP — CITY ENGINEER — DATE:

ARCHITECTURAL DIVISION	LIC. NO.: M26903	07/15/20
ARCHITECT/ENGINEER: JAMES H. SHWE		07/15/20
DESIGNED BY: MAROKO & SHWE, INC.		07/15/20
DRAWN BY: E.N, R.N		07/15/20
CHECKED BY: J.S		07/15/20
APPROVED BY:		

VERTICAL CONTROL:

HORIZONTAL CONTROL:

SHEET TITLE: BATHHOUSE - COLD AND HOT WATER RISER DIAGRAMS - PART 1

PROJECT: GRANADA HILLS POOL AND BATHHOUSE REPLACEMENT PROJECT

ADDRESS: 16730 CHATSWORTH STREET GRANADA HILLS, CA 91344

BID SET

PROJECT ISSUE DATE: 06/22/21

WORK ORDER NO. #E170517

PLAN FILE NO.

DRAWING NO. P4.11A

SHEET - OF SHEETS -

PLOTTED:

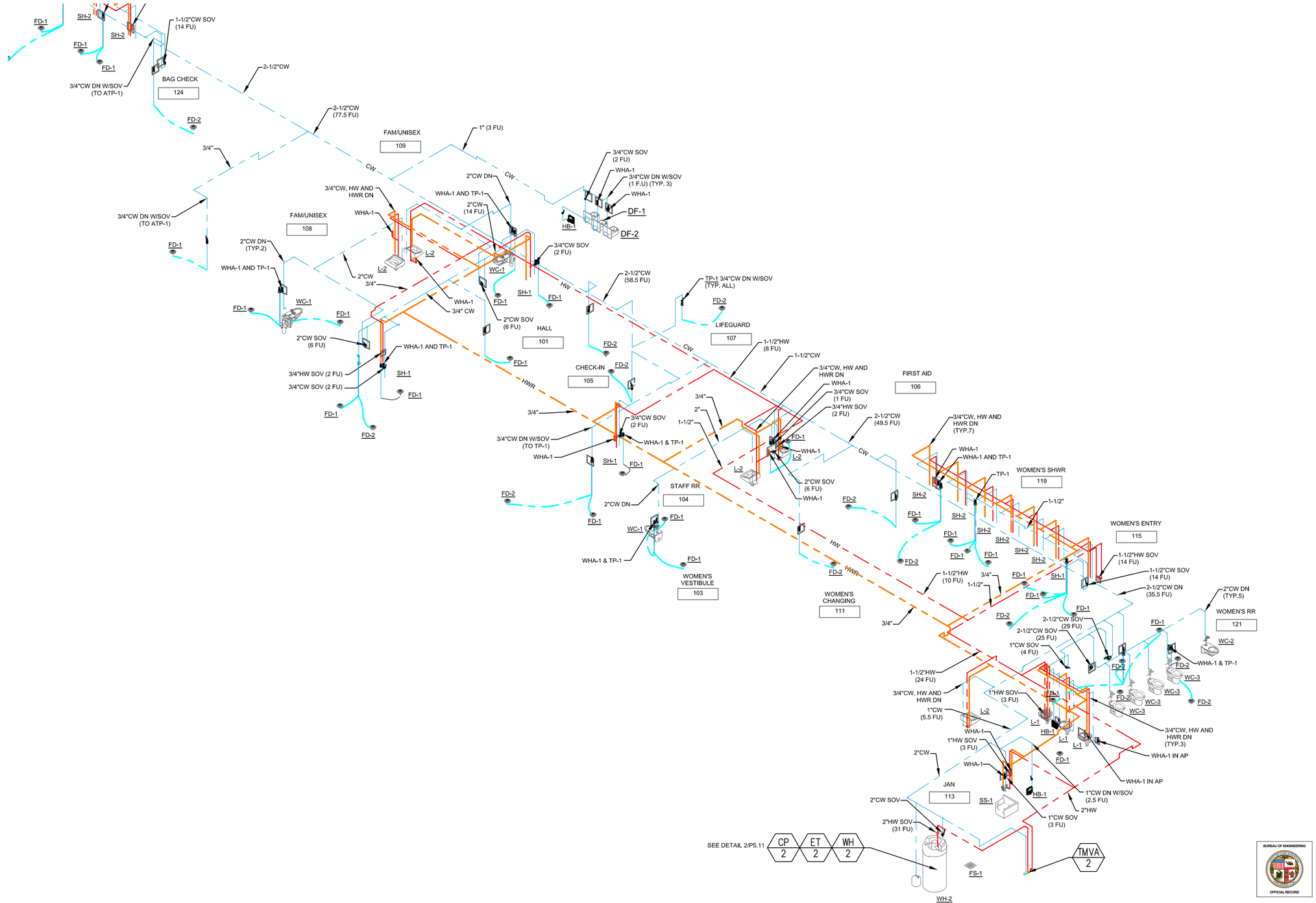

1 BATHHOUSE - COLD AND HOT WATER RISER DIAGRAMS - PART 2

Scale: N.T.S.

THE CITY OF LOS ANGELES OR ITS OFFICERS OR AGENTS SHALL NOT BE RESPONSIBLE FOR THE ACCURACY OR COMPLETENESS OF ELECTRONIC COPIES OF THIS PLAN SHEET.

FILE PATH: D:\Revit Local Files\Granada Hills_Pool Renovation\P_Granada-Hills_2017_Local_EN_2019-05-20.rvt

SHEET ISSUE DATE: 5 JULY 2020

REVISION DATES (DESIGN STAGE ONLY)

BUREAU OF ENGINEERING

DEPARTMENT OF PUBLIC WORKS

CITY OF LOS ANGELES

ENGINEERING

CITY OF LOS ANGELES

NO.	REVISION DESCRIPTION	DATE	BY

INDEX NO. RP-300118

BUILDING NO. -

CITY ENGINEER: GARY LEE MOORE, PE, ENV SP — DATE: 07/15/20

ARCHITECT/ENGINEER: JAMES H. SHWE — LIC. NO.: M26903 — DATE: 07/15/20

DESIGNED BY: MAROKO & SHWE, INC. — DATE: 07/15/20

DRAWN BY: E.N, R.N — DATE: 07/15/20

CHECKED BY: J.S — DATE: 07/15/20

APPROVED BY: — DATE:

VERTICAL CONTROL:

HORIZONTAL CONTROL:

SHEET TITLE: BATHHOUSE - COLD AND HOT WATER RISER DIAGRAMS - PART 2

PROJECT: GRANADA HILLS POOL AND BATHHOUSE REPLACEMENT PROJECT

ADDRESS: 16730 CHATSWORTH STREET GRANADA HILLS, CA 91344

BID SET

PROJECT ISSUE DATE: 06/22/21

WORK ORDER NO. #E170517

PLAN FILE NO.

DRAWING NO. P4.11B

SHEET - OF SHEETS -

PLOTTED:

OFFICIAL RECORD

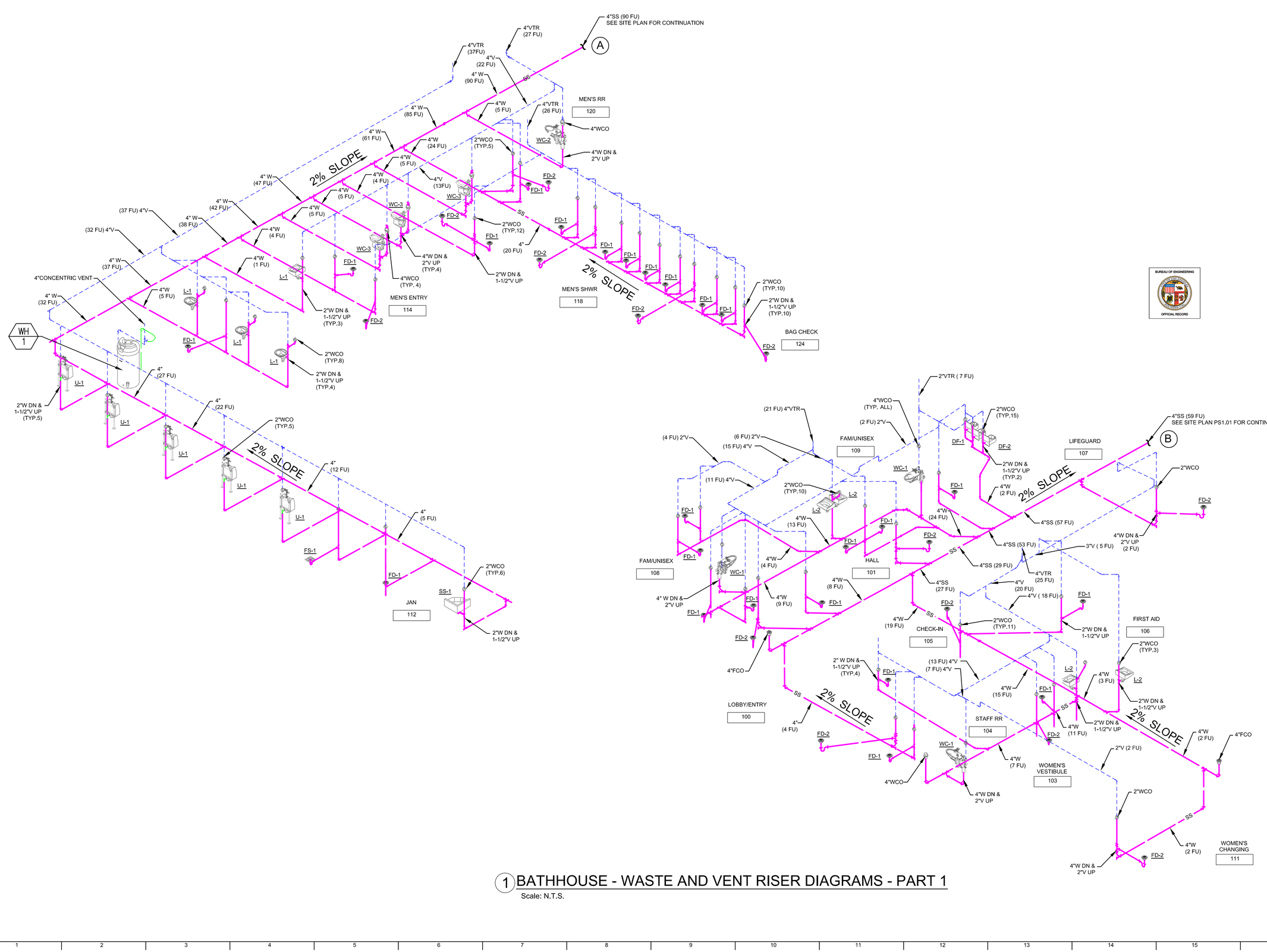

1 BATHHOUSE - WASTE AND VENT RISER DIAGRAMS - PART 1

Scale: N.T.S.

THE CITY OF LOS ANGELES OR ITS OFFICERS OR AGENTS SHALL NOT BE RESPONSIBLE FOR THE ACCURACY OR COMPLETENESS OF ELECTRONIC COPIES OF THIS PLAN SHEET.

SHEET ISSUE DATE: 15 JULY 2020 FILE PATH:

REVISION DATES (DESIGN STAGE ONLY)

DEPARTMENT OF PUBLIC WORKS
BUREAU OF ENGINEERING
CITY OF LOS ANGELES

ENGINEERING
CITY OF LOS ANGELES

NO.	REVISION DESCRIPTION	DATE	BY

INDEX NO. RP-300118
BUILDING NO. -

BUREAU OF ENGINEERING
OFFICIAL RECORD

REGISTERED PROFESSIONAL ENGINEER
No. 26903
Expires 9/30/21
STATE OF CALIFORNIA
CIVIL

CITY ENGINEER: GARY LEE MOORE, PE, ENV SP
DATE: 07/15/20
ARCHITECTURAL DIVISION
ARCHITECT/ENGINEER: JAMES H. SHWE LIC. NO.: M26903
DESIGNED BY: MAROKO & SHWE, INC.
DRAWN BY: E.N, R.N
CHECKED BY: J.S
APPROVED BY:

BID SET
PROJECT ISSUE DATE: 06/22/21

VERTICAL CONTROL:
HORIZONTAL CONTROL:

SHEET TITLE: BATHHOUSE - WASTE AND VENT RISER DIAGRAMS - PART 1
PROJECT: GRANADA HILLS POOL AND BATHHOUSE REPLACEMENT PROJECT
ADDRESS: 16730 CHATSWORTH STREET GRANADA HILLS, CA 91344

WORK ORDER NO. #E170517
PLAN FILE NO.
DRAWING NO. P4.12A
SHEET - OF SHEETS -

PLOTTED:

D:\170\Documents (WB-1 Files)\Drawings\P4.12A.dwg

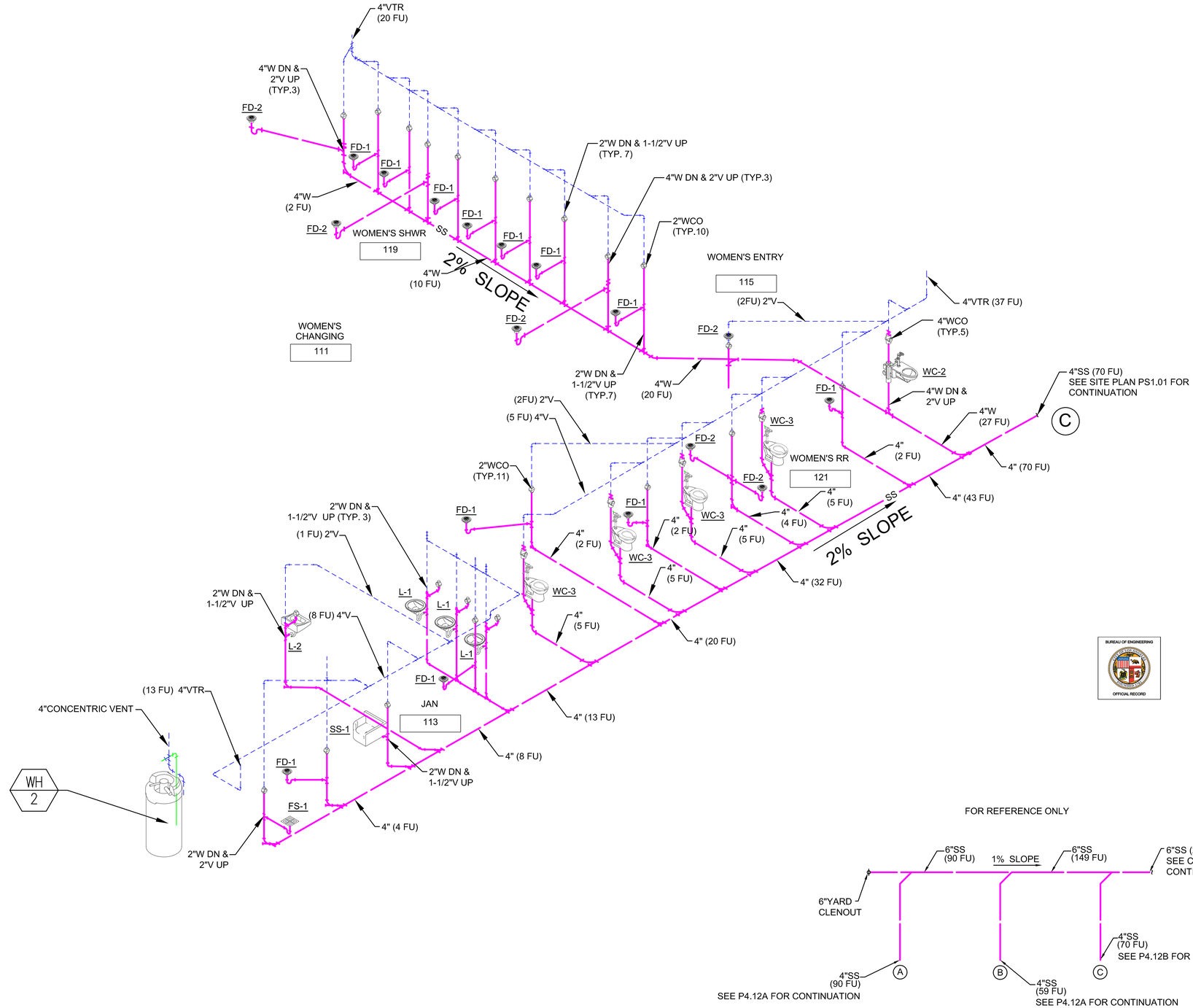

1 BATHHOUSE - WASTE AND VENT RISER DIAGRAMS - PART 2

Scale: N.T.S.

THE CITY OF LOS ANGELES OR ITS OFFICERS OR AGENTS SHALL NOT BE RESPONSIBLE FOR THE ACCURACY OR COMPLETENESS OF ELECTRONIC COPIES OF THIS PLAN SHEET.

SHEET ISSUE DATE: 15 JULY 2020 FILE PATH:

REVISION DATES (DESIGN STAGE ONLY)

BID SET
PROJECT ISSUE DATE: 06/22/21

CITY OF LOS ANGELES

DEPARTMENT OF PUBLIC WORKS

BUREAU OF ENGINEERING

ENGINEERING CITY OF LOS ANGELES

NO.	REVISION DESCRIPTION	DATE	BY

INDEX NO. RP-300118

BUILDING NO. -

GARY LEE MOORE, PE, ENV SP
ARCHITECTURAL DIVISION
CITY ENGINEER
DATE:

ARCHITECT/ENGINEER:	JAMES H. SHWE LIC. NO.: M26903	07/15/20
DESIGNED BY:	MAROKO & SHWE, INC.	07/15/20
DRAWN BY:	E.N, R.N	07/15/20
CHECKED BY:	J.S	07/15/20
APPROVED BY:		07/15/20

VERTICAL CONTROL:
HORIZONTAL CONTROL:

SHEET TITLE: BATHHOUSE - WASTE AND VENT RISER DIAGRAMS - PART 2

PROJECT: GRANADA HILLS POOL AND BATHHOUSE REPLACEMENT PROJECT

ADDRESS: 16730 CHATSWORTH STREET GRANADA HILLS, CA 91344

WORK ORDER NO. #E170517

PLAN FILE NO.

DRAWING NO. P4.12B

SHEET - OF SHEETS -

PLOTTED:

GAS	NATURAL	
INLET PRESSURE	LESS THAN 2 PSI	
PRESSURE DROP	0.5 IN. W.C.	
SPECIFIC GRAVITY	0.60	
PIPE SIZES BASED ON 250 LINEAL FEET DEVELOPED LENGTH		
PIPE SIZE	GAS LOAD (BTUH)	CFH
1/2"	30,000	30
3/4"	63,000	63
1"	119,000	119
1 1/4"	244,000	244
1 1/2"	366,000	366
2"	704,000	704
2 1/2"	1,120,000	1,120
3"	1,980,000	1,980
4"	4,050,000	4,050

TOTAL GAS LOAD = 1,160 CFH

TOTAL DEVELOPED LENGTH = 250'

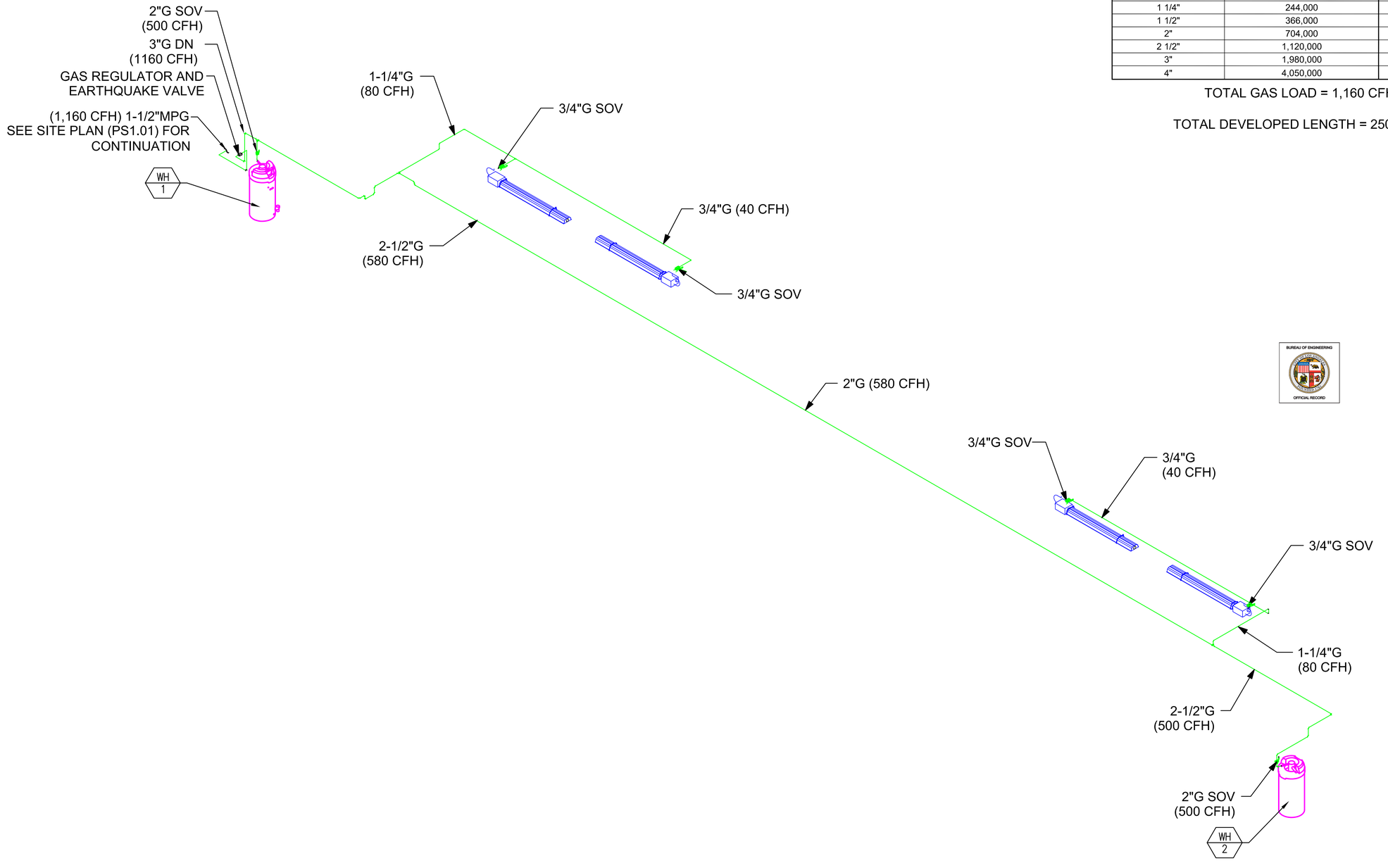

1 BATHHOUSE - GAS RISER DIAGRAMS

Scale: N.T.S.

THE CITY OF LOS ANGELES OR ITS OFFICERS OR AGENTS SHALL NOT BE RESPONSIBLE FOR THE ACCURACY OR COMPLETENESS OF ELECTRONIC COPIES OF THIS PLAN SHEET.

FILE PATH:

SHEET ISSUE DATE: 15 JULY 2020

REVISION DATES
DESIGN STAGE ONLY)

BUREAU OF ENGINEERING
OFFICIAL RECORD

BID SET
PROJECT ISSUE DATE: 06/22/21

CITY OF LOS ANGELES

VERTICAL CONTROL:
HORIZONTAL CONTROL:

SHEET TITLE: BATHHOUSE - GAS RISER DIAGRAMS

PROJECT: GRANADA HILLS POOL AND BATHHOUSE REPLACEMENT PROJECT

ADDRESS: 16730 CHATSWORTH STREET
GRANADA HILLS, CA 91344

WORK ORDER NO.
#E170517

PLAN FILE NO.

DRAWING NO.
P4.13

SHEET - TO - SHEETS -

PLOTTED:

DEPARTMENT OF PUBLIC WORKS

GARY LEE MOORE, PE, ENV SP
CITY ENGINEER

ARCHITECTURAL DIVISION

ARCHITECT/ENGINEER: JAMES H. SHWE LIC. NO.: M26903

DESIGNED BY: MAROKO & SHWE, INC.

DRAWN BY: E.N, R.N

CHECKED BY: J.S

APPROVED BY:

CITY ENGINEER
DATE: 07/15/20

BUREAU OF ENGINEERING

ENGINEERING
CITY OF LOS ANGELES

NO.	REVISION DESCRIPTION	DATE	BY

INDEX NO. RP-300118

BUILDING NO. -

REGISTERED PROFESSIONAL ENGINEER
JAMES H. SHWE
No. 26903
Exp. 9/30/21
STATE OF CALIFORNIA

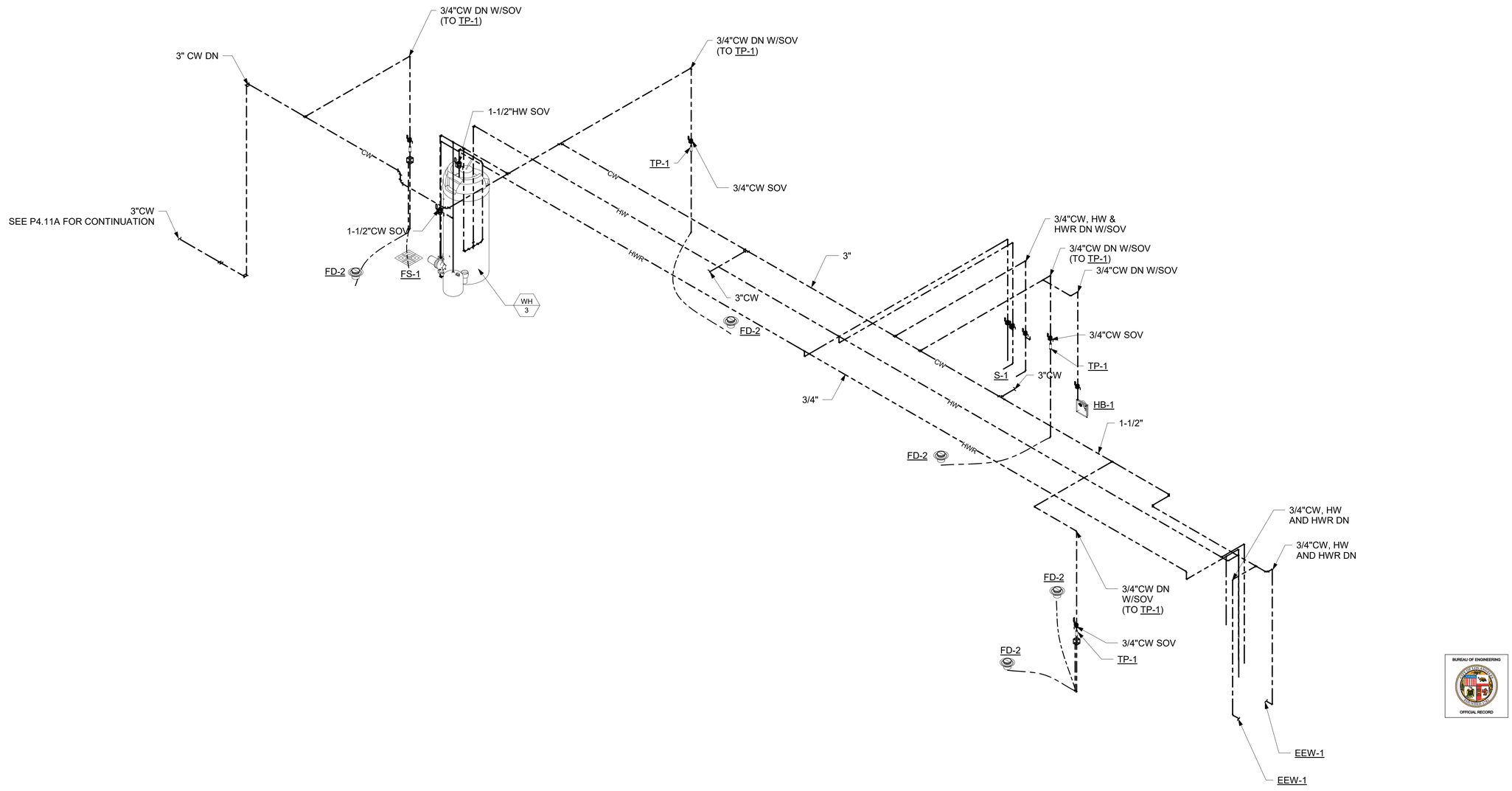

POOL EQUIPMENT BUILDING - COLD AND HOT WATER RISER DIAGRAMS

THE CITY OF LOS ANGELES OR ITS OFFICERS OR AGENTS SHALL NOT BE RESPONSIBLE FOR THE ACCURACY OR COMPLETENESS OF ELECTRONIC COPIES OF THIS PLAN SHEET.

TTLB TEMPLATE REVISION DATE: 02/2013
SHEET ISSUE DATE: 01/14/19
FILE PATH: BIM 360://Granada Hills Pool Renovation/P_Granada-Hills_2017-msi.rvt

REVISION DATES (DESIGN STAGE ONLY)

BUREAU OF ENGINEERING

ENGINEERING
CITY OF LOS ANGELES

NO.	REVISION DESCRIPTION	DATE	BY

BUILDING NO. -

INDEX NO. RP-300118

REGISTERED PROFESSIONAL ENGINEER JAMES H. SHWE No. 26903 (Retired 9/30/20) MECHANICAL STATE OF CALIFORNIA

BUREAU OF PUBLIC WORKS

DEPARTMENT OF PUBLIC WORKS

GARY LEE MOORE, PE, ENV SP CITY ENGINEER

		DATE:
ARCHITECTURAL DIVISION		
ARCHITECT/ENGINEER:	JAMES H. SHWE	LIC. NO.: M26903
DESIGNED BY:	MAROKO & SHWE, INC.	07/15/20
DRAWN BY:	E.N. R.N	07/15/20
CHECKED BY:	J.S	07/15/20
APPROVED BY:	Approver	

CITY OF LOS ANGELES

BID SET
PROJECT ISSUE DATE: 06/22/21

VERTICAL CONTROL:
HORIZONTAL CONTROL:

SHEET TITLE: POOL EQUIPMENT BUILDING - COLD AND HOT WATER RISER DIAGRAMS

PROJECT: GRANADA HILLS POOL AND BATHHOUSE REPLACEMENT PROJECT

ADDRESS: 16730 CHATSWORTH STREET GRANADA HILLS, CA 91344

WORK ORDER NO. #E170517

PLAN FILE NO.

DRAWING NO. P4.14

SHEET OF SHEETS

BUREAU OF ENGINEERING OFFICIAL RECORD

PLOTTED:7/16/2020 2:03:19 PM

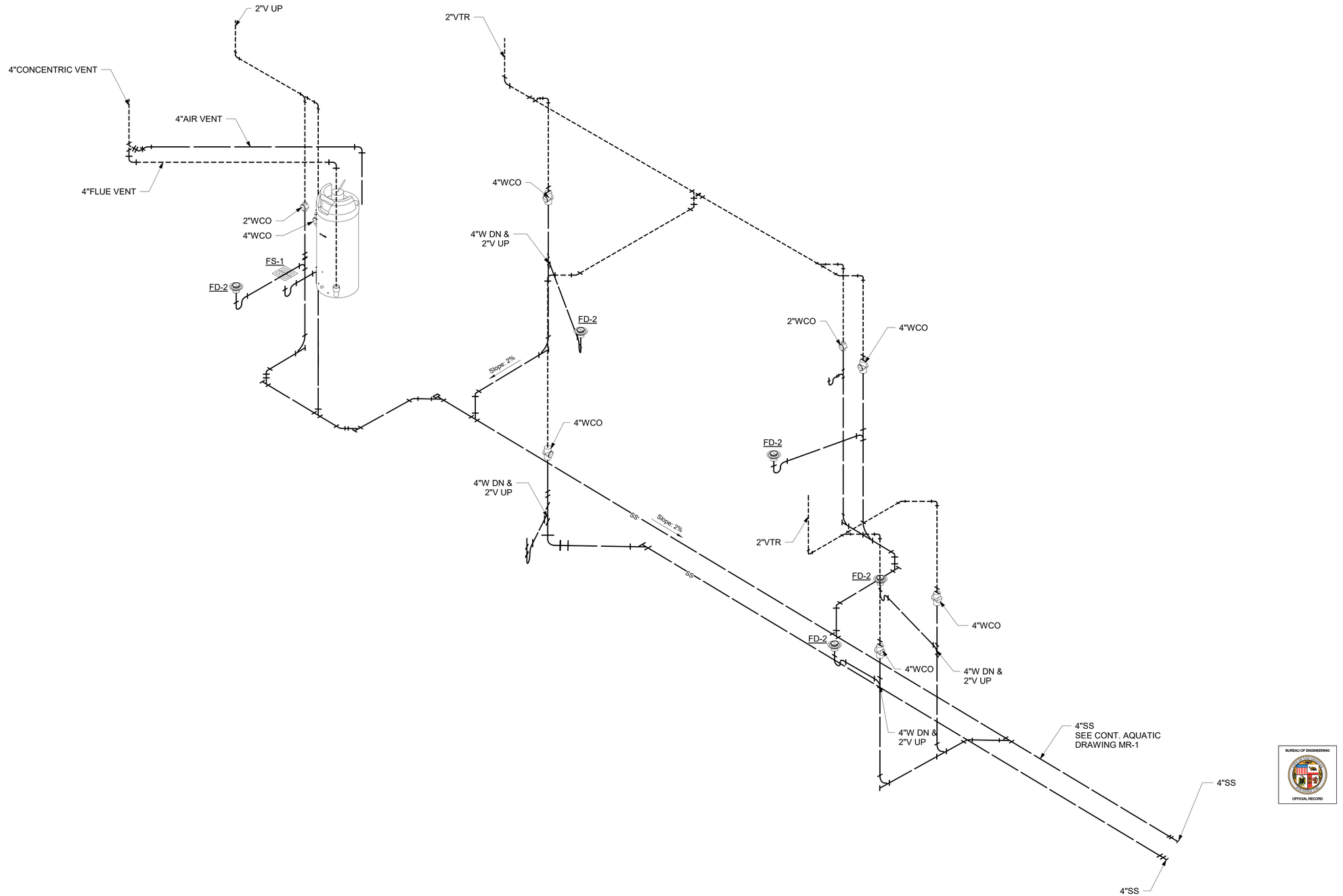

POOL EQUIPMENT BUILDING - WASTE AND VENT RISER DIAGRAMS

THE CITY OF LOS ANGELES OR ITS OFFICERS OR AGENTS SHALL NOT BE RESPONSIBLE FOR THE ACCURACY OR COMPLETENESS OF ELECTRONIC COPIES OF THIS PLAN SHEET.

TTLB TEMPLATE REVISION DATE: 02/2013
SHEET ISSUE DATE: 01/30/20
FILE PATH: BIM 360://Granada Hills Pool Renovation/P_Granada-Hills_2017-msl.rvt

REVISION DATES (DESIGN STAGE ONLY)

BUREAU OF ENGINEERING

NO.	REVISION DESCRIPTION	DATE	BY

BUILDING NO. -

INDEX NO. RP-300118

BUREAU OF PUBLIC WORKS

CITY OF LOS ANGELES

DEPARTMENT OF PUBLIC WORKS

ENGINEERING
CITY OF LOS ANGELES

REGISTERED PROFESSIONAL ENGINEER JAMES H. SHWE No. 26903 (Retired 9/30/20) MECHANICAL STATE OF CALIFORNIA

CITY ENGINEER	DATE:
	07/15/20
	07/15/20
	07/15/20
	07/15/20
	07/15/20

GARY LEE MOORE, PE, ENV SP
ARCHITECTURAL DIVISION

ARCHITECT/ENGINEER: JAMES H. SHWE LIC. NO.: M26903
DESIGNED BY: MAROKO & SHWE, INC.
DRAWN BY: E.N, R.N
CHECKED BY: J.S
APPROVED BY: Approver

BID SET
PROJECT ISSUE DATE: 06/22/21

VERTICAL CONTROL:
HORIZONTAL CONTROL:

SHEET TITLE: POOL EQUIPMENT BUILDING - WASTE AND VENT RISER DIAGRAMS

PROJECT: GRANADA HILLS POOL AND BATHHOUSE REPLACEMENT PROJECT

ADDRESS: 16730 CHATSWORTH STREET GRANADA HILLS, CA 91344

BUREAU OF ENGINEERING OFFICIAL RECORD

WORK ORDER NO. #E170517

PLAN FILE NO.

DRAWING NO. P4.15

SHEET 0 OF SHEETS

PLOTTED:7/16/2020 2:04:01 PM

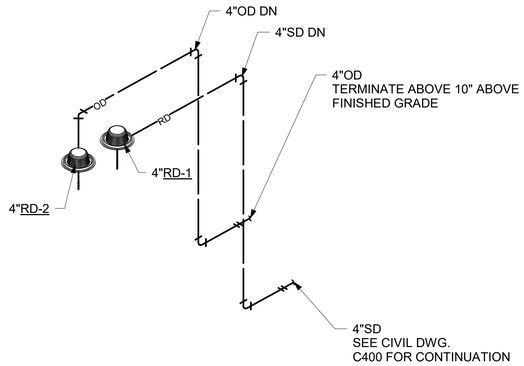

POOL EQUIPMENT BUILDING - STORM DRAIN RISER DIAGRAMS

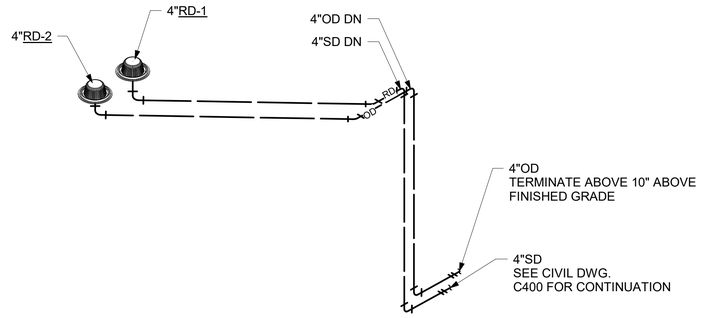

POOL EQUIPMENT BUILDING - GAS DRAIN RISER DIAGRAMS

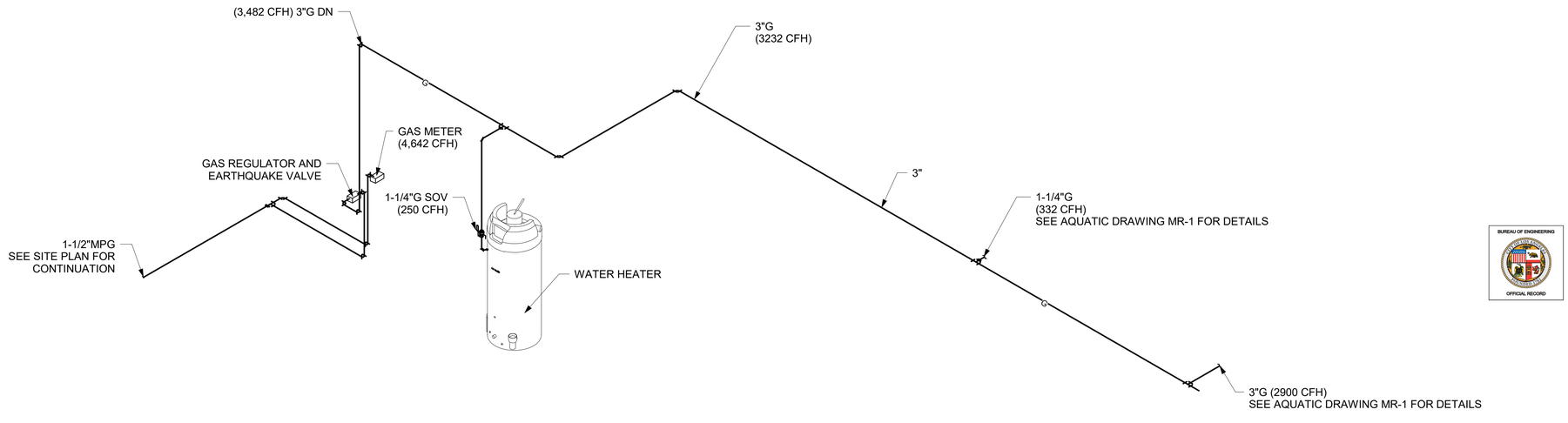

BUREAU OF ENGINEERING
OFFICIAL RECORD

THE CITY OF LOS ANGELES OR ITS OFFICERS OR AGENTS SHALL NOT BE RESPONSIBLE FOR THE ACCURACY OR COMPLETENESS OF ELECTRONIC COPIES OF THIS PLAN SHEET.

REVISION DATES
(DESIGN STAGE ONLY)

TTLB TEMPLATE REVISION DATE: 02/2013
SHEET ISSUE DATE: 03/17/20
FILE PATH: BIM 360://Granada Hills Pool Renovation/P_Granada-Hills_2017-msi.rvt

BUREAU OF ENGINEERING
ENGINEERING
CITY OF LOS ANGELES

NO.	REVISION DESCRIPTION	DATE	BY

BUILDING NO. -
INDEX NO. RP-300118

REGISTERED PROFESSIONAL ENGINEER
JAMES H. SHWE
No. 26903
(Renewal 9/30/20)
MECHANICAL
STATE OF CALIFORNIA

DEPARTMENT OF PUBLIC WORKS
CITY OF LOS ANGELES

GARY LEE MOORE, PE, ENV SP
CITY ENGINEER
DATE: 07/15/20

ARCHITECTURAL DIVISION
ARCHITECT/ENGINEER: JAMES H. SHWE LIC. NO.: M26903
DESIGNED BY: MAROKO & SHWE, INC.
DRAWN BY: E.N. R.N
CHECKED BY: J.S
APPROVED BY: Approver

VERTICAL CONTROL:
HORIZONTAL CONTROL:

SHEET TITLE: POOL EQUIPMENT BUILDING - GAS AND STORM DRAIN RISER DIAGRAMS

PROJECT: GRANADA HILLS POOL AND BATHHOUSE REPLACEMENT PROJECT

ADDRESS: 16730 CHATSWORTH STREET
GRANADA HILLS, CA 91344

BID SET
PROJECT ISSUE DATE: 06/22/21

WORK ORDER NO. #E170517
PLAN FILE NO.
DRAWING NO. P4.16
SHEET OF SHEETS

PLOTTED:7/16/2020 2:04:31 PM

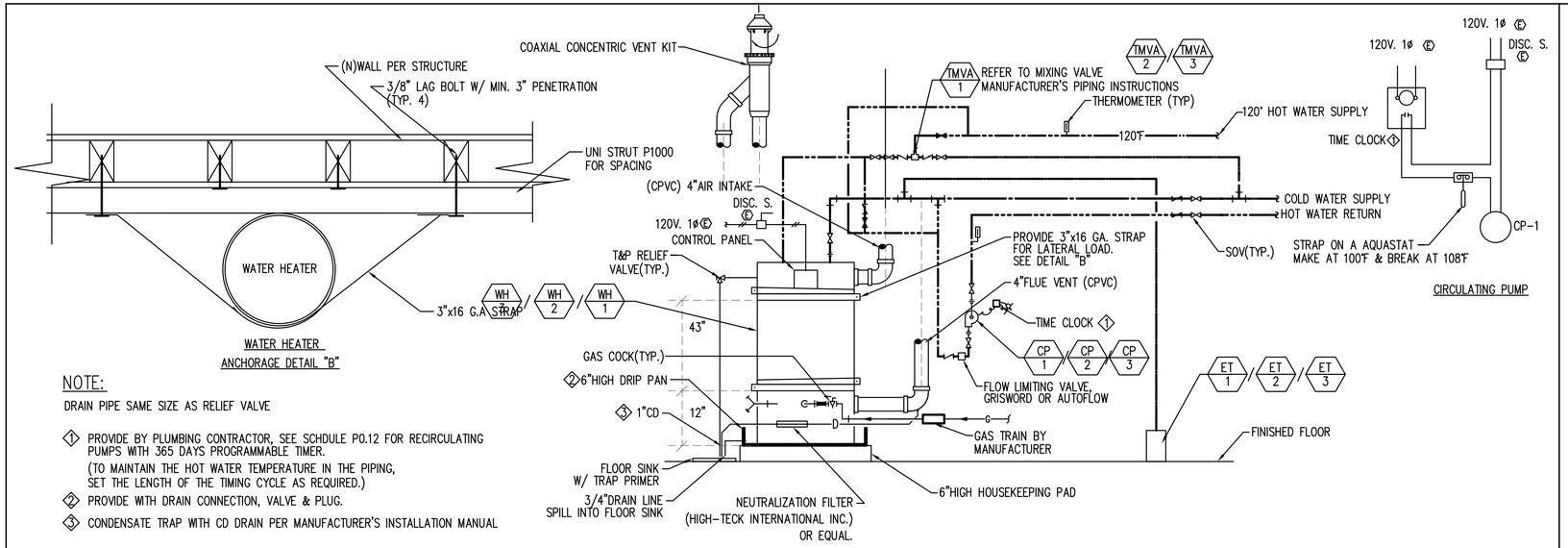

NOTE:

DRAIN PIPE SAME SIZE AS RELIEF VALVE

1. PROVIDE BY PLUMBING CONTRACTOR, SEE SCHDULE P0.12 FOR RECIRCULATING PUMPS WITH 365 DAYS PROGRAMMABLE TIMER. (TO MAINTAIN THE HOT WATER TEMPERATURE IN THE PIPING, SET THE LENGTH OF THE TIMING CYCLE AS REQUIRED.)
2. PROVIDE WITH DRAIN CONNECTION, VALVE & PLUG.
3. CONDENSATE TRAP WITH CD DRAIN PER MANUFACTURER'S INSTALLATION MANUAL

DOMESTIC WATER HEATER PIPING SCHEMATIC

SCALE NOT TO SCALE 3

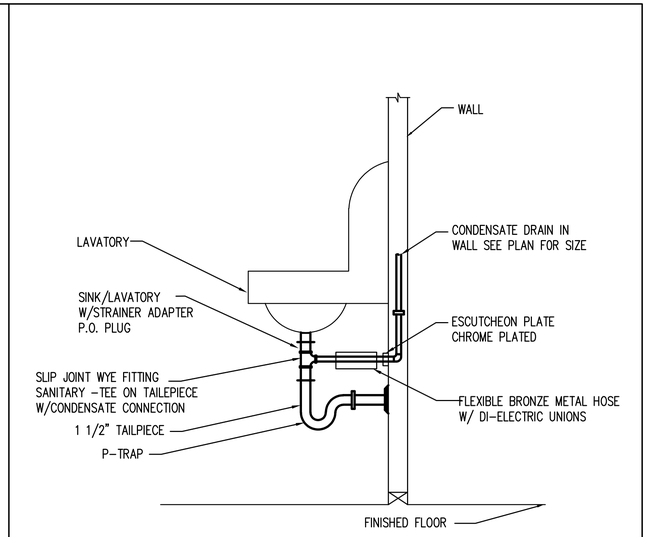

CONDENSATE DRAIN CONNECT TO FIXTURE TAILPIECE

SCALE NOT TO SCALE 1

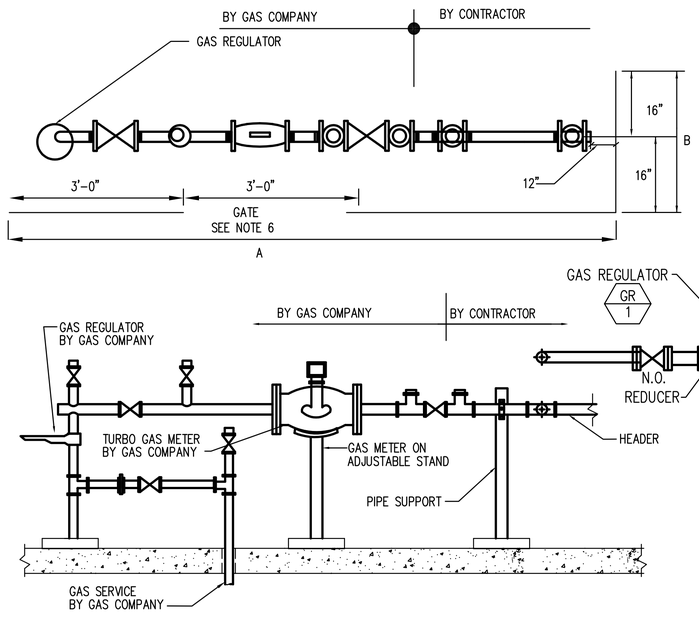

NOTES:

1. PRE-FABRICATED ANODELESS RISERS FOR 2" AND LARGER PIPE W/5'-0" EPOXY COATED STEEL MOUNTING . USE FOR METER & BUILDING RISERS
2. MAXIMUM GROUND LEVEL MARKER
3. INCREASE ENCLOSURE LENGTH TO ACCOMMODATE ANY ADDITIONAL BLDG LINE RISERS
4. SHOW SERVICE GAS VALVE IN EACH RISER IF THERE ARE MORE THAN ONE
5. SHOW ASPHALTIC PAVING OR DECOMPOSED GRANITE INSIDE THE ENCLOSURE. (CONCRETE IS NOT DESIRED)
6. NO LOCKING DEVICE SHOULD BE PROVIDED
7. INSPECT ALL PIPE FOR VISIBLE DEFECTS BEFORE AND DURING INSTALLATION

GAS METER ENCLOSURE (GUARD SHARK MODEL GS OR EQUAL)		
METER RANGE	400-1000 (CFH)	1001-25,000 (CFH)
A	9'-0"	12'-0"
B	3'-0"	4'-6"

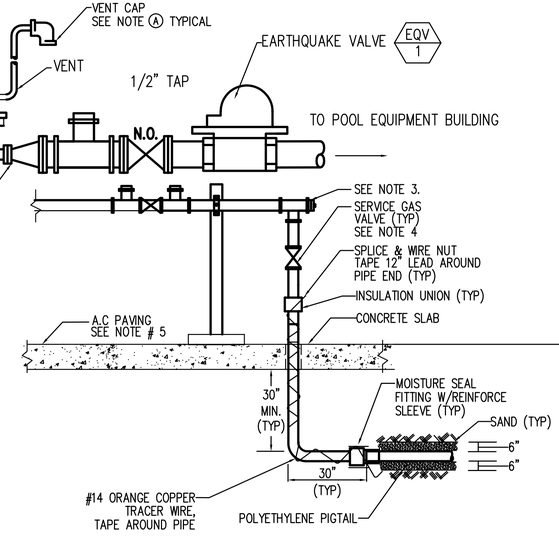

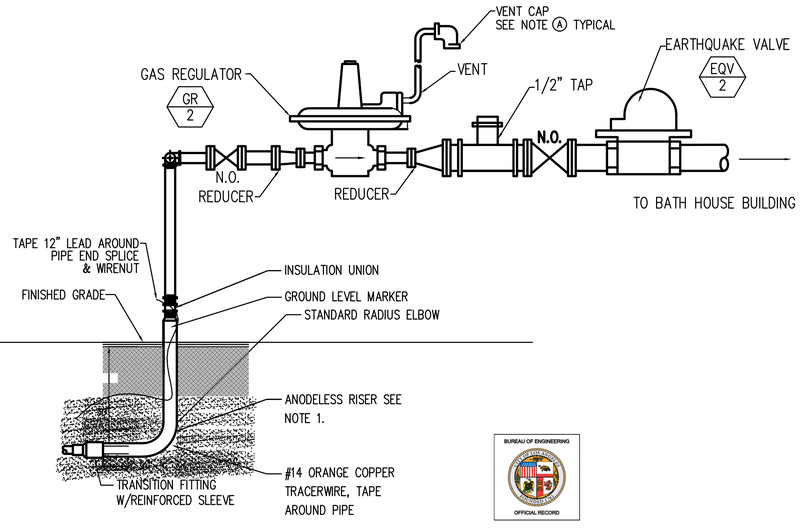

NOTES:

Ⓐ SCREENED VENT CAP (ROCKWELL MODEL 137) WITH SCREEN FACING DOWNWARDS.

1. PRE-FABRICATED ANODELESS RISERS FOR 2" AND LARGER PIPE W/5'-0" EPOXY COATED STEEL CASING. USE FOR METER & BUILDING RISERS
2. ALL PE PIPING SMALL MEET OR EXCEED CURRENT "UPC" INSTALLATION STANDARD & BE LISTED WITH UPC
3. ALL PE PIPING SHALL BE LAID ON SAND BED NOT LESS THAN 6" DEEP. PE PIPING SHALL BE COVERED WITH SEND NO LESS THAN 6" THICK.
4. PROVIDE ENCLOSURE TO AVOID TAMPERING. ALSO, INSTALL STABILIZER BRACKET (UNISTURT OR EQUIVALENT) TO PLUMBING WITHIN 6" OF VALVE AND SECURE TO THE BUILDING.

GAS PRESSURE REGULATOR W/EARTHQUAKE VALVE

SCALE NOT TO SCALE 2

THE CITY OF LOS ANGELES OR ITS OFFICERS OR AGENTS SHALL NOT BE RESPONSIBLE FOR THE ACCURACY OR COMPLETENESS OF ELECTRONIC COPIES OF THIS PLAN SHEET.

REVISION DATES (DESIGN STAGE ONLY)

SHEET ISSUE DATE: 15 JULY 2020 FILE PATH:

DEPARTMENT OF PUBLIC WORKS
BUREAU OF ENGINEERING
CITY OF LOS ANGELES
ENGINEERING

NO.	REVISION DESCRIPTION	DATE	BY

BUILDING NO. -

INDEX NO. RP-300118

CITY ENGINEER DATE:
GARY LEE MOORE, PE, ENV SP 07/15/20
ARCHITECTURAL DIVISION
ARCHITECT/ENGINEER: JAMES H. SHWE LIC. NO.: M28903 07/15/20
DESIGNED BY: MAROKO & SHWE, INC. 07/15/20
DRAWN BY: S.C 07/15/20
CHECKED BY: J.S 07/15/20
APPROVED BY:

VERTICAL CONTROL:
HORIZONTAL CONTROL:

SHEET TITLE: DETAILS

PROJECT: GRANADA HILLS POOL AND BATHHOUSE REPLACEMENT PROJECT

ADDRESS: 16730 CHATSWORTH STREET GRANADA HILLS, CA 91344

BID SET
PROJECT ISSUE DATE: 08/22/21

WORK ORDER NO. #E170517

PLAN FILE NO.

DRAWING NO. P5.11

SHEET - OF -

PLOTTED:

BUREAU OF ENGINEERING OFFICIAL RECORD

Unauthorized reproduction prohibited

SYMBOL SCHEDULE

ALL SYMBOLS SHOWN ARE NOT NECESSARILY USED ON DRAWINGS

—T—	3/4"C, TELEPHONE CONDUIT W/ PULLCORD. U.N.O.		
—TV—	3/4"C, TELEVISION CONDUIT W/ PULLCORD. U.N.O.		
—FA—	3/4"C, FIRE ALARM SYSTEM CONDUIT AND WIRE. U.N.O. SEE FIRE ALARM PLANS		
—D—	3/4"C, DATA CONDUIT W/ CABLE. U.N.O.		
—CAM—	3/4"C, CAMERA CONDUIT W/ PULLCORD. U.N.O.		
—S—	3/4"C, SECURITY CONDUIT W/ CABLE. U.N.O.		
—G—	1/2"C-1#12G U.N.O.		
	1#12 GROUND WIRE - 1/2" CONDUIT, U.N.O.		
	1#12 GROUND WIRE AND 1#12 ISOLATED GROUND WIRE, U.N.O.		
	HOME RUN. U.N.O.		
	CONDUIT CONCEALED IN WALL OR CEILING. U.N.O.		
	CONDUIT CONCEALED IN FLOOR, UNDERGROUND, OR UNDER FLOOR. U.N.O.		
///	3#12 W - 3/4" CONDUIT	////	6#12 W - 3/4" CONDUIT
////	4#12 W - 3/4" CONDUIT	/////	7#12 W - 3/4" CONDUIT
/////	5#12 W - 3/4" CONDUIT	//////	8#12 W - 1" CONDUIT
○	CONDUIT UP	UNO	UNLESS NOTED OTHERWISE
○	CONDUIT DOWN	VL	VERIFY LOCATION
AFF	ABOVE FINISHED FLOOR	WP	WEATHER PROOF
AL	ALUMINUM CONDUCTORS	E	EXISTING TO REMAIN
℄	CENTER LINE	ER	EXISTING TO BE RELOCATED
CO	CONDUIT ONLY	GFCI	GROUND FAULT CIRCUIT INTERRUPTER
CU	COPPER CONDUCTORS	EM	EMERGENCY
NTS	NOT TO SCALE		

FLOOR	WALL	CEILING	DESCRIPTION
			RECESSED LIGHT FIXTURE AND OUTLET
			FLUORESCENT LIGHT FIXTURE AND OUTLET - SURFACE
			FLUORESCENT RECESSED LIGHT FIXTURE AND OUTLET
			EMERGENCY FIXTURE
			EXIT LIGHT FIXTURE AND OUTLET
	$ab		SINGLE POLE TOGGLE SWITCH, +4'-0" U.N.O. SUBSCRIPT = OUTLETS CONTROLLED PROVIDE SW FOR EACH IN GANG ASSEMBLY
	$2		TWO POLE SWITCH, +4'-0" U.N.O.
			DIMMER SWITCH, +4'-0" U.N.O.
			DUPLEX RECEPTACLE, +18" TO CENTER LINE U.N.O.
⊙			FLOOR DUPLEX RECEPTACLE, FLUSH MOUNTED
			DOUBLE DUPLEX RECEPTACLE, +18" TO CENTER LINE U.N.O.
			DUPLEX RECEPTACLE, MOUNTED ABOVE COUNTERTOP
			DUPLEX RECEPT. ON EMERG. CIRCUIT, +18" TO CENTER LINE UNO
			DOUBLE DUPLEX RECEPT. ON EM. CKT, +18" TO CENTER LINE U.N.O.
			SPECIAL RECEPTACLE AS NOTED, +18" TO CENTER LINE U.N.O.
			SINGLE RECEPTACLE, +18" TO CENTER LINE U.N.O.
J	J	J	JUNCTION BOX
			TELEPHONE OUTLET, +18" TO CENTER LINE U.N.O.
			INTERCOM OUTLET, +18" TO CENTER LINE U.N.O.
			DATA/TEL. OUTLET, 18" TO CENTER LINE U.N.O.
			CLOCK OUTLET AND CLOCK
			P.A. SPEAKER
	VC		AREA SPEAKER VOLUME CONTROL
	M		MICROPHONE OUTLET
	T		THERMOSTAT
M	M		MOTOR
			DISTRIBUTION SWITCHBOARD
			PANELBOARD
			TERMINAL CABINET
			DISCONNECT SWITCH, UNFUSED U.N.O.
			DOUBLE THROW SWITCH, UNFUSED, U.N.O.
	1		MOTOR CONTROLLER, NO. INDICATES SIZE
	1		COMBINATION MOTOR CONTROLLER AND DISCONNECT SWITCH
	TV		TELEVISION OUTLET, +18" TO CENTER LINE U.N.O.
	T		CONTROL TRANSFORMER
			PUSH BUTTON
	DH		MAGNETIC DOOR RELEASE/HOLDER
			COMBINATION SMOKE FIRE DAMPER (CSFD)
			SECURITY MOTION DETECTOR
			DAYLIGHT SENSOR
$OS	OS	OS	OCCUPANCY SENSOR
	D		SECURITY DOOR CONTACTS
	$K		SECURITY OVERRIDE KEYPAD
			P.A. SPEAKER, VERIFY MOUNTING HEIGHT
	C		SECURITY CAMERA

P.V. SYSTEM COMPONENTS

PROVIDE A DESIGN-BUILT FULLY ENGINEERED AND PERMITTED PHOTOVOLTAIC SYSTEMS WITH ALL THE COMPONENTS FOR A COMPLETE AND FULLY OPERABLE P.V. SYSTEM. COMPLY WITH CEC 2016, ART 690

BASIC COMPONENTS OF GRID-CONNECTED PV SYSTEMS WITHOUT BATTERIES ARE:

- SOLAR PHOTOVOLTAIC MODULES
- ARRAY MOUNTING RACKS
- GROUNDING EQUIPMENT
- COMBINER BOX
- SURGE PROTECTION (OFTEN PART OF THE COMBINER BOX)
- INVERTER
- METERS – SYSTEM METER AND KILOWATT-HOUR METER
- DISCONNECTS:
  - ARRAY DC DISCONNECT
  - INVERTER DC DISCONNECT
  - INVERTER AC DISCONNECT
  - EXTERIOR AC DISCONNECT
  - RAPID SHUT DOWN DISCONNECT

SCOPE OF WORK:

1. RENOVATION OF THE EXISTING BATHHOUSE
   a. NEW LIGHTING, CIRCUITING, CONTROLS
   b. NEW RECEPTACLE
   c. NEW POWER TO MISC. EQUIPMENT
2. NEW POOL EQUIPMENT ROOM.
3. NEW POOL DECK LIGHTING.
4. NEW PANELBOARDS, TRANSFORMERS, POWER DISTRIBUTION.
5. NEW FEEDER WIRES TO EXISTING PARK MAIN SWITCHBOARD.

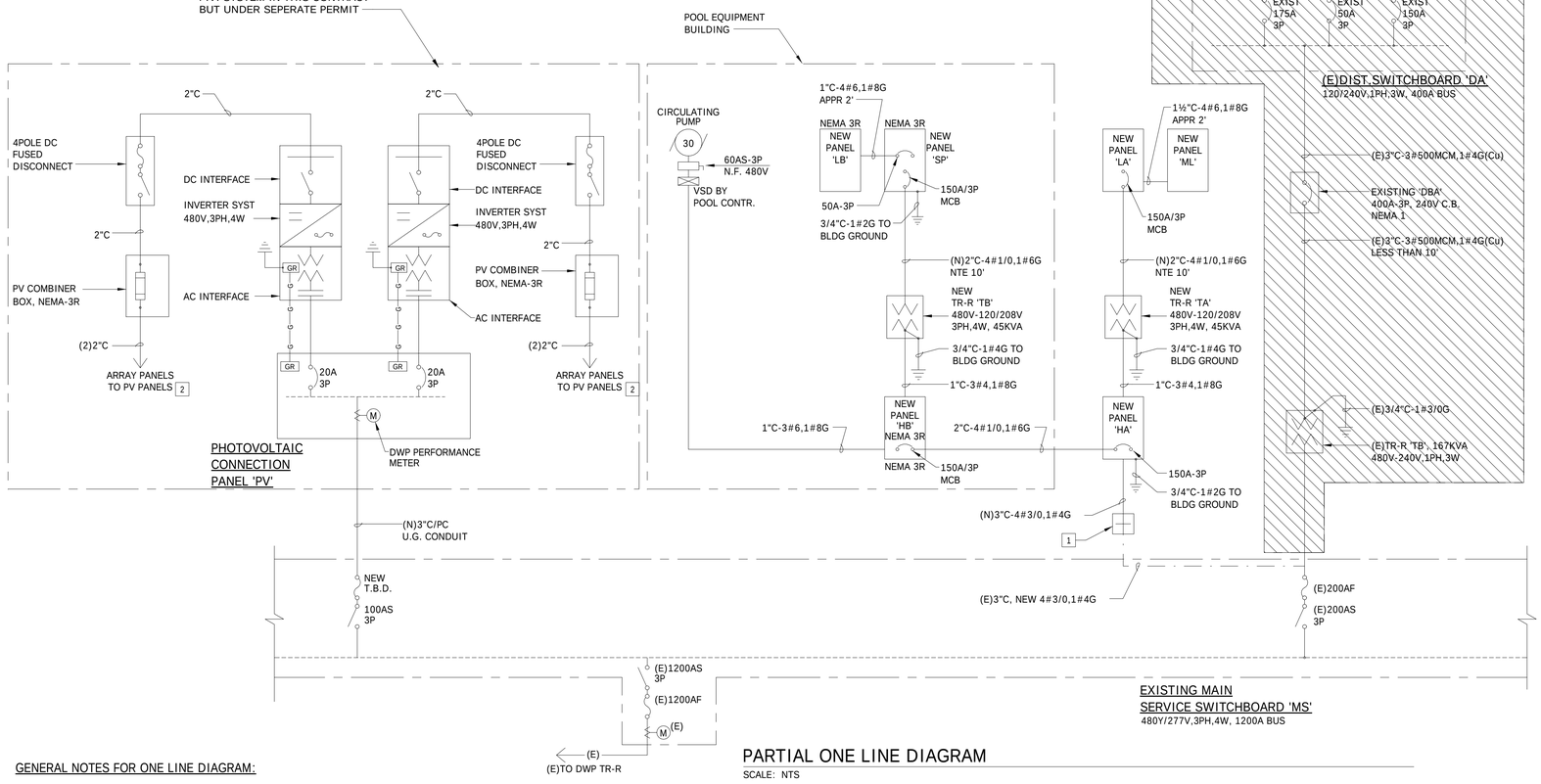

PARTIAL ONE LINE DIAGRAM

SCALE: NTS

GENERAL NOTES FOR ONE LINE DIAGRAM:

1. ALL CONDUCTORS SHALL BE COPPER, THHN/THWN TYPE, RATED 75°C, 600V.
2. ALL TERMINAL LUGS ON ELECTRICAL EQUIPMENT AND CIRCUIT BREAKERS SHALL BE RATED FOR USE WITH 75°C WIRES.
3. ALL ELECTRICAL EQUIPMENT SHALL BE UL LISTED, OR LISTED BY CITY OF L.A. RECOGNIZED TESTING FACILITY OR APPROVED BY THE DEPARTMENT.
4. ELECTRICAL INSTALLATION SHALL BE IN ACCORDANCE WITH ANSI/NECA ELECTRICAL INSTALLATION STANDARDS.
5. FUSES SHALL BE PROVIDED WITH REJECTION TYPE FUSE HOLDERS.
6. NO PIPING, DUCTS OR EQUIPMENT FOREIGN TO ELECTRICAL EQUIPMENT SHALL BE PERMITTED TO BE LOCATED WITHIN THE DEDICATED SPACE ABOVE THE ELECTRICAL EQUIPMENT.
7. ELECTRICAL TESTING SHALL BE IN ACCORDANCE WITH NETA ELECTRICAL TESTING RECOMMENDATIONS.
8. ALL ELECTRICAL DESIGN, INSTALLATION AND EQUIPMENT SHALL CONFORM TO THE REQUIREMENTS OF CALIFORNIA ELECTRICAL CODE, 2016 EDITION, AND 2017 L.A. CITY ELECTRICAL CODE.
9. FIELD MARK ALL ELECTRICAL EQUIPMENT THAT ARE LIKELY TO REQUIRE EXAMINATION SERVICING WHILE ENERGIZED, WITH A SIGN TO WARN QUALIFIED PERSONS OF POTENTIAL ELECTRIC ARC FLASH HAZARD. COMPLY WITH CEC 2016 ART 110.16.

SPECIFIC NOTES:

1 LOCATE EXISTING U.G. CONDUIT TO THE OLD POOL SWBD 'DA'. INTERCEPT AND RE-ROUTE TO THE NEW PANEL 'HA'. PULL OUT OLD WIRES, PULL IN ALL NEW WIRES. PROVIDE PULL BOXES AS REQUIRED. SUBJECT TO FIELD COORDINATION.

2 PROVIDE RAPID SHUTDOWN DEVICE OF THE PV SYSTEM WITHIN 10' FROM PV ARRAY. COMPLY WITH 2016 CEC, ART 690-12

BUREAU OF ENGINEERING OFFICIAL RECORD

No. 012941 Exp. 3-31-21 ELECTRICAL STATE OF CALIFORNIA

SILVER,ROTH & ASSOCIATES INC.
CONSULTING ELECTRICAL ENGINEERS
5 1 1 SOUTH FAIRFAX AVENUE
LOS ANGELES, CALIFORNIA, 90036-3130
TEL: (323) 933-3700 / FAX: (323) 933-3874
EMAIL: sra@silverroth.com

CITY OF LOS ANGELES — DEPARTMENT OF PUBLIC WORKS — BUREAU OF ENGINEERING

CITY OF LOS ANGELES ENGINEERING

GARY LEE MOORE, PE, ENV SP — CITY ENGINEER

ARCHITECTURAL DIVISION — LIC. NO.: 012941

NO.	REVISION DESCRIPTION	DATE	BY

BUILDING NO. -

INDEX NO. RP-300118

ARCHITECT/ENGINEER:	Silver Roth & Assoc.
DESIGNED BY:	Felix Roth
DRAWN BY:	Felix Roth
CHECKED BY:	Felix Roth
APPROVED BY:	Approver

CITY ENGINEER DATE: Issue Date. Issue Date. Issue Date. Issue Date. Issue Date. Issue Date.

VERTICAL CONTROL:
HORIZONTAL CONTROL:

SHEET TITLE: ONE LINE DIAGRAM AND SYMBOL SCHEDULE

PROJECT: GRANADA HILLS POOL AND BATHOUSE REPLACEMENT PROJECT

ADDRESS: 16730 CHATSWORTH STREET GRANADA HILLS, CA 91344

BID SET
PROJECT DATE ISSUE: 06/22/21

WORK ORDER NO. #E170517

PLAN FILE NO.

DRAWING NO. E0.1

SHEET 0 OF SHEETS

PLOTTED:4/15/2020 11:00:59 AM

THE CITY OF LOS ANGELES OR ITS OFFICERS OR AGENTS SHALL NOT BE RESPONSIBLE FOR THE ACCURACY OR COMPLETENESS OF ELECTRONIC COPIES OF THIS PLAN SHEET.

TTLB TEMPLATE REVISION DATE: 02/2013
SHEET ISSUE DATE: 11/11/18
FILE PATH: C:\Users\dcard\Documents\E_Granada-Hills_2017_SilverRoth.rvt

REVISION DATES (DESIGN STAGE ONLY)

PANEL: 'HA'

(NEW) PANEL VOLTAGE: 480/277 3 ϕ 4 W CIRCUIT CODE: blank or N : NON-CONTINUOUS
BUS: 200A L : LONG-CONTINUOUS
DATE: 02/25/19 TIME: 10:10:09 MAINS: 200A-3P MB R : DEMANDABLE RECEPTACLES
JOB: GRANADA HILLS POOL AIC RATING: 10,000 K : KITCHEN NO. OF EQUIPMENT: 0

CKT NO	CODE	TRIP	POLE	LOAD DESIGNATION (NOTE)	M	R	L	ϕA	ϕB	ϕC	CONNECTED VA A B C	ϕA	ϕB	ϕC	L	R	M	LOAD DESIGNATION (NOTE)	TRIP	POLE	CODE	CKT NO
1		70		TR-R 'TA'	(1)	1		15000				26093					1	SUB-PANEL 'HB'	150			2
3				-	✓	-			15000				26093				-	-				4
5			3	-	✓	-				15000				26093			-	-		3		6
7		20	1	SPACE				X				X						SPACE				8
9		20	1	SPACE					X				X					SPACE				10
11		20	1	SPACE						X				X				SPACE				12
13		30		MUSCO POLE 'P1'(3 LTS)	(1)	1		480				480					1	(1) MUSCO POLE 'P3'(3 LTS)	30			14
15				-	✓	-			480				480				-	✓ -				16
17			3	-	✓	-				480				480			-	✓ -		3		18
19		30		MUSCO POLE 'P2'(3 LTS)	(1)	1		480				480					1	(1) MUSCO POLE 'P4'(3 LTS)	30			20
21				-	✓	-			480				480				-	✓ -				22
23			3	-	✓	-				480				480			-	✓ -		3		24
25		20	1	SECURITY LIGHT	(2)		6	780				X						SPACE				26
27		20	1	EVENT/AVTIVITY LIGHT	(3)		4		520				X					SPACE				28
29		20	1	SPLASH PAD LIGHTS	(2)		3			390				X				SPACE				30
31				SPACE				X				X						SPACE				32
33				SPACE					X				X					SPACE				34
35				SPACE						X				X				SPACE				36
37				SPACE				X				X						SPACE				38
39				SPACE					X				X					SPACE				40
41				SPACE						X				X				SPACE				42

PANEL NOTES: PHASE TOTALS ϕA: 43793 ϕB: 43533 ϕC: 43403 TOTAL CONNECTED VA 130729

(1) ROUTE MUSCO LIGHTING CIRCUITS VIA MUSCO CONTROL AND MONITORING CABINET.

(2) CONTROLLED BY ASTRONOMICAL DIAL T.C. AND PHOTOCELL.

(3) CONTROLLED BY MANUAL SWITCH IN OFFICE.

CONNECTED VA (CODE N)	52450
CONNECTED VA (CODE L)	78279
CONNECTED VA (CODE R)	0
CONNECTED VA (CODE K)	0
PANEL CONNECTED KVA	130.7
PANEL DEMAND KVA	150.3
PANEL DEMAND AMPS	180.8
HIGHϕ AMPS W/LCL	

PANEL: 'HB'

(NEW) PANEL VOLTAGE: 480/277 3 ϕ 4 W CIRCUIT CODE: blank or N : NON-CONTINUOUS
BUS: 200A L : LONG-CONTINUOUS
DATE: 02/25/19 TIME: 09:39:45 MAINS: 150A-3P MCB R : DEMANDABLE RECEPTACLES
JOB: GRANADA HILLS POOL AIC RATING: 14,000 K : KITCHEN NO. OF EQUIPMENT: 0

CKT NO	CODE	TRIP	POLE	LOAD DESIGNATION (NOTE)	M	R	L	ϕA	ϕB	ϕC	CONNECTED VA A B C	ϕA	ϕB	ϕC	L	R	M	LOAD DESIGNATION (NOTE)	TRIP	POLE	CODE	CKT NO
1		70		TR-R 'TB'		1		15000				11093					1	CIRC.PUMP 'CP-1'(30HP)	80			2
3				-		-			15000				11093				-	-				4
5			3	-		-				15000				11093			-	-		3		6
7				SPACE				X				X						SPACE				8
9				SPACE					X				X					SPACE				10
11				SPACE						X				X				SPACE				12
13				SPACE				X				X						SPACE				14
15				SPACE					X				X					SPACE				16
17				SPACE						X				X				SPACE				18

PANEL NOTES: PHASE TOTALS ϕA: 26093 ϕB: 26093 ϕC: 26093 TOTAL CONNECTED VA 78279

CONNECTED VA (CODE N)	78279
CONNECTED VA (CODE L)	0
CONNECTED VA (CODE R)	0
CONNECTED VA (CODE K)	0
PANEL CONNECTED KVA	78.3
PANEL DEMAND KVA	78.3
PANEL DEMAND AMPS	94.2
HIGHϕ AMPS W/LCL	

LIGHTING FIXTURE SCHEDULE

TYPE	MOUNTING RECESSED	MOUNTING SURFACE	MOUNTING PENDANT	LAMPS NUMBER	LAMPS WATTAGE	LAMPS TYPE	LOAD	MANUFACTURER	CATALOG NO.	REMARKS
A	X	.	.	1	35	LED	35	LITHONIA	2TL2-40L-FW-A12-EZ1-LP830	2'x2'
AE	X	.	.	1	35	LED	35	LITHONIA	2TL2-40L-FW-A12-EZ1-LP830-EL14L	(1) 2'x2' EMERGENCY
B	.	.	X	1	25	LED	25	LITHONIA	ZL1N-L48-SMR-3000LM-FST-120-35K-WH	4' LENSED STRIP
C1	.	X	.	1	31	LED	31	LITHONIA	FEM-L48-4000LM-LPPFL-MD-120-35K-GZ10-80CRI	VAPOR 4' SURFACE MTD
C	.	.	X	1	31	LED	31	LITHONIA	FEM-L48-4000LM-LPPFL-MD-120-35K-GZ10-80CRI-DPMB	VAPOR 4' PENDANT MTD
CE	.	.	X	1	31	LED	31	LITHONIA	FEM-L48-4000LM-LPPFL-MD-120-35K-GZ10-80CRI-BSL722-DPMB	(1) VAPOR 4' EM. (5)
D	.	.	X	1	38	LED	38	LITHONIA	CLX-L96-6000LM-SEF-FDL-120-GZ10-35K-80CRI-WH	8' STRIP
DE	.	.	X	1	38	LED	38	LITHONIA	CLX-L96-6000LM-SEF-FDL-120-GZ10-35K-80CRI-E10WLCP-WH	(1) 8' STRIP EMERGENCY
E	X	.	.	1	23	LED	23	LITHONIA	LDN6-30/20-L06-AR-LSS-120-EZ1	6" DOWNLIGHT
EE	X	.	.	1	23	LED	23	LITHONIA	LDN6-30/20-L06-AR-LSS-120-EZ1-EL6	(1) 6" DNLT - EMERG.
F	X	.	.	1	13	LED	13	LITHONIA	LDN6-30/10-L06-AR-LSS-120-EZ1-WL	SHOWER 6" DOWNLIGHT
G	.	X	.	1	25	LED	25	LITHONIA	TBD	FACADE WALL SCONCE
H	.	X	.	1	78	LED	78	LITHONIA	DSXF2LED-P2-40K-FL-MVOLT-IS-PE-DNAXD	POLE MTD FLOOD
.	.	.	.	P	O	L	E	LITHONIA	RTS-20-8-0-F-TP-UL-DNAXD/BS28-T20-TD20-DNA	20' POLE
K	.	X	.	68'	2.2/LF	LED	2.2/LF	JUNO LIGHTING	SLW212-20FT-35K-80CRI-SM6	(4) WET LOCATION
.	.	REMOTE	.	.	DRIVER	.	.	JUNO LIGHTING	DLDPS-96W-FPCZT	(4) REMOTE DRIVER
L	.	X	.	1	14	LED	14	TBD	TBD	VANITY LIGHTS
EX	.	X	.	1	1	LED	1	LITHONIA	LQM-S-W-G-120-ELN	(1) EM. EXIT SIGN

NOTES:

(1) MINIMUM 90 MINUTES RUNNING TIME.

(2) PROVIDE 2 FIXTURES PER POLE(BULLHORN)

(3) MOUNT ON THE POLE @ +20'. PROVIDE ALL REQUIRED HARDWARE.

(4) PROVIDE ALL REQUIRED COMPONENTS FOR A COMPLETE AND OPERABLE SYSTEM

(5) COORDINATE MOUNTING TYPE, PENDANT OR SURFACE

PANEL: 'SP'

(2) (NEW) PANEL VOLTAGE: 208/120 3 ϕ 4 W CIRCUIT CODE: blank or N : NON-CONTINUOUS
BUS: 225A L : LONG-CONTINUOUS
DATE: 11/15/18 TIME: 14:10:13 MAINS: 150A-3P MB R : DEMANDABLE RECEPTACLES
JOB: GRANADA HILLS POOL AIC RATING: 10,000 K : KITCHEN NO. OF EQUIPMENT: 0

CKT NO	CODE	TRIP	POLE	LOAD DESIGNATION (NOTE)	M	R	L	ϕA	ϕB	ϕC	CONNECTED VA A B C	ϕA	ϕB	ϕC	L	R	M	LOAD DESIGNATION (NOTE)	TRIP	POLE	CODE	CKT NO
1		20	1	SP UNDERWATER LIGHTS	(1)		1	609				1200					(1)	SP FILTER AFC	20	1	L	2
3		20	1	SP UNDERWATER LIGHTS	✓		1		696				1200				✓	SP WATERCHEM CONTROL	20	1	L	4
5		20	1	SP UNDERWATER LIGHTS	✓		1			609				1200			✓	SP PRESS AMP SYS.	20	1	L	6
7		20	1	SP UNDERWATER LIGHTS	✓		1	696				360					✓	SP CIRC PUMP INTERCON	20	1		8
9		20	1	SPARE	✓				X				360				✓	CP CIRC PUMP HTR CONT	20	1		10
11		20	1	SPARE	✓					X				360			✓	SP WATER CHEM RELAY	20	1		12
13		20	1	SPARE	✓	1		X				1440					✓	SP HEATER	20			14
15		20	1	SP TIMING SCOREBOARD	✓	1			720				1440				✓	SP HEATER		2		16
17		20	1	SP TIMING SCOREBOARD	✓	1				720				1200			✓	WP WATER CHEM CONTR.	20	1		18
19		20	1	SP TIMING SCOREBOARD	✓	1		720				1200					✓	WP WET PLAY CONTROL	20	1		20
21		20	1	SP TIMING SCOREBOARD	✓	1			720				720				✓	WP HEATER	20	1		22
23		20	1	SPARE	✓					X				1300			✓	WP ULTRAVIOLET	20	1		24
25		30		WP CIRC. PUMP 3HP		1		1272				960						WP CHLORINE FEED	20	1		26
27				-		-			1272				720					WP ACID FEED	20	1		28
29		/	3	-		-				1272				1056				SP CLORINE PUMP 1HP	20			30
31		20		WP BOOSTER PUMP 2HP		1		900				1056						-		2		32
33				-		-			900				X					SPARE	20	1		34
35		/	3	-		-				900				X				SPARE	20	1		36
37				SPACE				X				1723				1		PANEL 'LB'	50			38
39				SPACE					X				1784				-	-				40
41				SPACE						X				1250			-	-		3		42

PANEL NOTES: PHASE TOTALS ϕA: 12136 ϕB: 10532 ϕC: 9867 TOTAL CONNECTED VA 32535

(1) PROVIDE GFCI CIRCUIT BREAKER

(2) REFER TO AQUATIC PLANS FOR POOL EQUIPMENT CIRCUITING.

CONNECTED VA (CODE N)	28935
CONNECTED VA (CODE L)	3600
CONNECTED VA (CODE R)	0
CONNECTED VA (CODE K)	0
PANEL CONNECTED KVA	32.5
PANEL DEMAND KVA	33.4
PANEL DEMAND AMPS	92.8
HIGHϕ AMPS W/LCL	

PANEL: 'LA'

(4) (NEW) PANEL VOLTAGE: 208/120 3 ϕ 4 W CIRCUIT CODE: blank or N : NON-CONTINUOUS
BUS: 225A L : LONG-CONTINUOUS
DATE: 04/15/20 TIME: 10:58:16 MAINS: 150A-3P MCB R : DEMANDABLE RECEPTACLES
JOB: GRANADA HILLS POOL AIC RATING: 10,000 K : KITCHEN NO. OF EQUIPMENT: 0

CKT NO	CODE	TRIP	POLE	LOAD DESIGNATION (NOTE)	M	R	L	ϕA	ϕB	ϕC	CONNECTED VA A B C	ϕA	ϕB	ϕC	L	R	M	LOAD DESIGNATION (NOTE)	TRIP	POLE	CODE	CKT NO
1	L	20	1	WOMENS 102,11,15,19,21	(1)		22	631				680			17		(2)	BATHHOUSE E&W FACADE	20	1	L	2
3	L	20	1	MENS 102,10,14,18,18,20	✓		22		631				X					SPARE	20	1		4
5	L	20	1	LOBBY 100, HALL 101	✓		5			190				X				SPARE	20	1		6
7	L	20	1	OFF.,RR,BAG CHECK			33	918				X						SPARE	20	1		8
9	L	20	1	JAN 112,13,EL.123,CHASE,17			8		206				X					SPARE	20	1		10
11		20	1	SPARE						X				X				SPARE	20	1		12
13		20		208V REC.		1		250				250				1		208V REC.	20			14
15		/	2	-		-			250				250			-		-		/	2	16
17		20	1	POOL DECK REC.		1				180				180		1		POOL DECK REC.	20	1		18
19		20	1	CHECK-IN, RM 105	(1)	3		540				180				1		RM 107, PA AMP	20	1		20
21		20	1	MV, RM 105	✓	1			900				1800			1		EHD, MENS 120	20	1		22
23		20	1	REF, RM 105	✓	1				500				900	5		1	RM 108,09,12,20,24	20	1		24
25		20	1	RM 107,06,125	(1)	5		900				180				1	(5)	SEC. C.P. 'SCP'	20	1		26
27		20	1	RM 107,06,04, 125	✓	4			720				180			1	✓	F.A. C.P. 'FACP'	20	1		28
29		20	1	EHD, RM 104	✓	1				1800				180		1	✓	TEL. T.C. 'TTC'	20	1		30
31		20	1	EHD, RM 108	(1)	1		1800				540			3			RM 113,115,123	20	1		32
33		20	1	EHD, RM 109	✓	1			1800				180					MUSCO CONTROL	20	1		34
35		20	1	EHD, RM 121		1				1800				360		2		CP-1, CP-2	20	1		36
37		60		PANEL 'ML'		1		4702				1800				1		EHD, MENS 120	20	1		38
39				-		-			3687				X					SPARE	20	1		40
41		/	3	-		-				1785				X				SPARE	20	1		42

PANEL NOTES: PHASE TOTALS ϕA: 13371 ϕB: 10604 ϕC: 7875 TOTAL CONNECTED VA 31850

(1) PROVIDE FACTORY ACCESSORY TIE ROD FOR CIRCUIT BREAKERS HANDLES FOR MULTIWIRE BRANCH CIRCUITS.

(2) CIRCUIT TO BE CONTROLLED BY PROGRAMMABLE TITLE 20 APPROVED ASTRONOMICAL DIAL TIME CLOCK AND PHOTOCELL.

(3) CIRCUIT TO BE CONTROLLED BY SWITCH IN THE OFFICE

(4) PROVIDE SPLIT-BUS PANEL.

(5) PROVIDE LOCK-ON DEVICE

CONNECTED VA (CODE N)	28594
CONNECTED VA (CODE L)	3256
CONNECTED VA (CODE R)	0
CONNECTED VA (CODE K)	0
PANEL CONNECTED KVA	31.9
PANEL DEMAND KVA	32.7
PANEL DEMAND AMPS	90.7
HIGHϕ AMPS W/LCL	

PANEL: 'LB'

(1) (NEW) PANEL VOLTAGE: 208/120 3 ϕ 4 W CIRCUIT CODE: blank or N : NON-CONTINUOUS
BUS: 100A L : LONG-CONTINUOUS
DATE: 04/15/20 TIME: 10:53:54 MAINS: MLO R : DEMANDABLE RECEPTACLES
JOB: GRANADA HILLS POOL AIC RATING: 10,000 K : KITCHEN NO. OF EQUIPMENT: 0

CKT NO	CODE	TRIP	POLE	LOAD DESIGNATION (NOTE)	M	R	L	ϕA	ϕB	ϕC	CONNECTED VA A B C	ϕA	ϕB	ϕC	L	R	M	LOAD DESIGNATION (NOTE)	TRIP	POLE	CODE	CKT NO
1	L	20	1	EQ. ROOM,STOR,CHLOR,ACI			13	403				X						SPARE	20	1	L	2
3	L	20	1	EXTERIOR BLDG LTS			5		284				X					SPARE	20	1	L	4
5		20	1	SPARE						X				X				SPARE	20	1	L	6
7		20	1	SPARE				X				X						SPARE	20	1		8
9		20	1	SPARE					X				X					SPARE	20	1		10
11		20	1	SPARE						X				X				SPARE	20	1		12
(1) 13		20	1	POOL DECK REC.	(2)	1		180				250				1		30A, 208V REC.	30			14 (1)
15		20	1	POOL DECK REC.	✓	1			180				250			-		-		/	2	16
17		20	1	POOL DECK REC.	(2)	1				180				250		1		FATC	20	1		18
19		20	1	POOL DECK REC.	✓	1		180				360				2		SEC.T.C.	20	1		20
21		20	1	POOL EQ. RM	(2)	4			720				X					SPACE	20	1		22
23		20	1	POOL EQ. RM	✓	4				720				X				SPACE	20	1		24
25		20	1	CP-3, RM 153	✓	1		180				X						SPACE	20	1		26
27		20	1	SPACE					X				X					SPACE	20	1		28
(1) 29		20	1	SPACE						X				X				SPACE	20	1		30 (1)
31		15	1	EF-9		1		350				X						SPARE	20	1		32
33		15	1	EF-10		1			350				X					SPARE	20	1		34
35		15	1	EF-11		1				350				X				SPARE	20	1		36
37		20	1	ROOF REC.			2	360				X						SPACE				38
39		20	1	SPARE					X				X					SPACE				40
41		20	1	SPARE						X				X				SPACE				42

PANEL NOTES: PHASE TOTALS ϕA: 2263 ϕB: 1784 ϕC: 1500 TOTAL CONNECTED VA 5547

(1) PROVIDE TRIPLE SPLIT-BUS PANEL.

(2) PROVIDE FACTORY ACCESSORY TIE ROD FOR CIRCUIT BREAKERS HANDLES FOR MULTIWIRE BRANCH CIRCUITS.

CONNECTED VA (CODE N)	4860
CONNECTED VA (CODE L)	687
CONNECTED VA (CODE R)	0
CONNECTED VA (CODE K)	0
PANEL CONNECTED KVA	5.5
PANEL DEMAND KVA	5.7
PANEL DEMAND AMPS	15.9
HIGHϕ AMPS W/LCL	

PANEL: 'ML'

(1) (NEW) PANEL VOLTAGE: 208/120 3 ϕ 4 W CIRCUIT CODE: blank or N : NON-CONTINUOUS
BUS: 100A L : LONG-CONTINUOUS
DATE: 04/07/20 TIME: 13:36:38 MAINS: MLO R : DEMANDABLE RECEPTACLES
JOB: GRANADA HILLS POOL AIC RATING: 10,000 K : KITCHEN NO. OF EQUIPMENT: 0

CKT NO	CODE	TRIP	POLE	LOAD DESIGNATION (NOTE)	M	R	L	ϕA	ϕB	ϕC	CONNECTED VA A B C	ϕA	ϕB	ϕC	L	R	M	LOAD DESIGNATION (NOTE)	TRIP	POLE	CODE	CKT NO
1	L	25	/	SHP-3-1		1		1456				54					3	EF-1, EF-2, EF-3	15	1		2
3	L	/	2	-		-			1456				360				1	EF-4	15	1		4
5		15	/	CU-1A		1				832				360			1	EF-5	15	1		6
7		/	2	-		-		832				720				4		ROOF REC.	20	1		8
9		15	/	EF-6		1			58				360				2	MENS HEATER CONTR.	15	1		10
11		/	2	-		-				58				360			2	WOMENS HEATER CONTR.	15	1		12
13		15	/	EF-7		1		58				57					2	FC-0.75-1, FC-1-3	15			14
15		/	2	-		-			58				57				-	-		/	2	16
17		15	/	EF-8		1				34				57			2	FC-1-1, FC-1-2	15	/		18
19		/	2	-		-		34				57					-	-		/	2	20
21		15	/	EF-12		1			58				26				1	FC-1.5-1	15	/		22
23		/	2	-		-				58				26			-	-		/	2	24
25		15	/	EF-13		1		58				1196						SHP-2/1	20	/		26
27		/	2	-		-			58				1196					-		/	2	28
(1) 29		20	1	SPARE						X				X				SPARE	20	1		30 (1)
31		20	1	DOOR STRIKE		1		180				X						SPARE	20	1		32
33		20	1	SPARE					X				X					SPARE	20	1		34
35		20	1	SPARE						X				X				SPARE	20	1		36
37		20	1	SPARE				X				X						SPARE	20	1		38
39		20	1	SPARE					X				X					SPARE	20	1		40
41		20	1	SPARE						X				X				SPARE	20	1		42

PANEL NOTES: PHASE TOTALS ϕA: 4702 ϕB: 3687 ϕC: 1785 TOTAL CONNECTED VA 10174

(1) PROVIDE SPLIT-BUS PANEL.

CONNECTED VA (CODE N)	7262
CONNECTED VA (CODE L)	2912
CONNECTED VA (CODE R)	0
CONNECTED VA (CODE K)	0
PANEL CONNECTED KVA	10.2
PANEL DEMAND KVA	10.9
PANEL DEMAND AMPS	30.3
HIGHϕ AMPS W/LCL	

BUREAU OF ENGINEERING — OFFICIAL RECORD

ENGINEERING — CITY OF LOS ANGELES

BUREAU OF ENGINEERING

NO.	REVISION DESCRIPTION	DATE	BY

BUILDING NO. -

INDEX NO. RP-300118

DEPARTMENT OF PUBLIC WORKS
CITY OF LOS ANGELES

GARY LEE MOORE, PE, ENV S

CITY ENGINEER

DATE:

VERTICAL CONTROL:	Issue	Date
HORIZONTAL CONTROL:	Issue	Date
	Issue	Date
	Issue	Date
	Issue	Date
	Issue	Date

ARCHITECTURAL DIVISION

ARCHITECT/ENGINEER: Silver Roth & Assoc. LIC. NO.: 012941

DESIGNED BY:	Felix Roth
DRAWN BY:	Felix Roth
CHECKED BY:	Felix Roth
APPROVED BY:	Approver

SHEET TITLE: PANEL SCHEDULES AND LIGHTING FIXTURE SCHEDULE

PROJECT: GRANADA HILLS POOL AND BATHOUSE REPLACEMENT PROJECT

ADDRESS: 16730 CHATSWORTH STREET GRANADA HILLS, CA 91344

BID SET
PROJECT DATE ISSUE: 06/22/21

WORK ORDER NO. #E170517

PLAN FILE NO.

DRAWING NO. E0.2

SHEET O F SHEETS

REGISTERED PROFESSIONAL ENGINEER — FELIX ROTH — No. 012941 — Exp. 3-31-21 — ELECTRICAL — STATE OF CALIFORNIA

SILVER,ROTH & ASSOCIATES INC.
CONSULTING ELECTRICAL ENGINEERS
5 1 1 SOUTH FAIRFAX AVENUE
LOS ANGELES, CALIFORNIA, 90036-3100
TEL: (323) 933-3700 / FAX: (323) 933-3874
EMAIL: sra@silverroth.com

PLOTTED:4/15/2020 11:00:59 AM

THE CITY OF LOS ANGELES OR ITS OFFICERS OR AGENTS SHALL NOT BE RESPONSIBLE FOR THE ACCURACY OR COMPLETENESS OF ELECTRONIC COPIES OF THIS PLAN SHEET.

TTLB TEMPLATE REVISION DATE: 02/2013
SHEET ISSUE DATE: 11/13/18
FILE PATH: C:\Users\dcard\Documents\E_Granada-Hills_2017_SilverRoth.rvt

REVISION DATES (DESIGN STAGE ONLY)

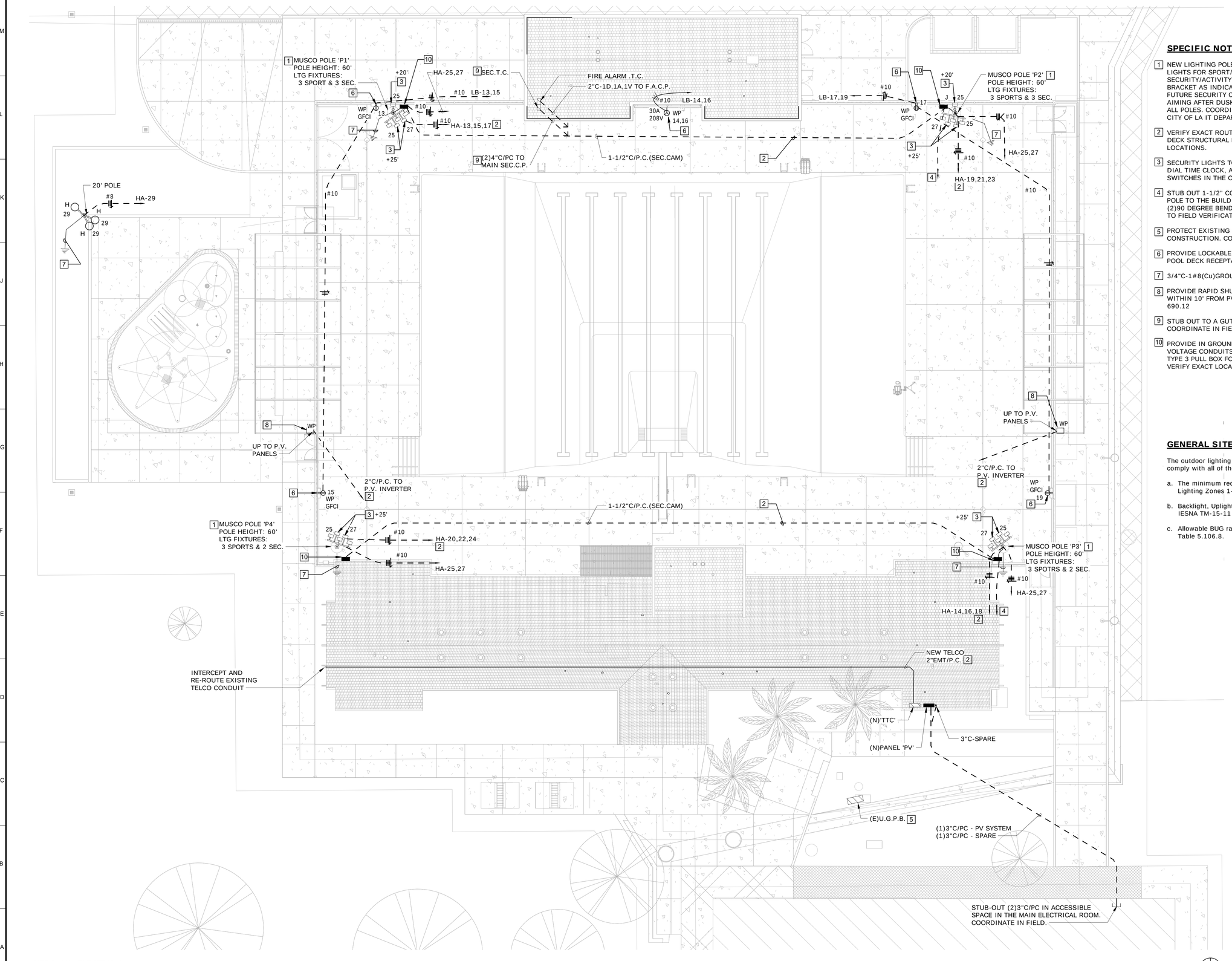

1 SITE PLAN - ELECTRICAL
3/32" = 1'-0"

SPECIFIC NOTES:

1. NEW LIGHTING POLE BY MUSCO LIGHTING WITH 3 FLOOD LIGHTS FOR SPORT/COMPETITION EVENTS AND SECURITY/ACTIVITY LIGHTS AS INDICATED ON A SEPARATE BRACKET AS INDICATED. PROVIDE SEPARATE BRACKET FOR FUTURE SECURITY CAMERAS. COORDINATE IN FIELD. ADJUST AIMING AFTER DUSK TO OWNERS SATISFACTION. TYPICAL FOR ALL POLES. COORDINATE CAMERAS MOUNTING HEIGHT WITH CITY OF LA IT DEPARTMENT, PRIOR TO ORDERING.
2. VERIFY EXACT ROUTING IN FIELD. COORDINATE WITH POOL DECK STRUCTURAL ELEMENTS. REFER TO E3.1 FOR INVERTER LOCATIONS.
3. SECURITY LIGHTS TO BE CONTROLLED BY ASTRONOMICAL DIAL TIME CLOCK, ACTIVITY LIGHTS TO BE CONTROLLED BY SWITCHES IN THE OFFICE.
4. STUB OUT 1-1/2" CONDUIT WITH PULLCORD FROM LIGHTING POLE TO THE BUILDING FOR FUTURE SECURITY CAMERAS. MAX (2)90 DEGREE BENDS. COORDINATE WITH OWNER. SUBJECT TO FIELD VERIFICATION
5. PROTECT EXISTING ELECTRICAL U.G.P.B. DURING CONSTRUCTION. COORDINATE IN FIELD.
6. PROVIDE LOCKABLE WEATHERPROOF ENCLOSURE FOR ALL POOL DECK RECEPTACLES.
7. 3/4"C-1#8(Cu)GROUND TO BUILDING GROUND SYSTEM
8. PROVIDE RAPID SHUT DOWN DEVICE OF THE PV SYSTEM WITHIN 10' FROM PV ARRAY. COMPLY WITH 2016 CEC, ART 690.12
9. STUB OUT TO A GUTTER BELOW SECURITY PANEL COORDINATE IN FIELD. PULL IN CABLES AS REQURIED.
10. PROVIDE IN GROUND PULL BOX AT EACH POLE FOR THE LOW VOLTAGE CONDUITS, PULL BOX SHALL BE LA CITY APPROVED TYPE 3 PULL BOX FOR TERMINATION OF CCTV HOMERUNS. VERIFY EXACT LOCATION IN FIELD.

GENERAL SITE LIGHTING NOTE:

The outdoor lighting systems shall be designed and installed to comply with all of the following:

a. The minimum requirements in California Energy Code for Lighting Zones 1-4

b. Backlight, Uplight and Glare (BUG) ratings as defined in IESNA TM-15-11

c. Allowable BUG ratings not exceeding those shown in on Table 5.106.8.

BUREAU OF ENGINEERING
OFFICIAL RECORD

SILVER,ROTH & ASSOCIATES INC.
CONSULTING ELECTRICAL ENGINEERS
511 SOUTH FAIRFAX AVENUE
LOS ANGELES, CALIFORNIA, 90036-3130
TEL: (323) 933-3700 / FAX: (323) 933-3874
EMAIL: sra@silverroth.com

REGISTERED PROFESSIONAL ENGINEER FELIX ROTH No. 012941 Exp. 3-31-21 ELECTRICAL STATE OF CALIFORNIA

BID SET
PROJECT DATE ISSUE : 06/22/21

CITY OF LOS ANGELES
VERTICAL CONTROL:
HORIZONTAL CONTROL:
SHEET TITLE: ELECTRICAL SITE PLAN
PROJECT: GRANDADA HILLS POOL AND BATHOUSE REPLACEMENT PROJECT
ADDRESS: 16730 CHATSWORTH STREET GRANADA HILLS, CA 91344

WORK ORDER NO. #E170517
PLAN FILE NO.
DRAWING NO. E1.0
SHEET 0 OF SHEETS

DEPARTMENT OF PUBLIC WORKS
BUREAU OF ENGINEERING
CITY OF LOS ANGELES
ENGINEERING

GARY LEE MOORE, PE, ENV SP
CITY ENGINEER

ARCHITECT/ENGINEER: Silver Roth & Assoc. LIC. NO.: 012941
ARCHITECTURAL DIVISION
DESIGNED BY: Felix Roth
DRAWN BY: Felix Roth
CHECKED BY: Felix Roth
APPROVED BY: Approver

NO.	REVISION DESCRIPTION	DATE	BY

BUILDING NO. -
INDEX NO. RP-300118

REVISION DATES (DESIGN STAGE ONLY)

Issue Date
Issue Date
Issue Date
Issue Date
Issue Date
Issue Date

THE CITY OF LOS ANGELES OR ITS OFFICERS OR AGENTS SHALL NOT BE RESPONSIBLE FOR THE ACCURACY OR COMPLETENESS OF ELECTRONIC COPIES OF THIS PLAN SHEET.

TTLB TEMPLATE REVISION DATE: 02/2013
SHEET ISSUE DATE: 11/11/18
FILE PATH: C:\Users\dcard\Documents\E_Granada-Hills_2017_SilverRoth.rvt

PLOTTED:4/15/2020 11:01:09 AM

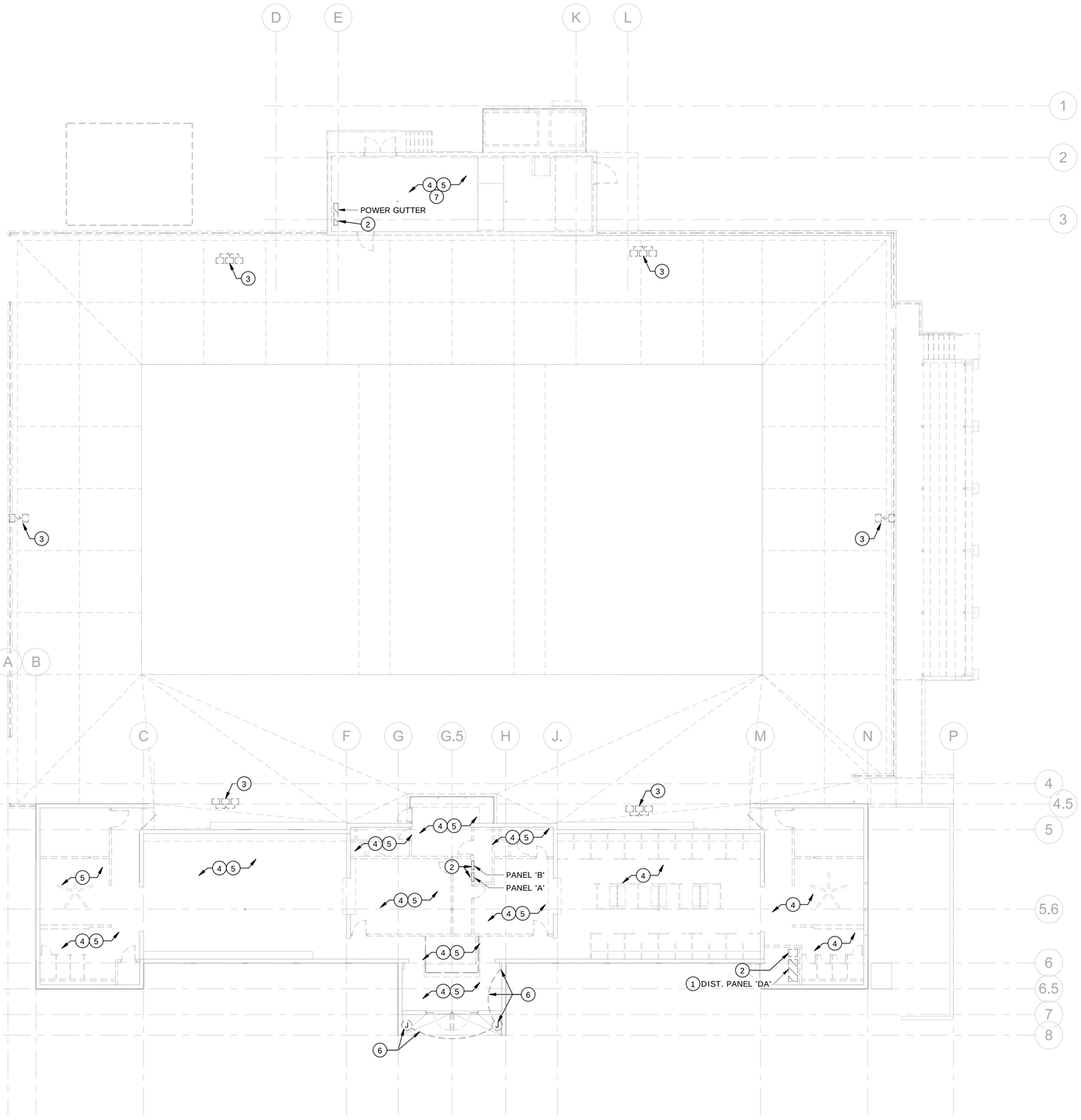

1 DEMOLITION - ELECTRICAL
3/32" = 1'-0"

NORTH

DEMOLITION NOTES:

1. DISCONNECT POWER TO THE POOL SITE MAIN SWITCHBOARD. REMOVE THE SWITCHBOARD, DELIVER TO THE OWNER WHERE DIRECTED, OR PROPERLY DISPOSE OF PER OWNER'S REQUEST.
2. REMOVE ALL ELECTRICAL SWITCHGEAR IN THE PROJECT. PROPERLY DISPOSE OF AS REQUIRED.
3. REMOVE ALL LIGHTING POLES, FIXTURES ON THE POOL DECK. DELIVER TO THE OWNER WHERE DIRECTED, OR PROPERLY DISPOSE OF PER OWNER'S REQUEST. PULL OUT WIRES, REMOVE CONDUITS WHERE POSSIBLE.
4. REMOVE ALL OUTLETS AND CONDUIT AND WIRES TO SAME IN THE WALL SCHEDULED FOR DEMOLITION.
5. REMOVE ALL LIGHTING, SWITCHES AND CONDUIT AND WIRES TO SAME, U.N.O.
6. RETAIN EXISTING WALL LIGHTING OUTLET, CONDUITS AND SWITCH OUTLET FOR FUTURE LIGHTING. PULL OUT WIRES TO SOURCE. COORDINATE IN FIELD.
7. DISCONNECT POWER TO THE POOL EQUIPMENT. REMOVE ALL EXPOSED CONDUIT, PULL OUT WIRES.

BUREAU OF ENGINEERING
OFFICIAL RECORD

THE CITY OF LOS ANGELES OR ITS OFFICERS OR AGENTS SHALL NOT BE RESPONSIBLE FOR THE ACCURACY OR COMPLETENESS OF ELECTRONIC COPIES OF THIS PLAN SHEET.

REVISION DATES (DESIGN STAGE ONLY)

TTLB TEMPLATE REVISION DATE: 02/2013
SHEET ISSUE DATE: 11/11/18
FILE PATH: C:\Users\dcard\Documents\E_Granada-Hills_2017_SilverRoth.rvt

BUREAU OF ENGINEERING
ENGINEERING
CITY OF LOS ANGELES

NO.	REVISION DESCRIPTION	DATE	BY

INDEX NO. RP-300118
BUILDING NO. -

DEPARTMENT OF PUBLIC WORKS
CITY OF LOS ANGELES

GARY LEE MOORE, PE, ENV SP — CITY ENGINEER
ARCHITECTURAL DIVISION

		Issue
ARCHITECT/ENGINEER:	Silver Roth & Assoc. LIC. NO. 012941	Date
DESIGNED BY:	Felix Roth	Issue
DRAWN BY:	Felix Roth	Date
CHECKED BY:	Felix Roth	Issue
APPROVED BY:	Approver	Date
		Issue
		Date

VERTICAL CONTROL:
HORIZONTAL CONTROL:

SHEET TITLE: ELECTRICAL DEMOLITION PLAN

PROJECT: GRANADA HILLS POOL AND BATHOUSE REPLACEMENT PROJECT

ADDRESS: 16730 CHATSWORTH STREET GRANADA HILLS, CA 91344

BID SET
PROJECT DATE ISSUE: 06/22/21

REGISTERED PROFESSIONAL ENGINEER FELIX ROTH No. 012941 Exp. 3-31-21 ELECTRICAL STATE OF CALIFORNIA

SILVER,ROTH & ASSOCIATES INC.
CONSULTING ELECTRICAL ENGINEERS
511 SOUTH FAIRFAX AVENUE
LOS ANGELES, CALIFORNIA, 90036-3100
TEL: (323) 933-3700 / FAX: (323) 933-3874
EMAIL: sra@silverroth.com

WORK ORDER NO. #E170517
PLAN FILE NO.
DRAWING NO. E1.1
SHEET OF SHEETS

PLOTTED:4/15/2020 11:01:10 AM

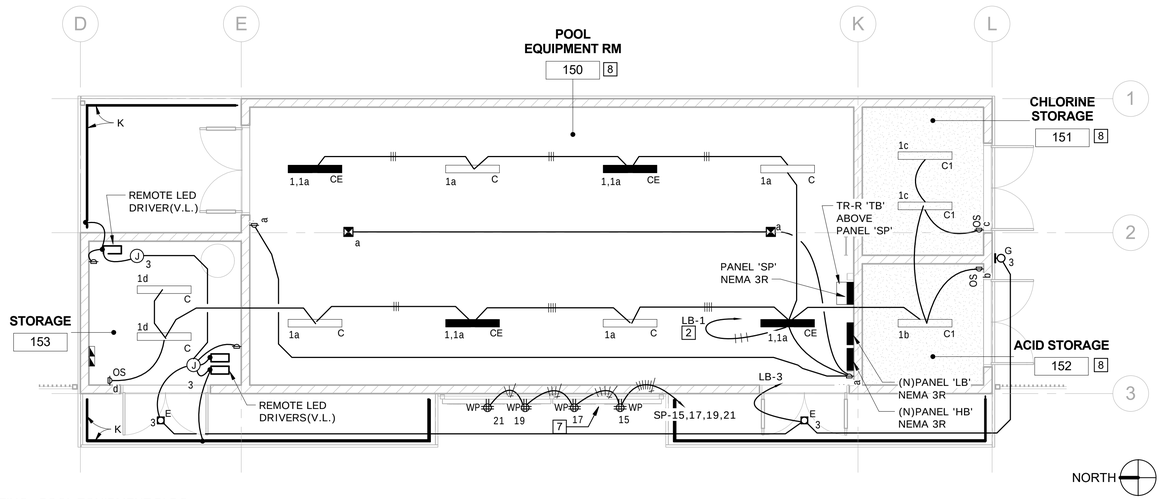

2 LIGHTING - POOL EQUIPMENT BLDG
3/16" = 1'-0"

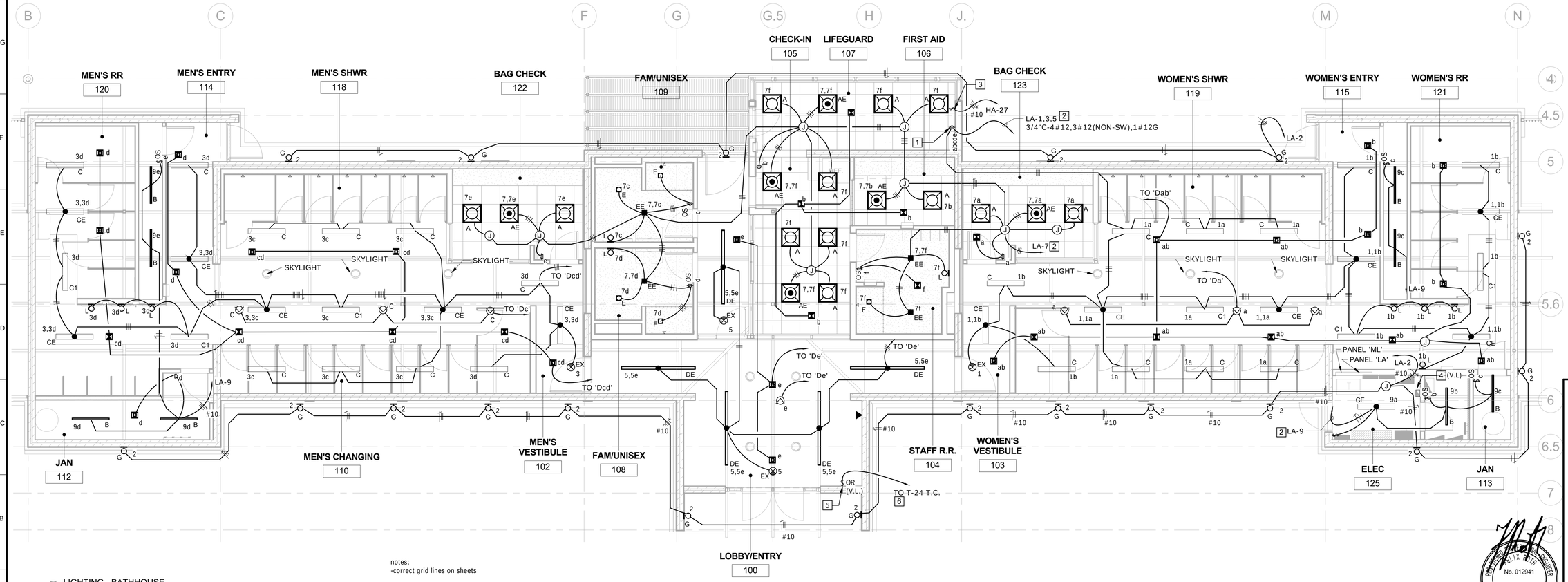

1 LIGHTING - BATHHOUSE
3/16" = 1'-0"

notes:
-correct grid lines on sheets

SPECIFIC NOTES:

1. BANK OF SWITCHES SHALL BE MOUNTED AT +48". VERIFY LOCATION IN FIELD. ENGRAVE ON COVER PLATE NAME OF THE LOAD OR ROOM CONTROLLED BY THE SWITCH, COORDINATE WITH OWNER.
2. PROVIDE HOT, NON-SWITCHED HOT WIRE. SEE GENERAL NOTE 5 ON THIS SHEET.
3. SWITCH TO CONTROL ACTIVITY LIGHTS. SEE PANEL SCHEDULE.
4. PROPOSED LOCATION FOR THE T-24 MANDATORY LIGHTING SHUT-OFF TIME CLOCK. COORDINATE IN FIELD.
5. BY-PASS OVERRIDE SWITCH FOR T-24 MANDATORY LIGHTING SHUT-OFF. VERIFY LOCATION IN FIELD.
6. TO CERTIFIED T-24 TIME CLOCK. VERIFY EXACT LOCATION IN FIELD.
7. COORDINATE WIRING OF THE SCORE BOARD IN FIELD, PRIOR TO ROUGHING-IN. VERIFY LOCATION IN FIELD
8. ALL CONDUITS IN THIS ROOM SHALL BE GRS.

GENERAL NOTES:

1. ALL EXPOSED CONDUITS IN MECHANICAL ROOMS WHERE SUBJECT TO CORROSIVE ENVIRONMENT SHALL BE GRS.
2. ALL CONDUITS IN CEILING SHALL BE RUN BETWEEN THE JOISTS, SUBJECT TO FIELD COORDINATION.
3. COORDINATE LOCATION OF ALL LIGHTING FIXTURES WITH THE CEILING STRUCTURE AND CONCRETE BEAMS LAYOUT. REFER TO ARCHITECTURAL RCP'S.
4. PROVIDE SELF CONTAINED EMERGENCY BATTERY PACK (90 MINUTES), IN ALL EMERGENCY FIXTURES AS INDICATED ON PLANS.
5. PROVIDE A TRUE NON SWITCHED HOT WIRE DIRECTLY FROM THE LIGHTING BRANCH CIRCUIT BREAKER TO EACH FIXTURE WITH SELF CONTAINED EMERGENCY BATTERY PACK. BY-PASS ALL TIME CLOCKS AND SWITCHES. CONNECT PER MANUFACTURERS INSTRUCTIONS.
6. ALL INTERIOR EXPOSED CONDUITS AND ALL EXTERIOR CONDUITS SHALL BE GRS CONDUITS.
7. ANY TIME A BUILDING OR A PORTION OF A BUILDING IS OCCUPIED, THE MEANS OF EGRESS SERVING THE OCCUPIED PORTION SHALL BE ILLUMINATED AT AN INTENSITY OF NOT LESS THAN 1-FOOT-CANDLE (11 LUX) AT THE WALKING SURFACE LEVEL.
8. COORDINATE LIGHTING OCCUPANCY SENSOR'S TIME DELAY WITH OWNER.
9. COORDINATE THE INSTALLATION OF ALL LIGHTING EQUIPMENT WITH THE PLANNING AND DEVELOPMENT AGENCY AND SCE Co. REBATE PROGRAM.
10. VERIFY TYPE OF CEILING IN ALL SPACES, AND PROVIDE MOUNTING HARDWARE ACCORDING TO THE CEILING TYPE. SUBJECT TO FIELD COORDIANTION.

BUREAU OF ENGINEERING
OFFICIAL RECORD

THE CITY OF LOS ANGELES OR ITS OFFICERS OR AGENTS SHALL NOT BE RESPONSIBLE FOR THE ACCURACY OR COMPLETENESS OF ELECTRONIC COPIES OF THIS PLAN SHEET.

TTLB TEMPLATE REVISION DATE: 02/2013
SHEET ISSUE DATE: 11/11/18
FILE PATH: C:\Users\dcard\Documents\E_Granada-Hills_2017_SilverRoth.rvt

REVISION DATES
(DESIGN STAGE ONLY)

ENGINEERING
CITY OF LOS ANGELES

DEPARTMENT OF PUBLIC WORKS
BUREAU OF ENGINEERING

NO.	REVISION DESCRIPTION	DATE	BY

BUILDING NO. -

INDEX NO. RP-300118

CITY ENGINEER
DATE:
Issue Date
Issue Date
Issue Date
Issue Date
Issue Date
Issue Date
Issue Date

GARY LEE MOORE, PE, ENV SP
CITY ENGINEER

ARCHITECT/ENGINEER: Silver Roth & Assoc. LIC. NO.: 012941
ARCHITECTURAL DIVISION

DESIGNED BY: Designer
DRAWN BY: Author
CHECKED BY: Checker
APPROVED BY: Approver

CITY OF LOS ANGELES

VERTICAL CONTROL:
HORIZONTAL CONTROL:

SHEET TITLE: LIGHTING PLANS - BATHHOUSE AND POOL EQ. BLDG

PROJECT: GRANDADA HILLS POOL AND BATHHOUSE REPLACEMENT PROJECT

ADDRESS: 16730 CHATSWORTH STREET
GRANADA HILLS, CA 91344

BID SET
PROJECT DATE ISSUE : 06/22/21

WORK ORDER NO.
#E170517

PLAN FILE NO.

DRAWING NO.
E2.1
SHEET 0 OF SHEETS

PLOTTED:4/15/2020 11:01:16 AM

FELIX ANTHONY ROTH
No. 012941
Exp. 3-31-21
ELECTRICAL
STATE OF CALIFORNIA

SILVER,ROTH & ASSOCIATES INC.
CONSULTING ELECTRICAL ENGINEERS
5 1 1 SOUTH FAIRFAX AVENUE
LOS ANGELES, CALIFORNIA, 90036-3100
TEL: (323) 933-3700 / FAX: (323) 933-3874
EMAIL: sra@silverroth.com

Schedule									
Symbol	Label	QTY	Catalog Number	Description	Lamp	Number Lamps	Lumens per Lamp	LLF	Wattage
	CE	3	FEM L48 3000LM LPPFL MD 80CRI 35K E10WMCP (EM Battery Pack Provides 1441 lms)	FEM LED 48", 3,000 lumens, polycarbonate, low profile frosted lens, medium distribution, 80 CRI, 3500 K		1	2602	0.49	18.05

Statistics						
Description	Symbol	Avg	Max	Min	Max/Min	Avg/Min
Pool Equipment RM 150	+	2.7 fc	4.2 fc	1.1 fc	3.8:1	2.5:1

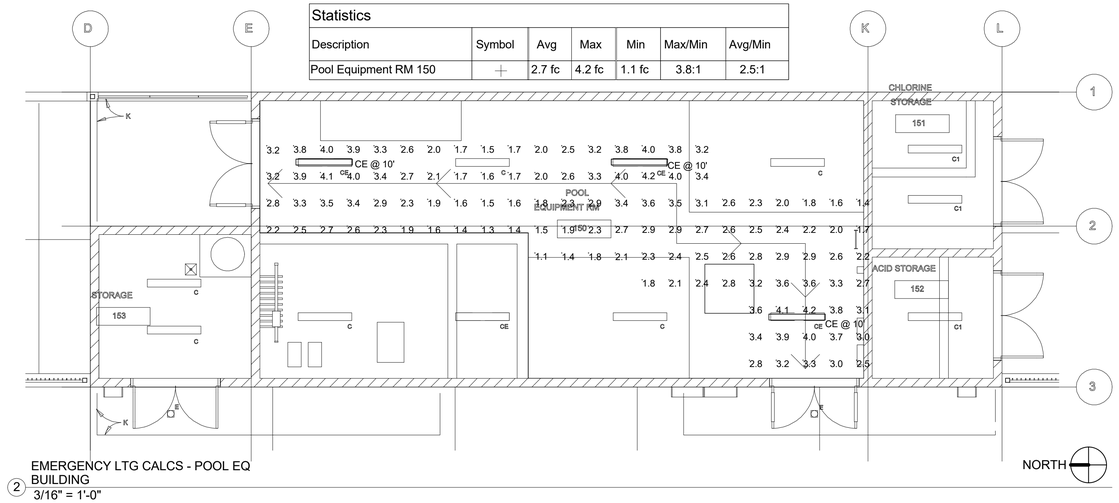

2 EMERGENCY LTG CALCS - POOL EQ BUILDING
3/16" = 1'-0"

Statistics						
Description	Symbol	Avg	Max	Min	Max/Min	Avg/Min
Bag Check 122	+	3.7 fc	5.4 fc	0.5 fc	10.8:1	7.4:1
Bag Check 123	+	3.8 fc	5.3 fc	2.2 fc	2.4:1	1.7:1
Check in 105	+	4.6 fc	7.9 fc	0.8 fc	9.9:1	5.8:1
Elec 125	+	4.8 fc	5.6 fc	4.3 fc	1.3:1	1.1:1
Fam Unisex 108	+	6.8 fc	8.3 fc	4.7 fc	1.8:1	1.4:1
Fam Unisex 109	+	6.9 fc	8.4 fc	5.0 fc	1.7:1	1.4:1
Hall 101	+	4.2 fc	6.0 fc	1.7 fc	3.5:1	2.5:1
Lobby Entry 100	+	6.4 fc	8.4 fc	4.2 fc	2.0:1	1.5:1
Men's RR, Entry & Shwr	+	3.5 fc	5.5 fc	0.5 fc	11.0:1	7.0:1
Staff RR 104	+	10.2 fc	13.9 fc	4.3 fc	3.2:1	2.4:1
Women 103 111 115 121	+	3.6 fc	5.6 fc	0.3 fc	18.7:1	12.0:1

Schedule									
Symbol	Label	QTY	Catalog Number	Description	Lamp	Number Lamps	Lumens per Lamp	LLF	Wattage
	AE	6	2TL2 40L A12 MVOLT EZ1 LP830 E10WLCP (EM Battery Pack Provides 1089 lms)	2TL2 2X2 4000 NOMINAL LUMENS, A12 LENS, 3000K	LED	1	3811	0.25	35
	CE	13	FEM L48 3000LM LPPFL MD 80CRI 35K E10WMCP (EM Battery Pack Provides 1441 lms)	FEM LED 48", 3,000 lumens, polycarbonate, low profile frosted lens, medium distribution, 80 CRI, 3500 K		1	2602	0.49	18.05
	DE	5	CLX L96 6000LM SEF FDL MVOLT 35K 80CRI CLXRW96 E10WLCP (EM Battery Pack Provides 1409 lms)	CLX LED Strip Light 96", 6000LM, Standard efficacy, Less louver, Flat diffuse, 3500K, 80CRI , Wide decorative 96" reflector	LED	1	5377	0.23	38.15
	EE	4	LDN6 30/20 L06AR LSS E10WCP (EM Battery Pack Provides 879 lms)	6IN LDN, 3000K, 2000LM, CLEAR, SEMI-SPECULAR REFLECTOR, CRI80		1	1980	0.39	22.52

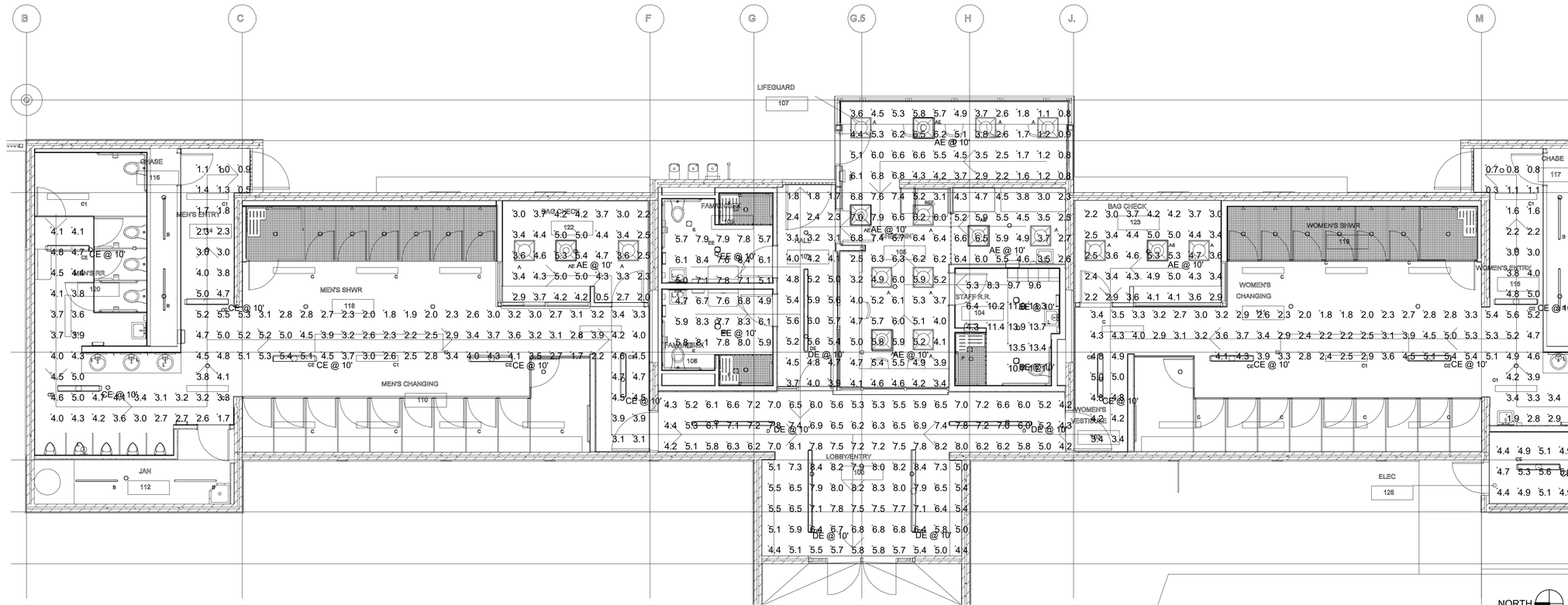

1 EMERGENCY LTG CALCS - BATHHOUSE
3/16" = 1'-0"

BUREAU OF ENGINEERING
OFFICIAL RECORD

SILVER,ROTH & ASSOCIATES INC.
CONSULTING ELECTRICAL ENGINEERS
5 1 1 SOUTH FAIRFAX AVENUE
LOS ANGELES, CALIFORNIA, 90036-3100
TEL: (323) 933-3700 / FAX: (323) 933-3874
EMAIL: sra@silverroth.com

No. 012941
Exp. 3-31-21
ELECTRICAL
STATE OF CALIFORNIA

ENGINEERING
CITY OF LOS ANGELES

BUREAU OF ENGINEERING
DEPARTMENT OF PUBLIC WORKS
CITY OF LOS ANGELES

GARY LEE MOORE, PE, ENV SP
CITY ENGINEER

ARCHITECTURAL DIVISION
ARCHITECT/ENGINEER: Silver Roth & Assoc. LIC. NO. 012941
DESIGNED BY: Felix Roth
DRAWN BY: Felix Roth
CHECKED BY: Felix Roth
APPROVED BY: Approver

NO.	REVISION DESCRIPTION	DATE	BY

BUILDING NO. -

INDEX NO. RP-300118

VERTICAL CONTROL:
HORIZONTAL CONTROL:
CITY ENGINEER DATE:
Issue Date
Issue Date
Issue Date
Issue Date
Issue Date
Issue Date

SHEET TITLE: EM LIGHTING POINT BY POINT CALCS. - BATHHOUSE AND POOL EQ. BLDG.

PROJECT: GRANADA HILLS POOL AND BATHHOUSE REPLACEMENT PROJECT

ADDRESS: 16730 CHATSWORTH STREET GRANADA HILLS, CA 91344

PROJECT DATE ISSUE : /21

WORK ORDER NO. #E170517

PLAN FILE NO.

DRAWING NO. E2.2

SHEET OF SHEETS

PLOTTED:4/15/2020 11:01:22 AM

THE CITY OF LOS ANGELES OR ITS OFFICERS OR AGENTS SHALL NOT BE RESPONSIBLE FOR THE ACCURACY OR COMPLETENESS OF ELECTRONIC COPIES OF THIS PLAN SHEET.

FILE PATH: C:\Users\dcard\Documents\E_Granada-Hills_2017_SilverRoth.rvt

TTLB TEMPLATE REVISION DATE: 02/2013
SHEET ISSUE DATE: 04/07/20

REVISION DATES (DESIGN STAGE ONLY)

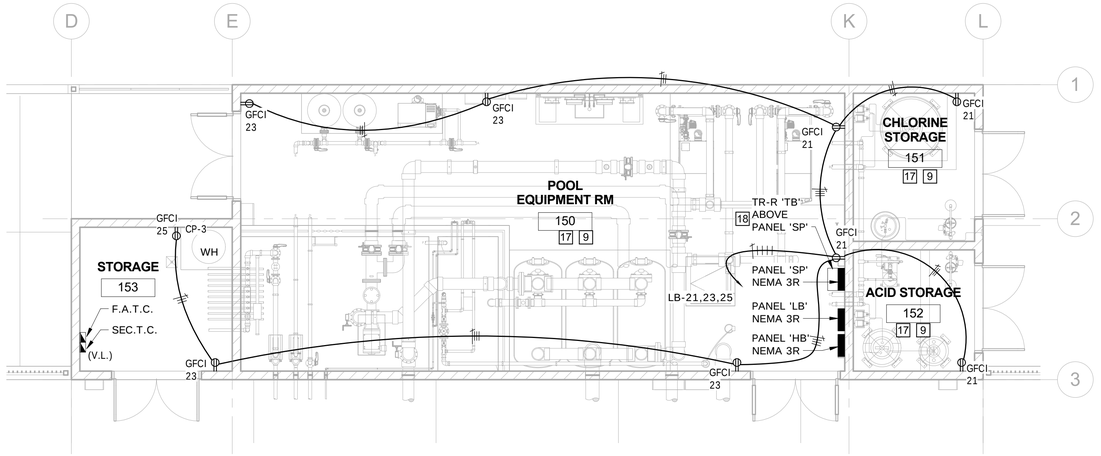

2 POWER AND SIGNAL - POOL EQUIPMENT BLDG
3/16" = 1'-0"

NORTH

SPECIFIC NOTES:

1. PROVIDE NEW TELEPHONE TERMINAL CABINET 'TTC' 24"x24"x6"D WITH PLYWOOD BACKING. TERMINATE NEW CABLES AS REQUIRED, COORDINATE WITH TELEPHONE COMPANY AND THE OWNER. REFER TO SITE PLAN.
2. NOT USED.
3. NOT USED.
4. NOT USED.
5. NEW AUDIO J-BOX (V.L.) FOR CONNECTION TO NEW AMPLIFIER. PROVIDE NEW AMPLIFIER ATLAS/SOUND #A120. INSTALL AND WIRE PER MANUFACTURERS INSTRUCTIONS. COORDINATE EXACT LOCATION WITH OWNER. CONNECT ALL SPEAKERS, MICROPHONES AND OTHER PERIPHERAL DEVICES.
6. PROVIDE NEW LOUDSPEAKERS, ATLAS APF15T WITH SOUNOLIER VP410S BAFFLE AND VPA-APF ADAPTER, OR EQUAL. PROVIDE VANDALPROOF STEEL ENCLOSURE. SEE DETAIL '5' ON SHEET E5.1
7. PROVIDE NEW 3/4"PVC, PULL IN NEW CABLE, WEST PENN AQC-294 TO THE P.A. J-BOX IN OFFICE. CONNECT TO PA AMPLIFIER. SUBJECT TO FIELD COORDINATION.

SPECIFIC NOTES: (CONTINUED)

8. PROVIDE NEW MICROPHONE OUTLET, CANON XLR/SLR SERIES IN W.P. ENCLOSURE, OR EQUAL TO MATCH THE MICROPHONE. PULL IN NEW MIC. CABLE, WESTPENN AQC-290, TO THE P.A. J-BOX IN OFFICE. CONNECT TO PA AMPLIFIER. PROVIDE NEW MICROPHONE BOGEN #HD0100 WITH BASE #DS5 BY ATLAS/SOUND, PROVIDE MIC BASE ADAPTOR #MICCLIP BY ATLAS/SOUND
9. FOR POOL EQUIPMENT CIRCUITING REFER TO POOL DESIGNERS PLANS. ALL ELECTRICAL EQUIPMENT SHALL BE NEMA 3R
10. PROVIDE STEP DOWN TRANSFORMER FOR DOOR STRIKE. CONNECT PER MANUFACTURER'S INSTRUCTION. COORDINATE IN FIELD.
11. PROVIDE NEW 'FACP'. COORDINATE WITH CITY OF LA I.T. DEPARTMENT.
12. PROVIDE LOCKABLE WEATHERPROOF ENCLOSURE FOR ALL POOL DECK RECEPTACLES..
13. NOT USED.
14. NOT USED.
15. NOT USED.
16. CONNECT TO ELECTRICAL HAND DRYER (EHD) PER MANUFACTURERS INSTRUCTIONS. VERIFY EXACT LOCATION IN FIELD PRIOR TO ROUGHING-IN. SHOULD THE CONTRACTOR NEGLECT TO PERFORM SUCH COORDINATION AS REQUESTED, ALL RELOCATION WILL BE AT CONTRACTOR'S OWN EXPENSE.
17. ALL CONDUITS IN THIS ROOM SHALL BE GRS.
18. TRANSFORMER 'TB' SHALL BE FULLY ENCAPSULATED TYPE.

BUREAU OF ENGINEERING
OFFICIAL RECORD

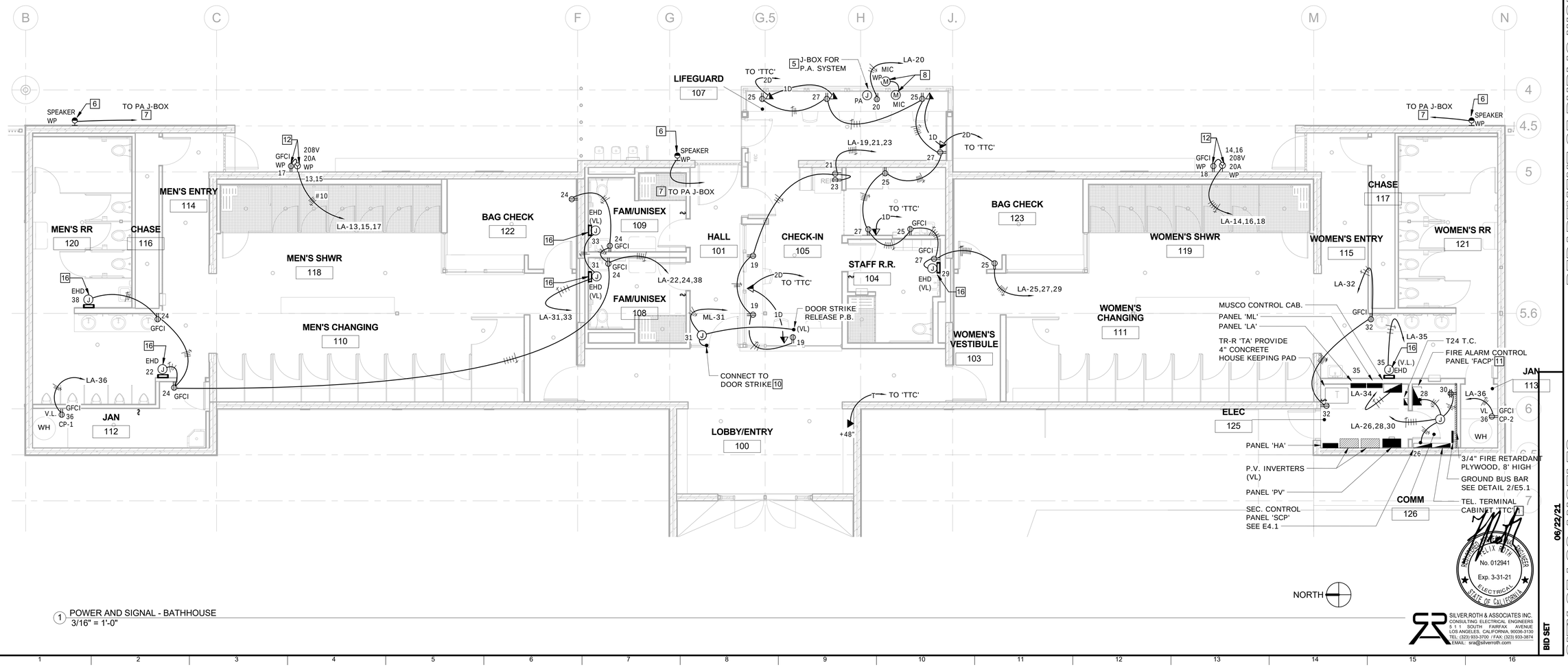

1 POWER AND SIGNAL - BATHHOUSE
3/16" = 1'-0"

NORTH

SILVER,ROTH & ASSOCIATES INC.
CONSULTING ELECTRICAL ENGINEERS
5 1 1 SOUTH FAIRFAX AVENUE
LOS ANGELES, CALIFORNIA 90036-3100
TEL: (323) 933-3700 / FAX: (323) 933-3874
EMAIL: sra@silverroth.com

PROFESSIONAL ENGINEER FELIX ROTH No. 012941 Exp. 3-31-21 ELECTRICAL STATE OF CALIFORNIA

06/22/21

BID SET

THE CITY OF LOS ANGELES OR ITS OFFICERS OR AGENTS SHALL NOT BE RESPONSIBLE FOR THE ACCURACY OR COMPLETENESS OF ELECTRONIC COPIES OF THIS PLAN SHEET.

TTLB TEMPLATE REVISION DATE: 02/2013
SHEET ISSUE DATE: 11/09/18
FILE PATH: C:\Users\dcard\Documents\E_Granada-Hills_2017_SilverRoth.rvt

REVISION DATES (DESIGN STAGE ONLY)

CITY OF LOS ANGELES
DEPARTMENT OF PUBLIC WORKS
BUREAU OF ENGINEERING
ENGINEERING
CITY OF LOS ANGELES

GARY LEE MOORE, PE, ENV SP
CITY ENGINEER

NO.	REVISION DESCRIPTION	DATE	BY

BUILDING NO. -
INDEX NO. RP-300118

VERTICAL CONTROL:
HORIZONTAL CONTROL:
DATE:
Issue Date
Issue Date
Issue Date
Issue Date
Issue Date
Issue Date

ARCHITECT/ENGINEER: Silver Roth & Assoc. LIC. NO.: 012941
ARCHITECTURAL DIVISION
DESIGNED BY: Felix Roth
DRAWN BY: Felix Roth
CHECKED BY: Felix Roth
APPROVED BY: Approver

SHEET TITLE: POWER AND SIGNAL PLANS - BATHHOUSE AND POOL EQ. BLDG
PROJECT: GRANDADA HILLS POOL AND BATHOUSE REPLACEMENT PROJECT
ADDRESS: 16730 CHATSWORTH STREET GRANADA HILLS, CA 91344

WORK ORDER NO. #E170517
PLAN FILE NO.
DRAWING NO. E3.1
SHEET 7 OF SHEETS

PLOTTED:4/15/2020 11:01:30 AM

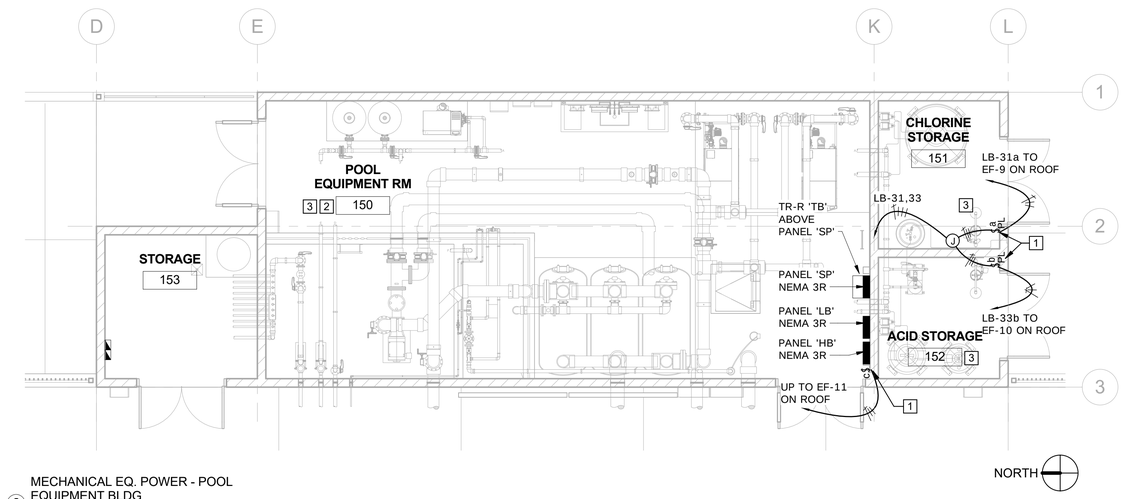

2 MECHANICAL EQ. POWER - POOL EQUIPMENT BLDG
3/16" = 1'-0"

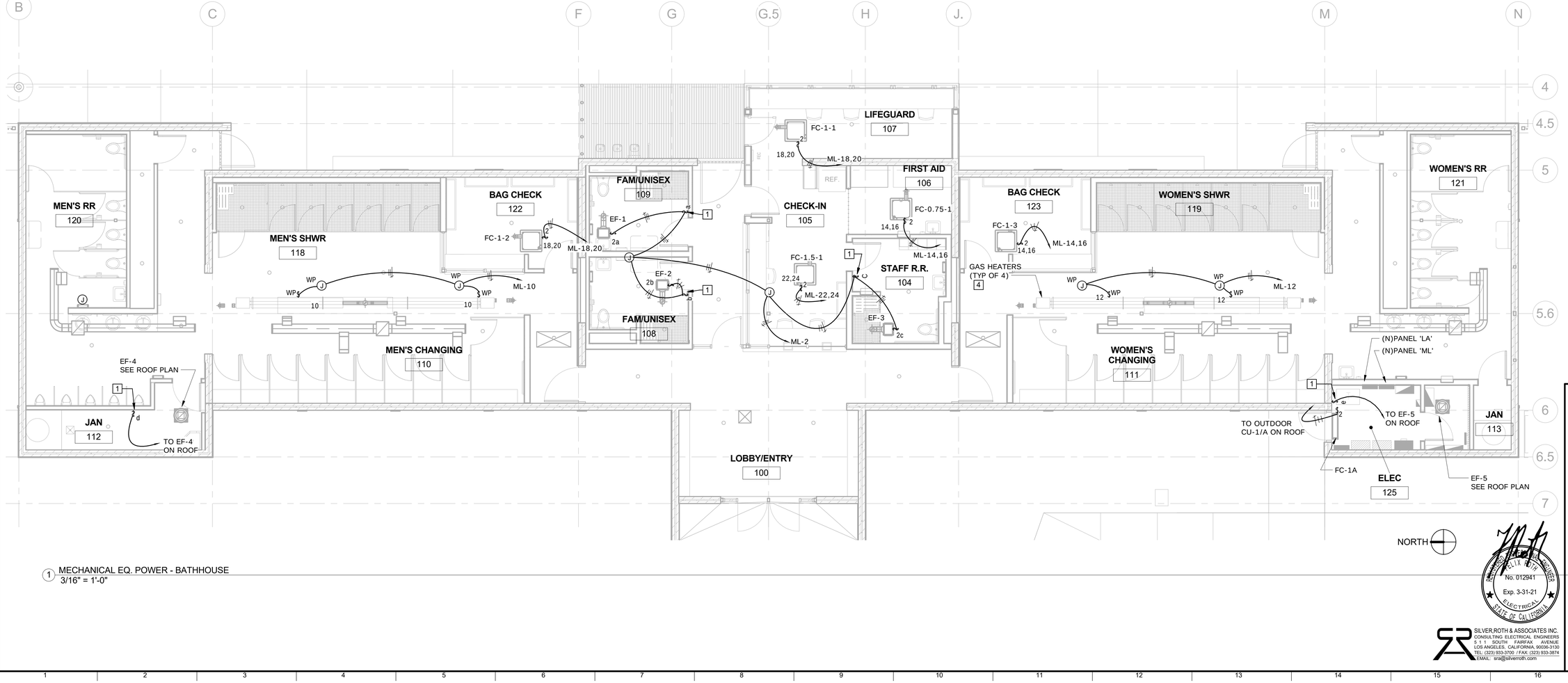

1 MECHANICAL EQ. POWER - BATHHOUSE
3/16" = 1'-0"

SPECIFIC NOTES:

1. PROVIDE TOGGLE SWITCH WITH PILOT LIGHT. ENGRAVE 'EXHAUST FAN'
2. FOR POOL EQUIPMENT CIRCUITING REFER TO AQUATIC DESIGN PLANS. ALL ELECTRICAL EQUIPMENT SHALLL BE NEMA 3R
3. ALL CONDUITS IN THIS ROOM SHALL BE GRS.
4. FOR GAS CONTROL AND WIRING DIAGRAM. REFER TO MECHANICAL PLANS.

BUREAU OF ENGINEERING
OFFICIAL RECORD

ENGINEERING
CITY OF LOS ANGELES

BUREAU OF ENGINEERING

NO.	REVISION DESCRIPTION	DATE	BY

BUILDING NO. -

INDEX NO. RP-300118

CITY OF LOS ANGELES
DEPARTMENT OF PUBLIC WORKS

GARY LEE MOORE, PE, ENV SP
CITY ENGINEER
DATE:

ARCHITECT/ENGINEER: Silver Roth & Assoc. LIC. NO.: 012941
ARCHITECTURAL DIVISION
DESIGNED BY: Felix Roth
DRAWN BY: Felix Roth
CHECKED BY: Felix Roth
APPROVED BY: Approver

VERTICAL CONTROL:
HORIZONTAL CONTROL:

SHEET TITLE: MECHANICAL EQ. POWER - BATHHOUSE AND POOL EQ. BLDG

PROJECT: GRANDADA HILLS POOL AND BATHOUSE REPLACEMENT PROJECT

ADDRESS: 16730 CHATSWORTH STREET
GRANADA HILLS, CA 91344

BID SET
PROJECT DATE ISSUE: 06/22/21

WORK ORDER NO. #E170517
PLAN FILE NO.
DRAWING NO. E3.2
SHEET OF SHEETS

REGISTERED PROFESSIONAL ENGINEER
FELIX ROTH
No. 012941
Exp. 3-31-21
ELECTRICAL
STATE OF CALIFORNIA

SILVER,ROTH & ASSOCIATES INC.
CONSULTING ELECTRICAL ENGINEERS
5 1 1 SOUTH FAIRFAX AVENUE
LOS ANGELES, CALIFORNIA, 90036-3100
TEL: (323) 933-3700 / FAX: (323) 933-3874
EMAIL: sra@silverroth.com

PLOTTED:4/15/2020 11:01:39 AM

REVISION DATES:
(DESIGN STAGE ONLY)

THE CITY OF LOS ANGELES OR ITS OFFICERS OR AGENTS SHALL NOT BE RESPONSIBLE FOR THE ACCURACY OR COMPLETENESS OF ELECTRONIC COPIES OF THIS PLAN SHEET.

TTLB TEMPLATE REVISION DATE: 02/2013
SHEET ISSUE DATE: 11/13/18
FILE PATH: C:\Users\dcard\Documents\E_Granada-Hills_2017_SilverRoth.rvt

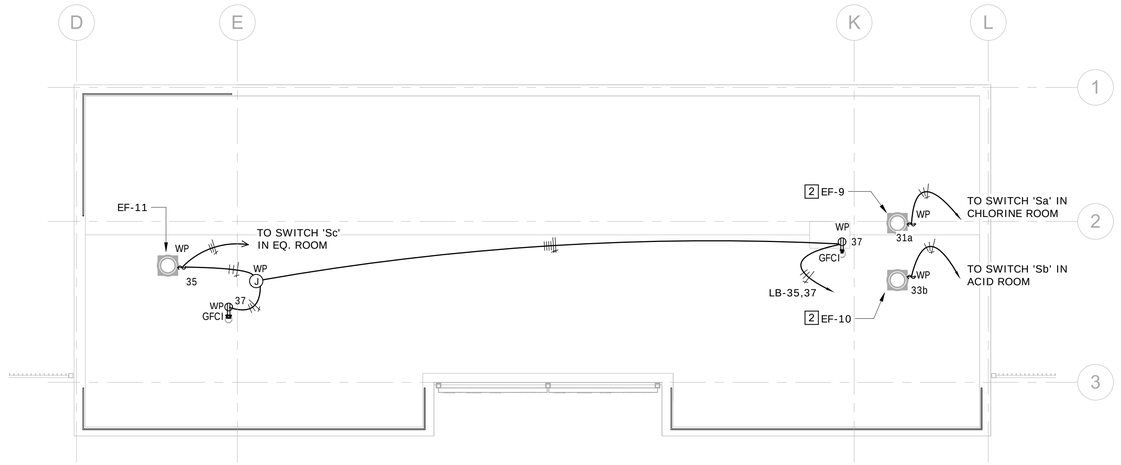

MECHANICAL EQ. POWER - POOL EQ. ROOF
2 3/16" = 1'-0"

NORTH

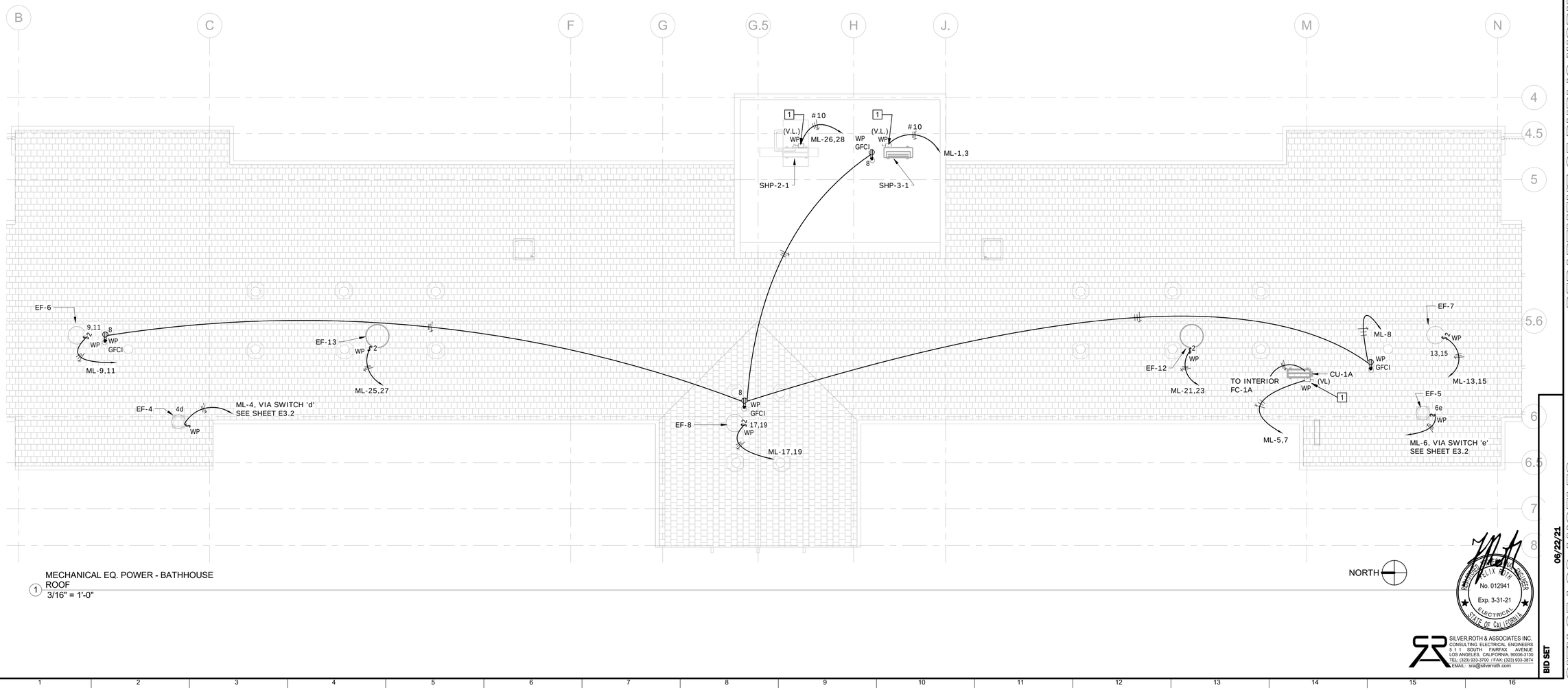

MECHANICAL EQ. POWER - BATHHOUSE ROOF
1 3/16" = 1'-0"

NORTH

SPECIFIC NOTES:

1 PROVIDE DISCONNECT SWITCH 30A-2P, 208V, NEMA 3R, NON-FUSIBLE. VERIFY EXACT MOUNTING LOCATION IN FIELD.

2 ROOF EXHAUST FAN TO BE CONTROLLED VIA ENGRAVED TOGGLE SWITCH IN CHLORINE AND ACID STORAGES ACCORDINGLY. SEE E3.2/2

BUREAU OF ENGINEERING OFFICIAL RECORD

THE CITY OF LOS ANGELES OR ITS OFFICERS OR AGENTS SHALL NOT BE RESPONSIBLE FOR THE ACCURACY OR COMPLETENESS OF ELECTRONIC COPIES OF THIS PLAN SHEET.

REVISION DATES (DESIGN STAGE ONLY)

TTLB TEMPLATE REVISION DATE: 02/2013
SHEET ISSUE DATE: 11/13/18
FILE PATH: C:\Users\dcard\Documents\E_Granada-Hills_2017_SilverRoth.rvt

BUREAU OF ENGINEERING
ENGINEERING
CITY OF LOS ANGELES

NO.	REVISION DESCRIPTION	DATE	BY

INDEX NO. RP-300118
BUILDING NO. -

DEPARTMENT OF PUBLIC WORKS
CITY OF LOS ANGELES
GARY LEE MOORE, PE, ENV SP CITY ENGINEER
DATE:

		Issue Date
ARCHITECT/ENGINEER:	Silver Roth & Assoc. LIC. NO.: 012941	
DESIGNED BY:	Felix Roth	
DRAWN BY:	Felix Roth	
CHECKED BY:	Felix Roth	
APPROVED BY:	Approver	

ARCHITECTURAL DIVISION

VERTICAL CONTROL:
HORIZONTAL CONTROL:

SHEET TITLE: MECHANICAL EQ. ROOF POWER - BATHHOUSE AND POOL EQ. BLDG
PROJECT: GRANDADA HILLS POOL AND BATHOUSE REPLACEMENT PROJECT
ADDRESS: 16730 CHATSWORTH STREET GRANADA HILLS, CA 91344

06/22/21
BID SET

REGISTERED PROFESSIONAL ENGINEER FELIX ROTH No. 012941 Exp. 3-31-21 ELECTRICAL STATE OF CALIFORNIA

SILVER,ROTH & ASSOCIATES INC.
CONSULTING ELECTRICAL ENGINEERS
5 1 1 SOUTH FAIRFAX AVENUE
LOS ANGELES, CALIFORNIA 90036-3100
TEL: (323) 933-3700 / FAX: (323) 933-3874
EMAIL: sra@silverroth.com

WORK ORDER NO. #E170517
PLAN FILE NO.
DRAWING NO. E3.3
SHEET OF SHEETS

PLOTTED:4/15/2020 11:01:42 AM

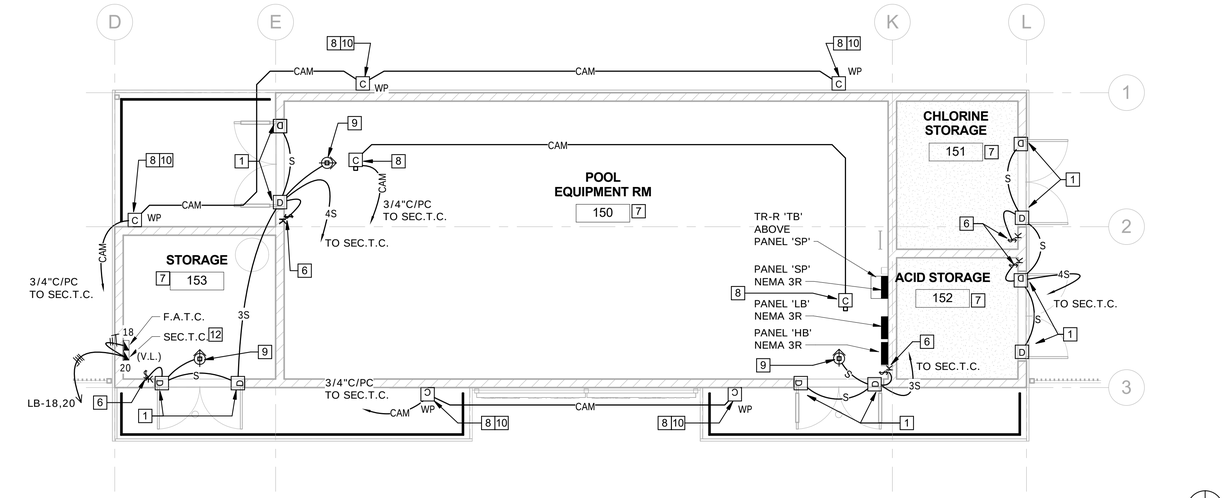

2 SECURITY - POOL EQUIPMENT BLDG
3/16" = 1'-0"

NORTH

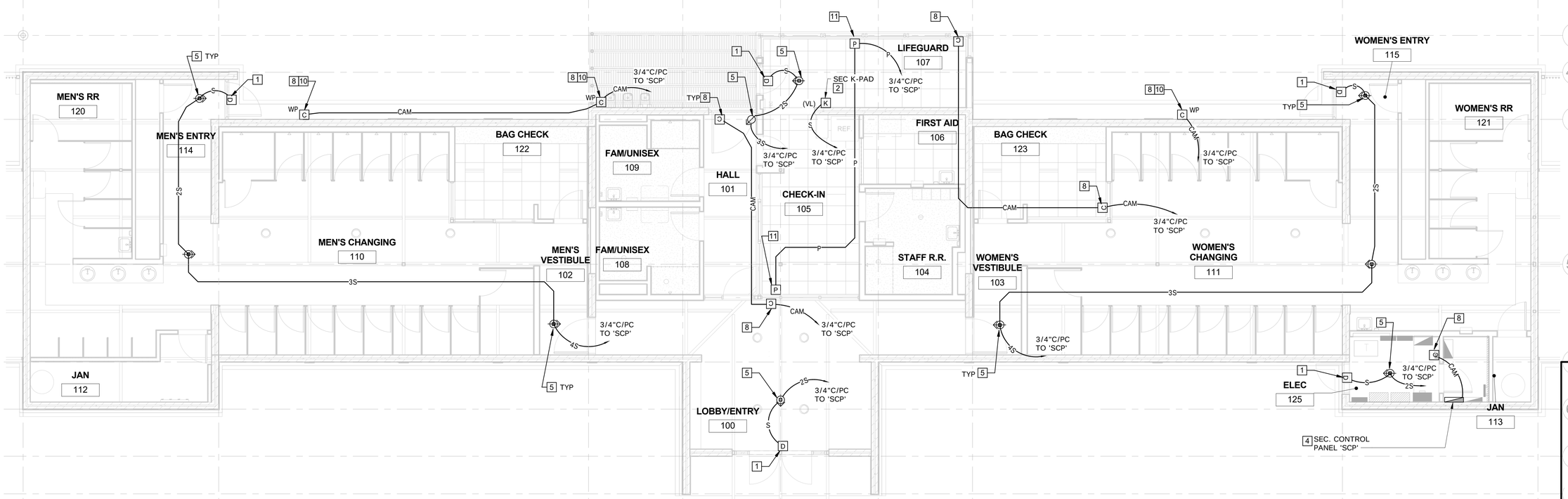

1 SECURITY - BATHHOUSE
3/16" = 1'-0"

NORTH

SPECIFIC NOTES:

1. PROVIDE RECESSED DOOR CONTACTS FOR NEW CONSTRUCTION SURFACE MOUNTED FOR EXISTING. COORDINATE WITH DOOR MANUFACTURER.
2. PROVIDE KEY PAD FOR SECURITY SYSTEM. MOUNT AT + 48"AFF. VERIFY EXACT LOCATION IN FIELD. PROVIDE LOCKABLE PROTECTIVE COVER. CONNECT TO SECURITY CONTROL PANEL PER MANUFACTURERS INSTRUCTIONS.
3. NOT USED.
4. SECURITY CONTROL PANEL 'SCP' COORDINATE WITH CITY OF L.A. LOCAL/REGIONAL IT DEPARTMENT.
5. PROVIDE INTRUSION DETECTION MOTION SENSORS. REFER TO SPECIFICATIONS. VERIFY EXACT LOCATION IN FIELD.
6. PROVIDE SECURITY OVERRIDE KEYPAD. THE KEYPAD SHALL OVERRIDE SECURITY IN THE POOL EQ. ROOM, ACID ROOM, CHLORINE ROOM AND STORAGE ROOM. COORDINATE WITH OWNER. VERIFY LOCATION IN FIELD.
7. ALL CONDUITS IN THIS ROOM SHALL BE GRS
8. PROVIDE 1-GANG BOX FOR SECURITY CAMERAS. COORDINATE WITH ITA DEPARTMENT.
9. PROVIDE MOTION DETECTOR FACING INSIDE THE ROOM. COORDINATE WITH ITA DEPARTMENT.
10. MOUNT EXTERIOR CAMERAS 1' BELOW PARAPET. COORDINATE IN FIELD.
11. PANIC PUSH BUTTON. COORDINATE LOCATION IN FIELD.
12. SECURITY CABINET SHALL BE 18"x12", PADLOACKABLE, QUAD RECEPTACLE INSIDE. PROVIDE SECURITY GUTTER ABOVE THE SEC. TC., BELOW CEILING. COORDINATE IN FIELD.

BUREAU OF ENGINEERING OFFICIAL RECORD

ENGINEERING CITY OF LOS ANGELES

BUREAU OF ENGINEERING

NO.	REVISION DESCRIPTION	DATE	BY

BUILDING NO. -

INDEX NO. RP-300118

CITY OF LOS ANGELES PUBLIC WORKS

DEPARTMENT OF PUBLIC WORKS

GARY LEE MOORE, PE, ENV SP CITY ENGINEER

DATE:

ARCHITECTURAL DIVISION

ARCHITECT/ENGINEER: Silver Roth & Assoc. LIC. NO.: 012941

DESIGNED BY: Felix Roth

DRAWN BY: Felix Roth

CHECKED BY: Felix Roth

APPROVED BY: Approver

Issue Date
Issue Date
Issue Date
Issue Date
Issue Date
Issue Date

VERTICAL CONTROL:
HORIZONTAL CONTROL:

SHEET TITLE: SECURITY SYSTEM PLANS - BATHHOUSE AND POOL EQ. BLDG

PROJECT: GRANDADA HILLS POOL AND BATHOUSE REPLACEMENT PROJECT

ADDRESS: 16730 CHATSWORTH STREET GRANADA HILLS, CA 91344

BID SET
PROJECT DATE ISSUE : 06/22/21

REGISTERED PROFESSIONAL ENGINEER FELIX ROTH No. 012941 Exp. 3-31-21 ELECTRICAL STATE OF CALIFORNIA

SILVER,ROTH & ASSOCIATES INC.
CONSULTING ELECTRICAL ENGINEERS
5 1 1 SOUTH FAIRFAX AVENUE
LOS ANGELES, CALIFORNIA 90036-3100
TEL: (323) 933-3700 / FAX: (323) 933-3874
EMAIL: sra@silverroth.com

WORK ORDER NO. #E170517

PLAN FILE NO.

DRAWING NO. E4.1

SHEET OF SHEETS

PLOTTED:4/15/2020 11:01:44 AM

THE CITY OF LOS ANGELES OR ITS OFFICERS OR AGENTS SHALL NOT BE RESPONSIBLE FOR THE ACCURACY OR COMPLETENESS OF ELECTRONIC COPIES OF THIS PLAN SHEET.

TTLB TEMPLATE REVISION DATE: 02/2013
SHEET ISSUE DATE: 04/07/20

FILE PATH: C:\Users\dcard\Documents\E_Granada-Hills_2017_SilverRoth.rvt

REVISION DATES (DESIGN STAGE ONLY)

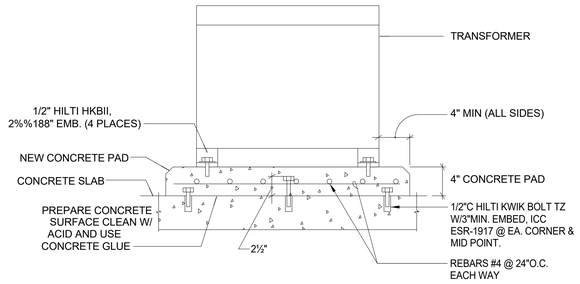

TRANSFORMER MOUNTING ON CONCRETE SLAB(TYP)

SCALE: NTS

6
-

NOT USED

SCALE: NTS

4
-

GENERAL NOTES:

1. GROUND ELECTRODES TO BE INSTALLED IN EXTERIOR FOUNDATIONS AS PER LATEST UFER TEST REPORT.

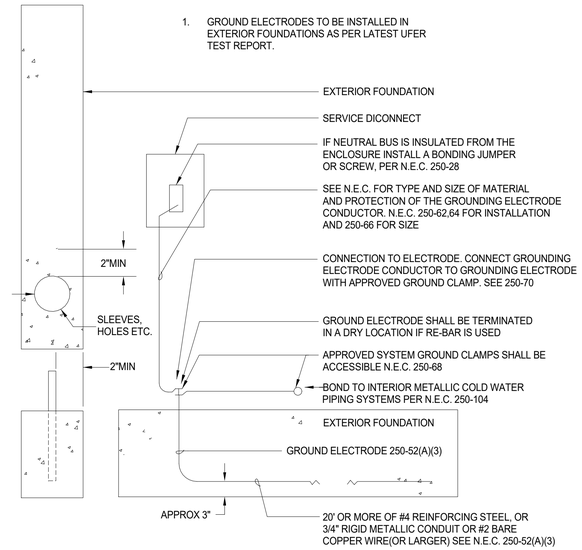

UFER GROUND

SCALE: NTS

3
-

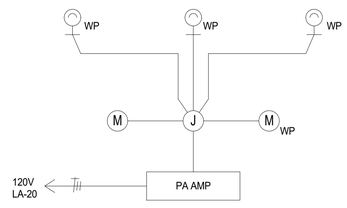

P.A. SYSTEM RISER DIAGRAM

SCALE: NTS

7
-

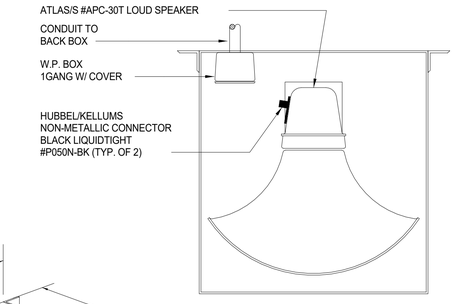

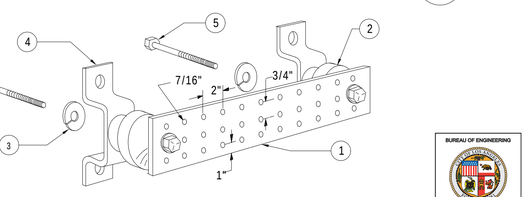

LEGEND

1. COPPER GROUND BAR, 1/4" X 4" X 24", NEWTON INSTRUMENT CO. CAT# B-6142. HOLE CENTERS TO MATCH NEMA DOUBLE LUG CONFIGURATION
2. INSULATORS, NEWTON INSTRUMENT CAT.# 3061-4.
3. 5/8" LOCK WASHERS, NEWTON INSTRUMENT CO. CAT# 3015-8.
4. WALL MOUNTING BRACKET, NEWTON INSTRUMENT CO. CAT# A-6056
5. 5/8"-11 X 1" H.H.C.S. BOLTS, NEWTON INSTRUMENT CO. CAT# 3012-2.
6. ALL GROUNDING AND BONDING SHALL BE IN COMPLIANCE WITH CEC-2007, ART. 250
7. ALL CONNECTIONS TO THE GROUND BUS SHALL BE MADE BY EXOTHERMIC WELDING PROCESS, OR BY IRREVERSIBLE COMPRESSION TYPE CONNECTORS LISTED AS GROUNDING AND BONDING EQUIPMENT.

GROUND BAR DETAIL

SCALE: NTS

2
-

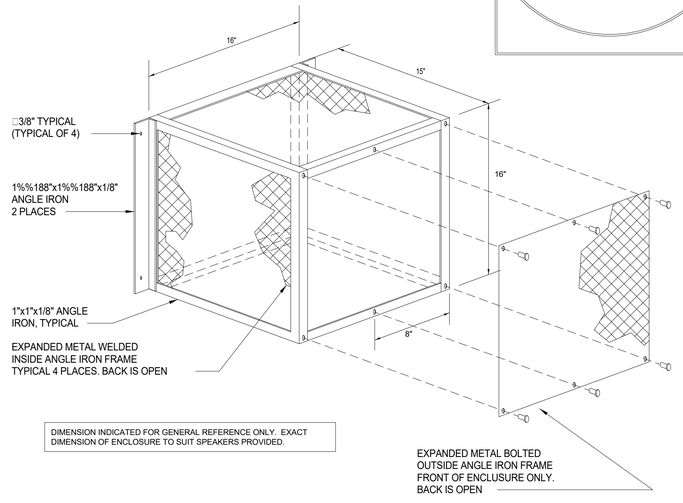

DIMENSION INDICATED FOR GENERAL REFERENCE ONLY. EXACT DIMENSION OF ENCLOSURE TO SUIT SPEAKERS PROVIDED.

TYPE "C-1" EXTERIOR HORN ENCLOSURE DETAIL

SCALE: NTS

5
-

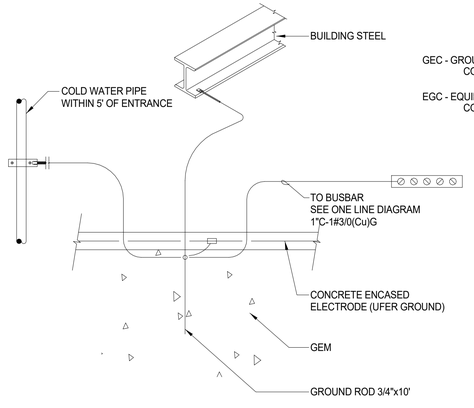

TYPICAL GROUNDING DETAIL

SCALE: NTS

1
-

NOT USED

SCALE: NTS

8
-

THE CITY OF LOS ANGELES OR ITS OFFICERS OR AGENTS SHALL NOT BE RESPONSIBLE FOR THE ACCURACY OR COMPLETENESS OF ELECTRONIC COPIES OF THIS PLAN SHEET.

REVISION DATES
(DESIGN STAGE ONLY)

TTLB TEMPLATE REVISION DATE: 02/2013
SHEET ISSUE DATE: 11/11/18
FILE PATH: C:\Users\dcard\Documents\E_Granada-Hills_2017_SilverRoth.rvt

BUREAU OF ENGINEERING
REVISION DESCRIPTION | DATE | BY
NO.

BUILDING NO. -
INDEX NO. RP-300118

BUREAU OF ENGINEERING
CITY OF LOS ANGELES

DEPARTMENT OF PUBLIC WORKS
CITY OF LOS ANGELES

GARY LEE MOORE, PE, ENV SP
CITY ENGINEER
DATE:

ARCHITECT/ENGINEER: Silver Roth & Assoc. LIC. NO.: 012941
ARCHITECTURAL DIVISION
DESIGNED BY: Felix Roth
DRAWN BY: Felix Roth
CHECKED BY: Felix Roth
APPROVED BY: Approver

VERTICAL CONTROL:
HORIZONTAL CONTROL:
SHEET TITLE: ELECTRICAL DETAILS

PROJECT: GRANDADA HILLS POOL AND BATHOUSE REPLACEMENT PROJECT
ADDRESS: 16730 CHATSWORTH STREET GRANADA HILLS, CA 91344

BID SET
PROJECT DATE ISSUE: 06/22/21

WORK ORDER NO. #E170517
PLAN FILE NO.
DRAWING NO. E5.1
SHEET 5 OF SHEETS

REGISTERED PROFESSIONAL ENGINEER
FELIX ROTH
No. 012941
Exp. 3-31-21
ELECTRICAL
STATE OF CALIFORNIA

SILVER,ROTH & ASSOCIATES INC.
CONSULTING ELECTRICAL ENGINEERS
5 1 1 SOUTH FAIRFAX AVENUE
LOS ANGELES, CALIFORNIA, 90036-3100
TEL: (323) 933-3700 / FAX: (323) 933-3874
EMAIL: sra@silverroth.com

BUREAU OF ENGINEERING
OFFICIAL RECORD

PLOTTED:4/15/2020 11:01:44 AM

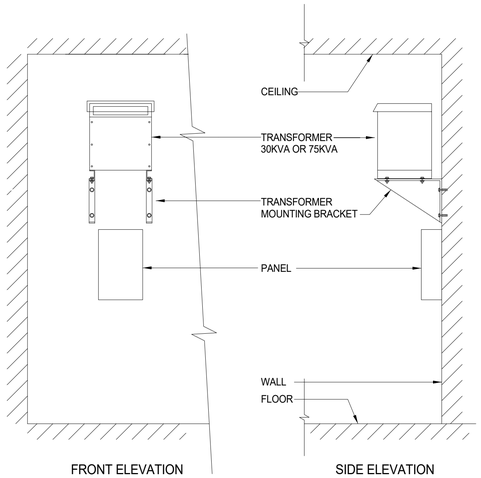

FRONT ELEVATION SIDE ELEVATION

NOTES:

1. TRANSFORMER 30KVA: 30"Hx20"Wx20"D
   APPROX WT = 250 lbs

2. TRANSFORMER 75KVA: 30"Hx30"Wx20"D
   APPROX WT = 500 lbs

3. MAX WEIGHT = 500LBS

   a. STUD WALL:
   4-#12 DARTS SELF DRILLING/SELF TAPPING SCREWS TO A MINIMUM 4"-16GA. METAL STUDS IN WALL. ICBO ER-5805

   b. MASONRY WALL:
   4-3/8"" A307 A.B. WITH 3%%189" MIN. EMBEDMENT IN SOLID GROUTED MASONRY WALL WITH HILTY HY-150 ADHESIVE. ICBO ER-5193

WALL MOUNTED TRANSFORMER

SCALE: NTS

1
-

musco lighting

Control System Summary

Granada Hills Pool And Bathouse Replacement Project [City Of LA] / 196783 - 196783A
Service 1 - Page 2 of 4

Control-Link® Control and Monitoring System

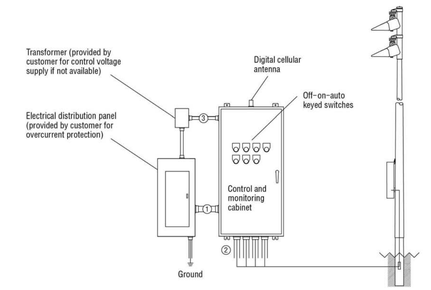

Wire	Description	# of Wires	Typ. Wire Size (AWG)	Max. Wire Length (FT)	Wire from Musco	Notes
1	Line power to contactors, and equipment grounding conductor	Note A	Note B	27	No	A – E
2	Load power to lighting circuits, and equipment grounding conductor	Note A	Note B	N/A	No	A – D
3	Control power (dedicated, 20A)	3	12	N/A	No	C, D

R60-32-00_D

Notes:
A. See voltage and phasing per the notes on cover page.
B. Calculate per load and voltage drop.
C. All conduit diameters should be per code.
D. Refer to control and monitoring system installation instructions for more details on equipment information and the installation requirements.
E. Contact Musco if maximum wire length from circuit breaker to contactor exceeds value in chart.

IMPORTANT: Control wire (3) must be in separate conduit from line and load power wires (1, 2).

T1596195765PSYI-8294534391.pdf

BUREAU OF ENGINEERING
OFFICIAL RECORD

REGISTERED PROFESSIONAL ENGINEER FELIX ROTH No. 012941 Exp. 3-31-21 ELECTRICAL STATE OF CALIFORNIA

SILVER,ROTH & ASSOCIATES INC.
CONSULTING ELECTRICAL ENGINEERS
5 1 1 SOUTH FAIRFAX AVENUE
LOS ANGELES, CALIFORNIA, 90036-3100
TEL: (323) 933-3700 / FAX: (323) 933-3874
EMAIL: sra@silverroth.com

BID SET
PROJECT DATE ISSUE : 06/22/21

CITY OF LOS ANGELES
DEPARTMENT OF PUBLIC WORKS
BUREAU OF ENGINEERING

ENGINEERING
CITY OF LOS ANGELES

NO.	REVISION DESCRIPTION	DATE	BY

INDEX NO. RP-300118
BUILDING NO. -

CITY ENGINEER
DATE:
Issue Date
Issue Date
Issue Date
Issue Date
Issue Date
Issue Date

GARY LEE MOORE, PE, ENV SP CITY ENGINEER
ARCHITECTURAL DIVISION
ARCHITECT/ENGINEER: Silver Roth & Assoc. LIC. NO. 012941
DESIGNED BY: Felix Roth
DRAWN BY: Felix Roth
CHECKED BY: Felix Roth
APPROVED BY: ApproFver

VERTICAL CONTROL:
HORIZONTAL CONTROL:
SHEET TITLE: ELECTRICAL DETAILS
PROJECT: GRANDADA HILLS POOL AND BATHOUSE REPLACEMENT PROJECT
ADDRESS: 16730 CHATSWORTH STREET GRANADA HILLS, CA 91344

WORK ORDER NO. #E170517
PLAN FILE NO.
DRAWING NO. E5.2
SHEET O F SHEETS

PLOTTED:4/15/2020 11:01:45 AM

THE CITY OF LOS ANGELES OR ITS OFFICERS OR AGENTS SHALL NOT BE RESPONSIBLE FOR THE ACCURACY OR COMPLETENESS OF ELECTRONIC COPIES OF THIS PLAN SHEET.

REVISION DATES (DESIGN STAGE ONLY)

TTLB TEMPLATE REVISION DATE: 02/2013
SHEET ISSUE DATE: 02/25/19
FILE PATH: C:\Users\dcard\Documents\E_Granada-Hills_2017_SilverRoth.rvt

STATE OF CALIFORNIA
Indoor Lighting
NRCC-LTI-E (Created 7/18) CALIFORNIA ENERGY COMMISSION

CERTIFICATE OF COMPLIANCE	NRCC-LTI-E
Project Name: Granada Hills Pool and Bathhouse	Report Page: Page 7 of 7
Project Address: 16730 Chatsworth St.	Date Prepared: 12/4/2018

DOCUMENTATION AUTHOR'S DECLARATION STATEMENT

Documentation Author Name:	Felix Roth	Documentation Author Signature:	
Company:	SRA	Signature Date:	12/04/2018
Address:	511 S. Fairfax Ave.	CEA/ HERS Certification Identification (if applicable):	12941
City/State/Zip:	Los Angeles, CA 90036	Phone:	323.933.9700

RESPONSIBLE PERSON'S DECLARATION STATEMENT

I certify the following under penalty of perjury, under the laws of the State of California:

1. **The information provided on this Certificate of Compliance is true and correct.**
2. **I am eligible under Division 3 of the Business and Professions Code to accept responsibility for the building design or system design identified on this Certificate of Compliance (responsible designer)**
3. **The energy features and performance specifications, materials, components, and manufactured devices for the building design or system design identified on this Certificate of Compliance conform to the requirements of Title 24, Part 1 and Part 6 of the California Code of Regulations.**
4. **The building design features or system design features identified on this Certificate of Compliance are consistent with the information provided on other applicable compliance documents, worksheets, calculations, plans and specifications submitted to the enforcement agency for approval with this building permit application.**
5. **I will ensure that a completed signed copy of this Certificate of Compliance shall be made available with the building permit(s) issued for the building, and made available to the enforcement agency for all applicable inspections. I understand that a completed signed copy of this Certificate of Compliance is required to be included with the documentation the builder provides to the building owner at occupancy.**

Responsible Designer Name:	Felix Roth	Responsible Designer Signature:	
Company :	Silver Roth and Associates	Date Signed:	12/04/2018
Address:	511 S. Fairfax Ave.	License:	12941
City/State/Zip:	Los Angeles, CA 90036	Phone:	323.933.3700

LEGEND:

BPS - BYPASS SWITCH, 0-2 HOUR INTERVAL TIMING SWITCH, OPENS AT END OF TIMING PERIOD, MARKED "BYPASS TIMER"

C - LIGHTING CONTACTOR WITH 30A/277V BALLAST RATED CONTACTS, ONE POLE FOR EACH LIGHTING CIRCUIT - SEE PANEL SCHEDULE

PC - PHOTOELECTRIC CONTROL WITH ADJUSTABLE SHUTTER, MOUNTED ON ROOF WITH CELL POSITIONED IN A NORTHERLY DIRECTION

TS - PROGRAMMABLE TIME SWITCH WITH EACH CHANNEL INDEPENDENTLY PROGRAMMABLE FOR 365-DAY LOAD CONTROL; ONE CHANNEL FOR EACH ZONE; CERTIFIED UNDER TITLE 24, CALIFORNIA CODE OF REGULATIONS -

INTERMATIC #ET70000C SERIES
(OR EQUAL BY TORK, PARAGON)

NOTES:

1. FOR CIRCUIT ASSIGNMENTS, REFER TO PANEL SCHEDULE.

TITLE-24 NOTES:

1. PROVIDE ALL REQUIRED WIRING, DEVICES, TIME CLOCKS AND OVERRIDE SWITCHES AS REQUIRED FOR BUILDING LIGHTING SHUT-OFF
2. ALL TIME CLOCKS AND CONTROLS SHALL BE T-24 CERTIFIED

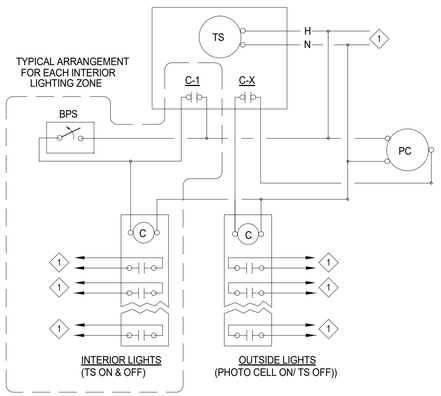

TYPICAL INTERIOR * EXTERIOR LIGHTING CONTROL WIRING DIAGRAM

SCALE: NTS

A
-

STATE OF CALIFORNIA
Indoor Lighting
NRCC-LTI-E (Created 7/18) CALIFORNIA ENERGY COMMISSION

CERTIFICATE OF COMPLIANCE	NRCC-LTI-E
Project Name: Granada Hills Pool and Bathhouse	Report Page: Page 4 of 7
Project Address: 16730 Chatsworth St.	Date Prepared: 12/4/2018

01	02	03	04	05	06		
Area Description	Complete Building or Area Category Primary Function Area	Allowed Density (W/ft²)	Area (ft²)	Allowed Wattage (Watts)	Additional Allowances / Adjustments		
					Footnotes	PAF	Portable Ltg
Mens Bag Check	Corridor, Restrm, Stair, Support	0.6	168	100.8	☐	☐	☐
Uni Restroom	Corridor, Restrm, Stair, Support	0.6	235	141	☐	☐	☐
Lobby Entry	Main Entry Lobby	0.95	465	441.75	☐	☐	☐
Passage	Corridor, Restrm, Stair, Support	0.6	111	66.6	☐	☐	☐
Check-In	Office (<= 250 square feet)	1	223	223	☐	☐	☐
First Aid	Office (<= 250 square feet)	1	96	96	☐	☐	☐
Lifeguard	Office (<= 250 square feet)	1	184	184	☐	☐	☐
Staff Restroom	Corridor, Restrm, Stair, Support	0.6	132	79.2	☐	☐	☐
Womens Entry 115	Locker/Dressing Room	0.7	54	37.8	☐	☐	☐
Womens Bag Check	Corridor, Restrm, Stair, Support	0.6	168	100.8	☐	☐	☐
Womens Dressing	Corridor, Restrm, Stair, Support	0.6	810	486	☐	☐	☐
Womens Chase	Corridor, Restrm, Stair, Support	0.6	60	36	☐	☐	☐
Womens Restroom	Corridor, Restrm, Stair, Support	0.6	554	332.4	☐	☐	☐
Janitor 113	Corridor, Restrm, Stair, Support	0.6	72	43.2	☐	☐	☐
Electrical Room	Elec, Mech, Telephone	0.55	68	37.4	☐	☐	☐
Pool Eq. Room	Elec, Mech, Telephone	0.55	1,019	560.45	☐	☐	☐
Storage	Corridor, Restrm, Stair, Support	0.6	132	79.2	☐	☐	☐
Chlorine Storage	Corridor, Restrm, Stair, Support	0.6	111	66.6	☐	☐	☐
Acid Storage	Corridor, Restrm, Stair, Support	0.6	101	60.6	☐	☐	☐
		TOTAL:	**6,327**	**4,201.5**	See Tables J, K, R for detail		

J. POWER ADJUSTMENT: PORTABLE LIGHTING IN OFFICES
This Section Does Not Apply

K. ADDITIONAL LIGHTING ALLOWANCE: AREA CATEGORY METHOD FOOTNOTES
This Section Does Not Apply

L. TAILORED METHOD GENERAL LIGHTING POWER ALLOWANCE
This Section Does Not Apply

STATE OF CALIFORNIA
Indoor Lighting
NRCC-LTI-E (Created 7/18) CALIFORNIA ENERGY COMMISSION

CERTIFICATE OF COMPLIANCE	NRCC-LTI-E
Project Name: Granada Hills Pool and Bathhouse	Report Page: Page 5 of 7
Project Address: 16730 Chatsworth St.	Date Prepared: 12/4/2018

M. ADDITIONAL LIGHTING ALLOWANCE: TAILORED SPECIAL FUNCTION AREAS
This Section Does Not Apply

N. ADDITIONAL LIGHTING ALLOWANCE: TAILORED WALL DISPLAY
This Section Does Not Apply

O. ADDITIONAL LIGHTING ALLOWANCE: TAILORED FLOOR AND TASK LIGHTING
This Section Does Not Apply

P. ADDITIONAL LIGHTING ALLOWANCE: TAILORED ORNAMENTAL/SPECIAL EFFECTS
This Section Does Not Apply

Q. ADDITIONAL LIGHTING ALLOWANCE: TAILORED VERY VALUABLE MERCHANDISE
This Section Does Not Apply

R. POWER ADJUSTMENT: LIGHTING CONTROL CREDIT (PAF)
This Section Does Not Apply

S. RATED POWER REDUCTION COMPLIANCE BY SPACE
This Section Does Not Apply

STATE OF CALIFORNIA
Indoor Lighting
NRCC-LTI-E (Created 7/18) CALIFORNIA ENERGY COMMISSION

CERTIFICATE OF COMPLIANCE	NRCC-LTI-E
Project Name: Granada Hills Pool and Bathhouse	Report Page: Page 6 of 7
Project Address: 16730 Chatsworth St.	Date Prepared: 12/4/2018

T. DECLARATION OF REQUIRED CERTIFICATES OF INSTALLATION

Table Instructions: Selections have been made based on information provided in previous tables of this document. If any selection needs to be changed, please explain why in Table E. Additional Remarks. These documents must be provided to the building inspector during construction and can be found online at http://www.energy.ca.gov/2015publications/CEC-400-2015-033/appendices/forms/NRCI

YES	NO	Form/Title	Field Inspector Pass	Field Inspector Fail
◉	○	NRCI-LTI-01-E - Must be submitted for all buildings	☐	☐
◉	○	NRCI-LTI-02-E - Must be submitted for a lighting control system, or for an Energy Management Control System (EMCS), to be recognized for compliance.	☐	☐
○	◉	NRCI-LTI-03-E - Must be submitted for a line-voltage track lighting integral current limiter, or for a supplementary overcurrent protection panel used to energize only line-voltage track lighting, to be recognized for compliance.	☐	☐
○	◉	NRCI-LTI-04-E - Must be submitted for two interlocked systems serving an auditorium, a convention center, a conference room, a multipurpose room, or a theater to be recognized for compliance.	☐	☐
○	◉	NRCI-LTI-05-E - Must be submitted for a Power Adjustment Factor (PAF) to be recognized for compliance.	☐	☐
○	◉	NRCI-LTI-06-E - Must be submitted for additional wattage installed in a video conferencing studio to be recognized for compliance.	☐	☐

U. DECLARATION OF REQUIRED CERTIFICATES OF ACCEPTANCE

Table Instructions: Selections have been made based on information provided in previous tables of this document. If any selection needs to be changed, please explain why in Table E. Additional Remarks. These documents must be provided to the building inspector during construction and must be completed through an Acceptance Test Technician Certification Provider (ATTCP). For more information visit: http://www.energy.ca.gov/title24/attcp/providers.html

YES	NO	Form/Title	Field Inspector Pass	Field Inspector Fail
◉	○	NRCA-LTI-02-A - Must be submitted for occupancy sensors and automatic time switch controls.	☐	☐
○	◉	NRCA-LTI-03-A - Must be submitted for automatic daylight controls.	☐	☐
◉	○	NRCA-LTI-04-A - Must be submitted for demand responsive lighting controls.	☐	☐
○	◉	NRCA-LTI-05-A - Must be submitted for institutional tuning power adjustment factor (PAF).	☐	☐

STATE OF CALIFORNIA
Indoor Lighting
NRCC-LTI-E (Created 7/18) CALIFORNIA ENERGY COMMISSION

CERTIFICATE OF COMPLIANCE	NRCC-LTI-E
Project Name: Granada Hills Pool and Bathhouse	Report Page: Page 1 of 7
Project Address: 16730 Chatsworth St.	Date Prepared: 12/4/2018

This document is used to demonstrate compliance with requirements in §110.9, §130.0, §130.1, §140.6, and §141.0(b)2 for indoor lighting scopes using the prescriptive path.

A. GENERAL INFORMATION

01	Project Location (city)	Granada Hills	04	Total Conditioned Floor Area (ft²)	6,327
02	Climate Zone	9	05	Total Unconditioned Floor Area (ft²)	0
03	Occupancy Types Within Project (select all that apply):		06	# of Stories (Habitable Above Grade)	1

☑ Office ☐ Retail ☐ Warehouse ☐ Hotel/Motel ☐ School ☑ Support Areas
☐ Parking Garage ☐ High-Rise Residential ☐ Relocatable ☑ Other (write in):

B. PROJECT SCOPE

Table Instructions: Include any lighting systems that are within the scope of the permit application and are demonstrating compliance using the prescriptive path outlined in §140.6 or §141.0(b)2 for alterations. WARNING: Changing the Calculation Method in this table will result in the deletion of data previously input. If you need to change the calculation method, please open a new form or use "Save As".

Scope of Work	Conditioned Spaces		Unconditioned Spaces	
01	02	03	04	05
My Project Consists of (check all that apply):	Calculation Method	Area (ft²)	Calculation Method	Area (ft²)
☑ New Lighting System	Area Category	6,327	Area Category	0
☐ Altered Lighting System				
Total Area of Work (ft²)	**6,327**		**0**	

C. COMPLIANCE RESULTS

Table Instructions: If any cell on this table says "DOES NOT COMPLY" or "COMPLIES with Exceptional Conditions" refer to Table D. for guidance.

Lighting in conditioned and unconditioned spaces must not be combined for compliance per §140.6(b)1.	Allowed Lighting Power per §140.6(b) (Watts)						Actual Lighting Power per §140.6(a) (Watts)					Compliance Results
	01	02	03	04	05		06	07	08	09		10
	Complete Building §140.6(c)1	Area Category §140.6(c)2	Area Category Footnotes §140.6(c)2G (+)	Tailored §140.6(c)3 (+)	Total Allowed (Watts)		Total Designed (Watts)	Adjustments: Portable Lighting §140.6(a) (-)	Adjustments: PAF Control Credits §140.6(a)2 (-)	Total Actual (Watts) *Includes Adjustments		05 Must be ≥ 09 §140.6
	(See Table I)	(See Table I)	(See Table K)	(See Table L)			(See Table F)	(See Table J)	(See Table R)			
Conditioned:		4,201.5			= **4,201.5**	≥	2,752			= **2,752**		**COMPLIES**
Unconditioned:					=	>						
							Controls Compliance (See Table H for Details)					**COMPLIES**
							Rated Power Reduction Compliance (See Table S for Details)					**Not Applicable**

STATE OF CALIFORNIA
Indoor Lighting
NRCC-LTI-E (Created 7/18) CALIFORNIA ENERGY COMMISSION

CERTIFICATE OF COMPLIANCE	NRCC-LTI-E
Project Name: Granada Hills Pool and Bathhouse	Report Page: Page 2 of 7
Project Address: 16730 Chatsworth St.	Date Prepared: 12/4/2018

D. EXCEPTIONAL CONDITIONS

This table is auto-filled with uneditable comments because of selections made or data entered in tables throughout the form.

No exceptional conditions apply to this project.

E. ADDITIONAL REMARKS

This table includes remarks made by the permit applicant to the Authority Having Jurisdiction.

F. INDOOR LIGHTING FIXTURE SCHEDULE

Table Instructions: Include all permanent designed lighting and all portable lighting in offices.

01	02	03		04	05	06	07	08	09	
Name or Item Tag	Complete Luminaire Description	Specialized Luminaire Types: Track	Specialized Luminaire Types: Portable	Watts per luminaire[1]	How Wattage is determined	Total number luminaires	Exempt per §140.6(a)3	Design Watts	Field Inspector: Pass	Field Inspector: Fail
A	A - LED 2x2 Troffer - 35w	☐	☐	35	NA8 Default	12	☐	420	☐	☐
AE	AE - LED 2x2 EM Troffer - 35w	☐	☐	35	NA8 Default	6	☐	210	☐	☐
B	B - LED 4' Strip - 25w	☐	☐	25	NA8 Default	7	☐	175	☐	☐
C	C - LED 4' Vapor Proof - 31w	☐	☐	31	NA8 Default	29	☐	899	☐	☐
CE	CE - LED 4' EM Vapor Proof - 31w	☐	☐	31	NA8 Default	17	☐	527	☐	☐
D	D - 8' LED Strip - 38w	☐	☐	38	NA8 Default	2	☐	76	☐	☐
DE	DE - 8' LED EM Strip - 38w	☐	☐	38	NA8 Default	3	☐	114	☐	☐
E	E - LED 6" Downlight - 23w	☐	☐	23	NA8 Default	3	☐	69	☐	☐
EE	EE - LED 6" EM Downlight - 23w	☐	☐	23	NA8 Default	3	☐	69	☐	☐
F	F - LED 6" shower Downlight - 13w	☐	☐	13	NA8 Default	3	☐	39	☐	☐
L	L - LED Vanity Lights - 14w	☐	☐	14	NA8 Default	11	☐	154	☐	☐
					Total Designed Watts CONDITIONED SPACES:			**2,752**		

[1]*NOTES: Authority Having Jurisdiction may ask for Luminaire cut sheets to confirm wattage used for compliance per §130.0(c). Wattage used must be the maximum rated for the luminaire, not the lamp.*

G. TRACK LIGHTING

This Section Does Not Apply

STATE OF CALIFORNIA
Indoor Lighting
NRCC-LTI-E (Created 7/18) CALIFORNIA ENERGY COMMISSION

CERTIFICATE OF COMPLIANCE	NRCC-LTI-E
Project Name: Granada Hills Pool and Bathhouse	Report Page: Page 3 of 7
Project Address: 16730 Chatsworth St.	Date Prepared: 12/4/2018

H. INDOOR LIGHTING CONTROLS (Not Including PAFs)

Table Instructions:
*Please include lighting controls for conditioned and unconditioned spaces in this table. When an option having a * is selected, the notes section of this table must be completed. The lighting controls section of the Compliance Summary Table on the first page will show "DOES NOT COMPLY" if the notes are left blank.*

Building Level Controls

01	02	03
Mandatory Demand Response §130.1(e)	Shut-off Controls §130.1(c)	Field Inspector
Required > 10,000 SF	Whole Building: Automatic Time Switch	Pass ☐ Fail ☐

Area Level Controls

04	05	06	07	08	09	10	11	12
Area Description	Complete Building or Area Category Primary Function Area	Area Controls §130.1(a)	Multi-Level Controls §130.1(b)	Shut-Off Controls §130.1(c)	Primary/Skylit Daylighting §130.1(d)	Secondary Daylighting §140.6(d)	Interlocked Systems §140.6(a)1	Field Inspector: Pass / Fail
Locker and Dressing rooms	Locker/Dressing Room	Manual ON/OFF	Dimmer	Occ Sensor	N/A	N/A	☐	☐ ☐
Corridors, Storages, Support	Corridor/Restroom/Support	Manual ON/OFF	Dimmer	Occ Sensor	N/A	N/A	☐	☐ ☐
Lobby	Lobby, Main Entry	Manual ON/OFF	Dimmer	Occ Sensor	N/A	N/A	☐	☐ ☐
Offices	Office <= 250 sqft	Manual ON/OFF	Dimmer	Occ Sensor	N/A	N/A	☐	☐ ☐

*NOTES: Controls with a * require a note in the space below explaining how compliance is achieved.
EX: Conference 1: Primary/Skylight Daylighting: Exempt because less than 120 watts of general lighting; EXCEPTION 1 to §130.1(d)2

13
Plan Sheet Showing Daylit Zones:

I. LIGHTING POWER ALLOWANCE: COMPLETE BUILDING OR AREA CATEGORY METHODS

Table Instructions: Complete the table for each area complying using the Complete Building or Area Category Methods per §140.6(b). Indicate if additional lighting power allowances per §140.6(c) or adjustments per §140.6(a) are being used.

Conditioned Spaces

01	02	03	04	05	06		
Area Description	Complete Building or Area Category Primary Function Area	Allowed Density (W/ft²)	Area (ft²)	Allowed Wattage (Watts)	Additional Allowances / Adjustments: Footnotes	PAF	Portable Ltg
Mens Restroom	Corridor, Restrm, Stair, Support	0.6	480	288	☐	☐	☐
Mens Chase	Corridor, Restrm, Stair, Support	0.6	60	36	☐	☐	☐
Mens Entry	Locker/Dressing Room	0.7	52	36.4	☐	☐	☐
Janitor 112	Corridor, Restrm, Stair, Support	0.6	121	72.6	☐	☐	☐
Mens Dressing	Locker/Dressing Room	0.7	851	595.7	☐	☐	☐

Table Continued

BUREAU OF ENGINEERING
OFFICIAL RECORD

REGISTERED PROFESSIONAL ENGINEER
FELIX ROTH
No. 012941
Exp. 3-31-21
ELECTRICAL
STATE OF CALIFORNIA

SILVER,ROTH & ASSOCIATES INC.
CONSULTING ELECTRICAL ENGINEERS
511 SOUTH FAIRFAX AVENUE
LOS ANGELES, CALIFORNIA, 90036-3130
TEL: (323) 933-3700 / FAX: (323) 933-3874
EMAIL: sra@silverroth.com

BUREAU OF ENGINEERING
CITY OF LOS ANGELES
DEPARTMENT OF PUBLIC WORKS
ENGINEERING
CITY OF LOS ANGELES

NO.	REVISION DESCRIPTION	DATE	BY

BUILDING NO. -
INDEX NO. RP-300118

CITY ENGINEER
DATE:
Issue Date
Issue Date
Issue Date
Issue Date
Issue Date
Issue Date

GARY LEE MOORE, PE, ENV SP
ARCHITECTURAL DIVISION

ARCHITECT/ENGINEER: Silver Roth & Assoc. LIC. NO.: 012941
DESIGNED BY: Felix Roth
DRAWN BY: Author
CHECKED BY: Felix Roth
APPROVED BY: Approver

VERTICAL CONTROL:
HORIZONTAL CONTROL:
SHEET TITLE: TITLE 24

PROJECT: GRANADA HILLS POOL AND BATHOUSE REPLACEMENT PROJECT
ADDRESS: 16730 CHATSWORTH STREET GRANADA HILLS, CA 91344

BID SET
PROJECT DATE ISSUE : 06/22/21

WORK ORDER NO. #E170517
PLAN FILE NO.
DRAWING NO. E6.1
SHEET NO OF SHEETS

THE CITY OF LOS ANGELES OR ITS OFFICERS OR AGENTS SHALL NOT BE RESPONSIBLE FOR THE ACCURACY OR COMPLETENESS OF ELECTRONIC COPIES OF THIS PLAN SHEET.

TTLB TEMPLATE REVISION DATE: 02/2013
SHEET ISSUE DATE: 12/04/18
FILE PATH: C:\Users\dcarst\Documents\E_Granada-Hills_2017_SilverRoth.rvt

REVISION DATES (DESIGN STAGE ONLY)

PLOTTED:4/15/2020 11:01:48 AM

STATE OF CALIFORNIA
Outdoor Lighting
NRCC-LTO-E (Created 9/17) — CALIFORNIA ENERGY COMMISSION

CERTIFICATE OF COMPLIANCE		NRCC-LTO-E
Project Name: Granada Hills Pool and Bathhouse	Report Page:	Page 4 of 6
Project Address: 16730 Chatsworth St.	Date Prepared:	12/4/2018

K. LIGHTING ALLOWANCE: SALES FRONTAGE

This Section Does Not Apply

L. LIGHTING ALLOWANCE: ORNAMENTAL

This Section Does Not Apply

M. LIGHTING ALLOWANCE: PER SPECIFIC AREA

Table Instructions: Please complete this table for areas using the wattage allowance per specific area type from Table 140.7-B. More than one specific area allowance may be taken in a single project, if applicable. However, multiple specific area allowances may not be taken for the exact same area on the site.

01	02	03	04	05	06	07	08	09	10
Area Description	Specific Area Type per Table 140.7-B	CALCULATED ALLOWANCE (Watts)			DESIGN WATTS				Additional Allowance (Watts)
		Specific Area (ft²)[1]	Allowed Density (W/ft²)	Extra Allowance (Watts)	Luminaire Name or Item Tag	Watts per Luminaire	# of Luminaires	Design Watts	
Building Facade	Bldg Façade	1,746	0.35	611.1	G	25	19	475	
							Total Design Watts for this Area:	475	475
								Total Allowance (Watts) All Areas:	475

[1] *FOOTNOTES: See Table 140.7-B for the rules for calculating the specific areas (ft²) for these additional lighting allowances.*

N. EXISTING CONDITIONS POWER ALLOWANCE (alterations only)

This Section Does Not Apply

STATE OF CALIFORNIA
Outdoor Lighting
NRCC-LTO-E (Created 9/17) — CALIFORNIA ENERGY COMMISSION

CERTIFICATE OF COMPLIANCE		NRCC-LTO-E
Project Name: Granada Hills Pool and Bathhouse	Report Page:	Page 5 of 6
Project Address: 16730 Chatsworth St.	Date Prepared:	12/4/2018

O. DECLARATION OF REQUIRED CERTIFICATES OF INSTALLATION

Table Instructions: Selections have been made based on information provided in previous tables of this document. If any selection needs to be changed, please explain why in Table E. Additional Remarks. These documents must be provided to the building inspector during construction and can be found online at http://www.energy.ca.gov/2015publications/CEC-400-2015-033/appendices/forms/NRCI

YES	NO	Form/Title	Field Inspector Pass	Field Inspector Fail
◉	○	NRCI-LTO-01-E - Must be submitted for all buildings.	☐	☐
◉	○	NRCI-LTO-02-E - Must be submitted for a lighting control system; or for an Energy Management Control System (EMCS), to be recognized for compliance.	☐	☐

P. DECLARATION OF REQUIRED CERTIFICATES OF ACCEPTANCE

Table Instructions: Selections have been made based on information provided in previous tables of this document. If any selection needs to be changed, please explain why in Table E. Additional Remarks. These documents must be provided to the building inspector during construction and must be completed through an Acceptance Test Technician Certification Provider (ATTCP). For more information visit: http://www.energy.ca.gov/title24/attcp/providers.html

YES	NO	Form/Title	Field Inspector Pass	Field Inspector Fail
◉	○	NRCA-LTO-02-A - Must be submitted for all outdoor lighting controls except for alterations where controls area added to ≤ 20 luminaires.	☐	☐

STATE OF CALIFORNIA
Outdoor Lighting
NRCC-LTO-E (Created 9/17) — CALIFORNIA ENERGY COMMISSION

CERTIFICATE OF COMPLIANCE		NRCC-LTO-E
Project Name: Granada Hills Pool and Bathhouse	Report Page:	Page 6 of 6
Project Address: 16730 Chatsworth St.	Date Prepared:	12/4/2018

DOCUMENTATION AUTHOR'S DECLARATION STATEMENT

Documentation Author Name:	Felix Roth	Documentation Author Signature:	
Company:	SRA	Signature Date:	12/04/2018
Address:	511 S. Fairfax Ave.	CEA/ HERS Certification Identification (if applicable):	12941
City/State/Zip:	Los Angeles, CA 90036	Phone:	323.933.9700

RESPONSIBLE PERSON'S DECLARATION STATEMENT

I certify the following under penalty of perjury, under the laws of the State of California:

1. **The information provided on this Certificate of Compliance is true and correct.**
2. **I am eligible under Division 3 of the Business and Professions Code to accept responsibility for the building design or system design identified on this Certificate of Compliance (responsible designer)**
3. **The energy features and performance specifications, materials, components, and manufactured devices for the building design or system design identified on this Certificate of Compliance conform to the requirements of Title 24, Part 1 and Part 6 of the California Code of Regulations.**
4. **The building design features or system design features identified on this Certificate of Compliance are consistent with the information provided on other applicable compliance documents, worksheets, calculations, plans and specifications submitted to the enforcement agency for approval with this building permit application.**
5. **I will ensure that a completed signed copy of this Certificate of Compliance shall be made available with the building permit(s) issued for the building, and made available to the enforcement agency for all applicable inspections. I understand that a completed signed copy of this Certificate of Compliance is required to be included with the documentation the builder provides to the building owner at occupancy.**

Responsible Designer Name:	Felix Roth	Responsible Designer Signature:	
Company :	Silver Roth and Associates	Date Signed:	12/04/2018
Address:	511 S. Fairfax Ave.	License:	12941
City/State/Zip:	Los Angeles, CA 90036	Phone:	323.933.3700

STATE OF CALIFORNIA
Outdoor Lighting
NRCC-LTO-E (Created 9/17) — CALIFORNIA ENERGY COMMISSION

CERTIFICATE OF COMPLIANCE		NRCC-LTO-E
This document is used to demonstrate compliance with requirements in §110.9, §130.0, §130.2, §140.7, and §141.0(b)2I for outdoor lighting scopes using the prescriptive path.		
Project Name: Granada Hills Pool and Bathhouse	Report Page:	Page 1 of 6
Project Address: 16730 Chatsworth St.	Date Prepared:	12/4/2018

A. GENERAL INFORMATION

01	Project Location (city)	Granada Hills	04	Total Illuminated Hardscape Area (ft²)	380
02	Climate Zone	9			

03 Outdoor Lighting Zone per Title 24, Part 1 §10-114 or as designated by Authority Having Jurisdiction (AHJ):

☐ LZ-0: Very Low - Undeveloped Parkland ☐ LZ-2: Moderate - Rural Areas ☐ LZ-4: High - Must be reviewed by CA Energy Commission for Approval
☐ LZ-1: Low - Developed Parkland ☑ LZ-3: Moderately High - Urban Areas

B. PROJECT SCOPE

Table Instructions: Include any outdoor lighting systems that are within the scope of the permit application and are demonstrating compliance using the prescriptive path outlined in §140.7 or §141.0(b)2I for alterations.

My project consists of:

01	02
☑ New Lighting System	Must Comply with Allowances from §140.7.
☐ Altered Lighting System	Is your alteration increasing the connected lighting load (Watts)? ○ Yes ○ No

[1] *FOOTNOTES: % of Existing Luminaires Being Altered = (Sum Total of Luminaires Being Added or Altered / Existing Luminaires within the Scope of the Permit Application) x 100*

C. COMPLIANCE RESULTS

Table Instructions: If any cell on this table says "DOES NOT COMPLY" or "COMPLIES with Exceptional Conditions" refer to Table D. for guidance.

Calculation of Total Allowed Lighting Power (Watts) §140.7 or §141.0(b)2L												Compliance Results		
01		02		03		04		05		06		07		08	09
General Hardscape Allowance §140.7(d)1	+	Per Application §140.7(d)2	+	Sales Frontage §140.7(d)2	+	Ornamental §140.7(d)2	+	Per Specific Area §140.7(d)2	OR	Existing Power §141.0(b)2L	=	Total Allowed (Watts)	≥	Total Actual (Watts)	07 Must be ≥ 08
(See Table I)		(See Table J)		(See Table K)		(See Table L)		(See Table M)		(See Table N)				(See Table F)	
601.7	+		+		+		+	475	OR		=	1,076.7	≥	727.8	COMPLIES
										Cutoff Compliance (See Table G for Details)		Not Applicable			
										Controls Compliance (See Table H for Details)		COMPLIES			

STATE OF CALIFORNIA
Outdoor Lighting
NRCC-LTO-E (Created 9/17) — CALIFORNIA ENERGY COMMISSION

CERTIFICATE OF COMPLIANCE		NRCC-LTO-E
Project Name: Granada Hills Pool and Bathhouse	Report Page:	Page 2 of 6
Project Address: 16730 Chatsworth St.	Date Prepared:	12/4/2018

D. EXCEPTIONAL CONDITIONS

This table is auto-filled with uneditable comments because of selections made or data entered in tables throughout the form.

No exceptional conditions apply to this project.

E. ADDITIONAL REMARKS

This table includes remarks made by the permit applicant to the Authority Having Jurisdiction.

F. OUTDOOR LIGHTING FIXTURE SCHEDULE

Table Instructions: For new or altered lighting systems demonstrating compliance with §140.7 (ie Table I has expanded for input), include all luminaires being installed and any existing luminaires remaining or being moved within the spaces covered by the permit application in the Table below. For altered lighting systems using the Existing Power method per §141.0(b)2L (ie Table N has expanded for input), include only new luminaires being installed and replacement luminaires being installed as part of the project scope (ie, do not include existing luminaires remaining or existing luminaires being moved).

Designed Wattage:

01	02	03	04	05	06	07	08	09	10	
Name or Item Tag	Complete Luminaire Description	Watts per luminaire[1]	How Wattage is determined	Total number luminaires	Luminaire Status[2]	Excluded per §140.7(a)	Design Watts	Cutoff Req. > 150W §130.2(b)[3]	Field Inspector Pass	Field Inspector Fail
E	E - LED 6" Downlight - 23w	23	NA8 Default	2	New	☐	46		☐	☐
G	G - LED Facade Wall Sconce - 25w	25	NA8 Default	19	New	☐	475		☐	☐
K	K - LED Rope light - 2.2w/f	2.2	NA8 Default	94	New	☐	206.8		☐	☐
						Total Designed Watts:	727.8			

* NOTES: Selections with a * require a note in the space below explaining how compliance is achieved.
EX: Luminaire is lighting a statue; EXCEPTION 2 to §130.2(b).

G. CUTOFF REQUIREMENTS (BUG)

This Section Does Not Apply

H. OUTDOOR LIGHTING CONTROLS

STATE OF CALIFORNIA
Outdoor Lighting
NRCC-LTO-E (Created 9/17) — CALIFORNIA ENERGY COMMISSION

CERTIFICATE OF COMPLIANCE		NRCC-LTO-E
Project Name: Granada Hills Pool and Bathhouse	Report Page:	Page 3 of 6
Project Address: 16730 Chatsworth St.	Date Prepared:	12/4/2018

Table Instructions: Complete this table demonstrating compliance with controls requirements for all or new or altered luminaires installed as part of the permit application. For alteration projects, luminaires which are existing to remain (ie untouched) and luminaires which are removed and reinstalled (wiring only) do not need to be included in this table even if they are within the spaces covered by the permit application.
*When an option having a * is selected, the notes section of this table must be completed. The lighting controls section of the Compliance Summary Table on the first page will show "DOES NOT COMPLY" if the notes are left blank. For each requirement in columns 02 through 07, do not leave the field blank, instead select NA or Exempt* from the dropdown list to indicate not applicable or an exemption.*

Mandatory Controls

01	02	03	04	05	06	07	08	
Area Description	Motion Sensor: Incandescent>100W §130.2(a)	Shut-Off §130.2(c)1	Auto-Schedule §130.2(c)2	Motion Sensor §130.2(c)3	Sales Frontage §130.2(c)4	Façade, Ornament, Outdoor Dining §130.2(c)5	Field Inspector Pass	Field Inspector Fail
Facade	NA: No Incand>100W	Photocontrol	Yes	Yes	NA: No Sales Front Ltg	No Applicable Lt	☐	☐

*NOTES: Controls with a * require a note in the space below explaining how compliance is achieved.
EX: Not permitted by health & safety to be turned off; EXCEPTION 1 to §130.2(c).*

I. LIGHTING POWER ALLOWANCE (per §140.7)

Table Instructions: Please complete this table for areas using the allowance calculations per §140.7. General Hardscape Allowance is per Table 140.7-A while "Use it or lost it" Allowances are per Table 140.7-B. Indicate which allowances are being used to expand sections for user input. Luminaires that qualify for one of the "Use it or lose it" allowances shall not qualify for another "Use it or lose it" allowance.

	01				
		"Use it or lose it" Allowance (Watts)			
	☑ General Hardscape Allowance	☐ Per Application	☐ Sales Frontage	☐ Ornamental	☑ Per Specific Area
	Table I (below)	Table J	Table K	Table L	Table M

Calculated General Hardscape Lighting Power Allowance per Table 140.7-A

02	03	04	05	06	07	08	09
Area Description	Area Wattage Allowance (AWA)			Linear Wattage Allowance (LWA)			Total General AWA + LWA (Watts)
	Illuminated Area (ft²)	Allowed Density (W/ft²)	Area Allowance (Watts)	Perimeter Length (lf)	Allowed Density (W/lf)	Linear Allowance (Watts)	
Pool Eq. Bldg walkway	380	0.04	15.2	190	0.35	66.5	81.7
						Initial Wattage Allowance for Entire Site (Watts):	520
						Total General Hardscape Allowance (Watts):	601.7

J. LIGHTING ALLOWANCE: PER APPLICATION

This Section Does Not Apply

BUREAU OF ENGINEERING OFFICIAL RECORD

FELIX ROTH — No. 012941 — Exp. 3-31-21 — ELECTRICAL — STATE OF CALIFORNIA

SILVER,ROTH & ASSOCIATES INC.
CONSULTING ELECTRICAL ENGINEERS
511 SOUTH FAIRFAX AVENUE
LOS ANGELES, CALIFORNIA, 90036-3130
TEL: (323) 933-3700 / FAX: (323) 933-3874
EMAIL: sra@silverroth.com

CITY OF LOS ANGELES
DEPARTMENT OF PUBLIC WORKS
BUREAU OF ENGINEERING

NO.	REVISION DESCRIPTION	DATE	BY

BUILDING NO. -
INDEX NO. RP-300118

ENGINEERING
CITY OF LOS ANGELES

CITY ENGINEER: GARY LEE MOORE, PE, ENV SP
ARCHITECTURAL DIVISION
ARCHITECT/ENGINEER: Silver Roth & Assoc. LIC. NO.: 012941
DESIGNED BY: Felix Roth
DRAWN BY: Felix Roth
CHECKED BY: Felix Roth
APPROVED BY: Approver

	DATE:
Issue	Date.
Issue	Date.
Issue	Date.
Issue	Date.
Issue	Date.

VERTICAL CONTROL:
HORIZONTAL CONTROL:
SHEET TITLE: TITLE 24

PROJECT: GRANADA HILLS POOL AND BATHOUSE REPLACEMENT PROJECT
ADDRESS: 16730 CHATSWORTH STREET GRANADA HILLS, CA 91344

BID SET
PROJECT DATE ISSUE : 06/22/21

WORK ORDER NO. #E170517
PLAN FILE NO.
DRAWING NO. E6.2
SHEET 0 OF SHEETS

PLOTTED:4/15/2020 11:01:50 AM

THE CITY OF LOS ANGELES OR ITS OFFICERS OR AGENTS SHALL NOT BE RESPONSIBLE FOR THE ACCURACY OR COMPLETENESS OF ELECTRONIC COPIES OF THIS PLAN SHEET.

TTLB TEMPLATE REVISION DATE: 02/2013
SHEET ISSUE DATE: 12/04/18
FILE PATH: C:\Users\dcard\Documents\E_Granada-Hills_2017_SilverRoth.rvt

REVISION DATES (DESIGN STAGE ONLY)

GENERAL NOTES:

1. THE FOLLOWING GENERAL NOTES ARE APPLICABLE AS STATED BELOW, EXCEPT WHERE SPECIFICALLY INDICATED AND NOTED OTHERWISE ON THE DRAWINGS OR IN THE SPECIFICATIONS.
2. SINGLE LINE DIAGRAMS, ELEVATIONS, SCHEMATICS AND DETAILS SHOWN HEREIN ARE CONCEPTUAL AND ILLUSTRATE ONLY THE FUNCTIONAL RELATIONSHIPS BETWEEN SYSTEM(S) CONPONENTS AND THE DESIGN INTENT OF THE PROJECT.
3. REFERENCE EQUIPMENT SPECIFICATIONS FOR ADDITIONAL INFORMATION REGARDING EQUIPMENT AND MATERIALS USED ON PROJECT.
4. MINIMUM CONDUIT SIZE SHALL BE 3/4".
5. PENETRATION(S) TO ANY FIRE RATED ASSEMBLY SHALL BE FIRE STOPPED WITH APPROVED U.L. LISTED FIRE STOP MATERIAL. INSTALLATION AND APPLICATION OF FIRE STOP MATERIAL, PER MANUFACTURERS INSTRUCTIONS.
6. DEVICE LOCATIONS AS NOTED ON PLANS ARE NEW AND/OR EXISTING AND CONCEPTUAL. CONTRACTOR SHALL LOCATE DEVICES AS SITE CONDITIONS REQUIRE AND AS APPROVED BY THE OWNER/ENGINEER.
7. REFERENCE SPECIFICATIONS FOR ADDITIONAL SYSTEM REQUIREMENTS AND SCOPE OF WORK.
8. THE FIRE ALARM SYSTEM SHALL PASS TESTS REQUIRED BY LOCAL FIRE DEPARTMENTS, INCLUDING CHIEF'S REQULATION NO. 4 PROGRAM REQUIRED BY CITY OF LOS ANGELES DEPARTMENT OF FIRE.
9. PAINTING, PATCHING AND FINISHES FOR ALL DEVICES LOCATED IN EXISTING AREAS SHALL MATCH EXISTING FINISHES AND MUST BE APPROVED AND COORDINATED WITH THE OWNER/ENGINEER.
10. WORKMANSHIP AND MATERIALS WILL CONFORM TO MOST CURRENT UNIFORM BUILDING CODE (UBC) STANDARDS, SPECIFICATIONS AND DETAILS FOR CONTRUCTION AS FURNISHED BY THE CONTRACT DRAWINGS. WORKMANSHIP AND MATERIALS NOT IN CONFORMANCE WITH THE CONTRACT DRAWINGS AND SPECIFICATIONS ARE SUBJECT TO REMOVAL AND/OR REPALCEMENT AT CONTRACTOR'S EXPENSE.

FIRE ALARM SYSTEM NOTES:

1. FIRE ALARM SYSTEM SHALL COMPLY WITH NFPA 72 (1999 ED.)AND NFPA 101 STANDARDS, TITLE 24 AND ADA REQUIREMENTS, CALIFORNIA ELECTRICAL CODE AND CALIFORNIA EDUCATIONAL CODE.
2. ALL WIRING, INITIATING DEVICE AND ANNUNCIATOR PANEL SHALL BE SUPERVISED TO THE PRINCIPAL POINT OF ANNUNCIATION (F/A PANEL TO SUPERVISE THE ANNUNCIATOR PANEL, ALL CIRCUITS AND INITIATING DEVICES).
3. FIRE ALARM WIRING SHALL NOT BE INSTALLED SAME CONDUITS, RACE WAYS OR BOXES WITH ANY OTHER SYSTEMS, POWER OR SIGNAL. IN UNDERGROUND SIGNAL BOXES PROVIDE PHYSICAL SEPARATION BETWEEN F.A. WIRING AND OTHER SIGNAL SYSTEMS.
4. WIRING SHALL NOT BE LOOPED THROUGH DEVICES; WIRE MUST BE CUT FOR IN AND OUT AND SHALL BE TERMINATED ON THE TERMINAL BLOCKS INSIDE DEVICES.
5. POINT AND COMMON ANNUNCIATION AND T-TAPPING PROHIBITED. NO WIRE SPLICING IS ALLOWED.
6. ALL WIRING SHALL BE IN CONDUIT OR WIREMOLD MIN. SIZE 2100 U.N.O. CONDUIT FILL SHALL BE PER TABLE 3B OF CALIFORNIA ELECT. CODE.
7. ALL TERMINATION IN PULL BOXES AND TERMINAL CABINETS SHALL BE ON BOX MOUNTED TERMINAL BLOCKS.
8. THE FACP IS NOT TO BE USED AS A TERMINAL CABINET.
9. MINIMUM CONDUIT SIZE AT RISER SHALL BE 3/4" U.O.N. CONTRACTOR TO ADJUST SIZE FOR FIELD CONDITIONS (I.E. NO. OF BENDS ETC.) BUT SHALL NOT BE SMALLER THAN 3/4".
10. ALL FIRE ALARM WIRING MUST TEST FREE OF OPENS, SHORTS AND GROUNDS.
11. DEVICE LOCATIONS AS NOTED ON PLANS ARE CONCEPTUAL AND ILLUSTRATE ONLY THE FUNCTIONAL RELATIONSHIP BETWEEN COMPONENTS OF THE SYSTEM. CONTRACTOR SHALL LOCATE DEVICES AS SITE CONDITIONS REQUIRE AND AS APPROVED BY THE OWNER.
12. CONDUIT AND JUNCTION\BACK BOXES ARE NOT TO BE USED FOR UNRELATED WIRING.
13. PENETRATIONS TO FIRE-RATED ASSEMBLIES SHALL BE PER UL APPROVED THROUGH-PENETRATION FIRE-RESISTANT MATERIAL. REFER TO DRAWING FE3.3 DETAIL D. THROUGH-PENETRATION FIRE STOPPING FOR ALL FIRE RATED WALLS, FLOOR/CEILINGS AND ASSEMBLIES SHALL HAVE AN "F" OR "T" RATING PER THE CALIFORNIA BUILDING CODE AND STANDARDS.
14. AUDIO VISUAL DEVICES SHALL BE INSTALLED PER TITLE 24, SECTION 7204 REQUIREMENTS.
15. CONTRACTOR SHALL FIELD VERIFY ALL LOCATION(S) OF WATER FLOW AND TAMPER SWITCHES (TYPICAL).
16. FIRE ALARM CONTROL PANEL SHALL BE LOCKED AND SHALL BE ACCESSIBLE ONLY TO FIRE DEPT. PERSONNEL, AUTHORIZED MAINTENANCE PERSONNEL. FACP SHALL BE MARKED "FIRE ALARM CONTROL PANEL". FACP SHALL COMPLY WITH NFPA 72.
17. ANY DEVIATION FROM THESE PLANS NECESSARY DUE TO FIELD CONDITIONS MUST BE APPROVED BY FIRE ALARM SYSTEM ENGINEER AND DETAILED AND RECORDED ON FIELD "AS BUILT" DRAWINGS.
18. ANY FIELD CONDITION MISREPRESENTED IN THESE DRAWINGS SHALL BE BROUGHT TO THE ATTENTION OF THE FIRE SYSTEM ENGINEER.
19. FIRE ALARM SHALL BE AUDIBLE AT A SOUND LEVEL OF 15dB ABOVE AMBIENT NOISE LEVEL IN PUBLIC AREAS IN ACCORDANCE WITH NFPA 72 1999 EDITION SECTION 4-3.2.2.
20. ALL EQUIPMENT, I.E. AUTOMATIC DETECTION DEVICES, MANUAL PULL STATIONS, DUCT DETECTORS, ETC., SHALL BE INSTALLED AND LOCATED IN ACCORDANCE WITH LISTINGS AND APPLICABLE PROVISIONS OF THE TITLE 24, PARTS 2,3,4 & 9 STANDARDS. ALL EXTERIOR DEVICES SHALL BE LISTED FOR OUTDOOR USE AND MOUNTED IN APPROVED WEATHER PROOF BOXES AND IN ACCORDANCE WITH TITLE 19. CHAPTER 1.5, ARTICLE 1, SECTION 200.

FIRE ALARM SYSTEM SEQUENCE OF OPERATIONS

DEVICE/ACTION	Manual Pull Stations	Area Smoke Detector	Area Heat Detectors	Sprinkler Water Flow	Sprinkler Bell Tamper Switch	Power Failure	Notes
Annunciate alarm at FACP and Remote Annunciator	X	X	X	X			
Annunciate supervisory condition at FACP and remote Annunciator					X		
Annunciate trouble at FACP and Remote Annunciator	X	X	X	X	X	X	[1]
Activate Audible/Visual Signal Throughout School (Alarm)	X	X	X	X			
Contact central Station (UDACT)	X	X	X	X	X	X	
Mute Local Public Address System	X	X	X	X			
Disable Passing Signals	X	X	X	X			
Shunt Down Air Handling Equipment		X	X	X			
Close Smoke/Fire Dampers		X	X	X			[3]
Close Smoke and Fire Doors		X	X	X			[4]
Open Smoke Control Vents		X	X	X			
Lower Fire Curtain		X	X	X			
Turn on General House Lights	X	X	X	X			
Sound Sprinkler Bell				X			

NOTES:
[1] Indicate Trouble on wiring fault or device as required
[3] Close only smoke and fire dampers in the building or area where alarm condition occurs
[4] Close only smoke and fire doors where alarm condition occurs.

FA SYMBOL LEGEND

SYMBOL	DESCRIPTION	MANUFACTURE	MODEL NO
FACP	FIRE ALARM CONTROL PANEL	EST	EST3
	BATTERY CABINET		
	BATTERY A.H. PROVIDED		40 A.H.
RPS	REMOTE POWER SUPPLY BATTERY A.H. PROVIDED	EST	BPS6A 7 A.H.
ANN	LCD ANNUNCIATOR	EST	ENVOY SERIES
M	PULL STATION WITH MONITOR MODULE PULL STATION COVER	EST EST EST	SIGA-270 SIGA-CT1 STI-1100
SD	IONIZATION SMOKE DETECTOR SMOKE DETECTOR BASE	EST	SIGA-IS SIGA-SB
HD	HEAT DETECTOR HEAT DETECTOR BASE	EST	SIGA-HFS SIGA-SB
CT1	SINGLE INPUT MODULE	EST	SIGA-CT1
	STROBE(15cd) WALL	EST	202-5A
30cd	STROBE(30cd) WALL	EST	202-5A
F	HORN/STROBE(15cd) WALL	EST	757-5A
F 30cd	HORN/STROBE(30cd) WALL	EST	757-3A
WP	WEATHER PROOF HORN	EST	757-A
FCC	FIRE CONTROL COMMUNICATOR	SILENT KNIGHT	5104B
SB	SPRINKLER BELL	NOTIFIER	KMS-10-24
EOL	15 Kohm/47 Kohm END OF LINE RESISTER AS REQ'D		

WIRE SCHEDULE

DESIG.	WIRE/CABLE	CIRCUIT TYPE
A	2 #14 THHN/THWN (PINK+, GREY -)	AUDIBLE
V	2 #12 THHN/THWN (PINK+, BLUE-)	VISUAL
D	2 #18 WEST PENN D975	INDOOR DATA LOOP
uD	4#16 WEST PENN AQ 3245	UNDERGROUND DATA LOOP
N	2 #18 WESTPENN D975, 2#12	ANNUNCIATOR
P	2 #14 THHN/THWN (BLUE+, BROWN -)	24VDC POWER

NOTES:

1. INITIATING DEVICE CIRCUITS SHALL BE WIRED CLASS "B" FOR WIRING STYLES REFER TO DETAILS 2 AND 6 ON SHEET FA-3.0
2. NOTIFICATION DEVICE CIRCUITS SHALL BE WIRED CLASS "B" FOR WIRING STYLES REFER TO DETAILS 2 AND 6 ON SHEET FA-3.0
3. ALL EST-3 VISUAL(STROBE) ARE SELF SYNCHRONIZED. NO ADDITIONAL SYNCHRONIZATION MODULE IS REQUIRED.
4. AUDIBLE NOTIFICATION CIRCUITS AND DEVICES SHALL BE PROGRAMMED FOR CODED OUTPUT AS CALIFORNIA MARCH CODE (TEMPORAL CODE 3).
5. SMOKE AND HEAT DETECTOR COVERAGE SHALL BE PER NFPA 72, CHAP 5 FOR TYPE OF CEILING AND FRAMING.
6. PROVIDE TVSS AT INTERIOR PULL BOX OR FATC WHERE CIRCUITS ENTER OR LEAVE BUILDING. SEE DETAIL S/FA3.3 FOR ADDITIONAL REQUIREMENTS.

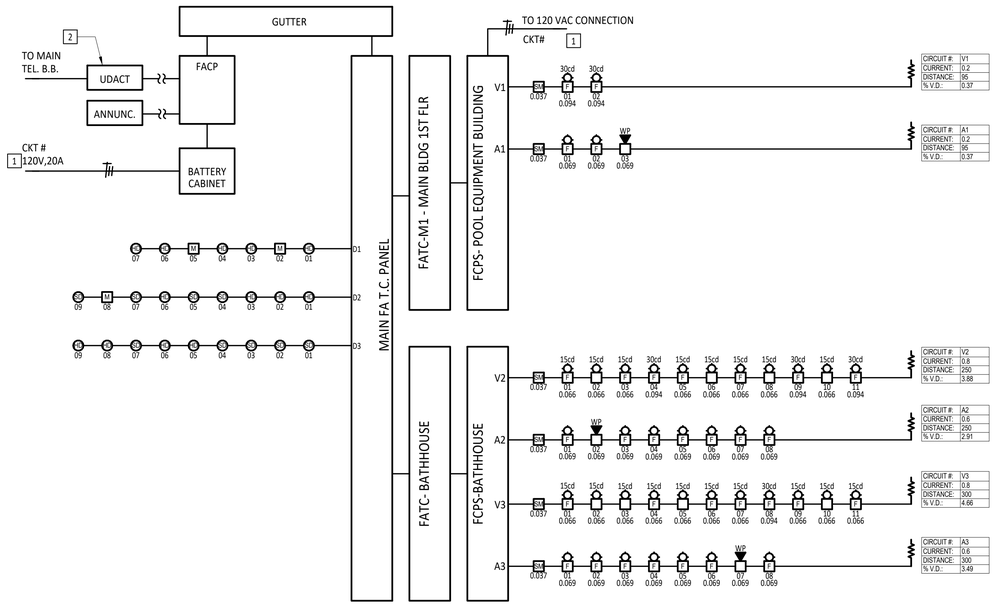

FIRE ALARM RISER DIAGRAM

SCALE: NTS

SPECIFIC NOTES:

1. PROVIDE DEDICATED 20A-1P CIRCUIT BREAKER TO MATCH EXISTING. PROVIDE LOCK-ON DEVICE. LABEL 'FIRE ALARM CONTROL CIRCUIT' CONTRACTOR SHALL PROVIDE TVSS MODULE AT THE POWER SUPPLY.
2. C.S.F.M. APPROVED TELEPHONE DIALER PER SPECIFICATIONS

VOLTAGE DROP METHOD:

$$\frac{2 \times \text{DISTANCE} \times \text{AMPS} \times \text{OHMS}}{\text{VOLTS} \times 1000} \times 100 = \text{VD\%}$$

WIRE RESISTANCE = 1.98 /1000Ω
CIRCULAR MILLS = 12GA = 6530
VOLTAGE = 24-15% (UL 464) = 20.4 VOLTS

BUREAU OF ENGINEERING — OFFICIAL RECORD

BATTERY CALCULATIONS FOR FACP AT BATHHOUSE

QTY.	EST (GENESIS) DESCRIPTION	STANDBY MODULE	STANDBY TOTAL	ALARM MODULE	ALARM TOTAL
1	CPU	0.07000	0.07000	0.19000	0.19000
2	LDC	0.05300	0.10600	0.05300	0.10600
2	REMOTE POWER SUPPLY (RPS)	0.05300	0.10600	0.05300	0.10600
1	SDDC	0.15700	0.15700	0.17700	0.17700
1	SSDC	0.08100	0.08100	0.08100	0.08100
4	IDC 8/4	0.05000	0.20000	0.33000	1.32000
3	PULL STATION	0.00025	0.00075	0.00040	0.00120
8	SMOKE DETECTOR	0.00045	0.00360	0.00045	0.00360
13	HEAT DETECTOR	0.00025	0.00325	0.00040	0.00520
		TOTAL	0.72760		1.99000
		STANBY		ALARM	
		24 HOURS	17.46	5 MIN.	0.17
		TOTAL	17.63 A.H. REQUIRED		
			40.00 A.H. PROVIDED		
	25% DERATING FACTOR		10.00 A.H.		
	TOTAL DERATED		30.00 A.H.		
	A.H. SPARE CAPACITY		12.37 A.H.		
	% SPARE CAPACITY		41.24 %		

BATTERY CALCULATIONS FOR: RPS-1 AT BATHHOUSE

FOR CIRCUITS: V2, A2, V3, A3

QTY.	EST (GENESIS) DESCRIPTION	STANDBY MODULE	STANDBY TOTAL	ALARM MODULE	ALARM TOTAL
1	CPU	0.070	0.070	0.190	0.19
18	STROBE (15cd)			0.058	1.04
4	STROBE (30cd)			0.100	0.40
0	STROBE (75cd)			0.141	0.00
0	STROBE (110cd)			0.180	0.00
14	HORN (INDOOR)			0.028	0.39
0	HORN - MINI (INDOOR)			0.017	0.00
2	HORN (OUTDOOR)			0.040	0.08
0	SPRINKLER BELL			0.085	0.00
		TOTAL	0.070		2.10
		STANBY		ALARM	
		24 HOURS	1.68	5 MIN.	0.1
		TOTAL	1.85 A.H. REQUIRED		
			7.00 A.H. PROVIDED		
	25% DERATING FACTOR		1.75 A.H.		
	TOTAL DERATED		5.25 A.H.		
	A.H. SPARE CAPACITY		3.40 A.H.		
	% SPARE CAPACITY		64.67 %		

BATTERY CALCULATIONS FOR: RPS-2 AT POOL EQ. BUILDING

FOR CIRCUITS: V1, A1, 0, 0

QTY.	EST (GENESIS) DESCRIPTION	STANDBY MODULE	STANDBY TOTAL	ALARM MODULE	ALARM TOTAL
1	CPU	0.070	0.070	0.190	0.190
0	STROBE (15cd)			0.058	0.000
2	STROBE (30cd)			0.100	0.200
0	STROBE (75cd)			0.141	0.000
0	STROBE (110cd)			0.180	0.000
2	HORN (INDOOR)			0.028	0.056
0	HORN - MINI (INDOOR)			0.017	0.000
1	HORN (OUTDOOR)			0.040	0.040
0	SPRINKLER BELL			0.085	0.000
		TOTAL	0.070		0.486
		STANBY		ALARM	
		24 HOURS	1.68	5 MIN.	0.04
		TOTAL	1.72 A.H. REQUIRED		
			7.00 A.H. PROVIDED		
	25% DERATING FACTOR		1.75 A.H.		
	TOTAL DERATED		5.25 A.H.		
	A.H. SPARE CAPACITY		3.53 A.H.		
	% SPARE CAPACITY		67.23 %		



SILVER,ROTH & ASSOCIATES INC.
CONSULTING ELECTRICAL ENGINEERS
511 SOUTH FAIRFAX AVENUE
LOS ANGELES, CALIFORNIA, 90036-3130
TEL: (323) 933-3700 / FAX: (323) 933-3874
EMAIL: sra@silverroth.com

CITY OF LOS ANGELES
DEPARTMENT OF PUBLIC WORKS
BUREAU OF ENGINEERING
ENGINEERING — CITY OF LOS ANGELES

GARY LEE MOORE, PE, ENV SP — CITY ENGINEER
DATE:
ARCHITECTURAL DIVISION
ARCHITECT/ENGINEER: Silver Roth & Assoc. LIC. NO.: 012941
DESIGNED BY: Felix Roth
DRAWN BY: Felix Roth
CHECKED BY: Felix Roth
APPROVED BY: Approver

NO.	REVISION DESCRIPTION	DATE	BY

BUILDING NO. -
INDEX NO. RP-300118

BID SET
PROJECT DATE ISSUE : 06/22/21

CITY OF LOS ANGELES
VERTICAL CONTROL:
HORIZONTAL CONTROL:

SHEET TITLE: FIRE ALARM GENERAL NOTES AND SPECIFICATIONS
PROJECT: GRANDADA HILLS POOL AND BATHOUSE REPLACEMENT PROJECT
ADDRESS: 16730 CHATSWORTH STREET GRANADA HILLS, CA 91344

WORK ORDER NO. #E170517
PLAN FILE NO.
DRAWING NO. FA0.1
SHEET 0 OF SHEETS

PLOTTED:4/15/2020 11:01:50 AM

THE CITY OF LOS ANGELES OR ITS OFFICERS OR AGENTS SHALL NOT BE RESPONSIBLE FOR THE ACCURACY OR COMPLETENESS OF ELECTRONIC COPIES OF THIS PLAN SHEET.
TTLB TEMPLATE REVISION DATE: 02/2013
SHEET ISSUE DATE: 06/06/19
FILE PATH: C:\Users\dcard\Documents\E_Granada-Hills_2017_SilverRoth.rvt
REVISION DATES (DESIGN STAGE ONLY)

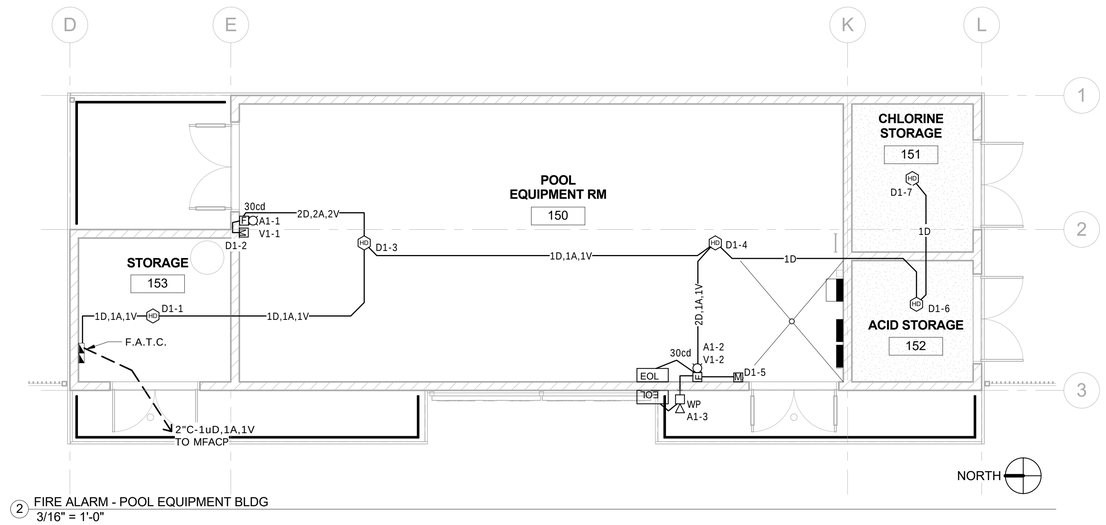

2 FIRE ALARM - POOL EQUIPMENT BLDG
3/16" = 1'-0"

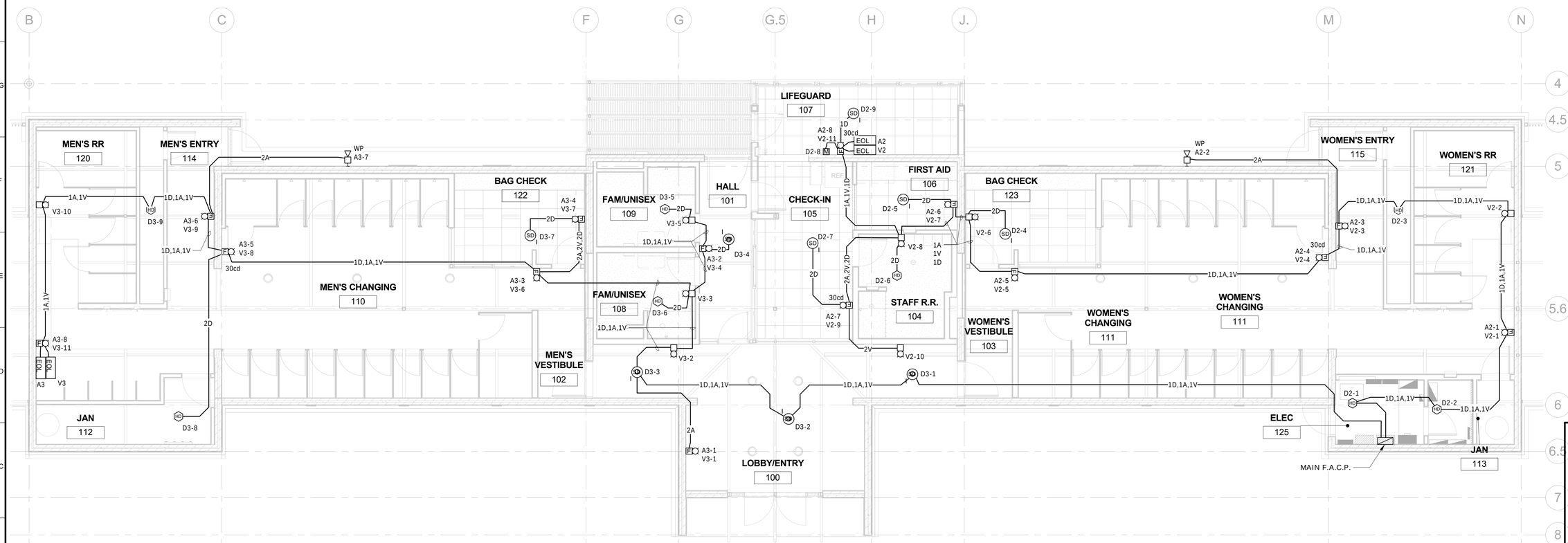

1 FIRE ALARM - BATHHOUSE
3/16" = 1'-0"

THE CITY OF LOS ANGELES OR ITS OFFICERS OR AGENTS SHALL NOT BE RESPONSIBLE FOR THE ACCURACY OR COMPLETENESS OF ELECTRONIC COPIES OF THIS PLAN SHEET.

TTLB TEMPLATE REVISION DATE: 02/2013
SHEET ISSUE DATE: 02/13/19
FILE PATH: C:\Users\dcard\Documents\E_Granada-Hills_2017_SilverRoth.rvt

REVISION DATES
(DESIGN STAGE ONLY)

BUREAU OF ENGINEERING
OFFICIAL RECORD

BUREAU OF ENGINEERING
ENGINEERING
CITY OF LOS ANGELES

NO.	REVISION DESCRIPTION	DATE	BY

BUILDING NO. -

INDEX NO. RP-300118

DEPARTMENT OF PUBLIC WORKS
CITY OF LOS ANGELES

GARY LEE MOORE, PE, ENV SP
CITY ENGINEER

DATE:

ARCHITECTURAL DIVISION

ARCHITECT/ENGINEER: Silver Roth & Assoc. LIC. NO.: 012941
DESIGNED BY: Felix Roth
DRAWN BY: Felix Roth
CHECKED BY: Felix Roth
APPROVED BY: Approver

Issue Date
Issue Date
Issue Date
Issue Date
Issue Date
Issue Date

VERTICAL CONTROL:
HORIZONTAL CONTROL:

SHEET TITLE: FIRE ALARM PLANS - BATHHOUSE AND POOL EQ. BLDG

PROJECT: GRANADA HILLS POOL AND BATHOUSE REPLACEMENT PROJECT

ADDRESS: 16730 CHATSWORTH STREET GRANADA HILLS, CA 91344

BID SET
PROJECT DATE ISSUE : 06/22/21

REGISTERED PROFESSIONAL ENGINEER
FELIX ROTH
No. 012941
Exp. 3-31-21
ELECTRICAL
STATE OF CALIFORNIA

SILVER,ROTH & ASSOCIATES INC.
CONSULTING ELECTRICAL ENGINEERS
5 1 1 SOUTH FAIRFAX AVENUE
LOS ANGELES, CALIFORNIA 90036-3100
TEL: (323) 933-3700 / FAX: (323) 933-3874
EMAIL: sra@silverroth.com

WORK ORDER NO.
#E170517

PLAN FILE NO.

DRAWING NO.
FA2.1
SHEET OF SHEETS

PLOTTED:4/15/2020 11:01:53 AM

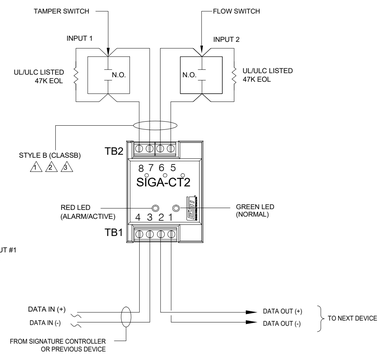

NOTES:

1. MAXIMUM 25 Ohm RESISTANCE PER WIRE.
2. MAXIMUM #12AWG WIRE; MINIMUM #18 AWG WIRE.
3. MAXIMUM 10Vdc AT 350 A. μ
4. FOR EASE OF PROGRAMMING ALWAYS CONNECT INPUT #1 TO TAMPER SWITCH AND INPUT #2 TO FLOW SWITCH.

TYPICAL FLOW AND TAMPER SWITCH MONITORING VIA SIGA-CT2 DETAIL

SCALE: NTS

5 -

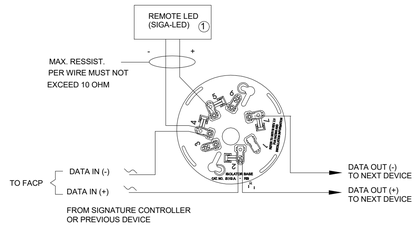

NOTE:

1 WHERE REQUIRED

SMOKE DETECTOR BASE (SIGA-SB) WIRING DETAIL

SCALE: NTS

4 -

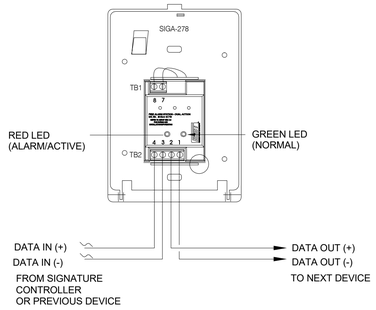

TYPICAL MANUAL PULL STATION WIRING DETAIL

SCALE: NTS

1 -

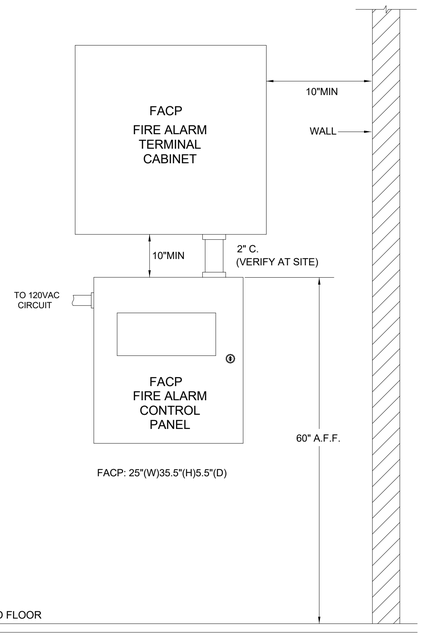

FIRE ALARM PANEL/FIRE ALARM TERMINAL CABINET MOUNTING ELEVATION DETAIL

SCALE: NTS

3 -

NOTES: 1. MOUNTING HEIGHT FOR EXTERIOR HORN SHALL BE 90"(MIN), MEASURED FROM TOP OF DEVICE

ELEVATION MOUNTING DETAIL / MANUAL PULL STAION AUDIO-VISUAL/SMOKE/HEAT DETECTOR

SCALE: NTS

2 -

BUREAU OF ENGINEERING
OFFICIAL RECORD

FELIX ROTH
No. 012941
Exp. 3-31-21
ELECTRICAL
STATE OF CALIFORNIA

SILVER,ROTH & ASSOCIATES INC.
CONSULTING ELECTRICAL ENGINEERS
511 SOUTH FAIRFAX AVENUE
LOS ANGELES, CALIFORNIA, 90036-3130
TEL: (323) 933-3700 / FAX: (323) 933-3874
EMAIL: sra@silverroth.com

THE CITY OF LOS ANGELES OR ITS OFFICERS OR AGENTS SHALL NOT BE RESPONSIBLE FOR THE ACCURACY OR COMPLETENESS OF ELECTRONIC COPIES OF THIS PLAN SHEET.

TTLB TEMPLATE REVISION DATE: 02/2013
SHEET ISSUE DATE: 02/25/19
FILE PATH: C:\Users\dcard\Documents\E_Granada-Hills_2017_SilverRoth.rvt

REVISION DATES (DESIGN STAGE ONLY)

BUREAU OF ENGINEERING
REVISION DESCRIPTION | NO. | DATE | BY
BUILDING NO. -
INDEX NO. RP-300118

BUREAU OF ENGINEERING
CITY OF LOS ANGELES

DEPARTMENT OF PUBLIC WORKS
CITY OF LOS ANGELES

GARY LEE MOORE, PE, ENV SP
CITY ENGINEER
DATE:

ARCHITECT/ENGINEER: Silver Roth & Assoc. LIC. NO.: 012941
ARCHITECTURAL DIVISION
DESIGNED BY: Felix Roth
DRAWN BY: Felix Roth
CHECKED BY: Felix Roth
APPROVED BY: Approver

Issue Date
Issue Date
Issue Date
Issue Date
Issue Date

VERTICAL CONTROL:
HORIZONTAL CONTROL:

SHEET TITLE: FIRE ALARM DETAILS

PROJECT: GRANDADA HILLS POOL AND BATHOUSE REPLACEMENT PROJECT

ADDRESS: 16730 CHATSWORTH STREET GRANADA HILLS, CA 91344

BID SET
PROJECT DATE ISSUE : 06/22/21

WORK ORDER NO.
#E170517

PLAN FILE NO.

DRAWING NO.
FA3.1
SHEET 0 OF SHEETS

PLOTTED:4/15/2020 11:01:53 AM

THE CITY OF LOS ANGELES OR ITS OFFICERS OR AGENTS SHALL NOT BE RESPONSIBLE FOR THE ACCURACY OR COMPLETENESS OF ELECTRONIC COPIES OF THIS PLAN SHEET.

TTLB TEMPLATE REVISION DATE: 02/2013
SHEET ISSUE DATE: 12/01/19
FILE PATH: BIM 360://Granada Hills Pool Renovation/A_Granada-Hills_2017.rvt

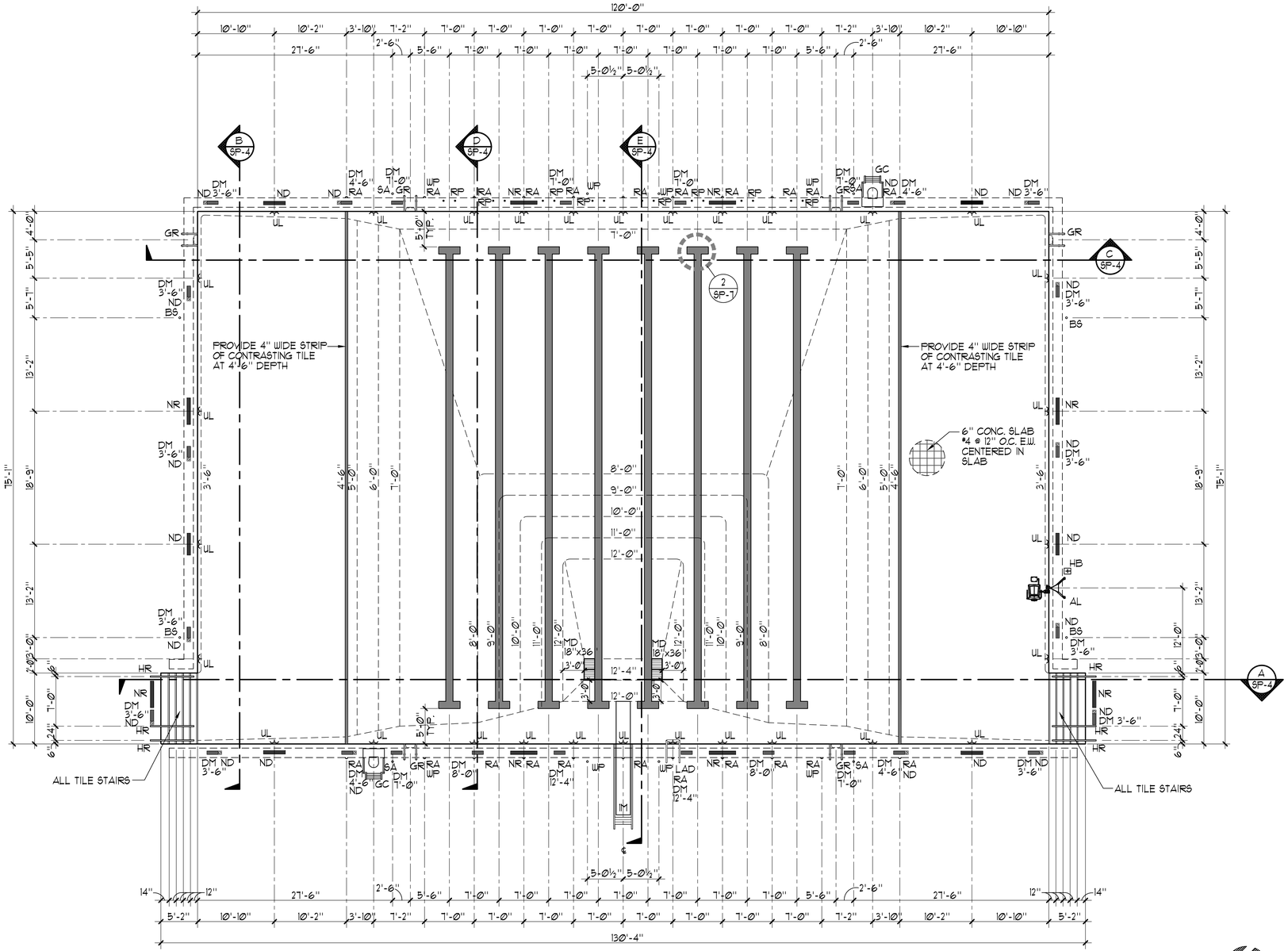

SWIMMING POOL DATA

SURFACE AREA	=	9,110 SQ. FT.
PERIMETER	=	410 FT.
DEPTH	=	3'-6" TO 12'-4"
VOLUME	=	449,366 GAL.
6 HR. TURNOVER	=	1250 GPM

LEGEND

MD	=	MAIN DRAIN — 1 / SP-10
GR	=	GRABRAIL — 1 / SP-9
DM	=	DEPTH MARKER — 4 / SP-7
NR	=	'NO RUNNING' — 6 / SP-7
ND	=	'NO DIVING' — 5 / SP-7, 6 / SP-7
RA	=	ROPE ANCHOR — 5 / SP-14
RP	=	RACING PLATFORM — 3 / SP-8
BS	=	BACKSTROKE STANCHION — 5 / SP-5
SA	=	STANCHION ANCHOR — 5 / SP-5
IM	=	ONE METER DIVE STAND — 3 / SP-9
UL	=	UNDERWATER LIGHT — 5 / SP-11
GC	=	GUARD CHAIR — 2 / SP-9
AL	=	ACCESSIBLE LIFT — 4 / SP-8
HR	=	HANDRAIL — 1 / SP-8
HB	=	HOSEBIB — 4 / SP-11
LAD	=	LADDER — 1 / SP-15
WP	=	WATER POLO GOALS (STATIONARY)

CERTIFICATION REQUIREMENTS

* THE CONTRACTOR SHALL RETAIN AN INDEPENDENT LICENSED SURVEYOR TO PROVIDE PROOF OF COMPLIANCE FOR REQUIRED POOL LENGTHS AS FOLLOWS: (RECOMMEND PATRELL ENG. GROUP (626) 335-4362)

  SHORT COURSE-25YDS: (ALLOWS FOR TOUCH PADS AT ONE END) 75'-0 5/16" MIN: 75'-1 3/16" MAX.

  TOLERANCE AGAINST LENGTH SHALL EXTEND IN A VERTICAL PLANE @.3M (12") ABOVE AND @.8M. (2'-1½") BELOW THE SURFACE OF THE WATER AT ALL POINTS OF BOTH END WALLS TYP. OF ALL COURSES.

  THE INDEPENDENT LICENSED SURVEYOR SHALL FILL OUT, NOTARIZE AND FILE OFFICIAL CERTIFICATION FORM(S) WITH USA SWIMMING.

BUREAU OF ENGINEERING
OFFICIAL RECORD

SWIMMING POOL LAYOUT PLAN

1 — 1/8" = 1'-0"

AQUATIC DESIGN GROUP
2226 Faraday Ave, Carlsbad, CA 92008
AquaticDesignGroup.com
760-438-2400

BUREAU OF ENGINEERING
ENGINEERING
CITY OF LOS ANGELES

NO.	REVISION DESCRIPTION	DATE	BY

BUILDING NO. -
INDEX NO. RP-300118

LICENSED ARCHITECT FOREST W. SIM C-26222 REN. 08/31/21 STATE OF CALIFORNIA

DEPARTMENT OF PUBLIC WORKS
CITY OF LOS ANGELES

CITY ENGINEER
GARY LEE MOORE, PE, ENV SP
ARCHITECTURAL DIVISION
LIC. NO. C-26222

		DATE:
ARCHITECT/ENGINEER:	SJF	12/01/2019
DESIGNED BY:	SJF	12/01/2019
DRAWN BY:	GSF	12/01/2019
CHECKED BY:	SJF	12/01/2019
APPROVED BY:	SJF	12/01/2019

VERTICAL CONTROL:
HORIZONTAL CONTROL:

SHEET TITLE: SWIMMING POOL LAYOUT PLAN

PROJECT: GRANADA HILLS POOL AND BATHHOUSE REPLACEMENT PROJECT

ADDRESS: 16730 CHATSWORTH STREET GRANADA HILLS, CA 91344

BID SET
PROJECT ISSUE DATE 06/22/21

WORK ORDER NO. #E170517
PLAN FILE NO.
DRAWING NO. SP-1
SHEET 1 OF SHEETS

PLOTTED: 6/26/2018 2:53:10 PM

REVISION DATES (DESIGN STAGE ONLY)

THE CITY OF LOS ANGELES OR ITS OFFICERS OR AGENTS SHALL NOT BE RESPONSIBLE FOR THE ACCURACY OR COMPLETENESS OF ELECTRONIC COPIES OF THIS PLAN SHEET.

FILE PATH: BIM 360://Granada Hills Pool Renovation/A_Granada-Hills_2017.rvt

SHEET ISSUE DATE: 12/01/19

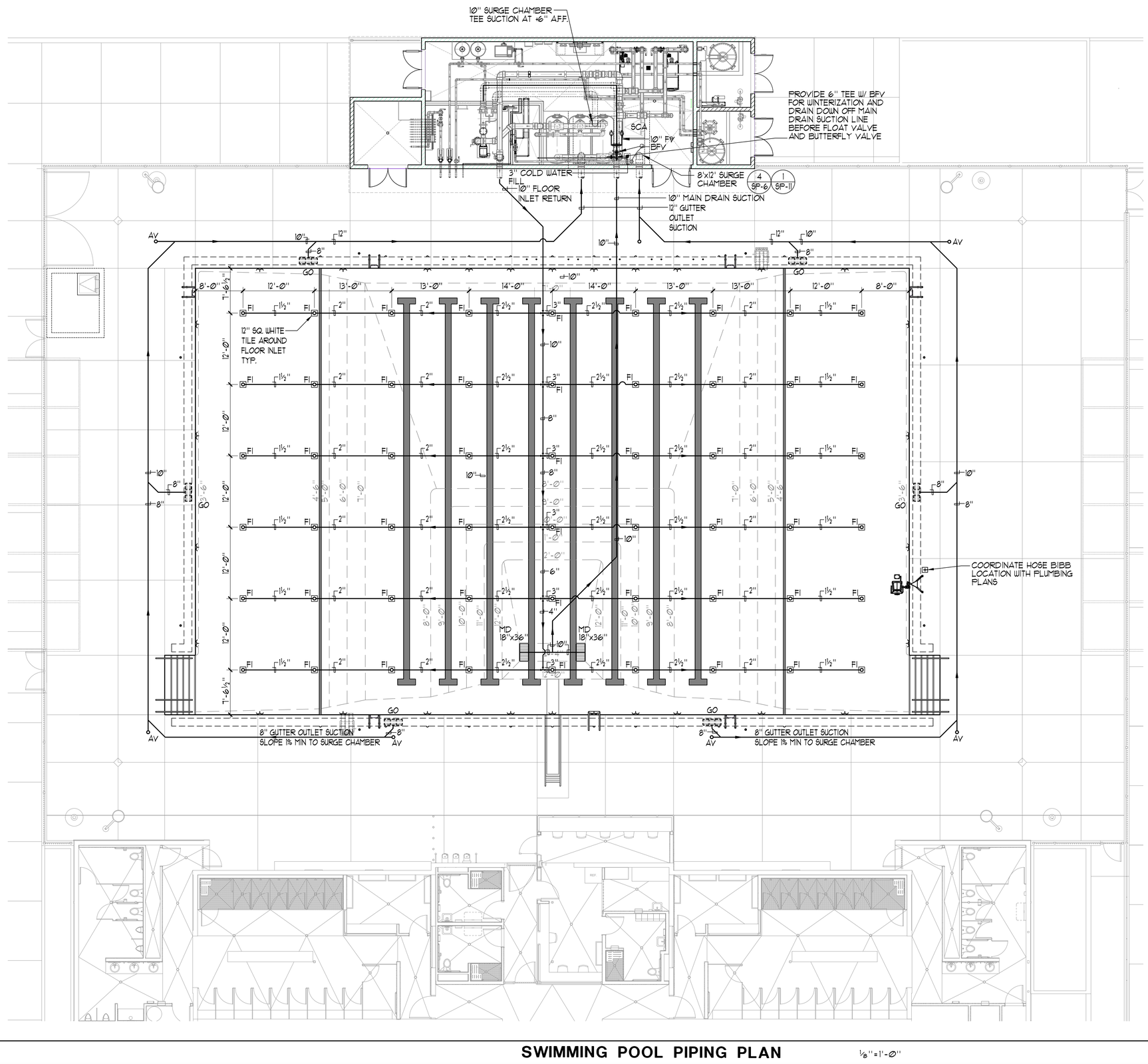

SWIMMING POOL DATA

SURFACE AREA	=	9,110 SQ. FT.
PERIMETER	=	410 FT.
DEPTH	=	3'-6" TO 12'-4"
VOLUME	=	449,966 GAL.
6 HR. TURNOVER	=	1,250 GPM

SURGE DATA

REQUIRED SURGE CAPACITY	=	9,110 GAL.
SURGE IN PERIMETER GUTTER	=	5,767 GAL.
8'x12' SURGE IN SURGE CHAMBER	=	3,595 GAL.
TOTAL SUPPLIED SURGE	=	9,362 GAL.

∴ 9,362 GAL. > 9,110 GAL. + 2% OK

LEGEND

MD	=	MAIN DRAIN — 1 / 5P-10
FI	=	FLOOR INLET — 3 / 5P-10
GO	=	GUTTER OUTLET — 4 / 5P-10
AV	=	AIR VENT — 2 / 5P-10
SCA	=	SURGE CHAMBER ACCESS — 2 / 5P-6
BFV	=	BUTTERFLY VALVE — 2 / 5P-11
FV	=	FLOAT VALVE
AFF.	=	ABOVE FINISHED FLOOR

NOTES:

1. PIPING ROUTES ARE SCHEMATIC IN NATURE AND SHOWN ON PLANS FOR CLARITY. CONTRACTOR SHALL ROUTE PIPING ACCORDINGLY TO MEET NOTED INVERT ELEVATIONS. REFER TO REFERENCED DETAIL FOR PIPE SPACING REQUIREMENTS. (3 / SP-11)
2. ALL POOL PIPING SHALL BE SCHEDULE 80 PVC.
3. COORDINATE ALL PIPING WITH SITE AND BUILDING UTILITIES INCLUDING PIPING, CONDUITS / STRUCTURES AND THE LIKE. COORDINATE ROUTING OF PIPING THROUGH STRUCTURAL SLAB. ALL PIPING SHALL HAVE UNIFORM SLOPE IN ONE DIRECTION.
4. SURGE CHAMBER TEE SUCTION SHALL BE SET AT 16" AFF. MAINTAIN MAXIMUM SEPARATION BETWEEN SUCTION AND INFLUENT PIPING WITHIN THE SURGE CHAMBER.
5. EACH MAIN DRAIN SHALL BE EQUIPPED WITH HYDROSTATIC RELIEF VALVE PER RECOMMENDATIONS OF GEOTECHNICAL REPORT

BUREAU OF ENGINEERING
OFFICIAL RECORD

NORTH

1 **SWIMMING POOL PIPING PLAN** 1/8"=1'-0"

AQUATIC DESIGN GROUP
2226 Faraday Ave, Carlsbad, CA 92008
AquaticDesignGroup.com
760.438.8400

ENGINEERING
CITY OF LOS ANGELES

BUILDING NO. -
INDEX NO. RP-300118

NO. | REVISION DESCRIPTION | DATE | BY

LICENSED ARCHITECT * GARY L. MOORE * REGISTERED PROFESSIONAL ENGINEER * C-26222 REN. 12-31-21 * STATE OF CALIFORNIA

DEPARTMENT OF PUBLIC WORKS
BUREAU OF ENGINEERING

CITY ENGINEER: DATE: 12/01/2019
GARY LEE MOORE, PE, ENV SP — LIC. NO.: C-26222
ARCHITECTURAL DIVISION
ARCHITECT/ENGINEER: SJF — 12/01/2019
DESIGNED BY: SJF — 12/01/2019
DRAWN BY: GSF — 12/01/2019
CHECKED BY: SJF — 12/01/2019
APPROVED BY: SJF — 12/01/2019

CITY OF LOS ANGELES
VERTICAL CONTROL:
HORIZONTAL CONTROL:
SHEET TITLE: SWIMMING POOL PIPING PLAN
PROJECT: GRANADA HILLS POOL AND BATHHOUSE REPLACEMENT PROJECT
ADDRESS: 16730 CHATSWORTH STREET GRANADA HILLS, CA 91344

BID SET
PROJECT ISSUE DATE: 06/22/21

WORK ORDER NO. #E170517
PLAN FILE NO.
DRAWING NO. SP-2
SHEET 0 OF SHEETS

REVISION DATES (DESIGN STAGE ONLY)

SWIMMING POOL DATA

SURFACE AREA	=	9,110 SQ. FT.
PERIMETER	=	410 FT.
DEPTH	=	3'-6" TO 12'-6"
VOLUME	=	449,966 GAL.
6 HR. TURNOVER	=	1250 GPM

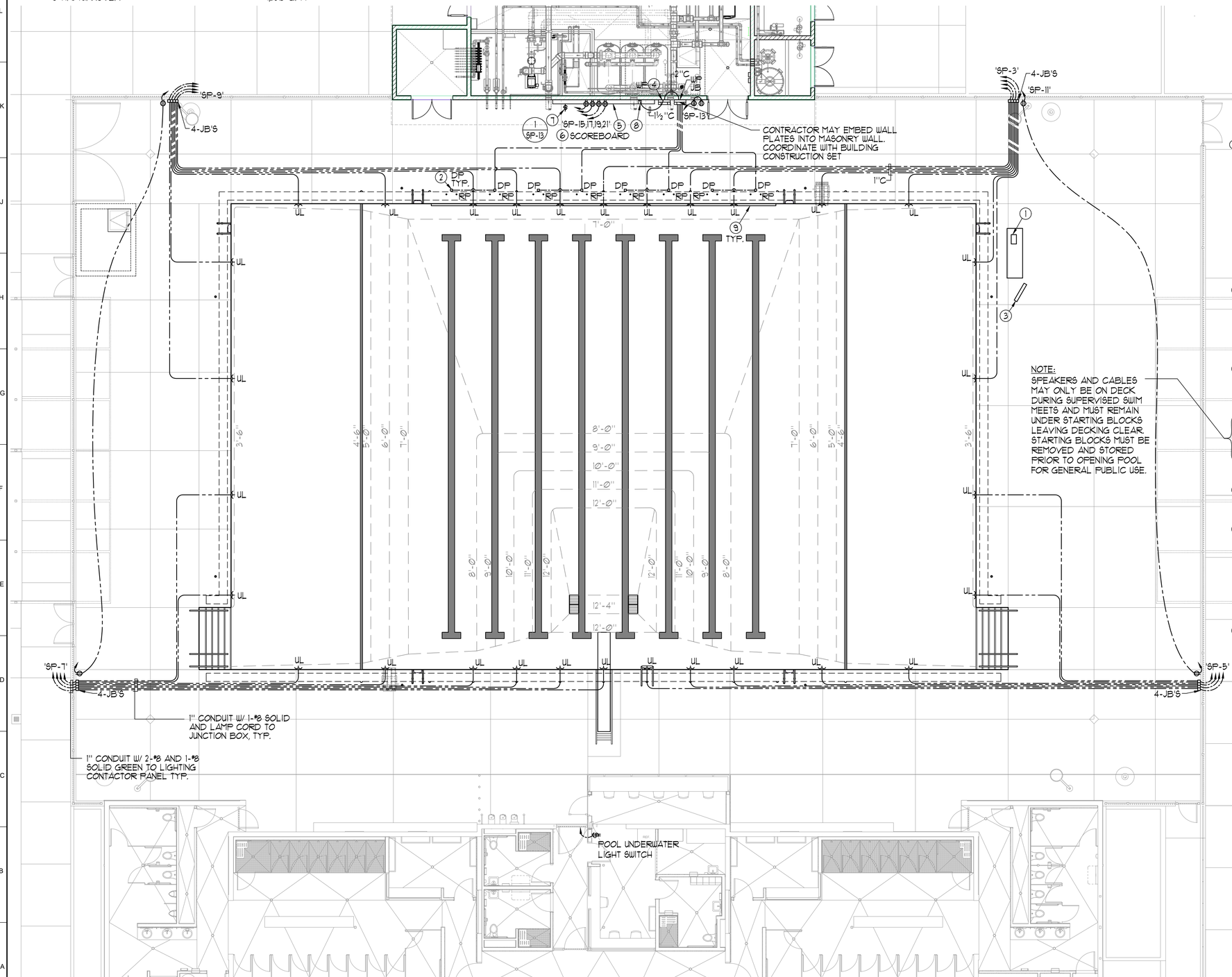

LEGEND

UL	=	UNDERWATER LIGHT — 5 / SP-11
JB	=	JUNCTION BOX — 5 / SP-12
RP	=	RACING PLATFORM — 3 / SP-8
WP	=	WALL PLATE — 2 / SP-12
DP	=	DECK PLATE — 3 / SP-12
WP JB	=	WALL PLATE JUNCTION BOX SIM. — 2 / SP-12

NOTE:
REFER TO ELECTRICAL PLANS FOR LOCATION OF OWNER COORDINATED REMOTE UNDERWATER LIGHT SWITCH.

TIMING SYSTEM NOTES/EQUIPMENT

NOTE: THE CONTRACTOR SHALL SUPPLY AND INSTALL DECK PLATE BOXES, WALL PLATE BOXES, WALL PLATE JUNCTION BOXES, CONDUIT, WIRING, SCOREBOARD AND ALL TIMING EQUIPMENT AS SHOWN FOR THE 'COLORADO' TIME SYSTEM OR EQUAL.

TIMING SYSTEM

QTY	MODEL	DESCRIPTION
① 1	SPORTS TIMER	MULTI-SPORT TIMING/SCORING CONSOLE HARDWARE: MULTI-SPORT AQUATICS TIMING AND SCORING CONSOLE WITH CARRYING CASE. SPORT INSERTS TO INCLUDE SWIMMING, DIVING, WATER POLO AND PACE CLOCK SYSTEM TO INCLUDE 15" FULL LCD DISPLAY, CD-RW DRIVE, UNLIMITED RACE/MEET STORAGE, EXTERNAL MOUSE AND KEYBOARD PORT AND BACKUP RECHARGEABLE SYSTEM.
		SOFTWARE: SWIMMING, DIVING, WATER POLO AND PACE CLOCK SOFTWARE SHALL BE PROVIDED. SWIMMING SOFTWARE SHALL BE CAPABLE OF STORED LAP AND CUMULATIVE SPLITS. SPLIT INFORMATION SHALL BE POSTED TO SCOREBOARD IN LAP OR CUMULATIVE FORMAT. SOFTWARE SHALL BE CAPABLE OF TIMING UP TO 10 LANES OF COMPETITION MEARE AND FAR END. SOFTWARE SHALL HAVE TIMING CAPABILITY OF ONE TOUCHPAD WITH UP TO THREE BUTTON BACKUP AND RELAY TAKE-OFF PLATFORM. SWIMMING SOFTWARE SHALL OPERATE IN A POINT AND CLICK WINDOWS® ENVIRONMENT.
1	CABLE HARNESS	EIGHT-LANE ABOVE DECK TIMING HARNESS INCLUDES A EIGHT-LANE CABLE HARNESS AND ONE PUSHBUTTON PER LANE.
⑨ 8	TP-TBG	18"x22" TOUCHPAD, TOUCHPAD SHALL BE CONSTRUCTED OF STAINLESS STEEL TO PREVENT THE POSSIBILITY OF WARPING IN EXTREME HEAT.

TOUCHPAD CADDY

QTY	MODEL	DESCRIPTION
1	CART	TOUCHPAD CADDY FOR GUTTERHUNG TOUCHPADS. HOLDS UP TO TEN TOUCHPADS. SHALL ARRIVE ON SITE FULLY ASSEMBLED.

START SYSTEM

QTY	MODEL	DESCRIPTION
③ 1	HORN START	ELECTRONIC START SYSTEM WITH WIRELESS MICROPHONE, WIRED MICROPHONE, VOLUME CONTROLS FOR AUXILIARY SPEAKERS. 4 INDIVIDUAL LANE SPEAKERS, BUILT-IN EXTERNAL 360-DEGREE STROBE LIGHT WITH CAPABILITY TO ADD REMOTE EXTERNAL STROBE, AC POWER CAPABILITY FOR MEET OPERATION IN THE EVENT THE BATTERY SYSTEM FAILS, LED BATTERY LEVEL INDICATION LIGHT, ABILITY TO DISABLE RECALL FUNCTION.
8	LANE SPEAKER	INDIVIDUAL 6 WATT LANE SPEAKER FOR START SYSTEM
1	AUX. SPEAKER	40 WATT SPEAKER WITH 100' OF CABLE
1	BRACKET	BACKSTROKE FLAGPOLE MOUNTING BRACKET FOR START SYSTEM.
1	CABLE	THIRTY FOOT JUMPER CABLE

IN-DECK

QTY	MODEL	DESCRIPTION
② 8	LANE DECK PLATE	INDIVIDUAL LANE TITANIUM DECK PLATE. PLATE SHALL HAVE CONNECTIONS FOR (1) TOUCHPAD, (3) BACKUP BUTTON TIMING, RELAY TAKE-OFF PLATFORM AND INDIVIDUAL LANE SPEAKER. PLATES SHALL BE MOUNTED PERMANENTLY TO THE DECK ON 4"x4"x6" PVC JUNCTION BOXES (CARLON E989NNR).
④ 1	WALL PLATE	WALL PLATE, TIMING: WALL PLATE: 12"x12"x6" WALL BOX IN CONC. PEDESTAL, ONE (1) TOTAL. WALL BOX WITH WALL PLATE JUNCTION BOX 12"x12"x6" ONE (1) TOTAL.

WATER POLO

QTY	MODEL	DESCRIPTION
1	WATER POLO	WATER POLO PACKAGE TO INCLUDE HAND-HELD GAME CLOCK START/STOP/HORN SWITCH, HAND-HELD SHOT CLOCK START/STOP/RESET SWITCH AND ABOVE DECK SHOT CLOCK DATA CABLES

SCOREBOARD

QTY	MODEL	DESCRIPTION
⑤ 1	SCOREBOARD (1 / SP-13)	EIGHT-LINE OUTDOOR LED SCOREBOARD: EACH MODULE INCLUDES: EIGHT, 10-INCH LED DIGITS. (CHOICE OF RED OR AMBER DIGITS) BEAM MOUNTING HARDWARE
		SCOREBOARD FUNCTIONS: DISPLAY LANE, PLACE, AND TIME FOR LANES 1-6 ONE LINE TO DISPLAY HOME/GUEST SCORES ONE LINE TO DISPLAY LENGTHS/ RECORD TIME
		⑥ FOUR (4) DEDICATED 20 AMP CIRCUIT TO BE TERMINATED INTO SCOREBOARD LOAD CENTER
		⑦ MASTER ON/OFF SCOREBOARD SWITCH WITH PILOT LIGHT, W/ LOCKABLE ENCLOSURE.
		⑧ SCOREBOARD DATA CONNECTION BOX CONNECT TO TIMING/WALL BOX LOCATION W/ 1½" PVC CONDUIT.
1	ID PANEL	NON-ILLUMINATED FACILITY IDENTIFICATION PANEL WITH ARTWORK.

PACE CLOCK/WATER POLO SHOT CLOCK/REACTION TIMER

QTY	MODEL	DESCRIPTION
2	TIMER	MULTI-USE OUTDOOR TIMER WITH 7" OUTDOOR LED DIGITS
		PACE CLOCK FUNCTIONS: MULTI-SPORT TIMING/SCORING CONSOLE CAPABLE OF DOWNLOADING WORKOUTS FROM HY-TEK WORKOUT MANAGER. UNIT CAPABLE OF OPERATING AS A STAND-ALONE PACE CLOCK. FUNCTIONS INCLUDE COUNT UP, WORKOUT PROGRAM, TIME OF DAY.
		WATER POLO SHOT CLOCK FUNCTIONS: OPERATES IN CONJUNCTION WITH MULTI-SPORT TIMING/SCORING CONSOLE TO ACT AS A PORTABLE BATTERY-OPERATED WATER POLO SHOT CLOCK. CAN ALSO ACT AS STAND-ALONE SHOT CLOCK OPERATED BY SWITCHES ON THE SIDE OF THE UNIT.
		REACTION TIMER FUNCTIONS: OPTIMIZES START REACTION TIMES AND PERFECTS RELAY EXCHANGES WHEN USED IN CONJUNCTION WITH TOUCHPAD AND/OR RELAY JUDGING PLATFORM
RJP		RELAY JUDGING PLATFORM TO BE USED IN CONJUNCTION WITH MULTI-USE OUTDOOR TIMER

AQUATIC DESIGN GROUP
2228 Faraday Ave, Carlsbad, CA 92008
AquaticDesignGroup.com
760-438-2400

ENGINEERING — CITY OF LOS ANGELES

BUREAU OF ENGINEERING — DEPARTMENT OF PUBLIC WORKS

NO.	REVISION DESCRIPTION	DATE	BY

BUILDING NO. -

INDEX NO. RP-300118

LICENSED ARCHITECT — ROBERT SILVA — CA 26222 — REN 08/31/21 — STATE OF CALIFORNIA

CITY ENGINEER

	DATE:
	12/01/2019
	12/01/2019
	12/01/2019
	12/01/2019
	12/01/2019

GARY LEE MOORE, PE, ENV SP — LIC. NO.: C-26222

ARCHITECT/ENGINEER: SJF
DESIGNED BY: SJF
DRAWN BY: GSF
CHECKED BY: SJF
APPROVED BY: SJF

ARCHITECTURAL DIVISION

VERTICAL CONTROL:
HORIZONTAL CONTROL:

SHEET TITLE: SWIMMING POOL UNDERWATER LIGHT / TIMING SYSTEM PLAN

PROJECT: GRANADA HILLS POOL AND BATHHOUSE REPLACEMENT PROJECT

ADDRESS: 16730 CHATSWORTH STREET GRANADA HILLS, CA 91344

BID SET
PROJECT ISSUE DATE: 06/22/21

WORK ORDER NO. #E170517

PLAN FILE NO.

DRAWING NO. SP-3

SHEET O F SHEETS

BUREAU OF ENGINEERING — OFFICIAL RECORD

PLOTTED: 6/26/2018 2:53:10 PM

1 SWIMMING POOL UNDERWATER LIGHT / TIMING SYSTEM PLAN 1/8"=1'-0"

THE CITY OF LOS ANGELES OR ITS OFFICERS OR AGENTS SHALL NOT BE RESPONSIBLE FOR THE ACCURACY OR COMPLETENESS OF ELECTRONIC COPIES OF THIS PLAN SHEET.

REVISION DATES (DESIGN STAGE ONLY)

TTLB TEMPLATE REVISION DATE: 02/2013
SHEET ISSUE DATE: 12/01/19
FILE PATH: BIM 360://Granada Hills Pool Renovation/A_Granada-Hills_2017.rvt

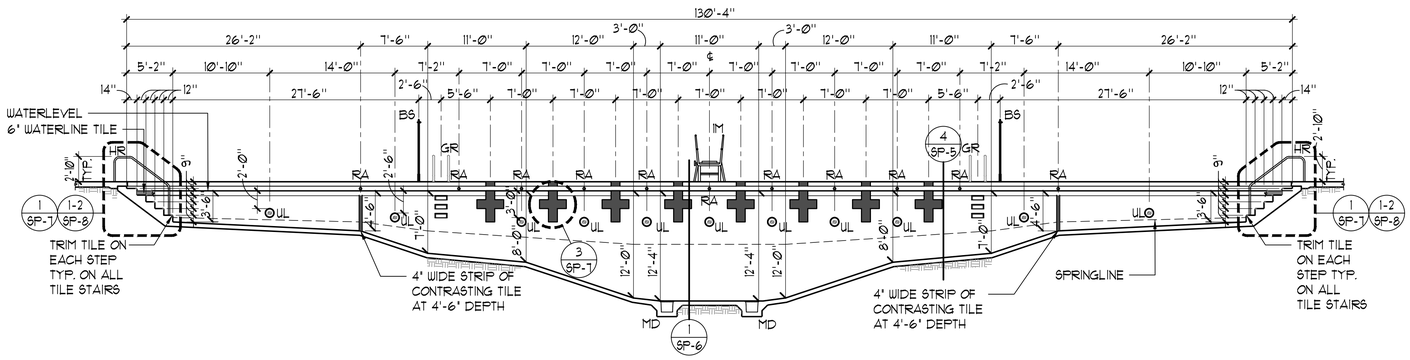

NOTE:
SHOTCRETE STRUCTURE SHALL BE FINISHED WITH SMOOTH TROWEL FINISH AND PAINTED WITH WHITE EPOXY PAINT PER SPECIFICATIONS. ALL TILE ELEMENTS SHALL BE RECESSED ¾" AND FINISHED FLUSH WITH PAINTED SURFACE

A SWIMMING POOL SECTION

1/8"=1'-0"

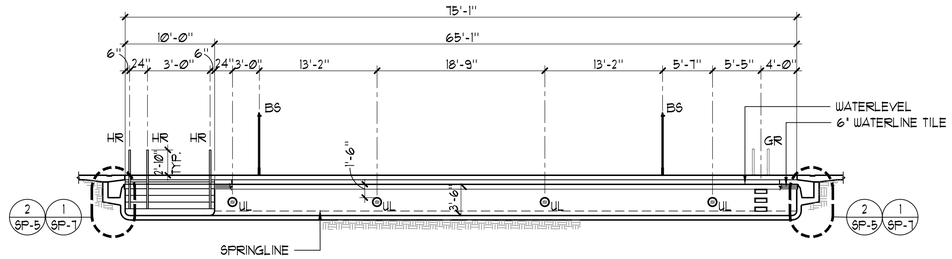

NOTE:
SHOTCRETE STRUCTURE SHALL BE FINISHED WITH SMOOTH TROWEL FINISH AND PAINTED WITH WHITE EPOXY PAINT PER SPECIFICATIONS. ALL TILE ELEMENTS SHALL BE RECESSED ¾" AND FINISHED FLUSH WITH PAINTED SURFACE

B SWIMMING POOL SECTION

1/8"=1'-0"

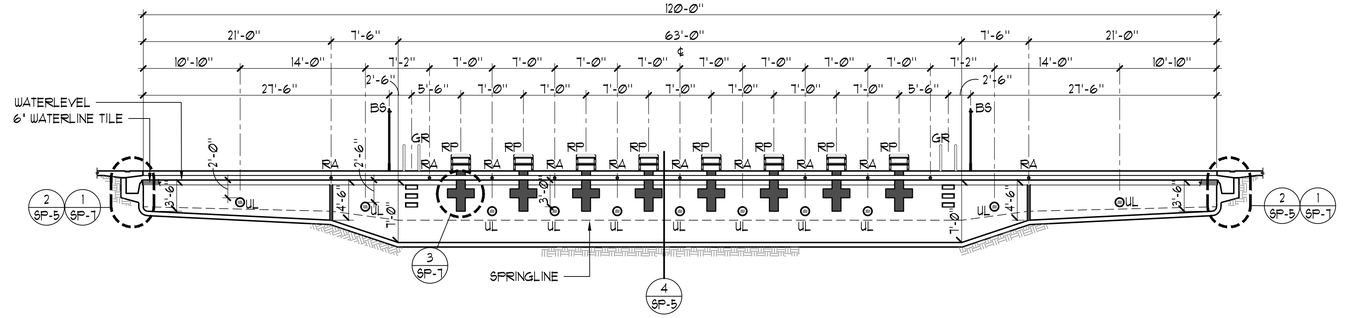

NOTE:
SHOTCRETE STRUCTURE SHALL BE FINISHED WITH SMOOTH TROWEL FINISH AND PAINTED WITH WHITE EPOXY PAINT PER SPECIFICATIONS. ALL TILE ELEMENTS SHALL BE RECESSED ¾" AND FINISHED FLUSH WITH PAINTED SURFACE

BUREAU OF ENGINEERING
OFFICIAL RECORD

C SWIMMING POOL SECTION

1/8"=1'-0"

NOTE:
SHOTCRETE STRUCTURE SHALL BE FINISHED WITH SMOOTH TROWEL FINISH AND PAINTED WITH WHITE EPOXY PAINT PER SPECIFICATIONS. ALL TILE ELEMENTS SHALL BE RECESSED ¾" AND FINISHED FLUSH WITH PAINTED SURFACE

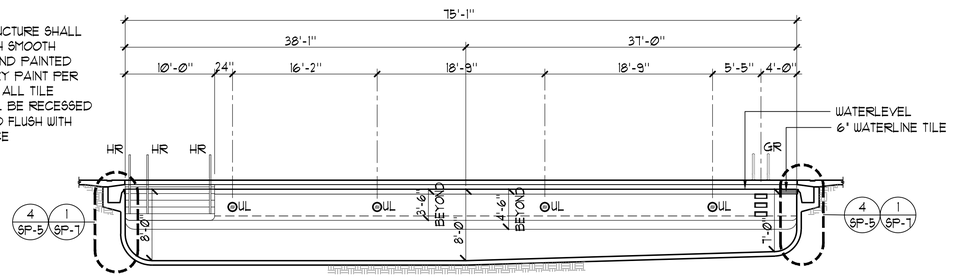

D SWIMMING POOL SECTION

1/8"=1'-0"

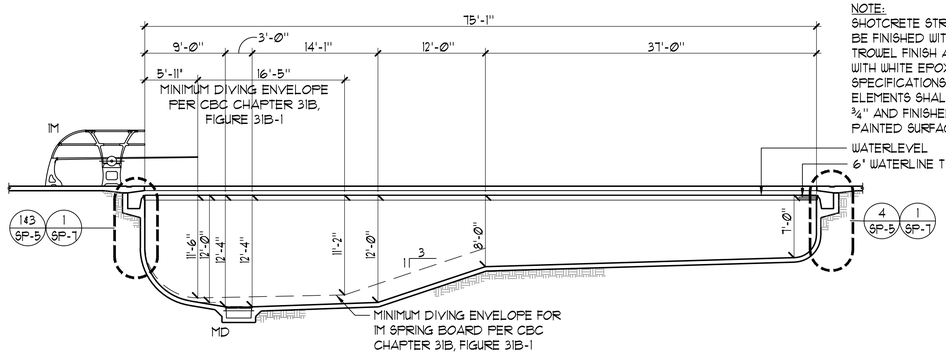

NOTE:
SHOTCRETE STRUCTURE SHALL BE FINISHED WITH SMOOTH TROWEL FINISH AND PAINTED WITH WHITE EPOXY PAINT PER SPECIFICATIONS. ALL TILE ELEMENTS SHALL BE RECESSED ¾" AND FINISHED FLUSH WITH PAINTED SURFACE

E SWIMMING POOL SECTION

1/8"=1'-0"

AQUATIC DESIGN GROUP
2228 Faraday Ave, Carlsbad, CA 92008
AquaticDesignGroup.com
760-438-2400

ENGINEERING
CITY OF LOS ANGELES

BUREAU OF ENGINEERING

NO.	REVISION DESCRIPTION	DATE	BY

BUILDING NO. -

INDEX NO. RP-300118

LICENSED ARCHITECT FOREIGN STATE OF CALIFORNIA C-26222 REN 08/31/21

DEPARTMENT OF PUBLIC WORKS

CITY OF LOS ANGELES

GARY LEE MOORE, PE, ENV SP
CITY ENGINEER

		DATE:
ARCHITECT/ENGINEER:	SJF	12/01/2019
ARCHITECTURAL DIVISION	LIC. NO. C-26222	12/01/2019
DESIGNED BY:	SJF	12/01/2019
DRAWN BY:	GSF	12/01/2019
CHECKED BY:	SJF	12/01/2019
APPROVED BY:	SJF	12/01/2019

VERTICAL CONTROL:
HORIZONTAL CONTROL:

SHEET TITLE: SWIMMING POOL SECTIONS

PROJECT: GRANADA HILLS POOL AND BATHHOUSE REPLACEMENT PROJECT

ADDRESS: 16730 CHATSWORTH STREET GRANADA HILLS, CA 91344

BID SET
PROJECT ISSUE DATE:06/22/21

WORK ORDER NO. #E170517

PLAN FILE NO.

DRAWING NO. SP-4

SHEET OF SHEETS

PLOTTED:6/26/2018 2:53:10 PM

THE CITY OF LOS ANGELES OR ITS OFFICERS OR AGENTS SHALL NOT BE RESPONSIBLE FOR THE ACCURACY OR COMPLETENESS OF ELECTRONIC COPIES OF THIS PLAN SHEET.

TTLB TEMPLATE REVISION DATE: 02/2013
SHEET ISSUE DATE: 12/01/19
FILE PATH: BIM 360://Granada Hills Pool Renovation/A_Granada-Hills_2017.rvt

REVISION DATES (DESIGN STAGE ONLY)

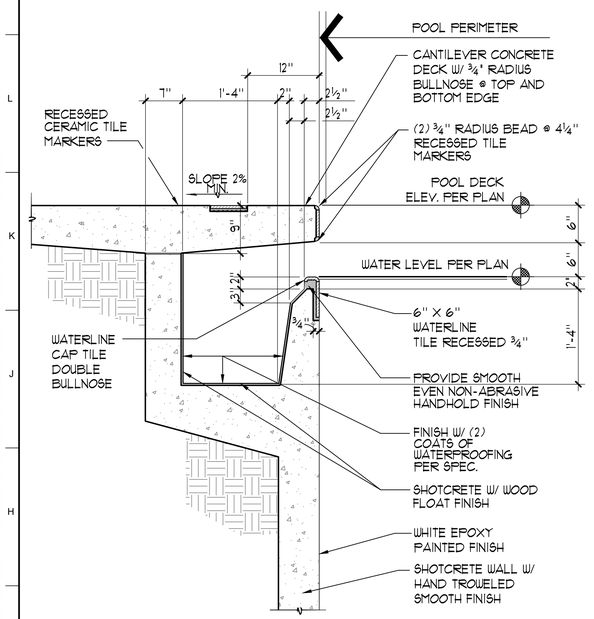

1 **TYPICAL GUTTER DETAIL** 1"=1'-Ø"

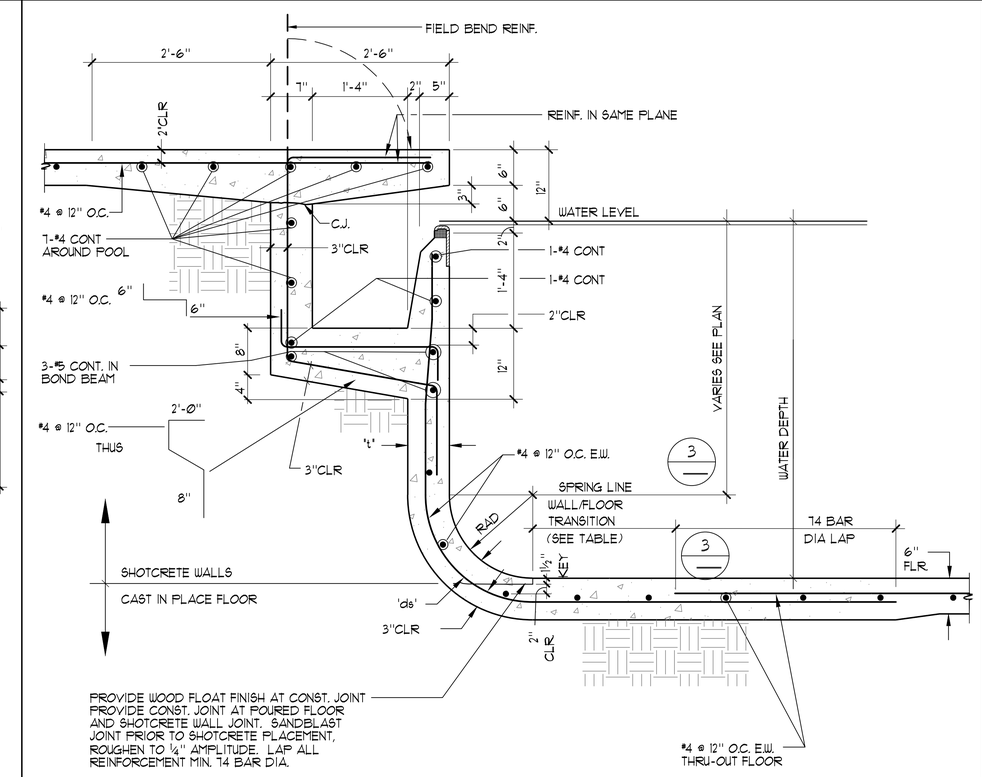

2 **POOL WALL 3'-6" TO 5'-0"** 1"=1'-Ø"

REINFORCEMENT TABLE						
WATER DEPTH	't'	'ds'	RADIUS	VERTICAL REINF.	HORIZONTAL REINF.	TRANSITION TO FLOOR REINF. BEYOND END RADIUS
3'-6"	6"	3"	6"	#4 @ 12" O.C.	#4 @ 12" O.C.	24"
3'-7" TO 5'-Ø"	7"	4"	6" TO 18"	#4 @ 12" O.C.	#4 @ 12" O.C.	24"
5'-1" TO 7'-Ø"	9"	6"	18" TO 2'-6"	#4 @ 6" O.C.	#4 @ 8" O.C.	24"
7'-1" TO 10'-Ø"	10"	7"	2'-6" TO 5'-Ø"	#5 @ 4" O.C.	#4 @ 8" O.C.	24"
10'-1" TO 12'-4"	14"	11"	5'-Ø" TO 6'-Ø"	#5 @ 4" O.C. REAR FACE #4 @ 12" O.C. FRONT FACE	#4 @ 4" O.C. REAR FACE #4 @ 12" O.C. FRONT FACE	24"

3 **REINFORCEMENT TABLE**

CONCRETE NOTES:

1. THE MINIMUM ULTIMATE COMPRESSIVE STRENGTH AT 28 DAYS
   POOL = 4,000 PSI
   SLAB-ON-GRADE = 4,000 PSI WITH WATER / CEMENT RATIO OF Ø.55
2. CONTINUOUS INSPECTION BY AN APPROVED INSPECTOR IS REQUIRED OF ALL CONCRETE PLACEMENT.
3. ALL CEMENT USED SHALL CONFORM TO A.S.T.M. C-150 TYPE II.
4. FINE AND COARSE AGGREGATE SHALL CONFORM TO A.S.T.M. C-33. MAXIMUM SIZE OF AGGREGATE TO BE 1".
5. CONCRETE MIX DESIGNS SHALL BE BASED UPON CBC SECTION 1904A2.
6. CONCRETE SHALL BE TESTED AND INSPECTED PER SECTION CBC 1705A.3 AND 1913A.1.
7. REMOVAL OF FORMS SHALL COMPLY WITH ACI-14, 26.11.
8. ALL REINFORCING SHALL BE ASTM A-615, GRADE 60, UNLESS OTHERWISE NOTED. LAPS SHALL BE T4 BAR DIA.

SHOTCRETE NOTES:

1. THE MINIMUM ULTIMATE COMPRESSIVE STRENGTH AT 28 DAYS POOL WALLS = 4,000 PSI.
2. CONTINUOUS INSPECTION BY AN APPROVED INSPECTOR IS REQUIRED OF ALL SHOTCRETE PLACEMENT.
3. ALL CEMENT USED SHALL CONFORM TO A.S.T.M. C-150 TYPE II.
4. FINE AND COARSE AGGREGATE SHALL CONFORM TO A.S.T.M. C-33. MAXIMUM SIZE OF AGGREGATE TO BE ⅜".
5. SHOTCRETE MIX DESIGNS SHALL BE PER CBC SECTION 1908A.2.
6. SHOTCRETE SHALL BE TESTED AND INSPECTED PER SECTIONS 1705A.3 AND 1908A.5.
7. ANCHOR BOLTS, ANCHORS, DOWELS, INSERTS, ETC. SHALL BE SECURELY TIED IN PLACE PRIOR TO PLACING OF SHOTCRETE.
8. ALL REINFORCEMENT WITHIN SHOTCRETE SHALL MAINTAIN MINIMUM 2" CLEAR NON-CONTACT SPLICES.
9. THE FILM OF LAITANCE WHICH FORMS ON THE SURFACE OF THE SHOTCRETE SHALL BE REMOVED WITHIN APPROXIMATELY TWO HOURS AFTER APPLICATION BY BRUSHING WITH A STIFF BROOM. IF THIS IS NOT REMOVED WITHIN TWO HOURS, IT SHALL BE REMOVED BY THOROUGH WIRE BRUSHING OR SAND BLASTING. CONSTRUCTION JOINTS OVER EIGHT HOURS OLD SHALL BE THOROUGHLY CLEANED WITH AIR AND WATER PRIOR TO RECEIVING SHOTCRETE.
10. ALL REINFORCING SHALL BE ASTM A-615, GRADE 60, UNLESS OTHERWISE NOTED. LAPS SHALL BE T4 BAR DIA.
11. ALL SHOTCRETE SHALL BE FINISHED WITH SMOOTH TROWELED FINISH SURFACE AND PREPARED TO RECEIVE WHITE EPOXY PAINT. ALL TILE TO BE RECESSED ¾" AND FINISHED FLUSH WITH SHOTCRETE SURFACE.

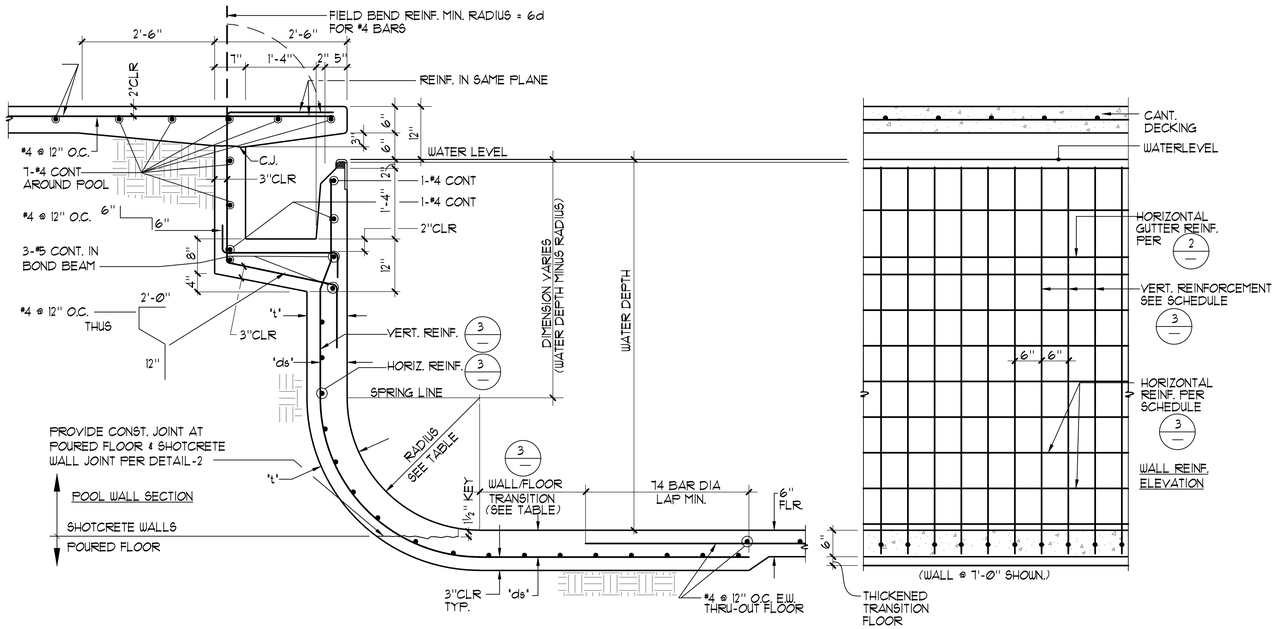

4 **POOL WALL 5'-1" TO 10'-0"** ¾"=1'-Ø"

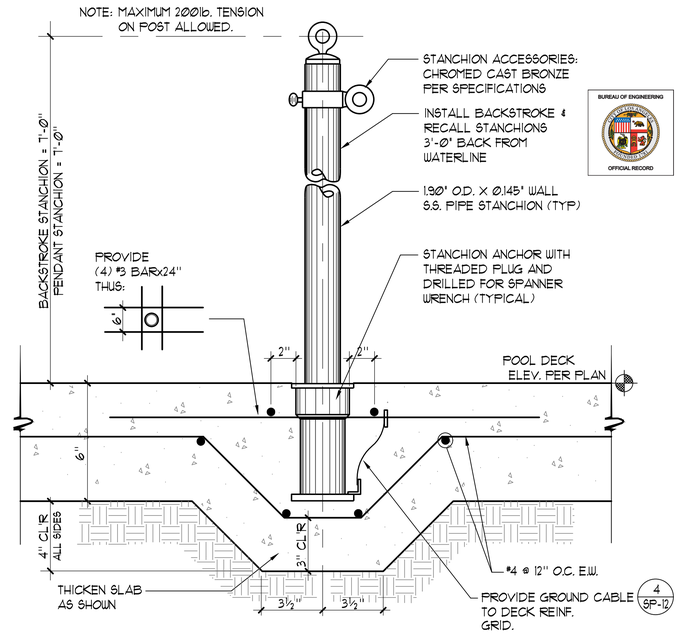

5 **STANCHION POST/ANCHOR** 3"=1'-Ø"

AQUATIC DESIGN GROUP
2226 Faraday Ave, Carlsbad, CA 92008
AquaticDesignGroup.com
760.438.8430

CITY OF LOS ANGELES
DEPARTMENT OF PUBLIC WORKS
BUREAU OF ENGINEERING

NO.	REVISION DESCRIPTION	DATE	BY

BUILDING NO. -
INDEX NO. RP-300118

LICENSED ARCHITECT ROBERT J. FOREST C-26222 REN. 08/31/21 STATE OF CALIFORNIA

CITY OF LOS ANGELES
VERTICAL CONTROL:
HORIZONTAL CONTROL:
SHEET TITLE: DETAILS

CITY ENGINEER		DATE:
GARY LEE MOORE, PE, ENV SP		12/01/2019
ARCHITECTURAL DIVISION		12/01/2019
ARCHITECT/ENGINEER: SJF	LIC. NO.: C-26222	12/01/2019
DESIGNED BY: SJF		12/01/2019
DRAWN BY: GSF		12/01/2019
CHECKED BY: SJF		12/01/2019
APPROVED BY: SJF		12/01/2019

PROJECT: GRANADA HILLS POOL AND BATHHOUSE REPLACEMENT PROJECT
ADDRESS: 16730 CHATSWORTH STREET GRANADA HILLS, CA 91344

BID SET
PROJECT ISSUE DATE: 06/22/21

WORK ORDER NO. #E170517
PLAN FILE NO.
DRAWING NO. SP-5
SHEET O F SHEETS

PLOTTED: 6/25/2018 2:53:10 PM

THE CITY OF LOS ANGELES OR ITS OFFICERS OR AGENTS SHALL NOT BE RESPONSIBLE FOR THE ACCURACY OR COMPLETENESS OF ELECTRONIC COPIES OF THIS PLAN SHEET.

TTLB TEMPLATE REVISION DATE: 02/2013
SHEET ISSUE DATE: 12/01/19
FILE PATH: BIM 360://Granada Hills Pool Renovation/A_Granada-Hills_2017.rvt

REVISION DATES (DESIGN STAGE ONLY)

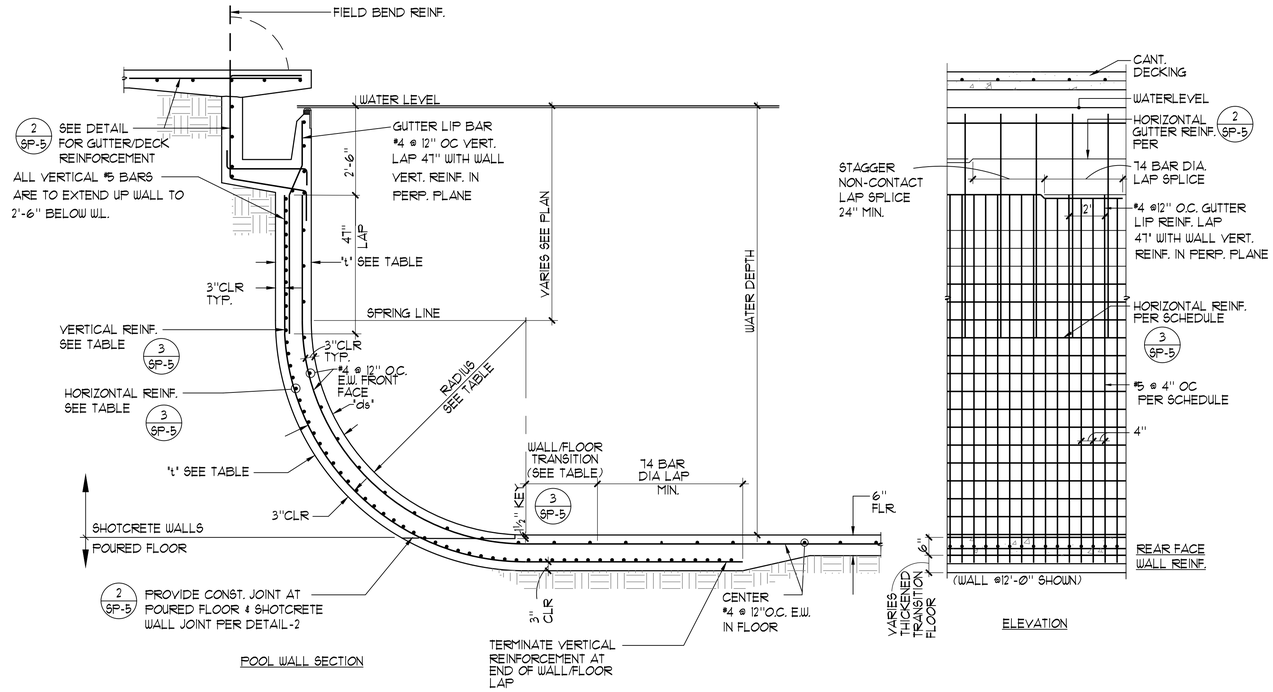

1 POOL WALL 10'-0" TO 12'-4"

½"=1'-0"

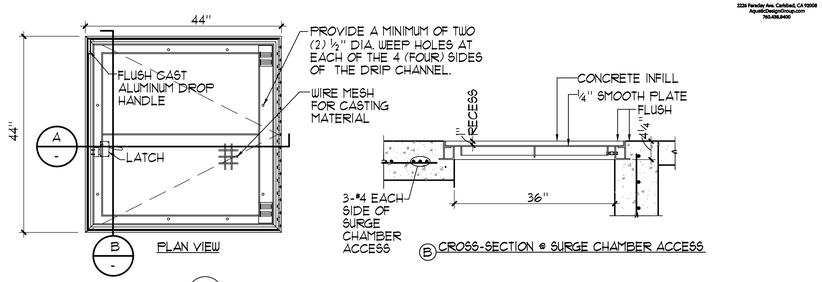

NOTES:

1. MATERIAL: ALUMINUM WITH STAINLESS STEEL BOLTS, NUTS, SPRINGS, SLAM LOCK, HINGES & HOLD OPEN ARM.
2. LOADING: 300 LBS. PER SQ. FOOT.
3. BITUMINOUS COATING IS APPLIED TO AREA OF FRAME IN CONTACT WITH CONCRETE.
4. HINGES TO BE LOCATED OPPOSITE LADDER RUNGS.

MANHOLE SHALL BE U.S.F. FABRICATION INC. RR-TFS-300-36x36 ALUMINUM. \(800)758-6873.

3 - 'LANE INTERNATIONAL CORPORATION' POLYPROPYLENE VAULT LADDER WITH PULL-UP HANDRAIL. COLOR TO BE BLACK.

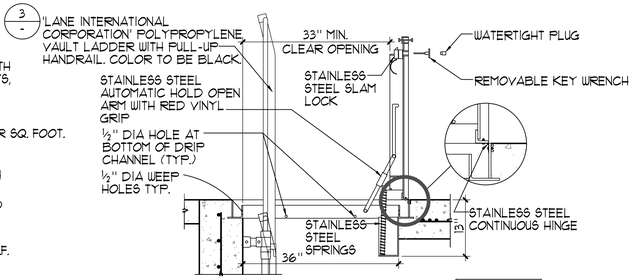

2 SURGE CHAMBER ACCESS COVER

¾"=1'-0"

CONTRACTOR TO VERIFY:

- (A) OVERALL LADDER HEIGHT
- (B) LADDER WIDTH

'LANE INTERNATIONAL CORPORATION' POLYPROPYLENE VAULT LADDER WITH PULL-UP HANDRAIL. COLOR TO BE BLACK.

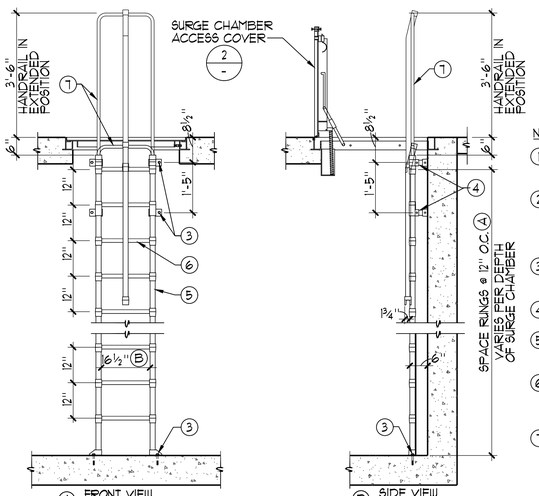

NOTES:

1. LADDERS WITH PULL-UP HANDRAIL AVAILABLE IN 5 RUNG THROUGH 25 RUNG.
2. POLYPROPYLENE CONFORMS TO ASTM D-4101. LADDERS MEET ALL ASTM C-497 LOAD REQUIREMENTS AND OSHA 1910.26 AND 1910.27 SPECIFICATIONS.
3. FASTEN LADDER TO FLOOR AND WALL WITH ½"ø STAINLESS STEEL HILTI KB TZ (ESR 1917) W/ 2" MIN. EMBED TYP.
4. STANDARD ADJUSTABLE MOUNTING BRACKET - 8" O.D.
5. ALUMINUM REINFORCED COPOLYMER POLYPROPYLENE RAIL 1¾" x 1¾" DIA.
6. STEEL REINFORCED COPOLYMER POLYPROPYLENE RUNG 1⅜" x 1¼" DIA. WITH MOLDED FINGER GRIPS, 12" C.C.
7. ALUMINUM AND STEEL REINFORCED COPOLYMER POLYPROPYLENE PULL-UP HANDRAIL.

3 SURGE CHAMBER ACCESS LADDER

½" = 1'-0"

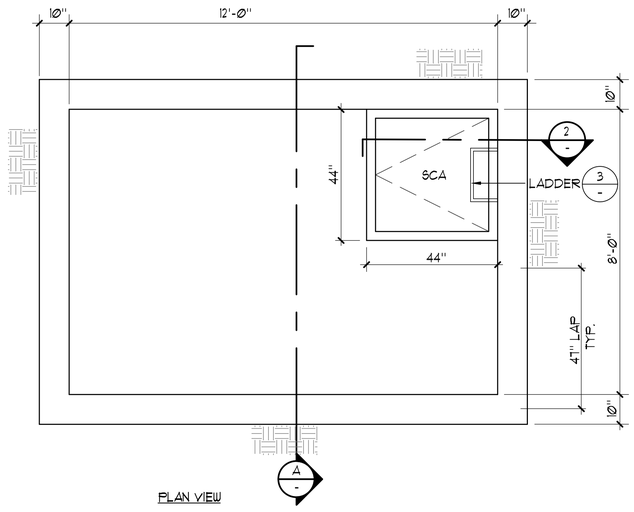

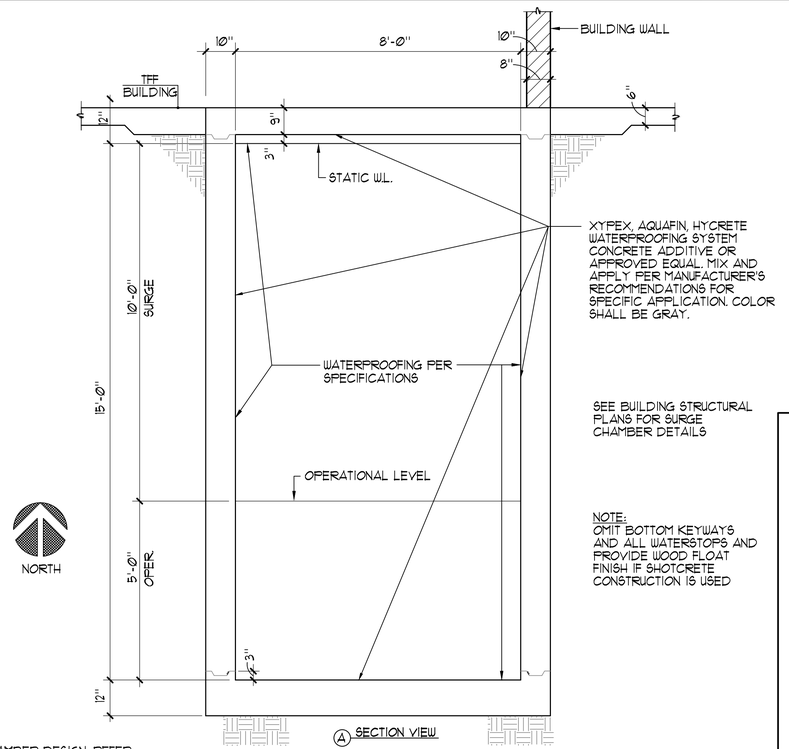

NOTE:
OMIT BOTTOM KEYWAYS AND ALL WATERSTOPS AND PROVIDE WOOD FLOAT FINISH IF SHOTCRETE CONSTRUCTION IS USED

NORTH

REFER TO STRUCTURAL PLANS FOR SURGE CHAMBER DESIGN. REFER TO THIS DETAIL FOR OVERALL DIMENSIONS AND WATER LEVELS ONLY.

4 SURGE CHAMBER

½"=1'-0"

AQUATIC DESIGN GROUP
2228 Faraday Ave, Carlsbad, CA 92008
AquaticDesignGroup.com
760-438-2400

ENGINEERING
CITY OF LOS ANGELES

DEPARTMENT OF PUBLIC WORKS
BUREAU OF ENGINEERING

NO.	REVISION DESCRIPTION	DATE	BY

BUILDING NO. -

INDEX NO. RP-300118

LICENSED ARCHITECT REGISTERED PROFESSIONAL ENGINEER STATE OF CALIFORNIA C-26222 REN. 08/31/21

BUREAU OF ENGINEERING OFFICIAL RECORD

CITY ENGINEER

	DATE:
	12/01/2019
	12/01/2019
	12/01/2019
	12/01/2019
	12/01/2019

GARY LEE MOORE, PE, ENV SP
CITY ENGINEER

ARCHITECT/ENGINEER: SJF LIC. NO.: C-26222
ARCHITECTURAL DIVISION
DESIGNED BY: SJF
DRAWN BY: GSF
CHECKED BY: SJF
APPROVED BY: SJF

CITY OF LOS ANGELES

VERTICAL CONTROL:
HORIZONTAL CONTROL:

SHEET TITLE: DETAILS

PROJECT: GRANADA HILLS POOL AND BATHHOUSE REPLACEMENT PROJECT

ADDRESS: 16730 CHATSWORTH STREET GRANADA HILLS, CA 91344

BID SET
PROJECT ISSUE DATE:06/22/21.

WORK ORDER NO. #E170517

PLAN FILE NO.

DRAWING NO. SP-6

SHEET O F SHEETS

PLOTTED: 6/26/2018 2:53:10 PM

THE CITY OF LOS ANGELES OR ITS OFFICERS OR AGENTS SHALL NOT BE RESPONSIBLE FOR THE ACCURACY OR COMPLETENESS OF ELECTRONIC COPIES OF THIS PLAN SHEET.

TTLB TEMPLATE REVISION DATE: 02/2013
SHEET ISSUE DATE: 12/01/19
FILE PATH: BIM 360://Granada Hills Pool Renovation/A_Granada-Hills_2017.rvt

REVISION DATES (DESIGN STAGE ONLY)

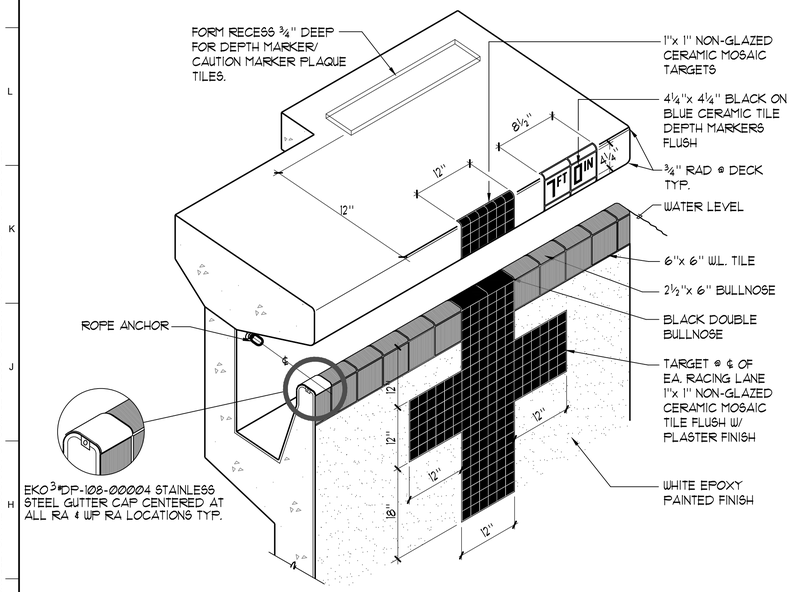

1 DEEP GUTTER PERSPECTIVE

NO SCALE

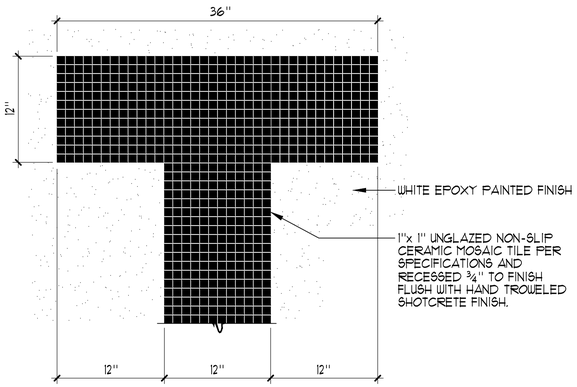

PLAN VIEW

2 RACING LANE LINE

1½"=1'-Ø"

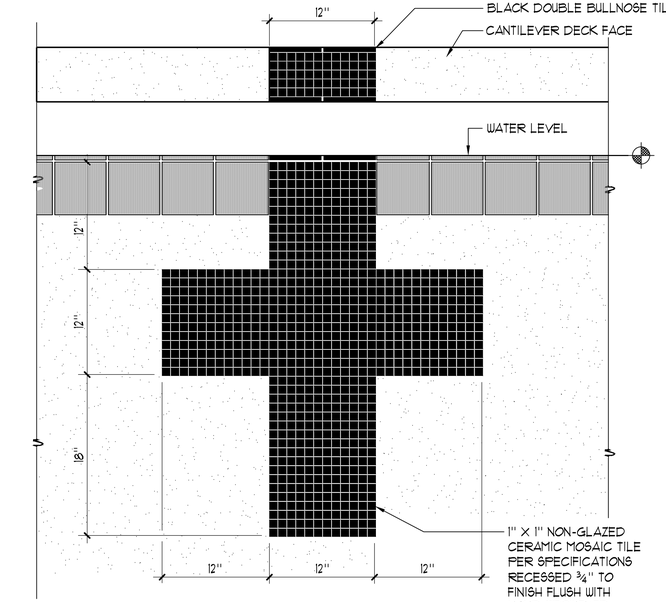

3 END WALL TARGET

1½" = 1'-Ø"

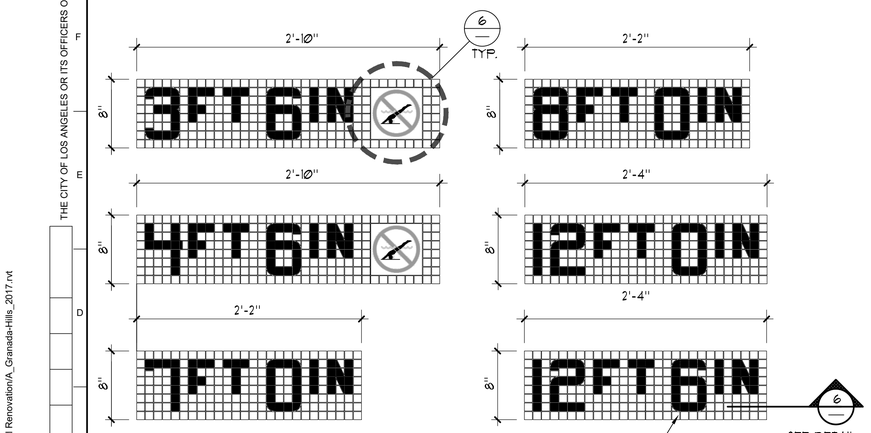

4 DEPTH MARKERS

1½" = 1'-Ø"

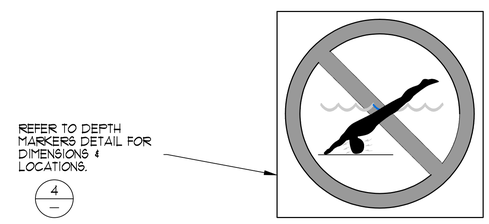

NOTE: PLACE IN DECK AT ALL DEPTH MARKER LOCATION OF 6'-Ø" OR LESS.

SILK SCREEN

1. INLAYS DOUBLE GLAZED WHITE SLIP RESISTANT TILE TYP. OF (1) PIECE OVER ¼" MORTAR BED WITH 1/16" GROUT JOINTS. SEE PLAN FOR LOCATION.
2. 1" WIDE RED CIRCLE WITH 1" WIDE RED DIAGONAL LINE.
3. ⅛" BLUE WATER.
4. 1/16" RED TICKS ABOUT THE HEAD.
5. TAN COLOR BODY WITH BLACK OUTLINE, HAIR AND TRUNKS.
6. ⅛" BLACK POOL FLOOR.

5 INTERNATIONAL "NO DIVING" MARKER

3"=1'-Ø"

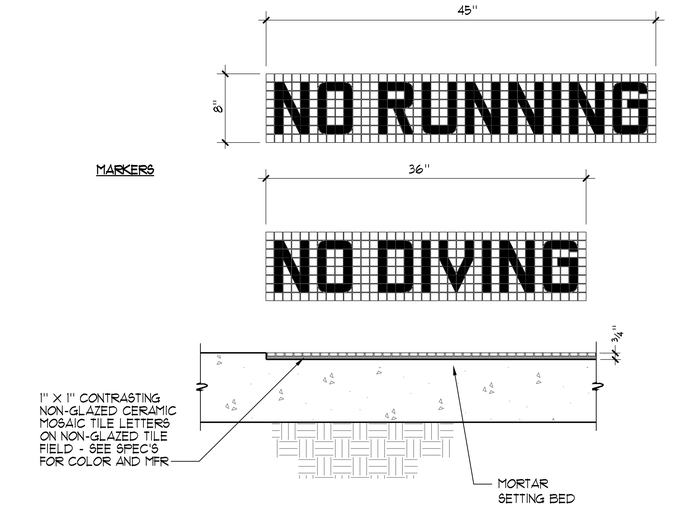

SECTION THROUGH TILE

6 "NO RUNNING" / "NO DIVING" MARKERS

1½" = 1'-Ø"

BUREAU OF ENGINEERING
OFFICIAL RECORD

AQUATIC DESIGN GROUP
2226 Faraday Ave, Carlsbad, CA 92008
760.438.3200

ENGINEERING
CITY OF LOS ANGELES

BUREAU OF ENGINEERING

NO.	REVISION DESCRIPTION	DATE	BY

BUILDING NO. -

INDEX NO. RP-300118

LICENSED ARCHITECT GARY L. MOORE STATE OF CALIFORNIA C-28222 REN. 08/31/21

CITY ENGINEER

DATE:
12/01/2019
12/01/2019
12/01/2019
12/01/2019
12/01/2019

DEPARTMENT OF PUBLIC WORKS

GARY LEE MOORE, PE, ENV SP
ARCHITECTURAL DIVISION

ARCHITECT/ENGINEER: SJF LIC. NO.: C-28222
DESIGNED BY: SJF
DRAWN BY: GSF
CHECKED BY: SJF
APPROVED BY: SJF

CITY OF LOS ANGELES

VERTICAL CONTROL:
HORIZONTAL CONTROL:

SHEET TITLE: DETAILS

PROJECT: GRANADA HILLS POOL AND BATHHOUSE REPLACEMENT PROJECT

ADDRESS: 16730 CHATSWORTH STREET GRANADA HILLS, CA 91344

BID SET
PROJECT ISSUE DATE:06/22/21.

WORK ORDER NO. #E170517

PLAN FILE NO.

DRAWING NO. SP-7

SHEET OF SHEETS

PLOTTED: 6/26/2018 2:53:10 PM

THE CITY OF LOS ANGELES OR ITS OFFICERS OR AGENTS SHALL NOT BE RESPONSIBLE FOR THE ACCURACY OR COMPLETENESS OF ELECTRONIC COPIES OF THIS PLAN SHEET.

TTLB TEMPLATE REVISION DATE: 02/2013
SHEET ISSUE DATE: 12/01/19
FILE PATH: BIM 360://Granada Hills Pool Renovation/A_Granada-Hills_2017.rvt

REVISION DATES (DESIGN STAGE ONLY)

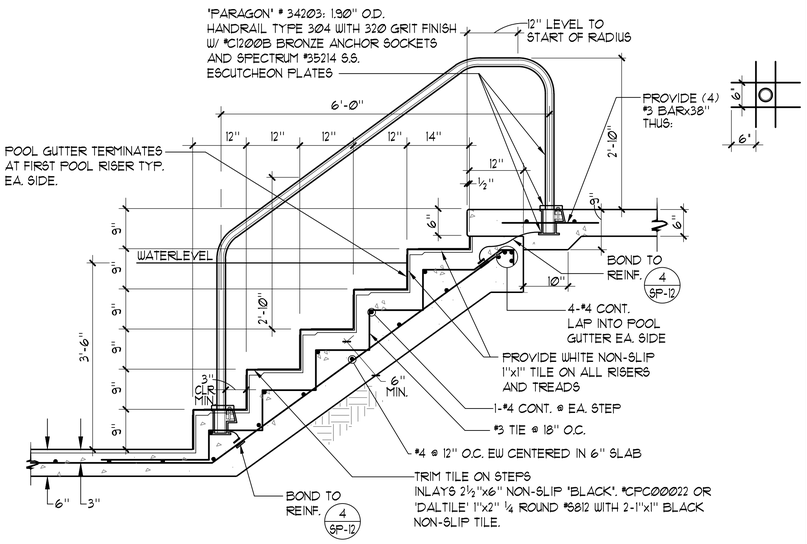

1 HANDRAIL DETAIL ¾"=1'-0"

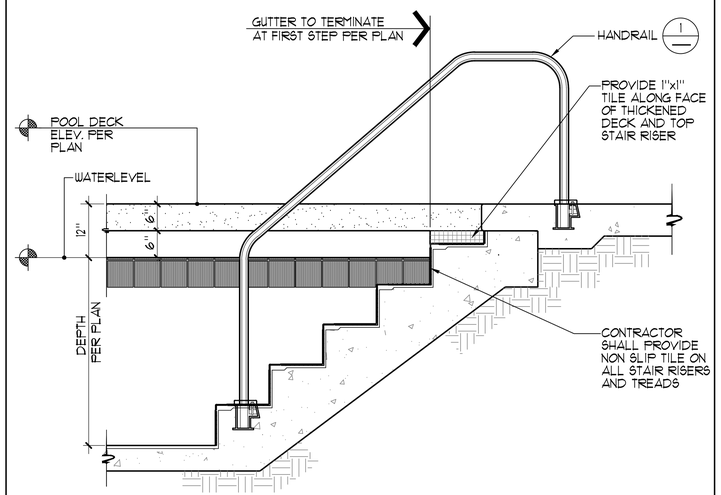

2 GUTTER EDGE AT STAIRS ¾"=1'-0"

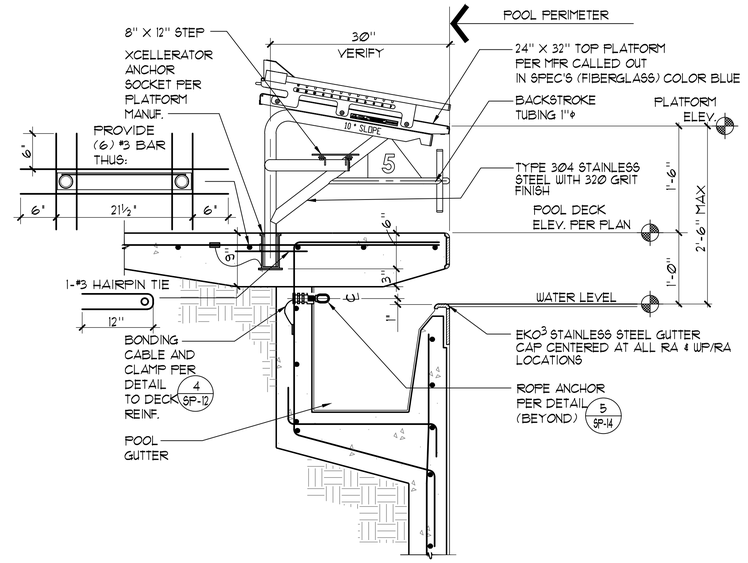

3 RACING PLATFORM 1"=1'-0"

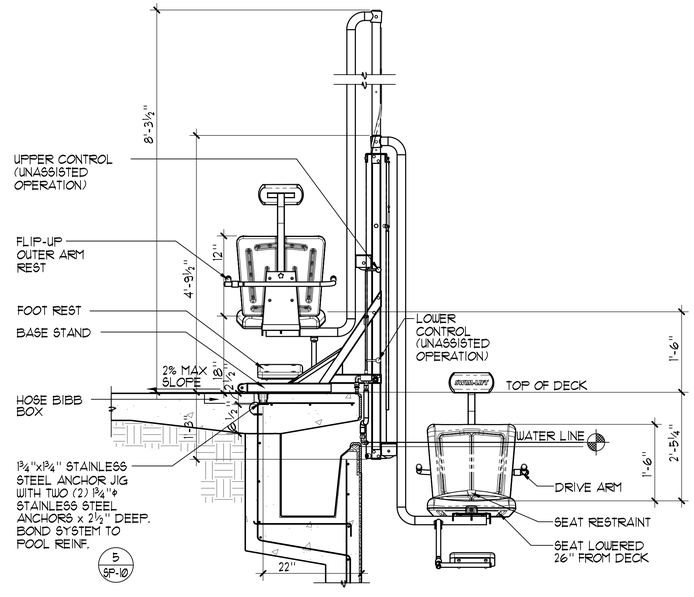

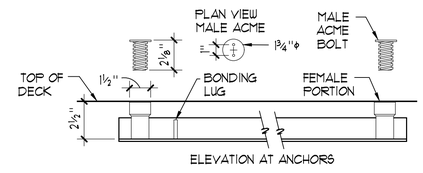

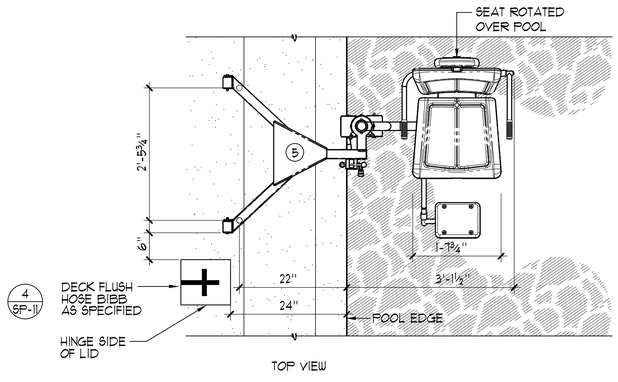

TOP VIEW

4 ACCESSIBLE LIFT ¾"=1'-0"

NOTES:

1. GALLATIN #27336 PROVIDE DOMESTIC WATER SOURCE IN FLUSH MOUNTED DECK BOX ADJACENT TO LIFT. (300 lb. CAPACITY MIN.)
2. CLEAR DECK SPACE SHALL BE PROVIDED PARALLEL TO THE WATER 36" WIDE x 48" MINIMUM FROM A LINE LOCATED 2" BEHIND THE REAR EDGE OF THE SEAT.
3. ACTUATOR HOSE TO BE BRAIDED STAINLESS STEEL HOSE. LENGTH AS NEEDED.
4. ACTUATOR HOSE TO BE ATTACHED TO LIFT FRAME WITH NYLON ZIP TIES. TRIM ANY EXCESS LENGTH FROM ZIP TIES.
5. GUSSET COVER PLATE TO BE ATTACHED REQUIRING A TOOL FOR REMOVAL.
6. POOL LIFT SHALL BE LOCATED WHERE THE WATER LEVEL IS AT LEAST 36" AND DOES NOT EXCEED 48" DEEP , UNLESS ENTIRE POOL IS GREATER THAT 48" DEEP. (CBC SECTION 11B-1009.2.1)
7. ON THE RAISED POSITION, THE CENTERLINE OF THE SEAT SHALL BE LOCATED OVER THE DECK AND 16" MINIMUM FROM THE EDGE OF THE POOL. THE DECK SURFACE BETWEEN THE CENTERLINE OF THE SEAT AND THE POOL EDGE SHALL HAVE A 2% MAX. SLOPE. (CBC SECTION 11B-1009.2.2)
8. CLEAR DECK SPACE SHALL BE PROVIDED ON SIDE OF SEAT OPPOSITE THE WATER PARALLEL TO THE WATER 36" WIDE x 48" MINIMUM FROM A LINE LOCATED 12" BEHIND THE REAR EDGE OF THE SEAT. THE CLEAR SPACE SHALL HAVE A 2% MAX. SLOPE. (CBC SECTION 11B-1009.2.3)
9. THE HEIGHT OF THE LIFT SEAT SHALL BE DESIGNED TO ALLOW A STOP AT 17" MIN. TO 19" MAX. MEASURED FROM THE DECK TO THE TOP OF THE SEAT SURFACE WHEN IN THE RAISED POSITION. (CBC SECTION 11B-1009.2.4)
10. THE SEAT SHALL BE RIGID AND 17" MIN. TO 19" MAX. WIDE. THE LIFT SEAT SHALL HAVE A BACK SUPPORT 12" MIN. TALL. (CBC SECTION 11B-1009.2.4)
11. FOOTRESTS SHALL BE PROVIDED, EXCEPT FOR SPA LIFTS, AND SHALL MOVE WITH THE SEAT. LIFT SHALL HAVE TWO ARMRESTS. THE ARMREST POSITIONED OPPOSITE THE WATER SHALL BE REMOVABLE OR SHALL FOLD CLEAR OF THE SEAT WHEN THE SEAT IS IN THE RAISED POSITION. (CBC SECTION 11B-1009.2.6)
12. THE LIFT SHALL BE CAPABLE OF UNASSISTED OPERATION FROM BOTH THE DECK AND WATER LEVELS. CONTROLS AND OPERATING MECHANISMS SHALL BE OPERABLE WITH ONE HAND AND SHALL BE UNOBSTRUCTED WHEN THE LIFT IS IN USE (CBC SECTION 11B-309.4). LIFT MUST BE STABLE AND NOT PERMIT UNINTENDED MOVEMENT WHEN A PERSON IS GETTING INTO OR OUT OF THE SEAT. (CBC SECTION 11B-1009.2.7)
13. THE LIFT SHALL BE DESIGNED SO THAT THE SEAT WILL SUBMERGE TO A WATER DEPTH OF 18" MIN. BELOW THE STATIONARY WATER LEVEL. (CBC SECTION 11B-1009.2.8)
14. LIFT SEAT MUST HAVE AN OCCUPANT RESTRAINT FOR USE BY THE OCCUPANT OF THE SEAT AND THE RESTRAINT MUST MEET THE STANDARDS FOR OPERABLE CONTROLS IN COMPLIANCE WITH CBC SECTION 11B-1009.2.4 AND SECTION 11B-309.

BUREAU OF ENGINEERING
OFFICIAL RECORD

AQUATIC DESIGN GROUP
2226 Faraday Ave, Carlsbad, CA 92008
AquaticDesignGroup.com
760.438.8430

ENGINEERING
CITY OF LOS ANGELES

BUREAU OF ENGINEERING

NO.	REVISION DESCRIPTION	DATE	BY

BUILDING NO. -

INDEX NO. RP-300118

LICENSED ARCHITECT ROBERT SILVA C-26222 REN. 08/31/21 STATE OF CALIFORNIA

CITY ENGINEER

	DATE:
ARCHITECT/ENGINEER: SJF	12/01/2019
DESIGNED BY: SJF	12/01/2019
DRAWN BY: GSF	12/01/2019
CHECKED BY: SJF	12/01/2019
APPROVED BY: SJF	12/01/2019

GARY LEE MOORE, PE, ENV SP
ARCHITECTURAL DIVISION
LIC. NO.: C-26222

DEPARTMENT OF PUBLIC WORKS
CITY OF LOS ANGELES

VERTICAL CONTROL:
HORIZONTAL CONTROL:

SHEET TITLE: DETAILS

PROJECT: GRANADA HILLS POOL AND BATHHOUSE REPLACEMENT PROJECT

ADDRESS: 16730 CHATSWORTH STREET GRANADA HILLS, CA 91344

BID SET
PROJECT ISSUE DATE:06/22/21.

WORK ORDER NO. #E170517

PLAN FILE NO.

DRAWING NO. SP-8

SHEET OF SHEETS

PLOTTED:6/26/2018 2:53:10 PM

THE CITY OF LOS ANGELES OR ITS OFFICERS OR AGENTS SHALL NOT BE RESPONSIBLE FOR THE ACCURACY OR COMPLETENESS OF ELECTRONIC COPIES OF THIS PLAN SHEET.

TTLB TEMPLATE REVISION DATE: 02/2013
SHEET ISSUE DATE: 12/01/19
FILE PATH: BIM 360://Granada Hills Pool Renovation/A_Granada-Hills_2017.rvt

REVISION DATES (DESIGN STAGE ONLY)

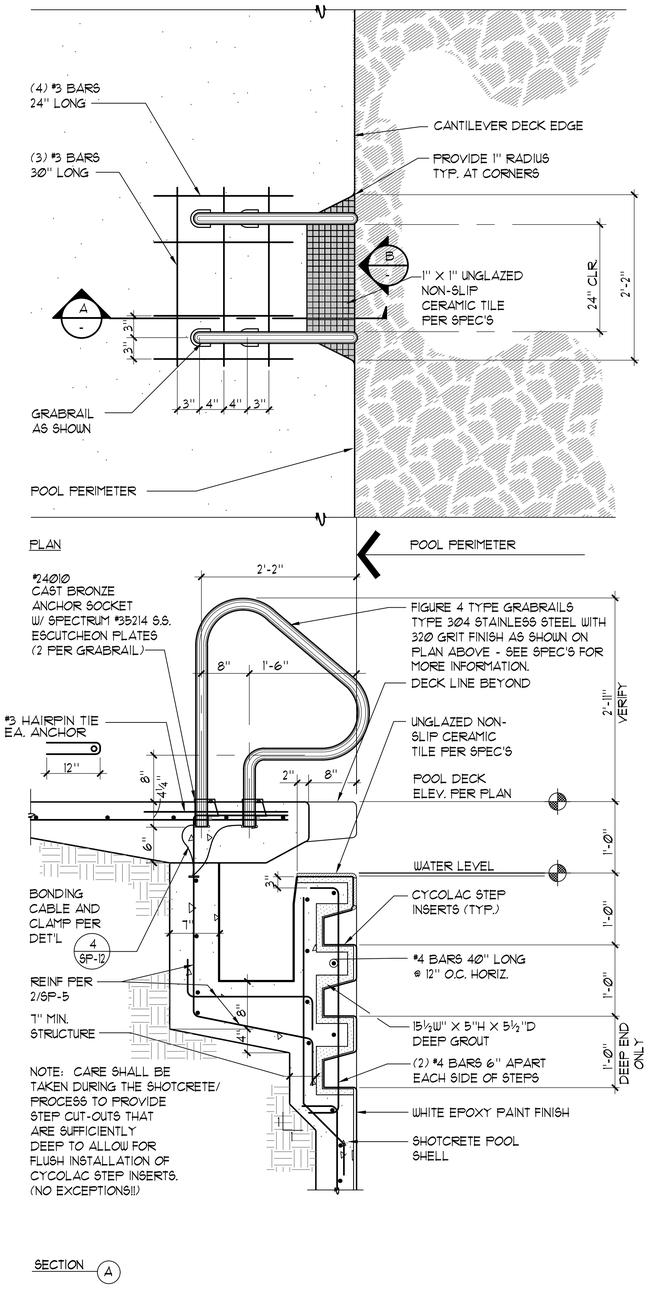

1 **GRABRAIL WITH STEPS** 1"=1'-0"

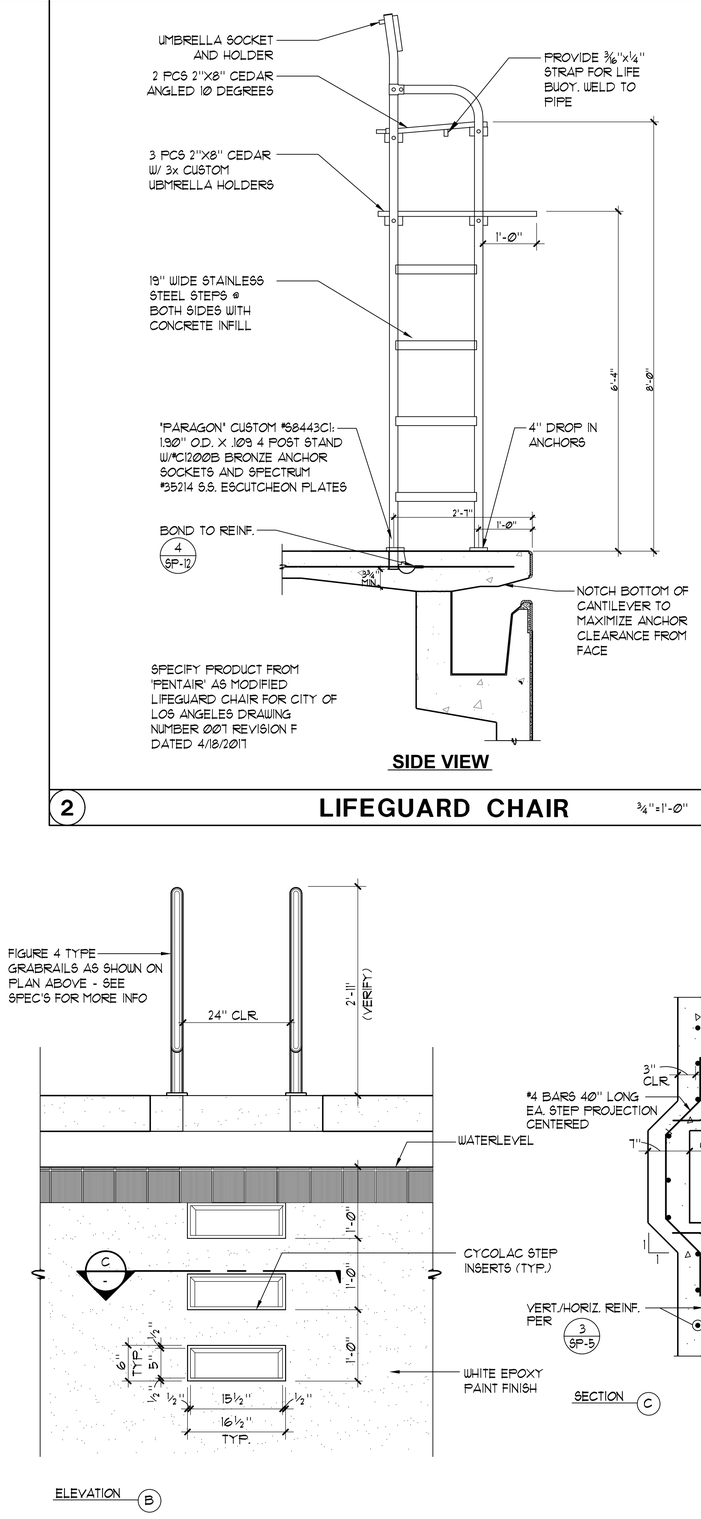

2 **LIFEGUARD CHAIR** ¾"=1'-0"

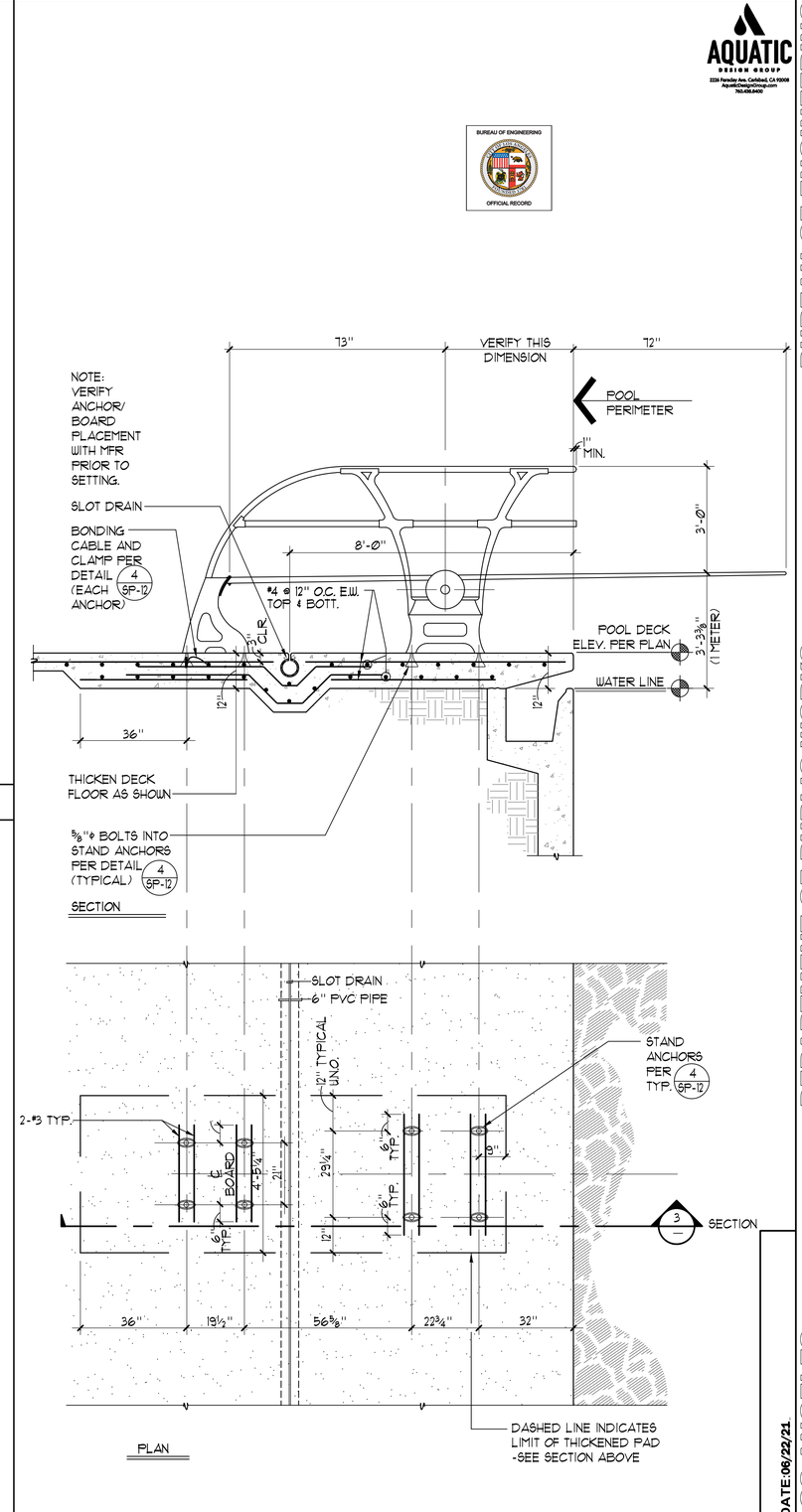

3 **1 METER DIVE STAND** ½"=1'-0"

AQUATIC DESIGN GROUP
2220 Faraday Ave, Carlsbad, CA 92008
AquaticDesignGroup.com
760-438-2400

BUREAU OF ENGINEERING
OFFICIAL RECORD

ENGINEERING
CITY OF LOS ANGELES

NO.	REVISION DESCRIPTION	DATE	BY

BUILDING NO. -

INDEX NO. RP-300118

LICENSED ARCHITECT JOSEPH E. FORTE C-26222 REN. 08/31/21 STATE OF CALIFORNIA

BUREAU OF ENGINEERING

DEPARTMENT OF PUBLIC WORKS

CITY OF LOS ANGELES

CITY ENGINEER: GARY LEE MOORE, PE, ENV SP
DATE: 12/01/2019

ARCHITECT/ENGINEER:	SJF	LIC. NO.: C-26222
DESIGNED BY:	SJF	
DRAWN BY:	GSF	
CHECKED BY:	SJF	
APPROVED BY:	SJF	

VERTICAL CONTROL:
HORIZONTAL CONTROL:

SHEET TITLE: DETAILS

PROJECT: GRANADA HILLS POOL AND BATHHOUSE REPLACEMENT PROJECT

ADDRESS: 16730 CHATSWORTH STREET GRANADA HILLS, CA 91344

BID SET
PROJECT ISSUE DATE: 06/22/21.

WORK ORDER NO. #E170517
PLAN FILE NO.
DRAWING NO. SP-9
SHEET 9 OF SHEETS

PLOTTED: 6/26/2018 2:53:10 PM

REVISION DATES (DESIGN STAGE ONLY)

THE CITY OF LOS ANGELES OR ITS OFFICERS OR AGENTS SHALL NOT BE RESPONSIBLE FOR THE ACCURACY OR COMPLETENESS OF ELECTRONIC COPIES OF THIS PLAN SHEET.

TTLB TEMPLATE REVISION DATE: 02/2013
SHEET ISSUE DATE: 12/01/19
FILE PATH: BIM 360://Granada Hills Pool Renovation/A_Granada-Hills_2017.rvt

THE CITY OF LOS ANGELES OR ITS OFFICERS OR AGENTS SHALL NOT BE RESPONSIBLE FOR THE ACCURACY OR COMPLETENESS OF ELECTRONIC COPIES OF THIS PLAN SHEET.

TTLB TEMPLATE REVISION DATE: 02/2013
SHEET ISSUE DATE: 12/01/19
FILE PATH: BIM 360://Granada Hills Pool Renovation/A_Granada-Hills_2017.rvt

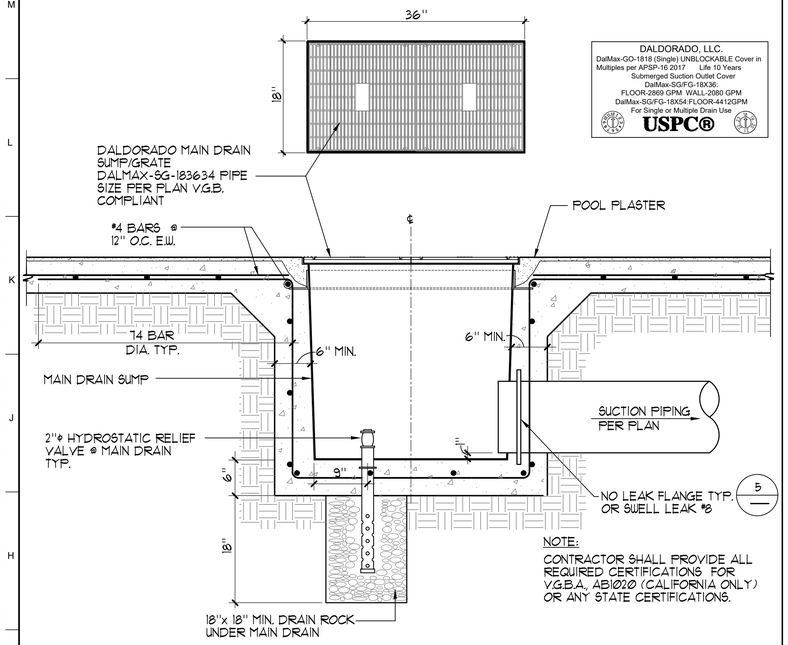

1 MAIN DRAIN 1"=1'-Ø"

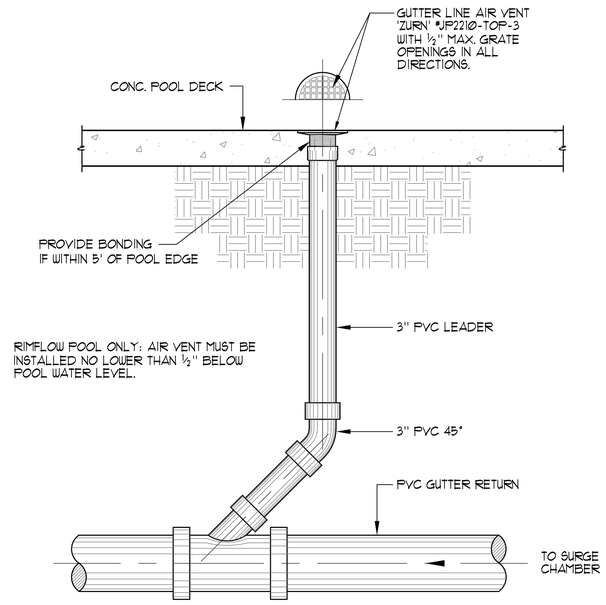

2 AIR VENT 1"=1'-Ø"

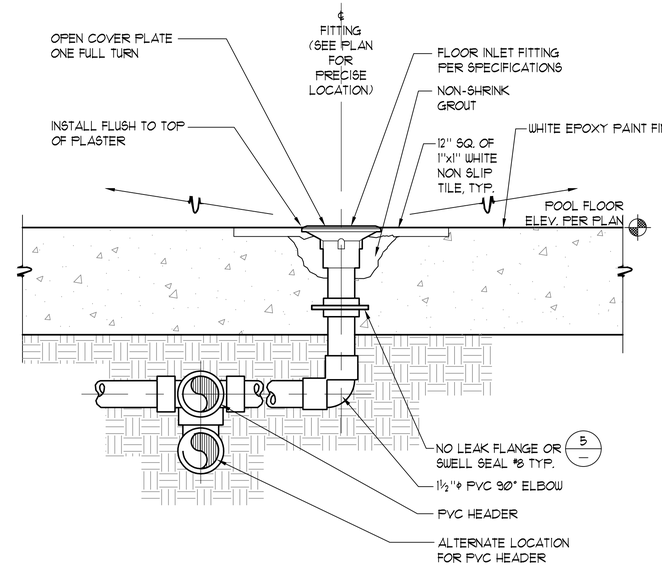

3 FLOOR INLET 3"=1'-Ø"

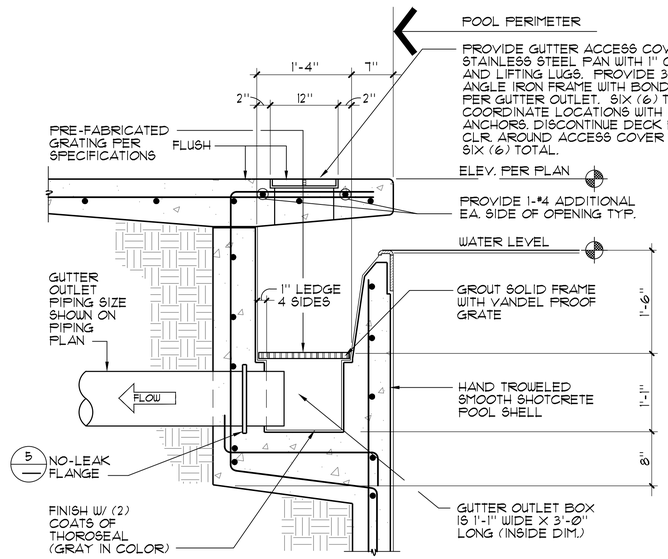

GUTTER OUTLET

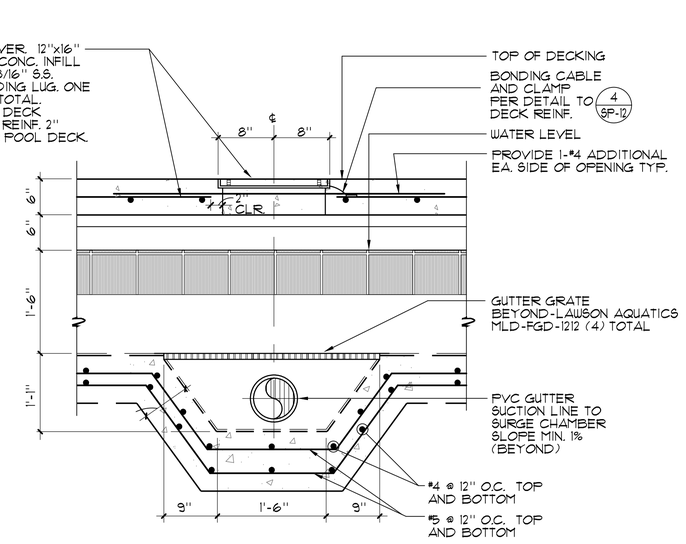

ELEVATION

4 GUTTER OUTLET 1"=1'-Ø"

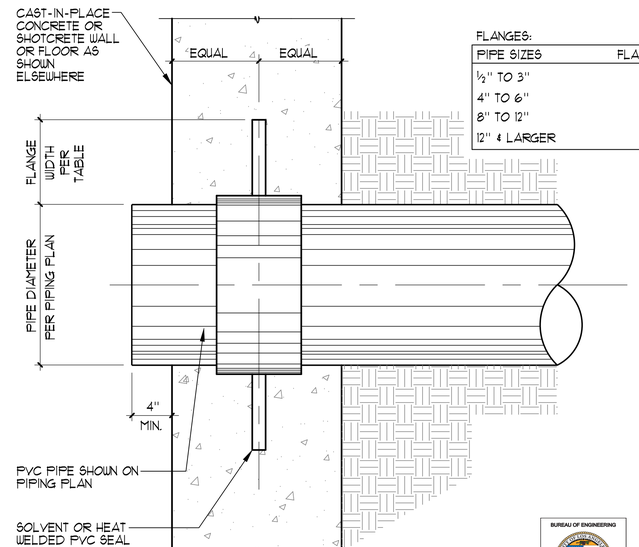

5 WATER STOP DETAIL NO SCALE

AQUATIC DESIGN GROUP
2220 Faraday Ave, Carlsbad, CA 92008
AquaticDesignGroup.com
760-438-2400

ENGINEERING
CITY OF LOS ANGELES

DEPARTMENT OF PUBLIC WORKS
BUREAU OF ENGINEERING
CITY OF LOS ANGELES

NO.	REVISION DESCRIPTION	DATE	BY

BUILDING NO. -
INDEX NO. RP-300118

LICENSED ARCHITECT GARY L. MOORE C-28222 REN. 08/31/21 STATE OF CALIFORNIA

CITY ENGINEER
DATE:
12/01/2019
LIC. NO. C-28222

GARY LEE MOORE, PE, ENV SP
ARCHITECTURAL DIVISION

ARCHITECT/ENGINEER: SJF
DESIGNED BY: SJF
DRAWN BY: GSF
CHECKED BY: SJF
APPROVED BY: SJF

VERTICAL CONTROL:
HORIZONTAL CONTROL:

SHEET TITLE: DETAILS

PROJECT: GRANADA HILLS POOL AND BATHHOUSE REPLACEMENT PROJECT
ADDRESS: 16730 CHATSWORTH STREET GRANADA HILLS, CA 91344

BUREAU OF ENGINEERING
OFFICIAL RECORD

BID SET
PROJECT ISSUE DATE: 06/22/21

WORK ORDER NO. #E170517
PLAN FILE NO.
DRAWING NO. SP-10
SHEET 10 OF SHEETS

PLOTTED: 6/26/2018 2:53:10 PM

REVISION DATES (DESIGN STAGE ONLY)

THE CITY OF LOS ANGELES OR ITS OFFICERS OR AGENTS SHALL NOT BE RESPONSIBLE FOR THE ACCURACY OR COMPLETENESS OF ELECTRONIC COPIES OF THIS PLAN SHEET.

TTLB TEMPLATE REVISION DATE: 02/2013
SHEET ISSUE DATE: 12/01/19
FILE PATH: BIM 360://Granada Hills Pool Renovation/A_Granada-Hills_2017.rvt

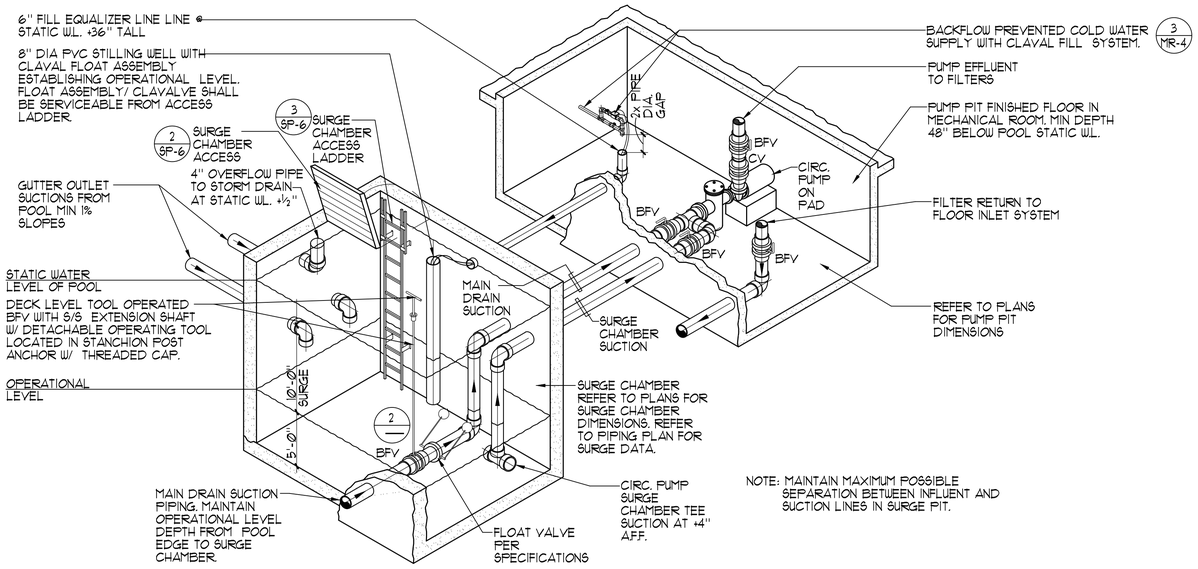

1 SURGE CHAMBER PIPING SCHEMATIC

NO SCALE

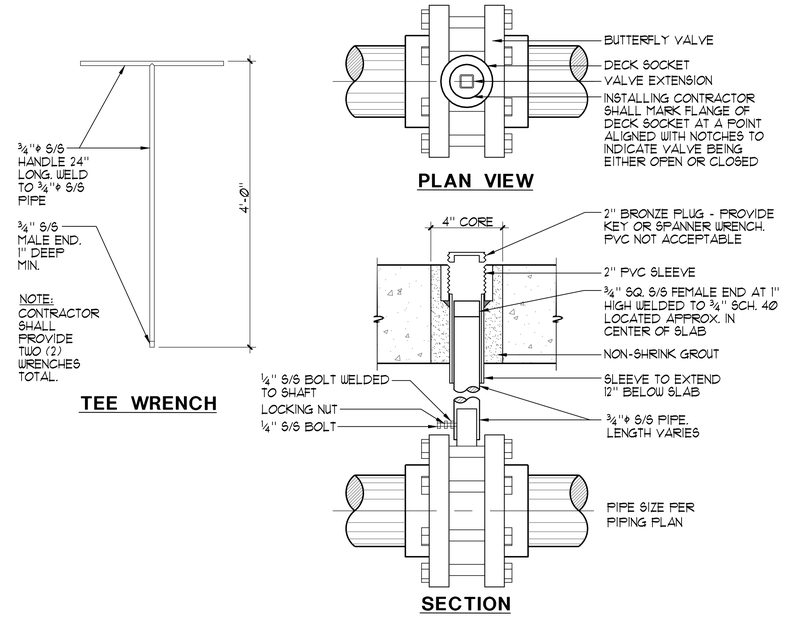

2 SURGE CHAMBER BUTTERFLY VALVE / EXTENSION DETAIL

NO SCALE

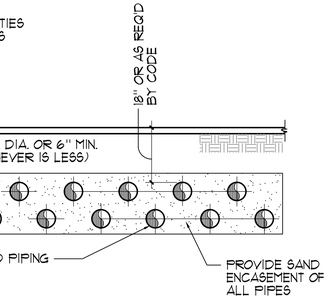

3 STACKED UNDERGROUND PIPING

NO SCALE

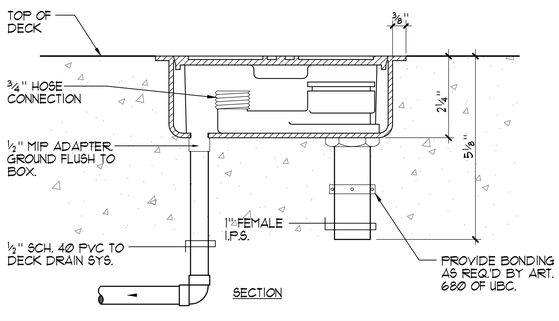

4 HOSE BIBB

½"=1"

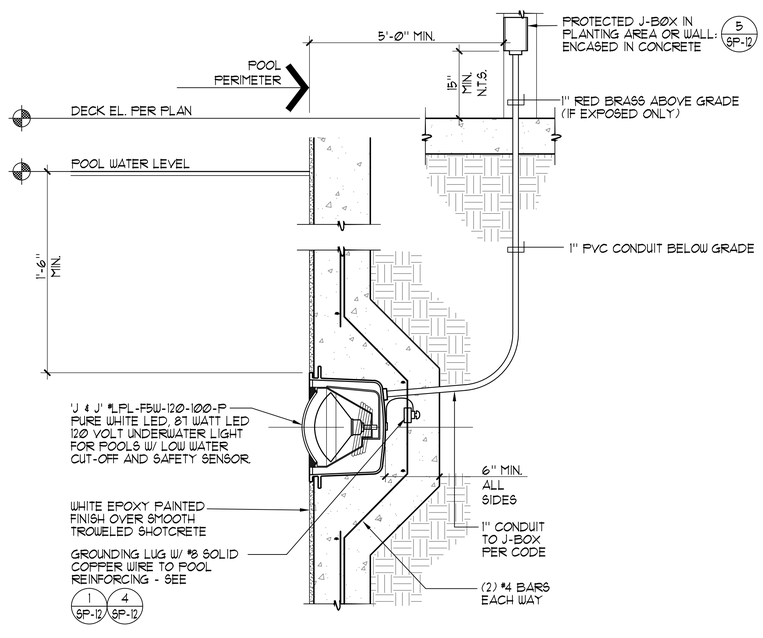

5 UNDERWATER LED LIGHT

1½"=1'-0"

UNDERWATER LIGHT NOTES:

1. ALL CONDUITS IN POOL LIGHTING SYSTEM TO BE A MINIMUM OF 1"ϕ.
2. CONDUCTORS TO POOL, J-BOXES SHALL BE MINIMUM 2-#8 & 1#8 (SEE UNDERWATER LIGHT PLAN) SOLID UNBROKEN TO MAIN PANEL ISOLATED GROUND BUSS. THIS BUSS IS TO BE CONNECTED WITH SOLID INSULATED #8 COPPER WIRE TO UFER & COLDWATER GROUNDING LUG ON GROUNDING BUSS. UPSIZE CONDUCTORS AS REQUIRED FOR HOMERUNS EXCEEDING 100'. (1 SP-12)
3. ALL BRASS POOL J-BOXES SHALL BE FLUSH MOUNTED IN WALLS. IF FLUSH MOUNTING IS NOT POSSIBLE THEN MOUNTING SHALL BE SURFACE MOUNTED AND CONCRETE ENCASED. (5 SP-12)
4. CONDUITS WHERE ALLOWED BY CODE SHALL BE P.V.C. (POLYVINYL CHLORIDE) FROM WET NICHES TO BRASS J-BOXES TO LIGHTING PANEL. ALL CONDUITS IN FREE AIR SPACE AND ALL RISERS SHALL BE RED BRASS TYPICAL. PVC CONDUITS SHALL BE SOLVENT WELDED WITH PURPLE PRIMER AND GRAY HEAVY BODIED GLUE.
5. LIGHTING CONTACTORS SHALL BE 'ALLEN-BRADLEY' #500 L± OR EQUAL MOUNTED IN A NEMA 12 HINGED COVER - LOCKABLE ENCLOSURE. CONTACTORS TO BE SWITCHED BY MOMENTARY SWITCH EQUAL TO 'HUBBELL' #1557 MOUNTED IN J-BOX IN MECHANICAL EQUIPMENT ROOM. REFER TO ELECTRICAL PLANS FOR LOCATION OF OWNER COORDINATED REMOTE UNDERWATER LIGHT SWITCH.
6. BRASS POOL J-BOXES SHALL BE 'HYDREL' #1119 ± W/ 1" HUBS OR EQUAL. (NO DIE CAST BOXES).
7. STRINGS SHALL BE PULLED IN ALL CONDUITS PRIOR TO PLACEMENT OF CONCRETE.
8. LOCAL, COUNTY OR CITY CODES SHALL BE ADHERED TO. SPECIFICATIONS TO BE IN ACCORDANCE WITH SECTION 680 OF LATEST N.E.C. BOOK.
9. PROVIDE PULL BOXES AS MAY BE REQUIRED FOR RUNS EXCEEDING 150 FT. OR DUE TO CHANGES IN GRADE OR DIRECTION.
10. CONTRACTOR SHALL TEST UNDERWATER POOL LIGHT GFIC CIRCUITS AND PROVIDE LETTER TO OWNER/DSA UPON SUCCESSFUL TEST.
11. SEAL CONDUIT OPENING IN LIGHT NICHE WITH SILICON CAULKING AFTER LIGHT IS INSTALLED.
12. PRIOR TO LIGHT INSTALLATION, PROVIDE MINIMUM 10 PSI PRESSURE TEST ON ALL POOL LIGHT CONDUITS FOR FOUR (4) HOURS OBSERVED BY INSPECTOR OF RECORD. MAINTAIN PRESSURE UNTIL ALL DECKS ARE POURED.

BUREAU OF ENGINEERING
OFFICIAL RECORD

AQUATIC DESIGN GROUP
2228 Faraday Ave, Carlsbad, CA 92008
AquaticDesignGroup.com
760.438.8430

DEPARTMENT OF PUBLIC WORKS
BUREAU OF ENGINEERING
CITY OF LOS ANGELES
ENGINEERING

NO.	REVISION DESCRIPTION	DATE	BY

BUILDING NO. -
INDEX NO. RP-300118

LICENSED ARCHITECT FOR REGISTRATION PURPOSES ONLY — STATE OF CALIFORNIA — C-26222 — REN. 08/31/21

CITY ENGINEER	DATE:
VERTICAL CONTROL:	12/01/2019
HORIZONTAL CONTROL:	12/01/2019
SHEET TITLE: DETAILS	12/01/2019
	12/01/2019
	12/01/2019

GARY LEE MOORE, PE, ENV SP — CITY ENGINEER

ARCHITECT/ENGINEER: SJF — LIC. NO.: C-26222 — ARCHITECTURAL DIVISION
DESIGNED BY: SJF
DRAWN BY: GSF
CHECKED BY: SJF
APPROVED BY: SJF

BID SET
PROJECT ISSUE DATE: 06/22/21.
CITY OF LOS ANGELES

PROJECT: GRANADA HILLS POOL AND BATHHOUSE REPLACEMENT PROJECT
ADDRESS: 16730 CHATSWORTH STREET GRANADA HILLS, CA 91344

WORK ORDER NO. #E170517
PLAN FILE NO.
DRAWING NO. SP-11
SHEET NO OF SHEETS

PLOTTED: 6/26/2018 2:53:10 PM

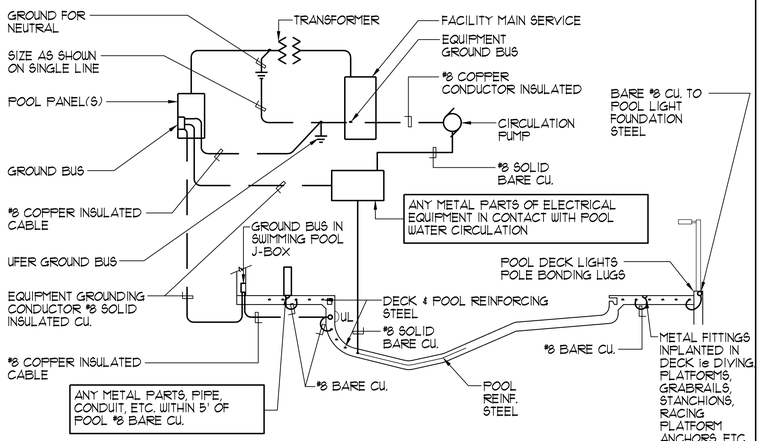

NOTE:

1. STRUCTURAL STEEL IN POOL DECK AND POOL SHALL BE BONDED TOGETHER (TIGHTLY MADE STEEL TIE-WIRES ARE APPROVED FOR BONDING STRUCTURAL ELEMENTS).
2. BONDING CONNECTOR TO COMMON GRID. (POOL STEEL MAY BE USED FOR THAT PURPOSE) SHALL BE MADE BY PRESSURE CONNECTORS OR CLAMPS OF BRASS, COPPER, OR COPPER ALLOY.
3. ALL GROUND BUSES SHALL BE SIZED FOR CONNECTION TO AWG SIZE 8 WIRE PROVIDING ONE SPARE TERMINAL.
4. GROUND AND BOND IN ACCORDANCE WITH ARTICLE 680 OF THE CALIFORNIA ELECTRICAL CODE. Ie. LADDERS, FENCING, POLE LIGHTS, DIVING & STARTING STANCHIONS, DISABLED LIFT ETC.
5. PROVIDE BONDING OF AUTOMATIC POOL COVER MOTORS REGARDLESS OF PROXIMITY TO POOL.

1 TYPICAL POOL BONDING AND GROUND DETAIL

NO SCALE

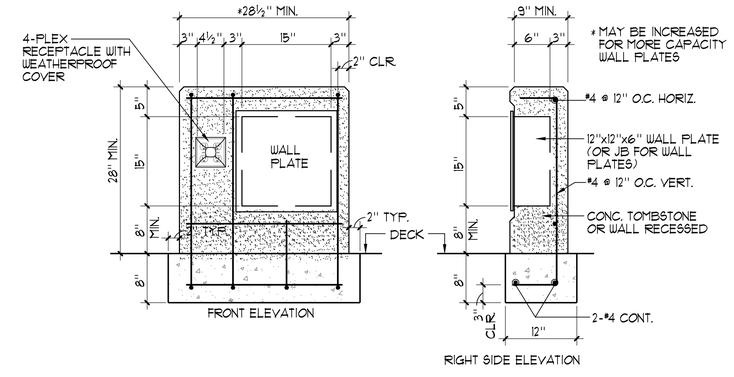

NOTE:
PROVIDE ¾" CHAMFER ON ALL CONCRETE CORNERS.

2 TIMING SYSTEM WALL PLATE CONCRETE SURROUND DETAIL

1"=1'-0"

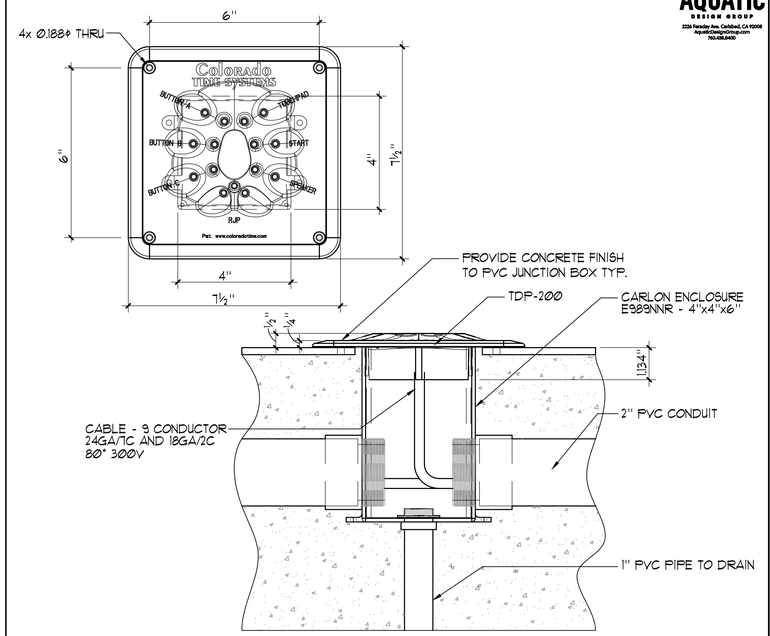

NO SCALE

3 TITANIUM DECK PLATE DETAIL (UNDER RACING PLATFORM)

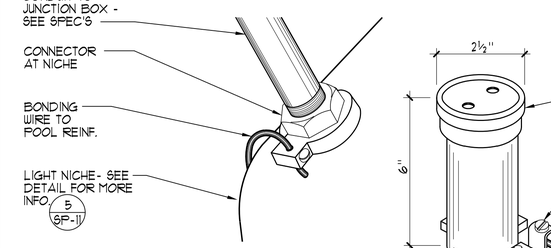

NICHE CONNECTOR

NO SCALE

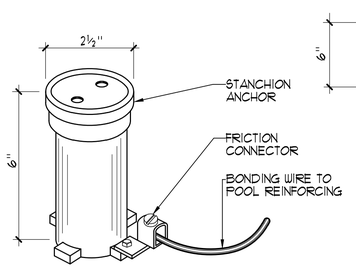

STANCHION ANCHOR

NO SCALE

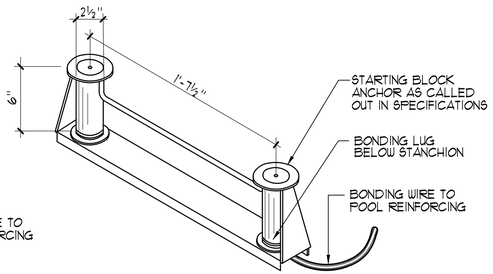

STARTING BLOCK ANCHOR

NO SCALE

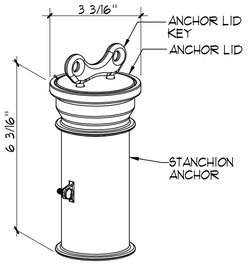

ACCESSIBLE LIFT STANCHION ANCHOR

NO SCALE

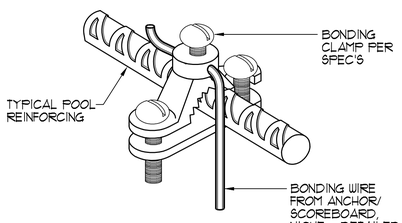

BONDING CLAMP

NO SCALE

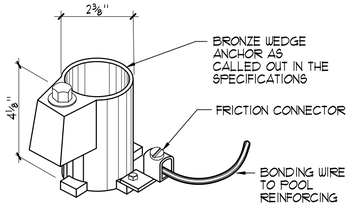

WEDGE ANCHOR

NO SCALE

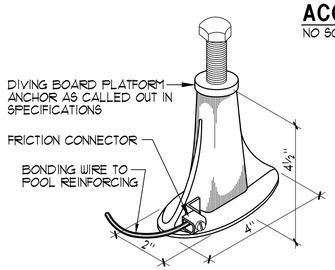

DIVING BOARD PLATFORM ANCHOR

NO SCALE

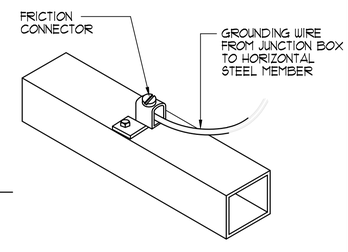

SCOREBOARD ELEC. GROUNDING

NO SCALE

4 BONDING DETAILS

NO SCALE

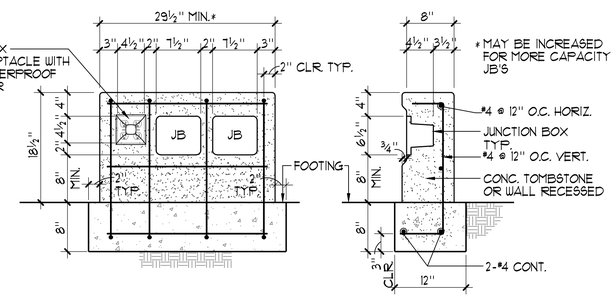

NOTE:
PROVIDE ½" RADIUS ON ALL CONCRETE CORNERS.

1"=1'-0"

5 UNDERWATER LIGHT JUNCTION BOX CONCRETE SURROUND DETAIL

BUREAU OF ENGINEERING
OFFICIAL RECORD

AQUATIC DESIGN GROUP
2220 Faraday Ave, Carlsbad, CA 92008
AquaticDesignGroup.com
760-438-8430

ENGINEERING
CITY OF LOS ANGELES

NO.	REVISION DESCRIPTION	DATE	BY

BUILDING NO. -

INDEX NO. RP-300118

LICENSED ARCHITECT ★ ROBERT SHAW JR. ★ C-28222 REN. 08/31/21 ★ STATE OF CALIFORNIA

CITY ENGINEER DATE:
12/01/2019
12/01/2019
12/01/2019
12/01/2019
12/01/2019

GARY LEE MOORE, PE, ENV SP
ARCHITECT/ENGINEER: SJF LIC. NO.: C-28222
DESIGNED BY: SJF
DRAWN BY: GSF
CHECKED BY: SJF
APPROVED BY: SJF

BID SET
PROJECT ISSUE DATE:06/22/21.

VERTICAL CONTROL:
HORIZONTAL CONTROL:

SHEET TITLE: DETAILS

PROJECT: GRANADA HILLS POOL AND BATHHOUSE REPLACEMENT PROJECT
ADDRESS: 16730 CHATSWORTH STREET GRANADA HILLS, CA 91344

WORK ORDER NO. #E170517
PLAN FILE NO.
DRAWING NO. SP-12
SHEET O F SHEETS

PLOTTED: 6/26/2018 2:53:10 PM

CITY OF LOS ANGELES DEPARTMENT OF PUBLIC WORKS BUREAU OF ENGINEERING

THE CITY OF LOS ANGELES OR ITS OFFICERS OR AGENTS SHALL NOT BE RESPONSIBLE FOR THE ACCURACY OR COMPLETENESS OF ELECTRONIC COPIES OF THIS PLAN SHEET.

TTLB TEMPLATE REVISION DATE: 02/2013
SHEET ISSUE DATE: 12/01/19
FILE PATH: BIM 360://Granada Hills Pool Renovation/A_Granada-Hills_2017.rvt

REVISION DATES (DESIGN STAGE ONLY)

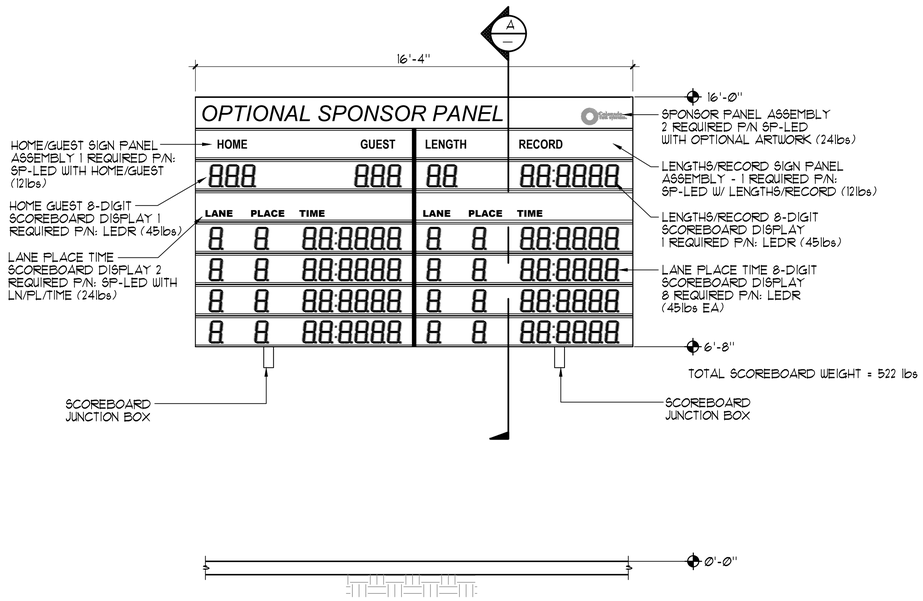

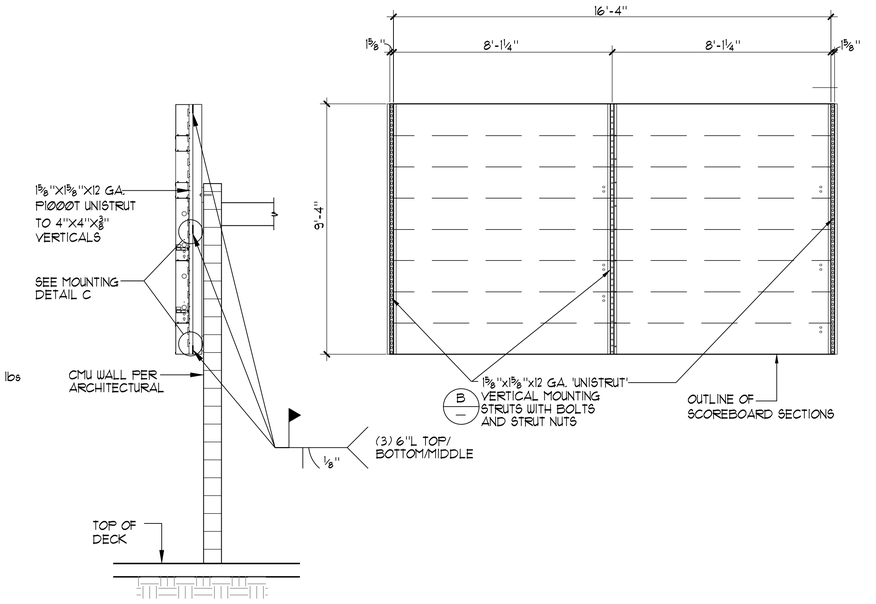

A SECTION
⅜"=1'-0"

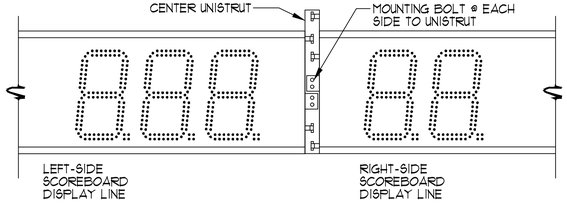

B SIDE-BY-SIDE MOUNTING DETAIL
1½"=1'-0"

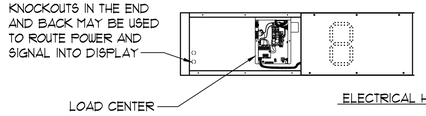

ELECTRICAL HOOKUP DETAIL

SPECIFICATIONS:

LED SCOREBOARD:
- DIGITS:
- DIGITS ARE 10" HIGH, 7 LED SEGMENTS EACH
- COLONS AND DECIMALS ARE VINYL
- CAPTIONS:
- ALL CAPTIONS ARE 5" HIGH, VINYL

IDENTIFICATION DISPLAY:
- LETTERS ARE 12" HIGH, VINYL
- DISPLAY FACE IS FINISHED ALUMINUM

GENERAL DISPLAY:
- SINGLE FACE
- ALL ALUMINUM CONSTRUCTION
- DISPLAY FINISH TO BE SPECIFIED
- DIMENSIONS ARE SUBJECT TO CHANGE DUE TO DETAILED DESIGN CONSIDERATIONS/ONLY APPROVED SHOP DRAWINGS SHOULD BE USED FOR CONSTRUCTION PURPOSES
- OUTDOOR MODELS MUST BE EARTH GROUNDED/NUMBER & LENGTHS OF RODS TO MEET LOCAL NATIONAL ELECTRIC CODE

MAXIMUM POWER CONSUMPTION:
- 700 WATTS
  120V AC, 20 AMP CIRCUIT REQUIRED

TOTAL SYSTEM WEIGHT:
- APPROXIMATELY 522 lbs

NOTE: PROVIDE SHOP DRAWINGS FOR FINAL APPROVAL AND DIMENSION VERIFICATION.

C MOUNTING DETAIL
NO SCALE

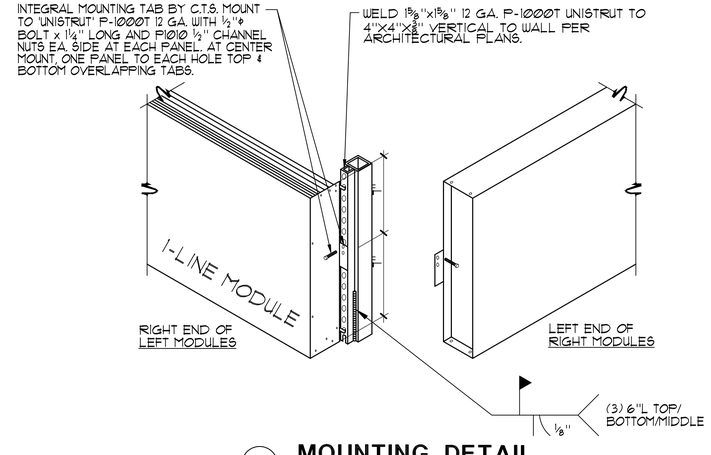

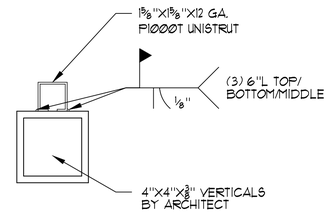

D WELDING DETAIL
3"=1'-0"

BUREAU OF ENGINEERING
OFFICIAL RECORD

1 SCOREBOARD DETAILS
AS NOTED

THE CITY OF LOS ANGELES OR ITS OFFICERS OR AGENTS SHALL NOT BE RESPONSIBLE FOR THE ACCURACY OR COMPLETENESS OF ELECTRONIC COPIES OF THIS PLAN SHEET.

TTLB TEMPLATE REVISION DATE: 02/2013
SHEET ISSUE DATE: 12/01/19
FILE PATH: BIM 360://Granada Hills Pool Renovation/A_Granada-Hills_2017.rvt

REVISION DATES (DESIGN STAGE ONLY)

AQUATIC DESIGN GROUP
2228 Faraday Ave, Carlsbad, CA 92008
AquaticDesignGroup.com
760-438-2400

ENGINEERING
CITY OF LOS ANGELES

BUREAU OF ENGINEERING

NO.	REVISION DESCRIPTION	DATE	BY

BUILDING NO. -

INDEX NO. RP-300118

LICENSED ARCHITECT ROBERT L. FORREST STATE OF CALIFORNIA C-26222 REN. 08/31/21

CITY ENGINEER

	DATE:
	12/01/2019
	12/01/2019
	12/01/2019
	12/01/2019
	12/01/2019

GARY LEE MOORE, PE, ENV SP
LIC. NO.: C-26222

ARCHITECT/ENGINEER:	SJF
ARCHITECTURAL DIVISION	
DESIGNED BY:	SJF
DRAWN BY:	GSF
CHECKED BY:	SJF
APPROVED BY:	SJF

DEPARTMENT OF PUBLIC WORKS
CITY OF LOS ANGELES

BID SET
PROJECT ISSUE DATE: 06/22/21.

VERTICAL CONTROL:
HORIZONTAL CONTROL:

SHEET TITLE: DETAILS

PROJECT: GRANADA HILLS POOL AND BATHHOUSE REPLACEMENT PROJECT

ADDRESS: 16730 CHATSWORTH STREET GRANADA HILLS, CA 91344

WORK ORDER NO. #E170517

PLAN FILE NO.

DRAWING NO. SP-13

SHEET O F SHEETS

PLOTTED: 6/26/2018 2:53:10 PM

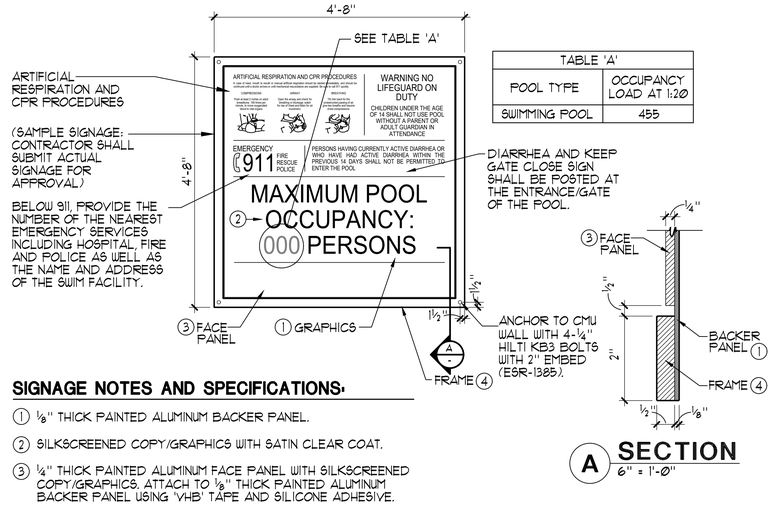

TABLE 'A'	
POOL TYPE	OCCUPANCY LOAD AT 1:20
SWIMMING POOL	455

SIGNAGE NOTES AND SPECIFICATIONS:

① ⅛" THICK PAINTED ALUMINUM BACKER PANEL.

② SILKSCREENED COPY/GRAPHICS WITH SATIN CLEAR COAT.

③ ¼" THICK PAINTED ALUMINUM FACE PANEL WITH SILKSCREENED COPY/GRAPHICS. ATTACH TO ⅛" THICK PAINTED ALUMINUM BACKER PANEL USING 'VHB' TAPE AND SILICONE ADHESIVE.

④ 2" WIDE x ½" THICK PAINTED ALUMINUM SIGN FRAME ADHERED TO ⅛" THICK PAINTED ALUMINUM BACKER USING 'LORDS' ADHESIVE AS REQUIRED. VERTICAL SECTIONS OF FRAME TO BE RECTANGULAR TUBE. FILL AND SAND SEAM ALONG EDGE AND FACE PRIOR TO PAINTING.

NOTES:
1. COORDINATE SIGNAGE PLACEMENT AND COLOR SCHEME WITH ARCHITECT/OWNER PRIOR TO INSTALLATION.
2. CONTRACTOR TO PROVIDE SHOP DRAWINGS OF PROPOSED SIGNAGE FOR REVIEW.

REQUIRED SIGNAGE:

1. ALL SIGNS SHALL HAVE CLEARLY LEGIBLE LETTERS OR NUMBERS NOT LESS THAN 4 INCHES HIGH, UNLESS OTHERWISE NOTED; AFFIXED TO CMU WALL IN A LOCATION VISIBLE TO ALL POOL USERS.

1.A. POOL USER CAPACITY SIGN: A SIGN SHALL INDICATE THE MAXIMUM NUMBER OF POOL USERS PERMITTED FOR EACH POOL.

1.B. NO LIFEGUARD SIGN: WHERE NO LIFEGUARD SERVICE IS PROVIDED, A WARNING SIGN SHALL BE POSTED STATING, "WARNING: NO LIFEGUARD ON DUTY." THE SIGN ALSO SHALL STATE IN LETTERS AT LEAST 1 INCH HIGH, "CHILDREN UNDER THE AGE OF 14 SHALL NOT USE POOL WITHOUT A PARENT OR ADULT GUARDIAN IN ATTENDANCE."

1.C. ARTIFICIAL RESPIRATION AND CPR SIGN: AN ILLUSTRATED DIAGRAM WITH TEXT AT LEAST ¼ INCH HIGH OF ARTIFICIAL RESPIRATION AND CPR PROCEDURES SHALL BE POSTED.

1.D. EMERGENCY SIGN: THE EMERGENCY TELEPHONE NUMBER 911, THE NUMBER OF THE NEAREST EMERGENCY SERVICES AND THE NAME AND STREET ADDRESS OF THE POOL FACILITY SHALL BE POSTED.

1.E. KEEP CLOSED: A SIGN SHALL BE POSTED ON THE EXTERIOR SIDE OF GATES AND DOORS LEADING INTO THE POOL ENCLOSURE AREA STATING, "KEEP CLOSED."

1.F. DIARRHEA: A SIGN IN LETTERS AT LEAST 1 INCH HIGH AND IN A LANGUAGE OR DIAGRAM THAT IS CLEARLY STATED SHALL BE POSTED AT THE ENTRANCE AREA OF A PUBLIC POOL WHICH STATES THAT PERSONS HAVING CURRENTLY ACTIVE DIARRHEA OR WHO HAVE HAD ACTIVE DIARRHEA WITHIN THE PREVIOUS 14 DAYS SHALL NOT BE ALLOWED TO ENTER THE POOL WATER.

2. DIRECTION OF FLOW SIGNAGE AND LABELS.

2.A. THE DIRECTION OF FLOW FOR THE RECIRCULATION EQUIPMENT SHALL BE LABELED CLEARLY WITH DIRECTIONAL SYMBOLS SUCH AS ARROWS ON ALL PIPING IN THE EQUIPMENT AREA.

2.B. WHERE THE RECIRCULATION EQUIPMENT FOR MORE THAN ONE POOL IS LOCATED ON SITE, THE EQUIPMENT SHALL BE MARKED AS TO WHICH POOL THE SYSTEM SERVES.

2.C. VALVES AND PLUMBING LINES SHALL BE LABELED CLEARLY WITH THE SOURCE OR DESTINATION DESCRIPTIONS.

A SECTION
6" = 1'-0"

1 POOL SIGNAGE DETAIL ¾"=1'-0"

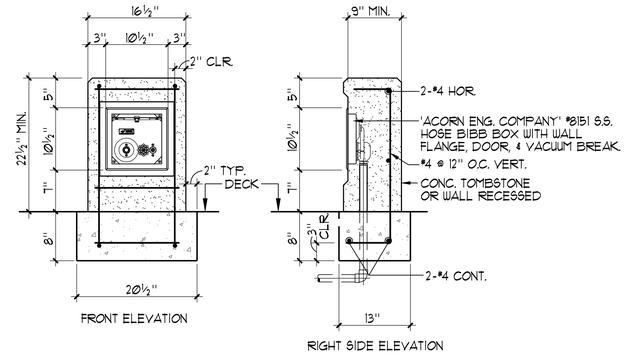

NOTE:
PROVIDE ¾" CHAMFER ON ALL CONCRETE CORNERS, SACK & PATCH ALL EXPOSED SURFACES.

2 HOSE BIBB 1"=1'-0"

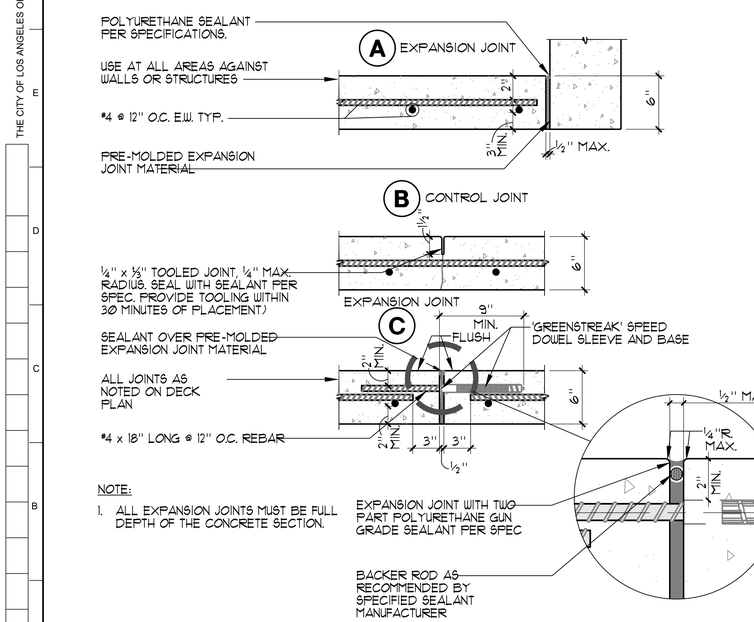

NOTE:
1. ALL EXPANSION JOINTS MUST BE FULL DEPTH OF THE CONCRETE SECTION.

3 CONCRETE DECK JOINT DETAILS 1½"=1'-0"

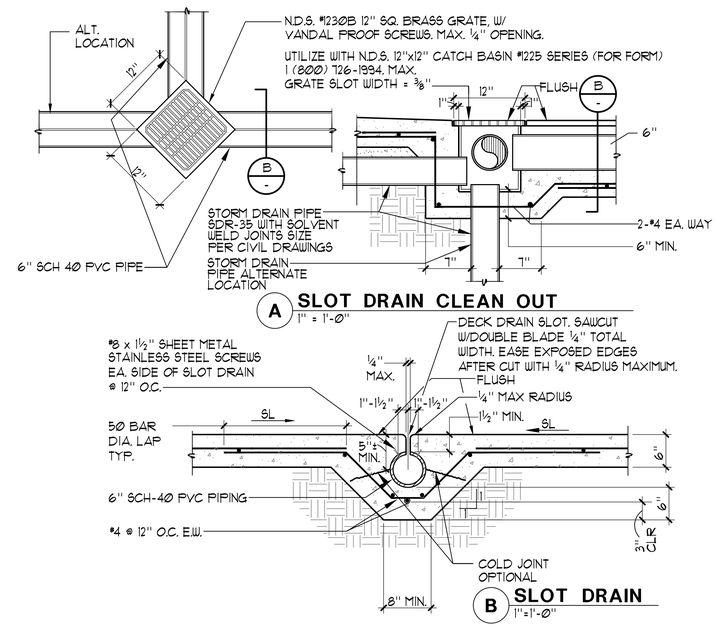

4 SLOT DRAIN 1"=1'-0"

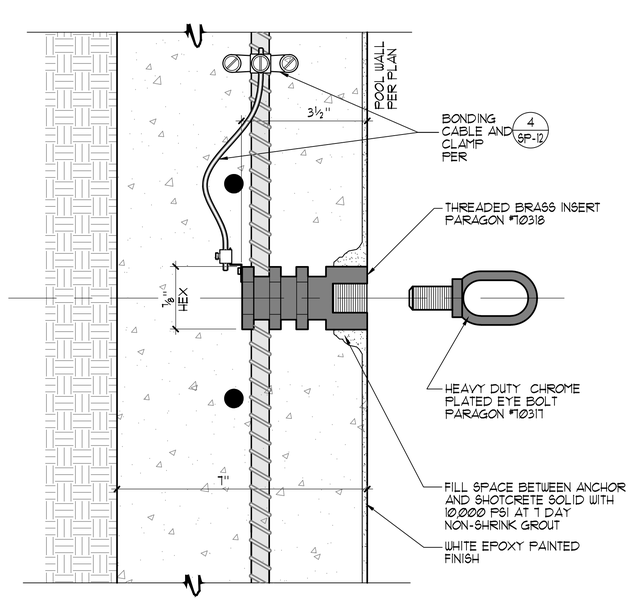

5 ROPE ANCHOR ½" = 1"

AQUATIC DESIGN GROUP
2220 Faraday Ave, Carlsbad, CA 92008
AquaticDesignGroup.com
760-438-2400

BUREAU OF ENGINEERING
OFFICIAL RECORD

ENGINEERING
CITY OF LOS ANGELES

NO.	REVISION DESCRIPTION	DATE	BY

BUILDING NO. -

INDEX NO. RP-300118

LICENSED ARCHITECT FOREST E. SILVA STATE OF CALIFORNIA C-28222 RENEWAL 08/31/21

DEPARTMENT OF PUBLIC WORKS
BUREAU OF ENGINEERING
CITY OF LOS ANGELES

CITY ENGINEER
DATE:
VERTICAL CONTROL:
HORIZONTAL CONTROL:
SHEET TITLE: DETAILS

GARY LEE MOORE, PE, ENV SP
ARCHITECTURAL DIVISION
LIC. NO.: C-28222

ARCHITECT/ENGINEER:	SJF	12/01/2019
DESIGNED BY:	SJF	12/01/2019
DRAWN BY:	GSF	12/01/2019
CHECKED BY:	SJF	12/01/2019
APPROVED BY:	SJF	12/01/2019

PROJECT: GRANADA HILLS POOL AND BATHHOUSE REPLACEMENT PROJECT
ADDRESS: 16730 CHATSWORTH STREET GRANADA HILLS, CA 91344

WORK ORDER NO. #E170517
PLAN FILE NO.
DRAWING NO. SP-14
SHEET O F SHEETS

BID SET
PROJECT ISSUE DATE: 06/22/21.

PLOTTED: 6/26/2018 2:53:10 PM

THE CITY OF LOS ANGELES OR ITS OFFICERS OR AGENTS SHALL NOT BE RESPONSIBLE FOR THE ACCURACY OR COMPLETENESS OF ELECTRONIC COPIES OF THIS PLAN SHEET.

TTLB TEMPLATE REVISION DATE: 02/2013
SHEET ISSUE DATE: 12/01/19
FILE PATH: BIM 360://Granada Hills Pool Renovation/A_Granada-Hills_2017.rvt

REVISION DATES (DESIGN STAGE ONLY)

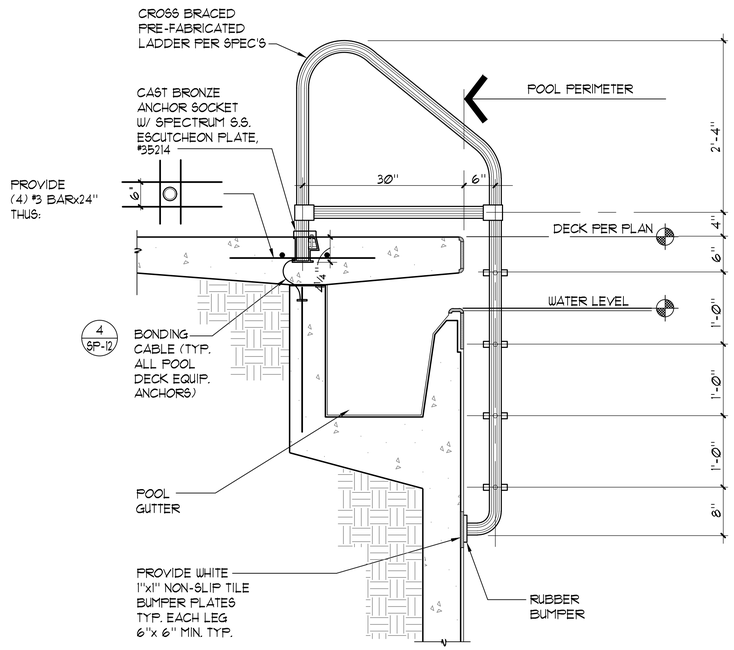

1 **POOL LADDER** 1"=1'-0"

AQUATIC DESIGN GROUP
2224 Faraday Ave. Carlsbad, CA 92008
AquaticDesignGroup.com
760.438.8400

BUREAU OF ENGINEERING
CITY OF LOS ANGELES

NO.	REVISION DESCRIPTION	DATE	BY

INDEX NO. RP-300118

BUILDING NO. -

LICENSED ARCHITECT
SCOTT J. FERRELL
C-26222
REN. 12/31/21
STATE OF CALIFORNIA

DEPARTMENT OF PUBLIC WORKS

GARY LEE MOORE, PE, ENV SP
CITY ENGINEER

		DATE:
ARCHITECTURAL DIVISION		
ARCHITECT/ENGINEER: SJF	LIC. NO.: C-26222	12/01/2019
DESIGNED BY: SJF		12/01/2019
DRAWN BY: GSF		12/01/2019
CHECKED BY: SJF		12/01/2019
APPROVED BY: SJF		12/01/2019

VERTICAL CONTROL:
HORIZONTAL CONTROL:

SHEET TITLE: DETAILS

PROJECT: GRANADA HILLS POOL AND BATHHOUSE REPLACEMENT PROJECT

ADDRESS: 16730 CHATSWORTH STREET GRANADA HILLS, CA 91344

BUREAU OF ENGINEERING
OFFICIAL RECORD

BID SET
PROJECT ISSUE DATE:06/22/21.

CITY OF LOS ANGELES

WORK ORDER NO. #E170517

PLAN FILE NO.

DRAWING NO. SP-15

SHEET OF SHEETS

PLOTTED:6/26/2018 2:53:10 PM

THE CITY OF LOS ANGELES OR ITS OFFICERS OR AGENTS SHALL NOT BE RESPONSIBLE FOR THE ACCURACY OR COMPLETENESS OF ELECTRONIC COPIES OF THIS PLAN SHEET.

TTLB TEMPLATE REVISION DATE: 02/2013
SHEET ISSUE DATE: 12/01/19
FILE PATH: BIM 360://Granada Hills Pool Renovation/A_Granada-Hills_2017.rvt

REVISION DATES (DESIGN STAGE ONLY)

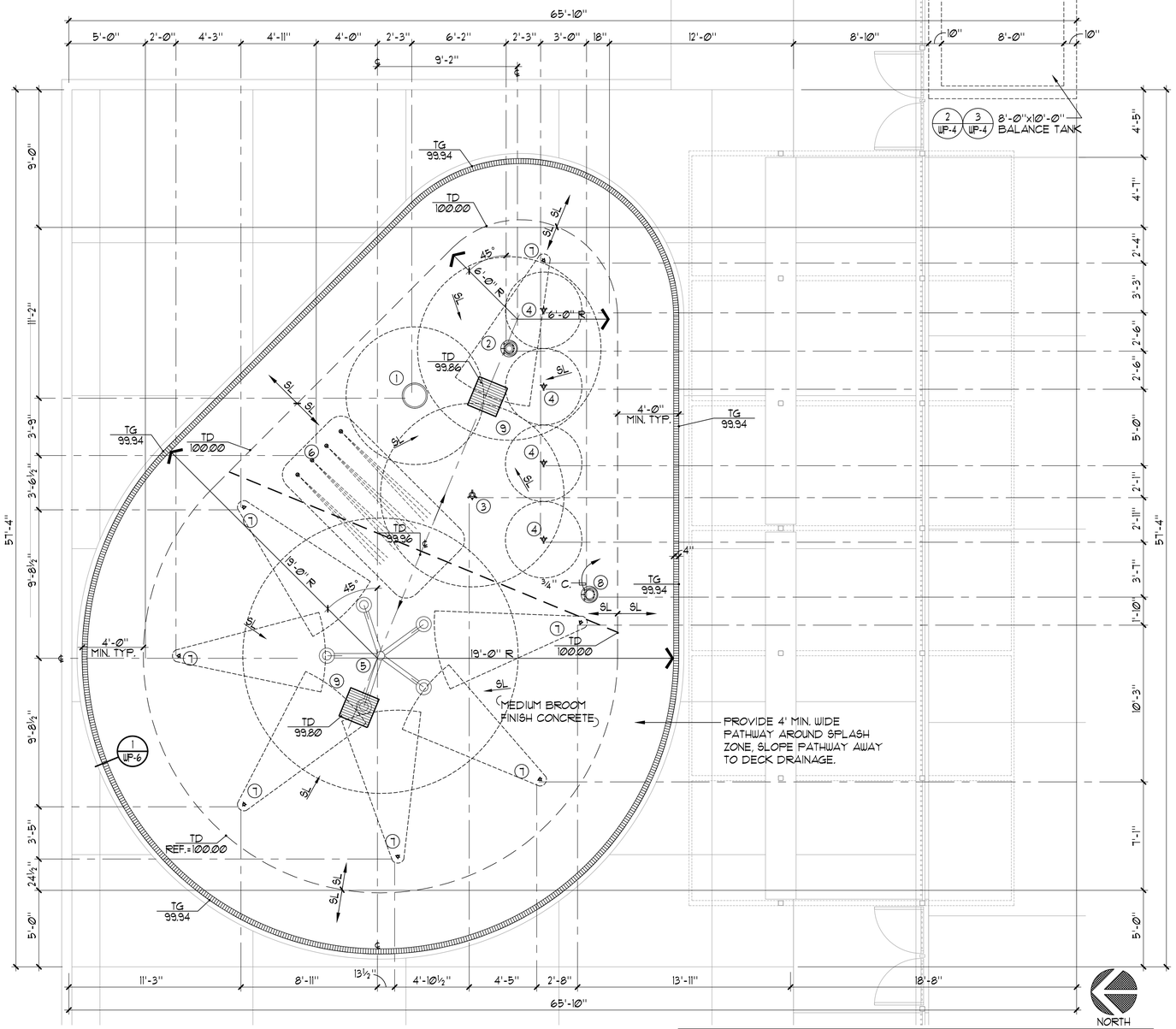

NOTE:
SEE CIVIL PLANS FOR DECK ELEVATIONS AND CONCRETE LAYOUT/ JOINTS PLAN.



NOTE:
CONTRACTOR SHALL SUBMIT SHOP DRAWINGS ON SIGNAGE DESIGN AND MOUNTING DETAIL. COORDINATE SIGNAGE LOCATION WITH LOCAL HEALTH DEPARTMENT OFFICIAL. SIGNAGE SHOULD BE MOUNTED AT A HEIGHT TO BE VISIBLE TO ALL USERS.

WET PLAY SIGNAGE DETAIL

1"=1'-0"

PRODUCT LEGEND

	PRODUCT CODE	QTY	TOTAL FLOW	
1	WATERBUG N°2 'VORTEX' VØR-7581	1	13 GPM	2 WP-3
2	AQUA DOME N°1 'VORTEX' VØR-555	1	14 GPM	3 WP-3
3	SIDE WINDER 'VORTEX' VØR-7518	1	15 GPM	4 WP-3
4	JET STREAM 'VORTEX' VØR-7512	4	12 GPM	5 WP-3
5	FUMBLING FIVE 'VORTEX' VØR-7384	1	12 GPM	6 WP-3
6	WATER TUNNEL N°2 'VORTEX' VØR-309	1	12 GPM	7 WP-3
7	SPLIT STREAM 'VORTEX' VØR-7516	7	55 GPM	8 WP-3
8	BOLLARD ACTIVATOR N°3 'VORTEX' VØR-0611	1	TOTAL FLOW 133 GPM	9 WP-3
9	MAINTENANCE MINIMIZER 'WATER ODYSSEY' WMM600	2	TOTAL FLOW 133 GPM	1 WP-4

LEGEND

MH = BALANCE TANK MANHOLE (2 WP-4 / 1 WP-6)
TG = TOP OF GRATE
TD = TOP OF DECK
HP = HIGH POINT
LP = LOW POINT
REF. = REFERENCE ELEVATION
SL = SLOPE DIRECTION

WET PLAY DATA

SURFACE AREA	=	1,003 SQ. FT.
VOLUME	=	4,194 GAL.
30 MIN. TURNOVER	=	140 GPM

WET PLAY BALANCE TANK DATA

BOOSTER PUMP RATE	=	133 GPM
CIRCULATION PUMP RATE	=	140 GPM
TOTAL WATER FLOW	=	273 GPM
273 GPM x 3	=	819 GAL.
8'-0" x 10'-0" SURGE CHAMBER	=	4194 GAL.

∴ 4,194 GAL. > 819 GAL. OK

SPECIAL REQUIREMENTS FOR SPRAY GROUNDS (2016 CBC 3106B)

1. ALL PARTS OF THE SPRAY GROUND SHALL BE DESIGNED AND CONSTRUCTED SO THAT THERE ARE NO SAFETY HAZARDS.
2. WALKING SURFACE: A MINIMUM 4-FOOT WIDE WALKING SURFACE SHALL EXTEND AROUND THE PERIMETER OF THE SPLASH ZONE OF A SPRAY GROUND.
3. THE RECIRCULATION SYSTEM SHALL BE IN OPERATION AT ALL TIMES THAT THE SPRAY GROUND IS OPEN FOR USE AND SHALL HAVE A MINIMUM OF FOUR TURNOVER CYCLES PRIOR TO OPENING FOR PROPER DISINFECTION AND FILTRATION.
4. THERE SHALL BE NO STANDING WATER WITHIN THE SPLASH ZONE.
5. NOZZLES THAT SPRAY FROM THE GROUND LEVEL SHALL BE FLUSH WITH THE GROUND WITH OPENINGS NO GREATER THAN ½ INCH. SPRAY GROUND WATER FEATURES THAT EXTEND ABOVE THE GROUND MUST BE CLEARLY VISIBLE.
6. THE SPLASH ZONE SHALL BE SLOPED SO THAT ONLY WATER FROM THE SPRAY GROUND WATER FEATURE FLOWS BACK TO THE SURGE BASIN. AREAS ADJACENT TO THE SPLASH ZONE SHALL BE SLOPED AWAY FROM THE SPRAY GROUND TO DECK DRAINS OR OTHER SURFACE WATER DISPOSAL SYSTEMS.
7. ALL FOGGERS AND MISTERS THAT PRODUCE FINELY ATOMIZED MISTS SHALL BE SUPPLIED DIRECTLY FROM A POTABLE WATER SOURCE AND NOT FROM THE SURGE BASIN.
8. WHEN MULTIPLE PUMPS ARE USED THE CONTROL SYSTEMS FOR THE SPRAY GROUND WATER FEATURE PUMP AND RECIRCULATION SYSTEM PUMP SHALL BE ELECTRICALLY INTERCONNECTED SO THAT WHEN THE RECIRCULATION PUMP IS OFF THE SPRAY GROUND WATER FEATURE PUMP ALSO IS OFF.
9. THE SPRAY GROUND SHALL HAVE A SURGE BASIN OR TREATMENT TANK CONSTRUCTED OF MATERIALS WHICH ARE INERT, CORROSION RESISTANT, NONTOXIC AND WATERTIGHT INCLUDING MATERIALS SUCH AS CONCRETE, FIBERGLASS, HIGH DENSITY POLYETHYLENE, STAINLESS STEEL OR OTHER MATERIALS AS APPROVED BY THE ENFORCING AGENT WHICH CAN WITHSTAND ALL ANTICIPATED LOADINGS UNDER FULL AND EMPTY CONDITIONS AS DETERMINED BY AN ENGINEER OR ARCHITECT WHO HAS EXPERIENCE WORKING ON PUBLIC POOLS.
10. THE TOTAL VOLUME OF THE SURGE BASIN SHALL BE AT LEAST 4,000 GALLONS OR A MINIMUM OF THREE TIMES THE GALLONS PER MINUTE FLOW RATE OF ALL THE SPRAY GROUND PUMPS AND THE RECIRCULATION PUMP COMBINED, WHICHEVER IS HIGHER.
11. THE TURNOVER TIME SHALL BE ONE-HALF HOUR OR LESS.
12. THE SUCTION INTAKE FOR THE SPRAY GROUND OR WATER FEATURE PUMP IN THE SURGE BASIN SHALL BE LOCATED ADJACENT TO THE RECIRCULATION RETURN LINE.
13. WHEN SEPARATE PUMPS ARE USED, THE SUCTION INTAKE FOR THE RECIRCULATION PUMP SHALL BE LOCATED IN THE LOWEST PORTION OF THE SURGE BASIN AND ON THE OPPOSITE SIDE FROM THE SUCTION INTAKE FOR THE SPRAY GROUND PUMP.
14. THE SURGE BASIN SHALL BE DESIGNED TO HAVE EASY ACCESS FOR CLEANING AND INSPECTION. THE BASIN SHALL HAVE AT LEAST ONE LADDER ACCESS AND SHALL HAVE AT LEAST ONE 3-FOOT BY 3-FOOT ACCESS OPENING. LIDS SHALL BE LOCKED OR REQUIRE A TOOL TO OPEN.
15. THE SURGE BASIN SHALL BE EQUIPPED WITH AN AUTOMATIC MAKE UP WATER FILL DEVICE THROUGH AN AIR GAP OR BE PROTECTED BY AN APPROVED BACKFLOW PREVENTION DEVICE IN ACCORDANCE WITH CHAPTER 6 OF THE CALIFORNIA PLUMBING CODE.
16. ULTRAVIOLET LIGHT DISINFECTION SHALL BE USED TO SUPPLEMENT DISINFECTION METHODS REQUIRED IN THIS CHAPTER UNLESS ANOTHER TREATMENT TREATMENT PROCESS IS PROVIDED THAT HAS BEEN DETERMINED BY A NATIONALLY RECOGNIZED TESTING LABORATORY TO BE CAPABLE OF PROVIDING AT LEAST THE EQUIVALENT LEVEL OF REDUCTION OF CRYPTOSPORIDIUM AS THE ULTRAVIOLET LIGHT DISINFECTION SYSTEM SPECIFIED IN THIS SECTION. THE ULTRAVIOLET DISINFECTION UNIT SHALL COMPLY WITH THE APPLICABLE REQUIREMENTS ESTABLISHED BY THE NSF/ANSI 50-2010 PERFORMANCE STANDARD EFFECTIVE AUGUST 2010.
17. AN ACCURATELY CALIBRATED ULTRAVIOLET LIGHT INTENSITY METER THAT HAS BEEN PROPERLY FILTERED TO RESTRICT ITS SENSITIVITY TO THE DISINFECTION SPECTRUM SHALL BE INSTALLED IN THE WALL OF THE DISINFECTION CHAMBER AT THE POINT OF GREATEST WATER DEPTH FROM THE LIGHT SOURCE.
18. THE ULTRAVIOLET LIGHT UNIT SHALL BE LOCATED ON THE RECIRCULATION SYSTEM AND SHALL BE INSTALLED TO PROVIDE TREATED WATER DIRECTLY TO THE SPRAY FEATURES.
19. THE ULTRAVIOLET LIGHT DISINFECTION SYSTEM MUST BE EQUIPPED WITH AN AUTOMATIC SHUTDOWN SYSTEM THAT INACTIVATES THE WATER FEATURE PUMP IF THE ULTRAVIOLET DOSAGE RATE DROPS BELOW 40 mJ/cm^2.
20. ARTIFICIAL LIGHTING SHALL BE PROVIDED AT ALL SPRAY GROUND PADS WHICH ARE USED AT NIGHT OR WHICH DO NOT HAVE ADEQUATE NATURAL LIGHTING SO THAT ALL PORTIONS OF THE SPRAY PAD AND DECK MAY BE SEEN EASILY. LIGHTING THAT MAY BE EXPOSED TO THE FEATURE POOL WATER SHALL BE INSTALLED IN ACCORDANCE WITH THE MANUFACTURER'S SPECIFICATIONS AND THE CALIFORNIA ELECTRICAL CODE.
21. A MEANS OF DIVERTING RUNOFF FROM THE SPLASH ZONE SHALL BE INSTALLED ON THE SPRAY GROUND DRAINAGE PIPING BEFORE THE SURGE BASIN TO DIVERT WATER TO THE STORM DRAINAGE SYSTEM WHEN THE SPRAY GROUND IS NOT IN OPERATION.
22. A REMOVABLE AND CLEANABLE CATCH SCREEN OR BASKET SHALL BE INSTALLED ON THE SPRAY GROUND DRAINAGE SYSTEM BEFORE IT ENTERS THE RESERVOIR TO PREVENT LARGER DEBRIS FROM COLLECTING IN THE SURGE BASIN.
23. EACH SPRAY GROUND MUST BE PROVIDED WITH ONE OR MORE SIGNS STATING:

CAUTION:
WATER IS RECIRCULATED
DO NOT DRINK

4" LETTERING MUST BE PROVIDED. SIGNS MUST BE VISIBLE FROM ANY PART OF THE SPRAY GROUND.

BUREAU OF ENGINEERING — OFFICIAL RECORD

WET PLAY LAYOUT PLAN

1 — ¼"=1'-0"

AQUATIC DESIGN GROUP
2226 Faraday Ave, Carlsbad, CA 92008
AquaticDesignGroup.com
760-438-2400

CITY OF LOS ANGELES — DEPARTMENT OF PUBLIC WORKS — BUREAU OF ENGINEERING

ENGINEERING — CITY OF LOS ANGELES

NO.	REVISION DESCRIPTION	DATE	BY

BUILDING NO. -

INDEX NO. RP-300118

LICENSED ARCHITECT — GARY LEE MOORE — C-28222 — RENEWAL 08/31/21 — STATE OF CALIFORNIA

GARY LEE MOORE, PE, ENV SP

		LIC. NO.: C-28222
ARCHITECT/ENGINEER:	SJF	ARCHITECTURAL DIVISION
DESIGNED BY:	SJF	
DRAWN BY:	GSF	
CHECKED BY:	SJF	
APPROVED BY:	SJF	

CITY ENGINEER

	DATE:
	12/01/2019
	12/01/2019
	12/01/2019
	12/01/2019
	12/01/2019

CITY OF LOS ANGELES

VERTICAL CONTROL:
HORIZONTAL CONTROL:

SHEET TITLE: WET PLAY LAYOUT PLAN

PROJECT: GRANADA HILLS POOL AND BATHHOUSE REPLACEMENT PROJECT

ADDRESS: 16730 CHATSWORTH STREET GRANADA HILLS, CA 91344

BID SET
PROJECT ISSUE DATE:06/22/21

WORK ORDER NO. #E170517

PLAN FILE NO.

DRAWING NO. WP-1

SHEET O F SHEETS

PLOTTED: 6/26/2018 2:53:10 PM

THE CITY OF LOS ANGELES OR ITS OFFICERS OR AGENTS SHALL NOT BE RESPONSIBLE FOR THE ACCURACY OR COMPLETENESS OF ELECTRONIC COPIES OF THIS PLAN SHEET.

TTLB TEMPLATE REVISION DATE: 02/2013
SHEET ISSUE DATE: 12/01/19
FILE PATH: BIM 360://Granada Hills Pool Renovation/A_GranadaHills_2017.rvt

REVISION DATES: (DESIGN STAGE ONLY)

WET PLAY DATA

SURFACE AREA	=	1,003 SQ. FT.
VOLUME	=	4,194 GAL.
30 MIN. TURNOVER	=	140 GPM

LEGEND

MH	=	BALANCE TANK MANHOLE (2 / WP-4)
HP	=	HIGH POINT
LP	=	LOW POINT
TD	=	TOP OF DECK
TG	=	TOP OF GRATE
REF.	=	REFERENCE ELEVATION
AFF	=	ABOVE FINISHED FLOOR
SL	=	SLOPE DIRECTION

PRODUCT LEGEND

	PRODUCT CODE	QTY	TOTAL FLOW	
1	WATERBUG N°2 'VORTEX' VOR-7581	1	13 GPM	2 / WP-3
2	AQUA DOME N°1 'VORTEX' VOR-555	1	14 GPM	3 / WP-3
3	SIDE WINDER 'VORTEX' VOR-7518	1	15 GPM	4 / WP-3
4	JET STREAM 'VORTEX' VOR-7512	4	12 GPM	5 / WP-3
5	FUMBLING FIVE 'VORTEX' VOR-7384	1	12 GPM	6 / WP-3
6	WATER TUNNEL N°2 'VORTEX' VOR-309	1	12 GPM	7 / WP-3
7	SPLIT STREAM 'VORTEX' VOR-7516	7	55 GPM	8 / WP-3
8	BOLLARD ACTIVATOR N°3 'VORTEX' VOR-600	1		9 / WP-3
9	MAINTENANCE MINIMIZER 'WATER ODYSSEY' #MM600	2	TOTAL FLOW 133 GPM	1 / WP-4

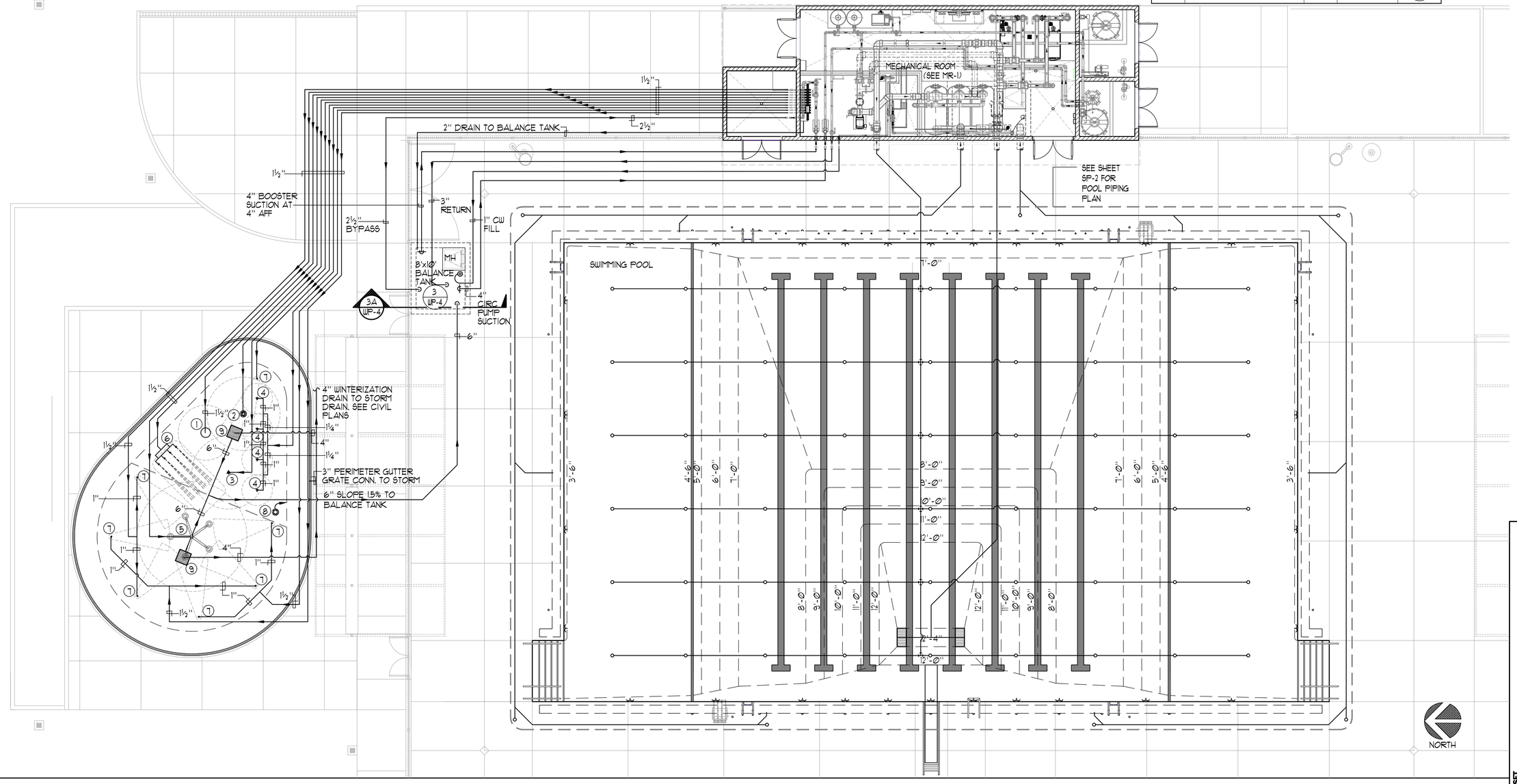

WET PLAY PIPING PLAN

1/8" = 1'-0"

THE CITY OF LOS ANGELES OR ITS OFFICERS OR AGENTS SHALL NOT BE RESPONSIBLE FOR THE ACCURACY OR COMPLETENESS OF ELECTRONIC COPIES OF THIS PLAN SHEET.

TTLB TEMPLATE REVISION DATE: 02/2013
SHEET ISSUE DATE: 12/01/19

FILE PATH: BIM 360://Granada Hills Pool Renovation/A_GranadaHills_2017.rvt

REVISION DATES (DESIGN STAGE ONLY)

BUREAU OF ENGINEERING — OFFICIAL RECORD

AQUATIC DESIGN GROUP
2228 Faraday Ave, Carlsbad, CA 92008
AquaticDesignGroup.com
760-438-2400

BUREAU OF ENGINEERING
ENGINEERING
CITY OF LOS ANGELES

NO.	REVISION DESCRIPTION	DATE	BY

BUILDING NO. -
INDEX NO. RP-300118

LICENSED ARCHITECT FOREIGN — C-28222 REN. 08/31/21 — STATE OF CALIFORNIA

DEPARTMENT OF PUBLIC WORKS
BUREAU OF ENGINEERING
CITY OF LOS ANGELES

GARY LEE MOORE, PE, ENV SP
CITY ENGINEER

		DATE:
ARCHITECTURAL DIVISION		
ARCHITECT/ENGINEER: SJF	LIC. NO.: C-28222	12/01/2019
DESIGNED BY: SJF		12/01/2019
DRAWN BY: GSF		12/01/2019
CHECKED BY: SJF		12/01/2019
APPROVED BY: SJF		12/01/2019

VERTICAL CONTROL:
HORIZONTAL CONTROL:

SHEET TITLE: WET PLAY PIPING PLAN

PROJECT: GRANADA HILLS POOL AND BATHHOUSE REPLACEMENT PROJECT

ADDRESS: 16730 CHATSWORTH STREET GRANADA HILLS, CA 91344

BID SET
PROJECT ISSUE DATE: 06/22/21

WORK ORDER NO. #E170517
PLAN FILE NO.
DRAWING NO. WP-2
SHEET NO. OF SHEETS

PLOTTED: 6/26/2018 2:53:10 PM

THE CITY OF LOS ANGELES OR ITS OFFICERS OR AGENTS SHALL NOT BE RESPONSIBLE FOR THE ACCURACY OR COMPLETENESS OF ELECTRONIC COPIES OF THIS PLAN SHEET.

TTLB TEMPLATE REVISION DATE: 02/2013
SHEET ISSUE DATE: 12/01/19
FILE PATH: BIM 360://Granada Hills Pool Renovation/A_Granada-Hills_2017.rvt

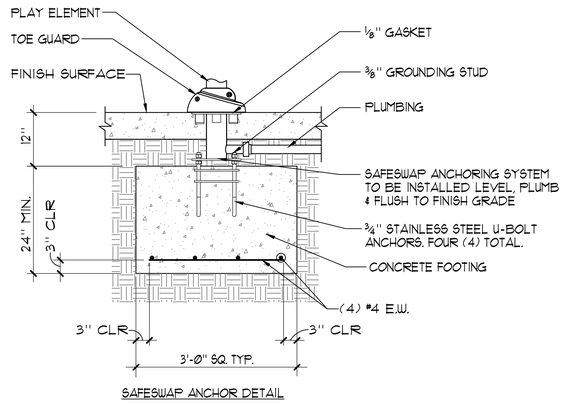

SAFESWAP ANCHOR DETAIL

1 SAFESWAP ANCHOR

1" = 1'-0"

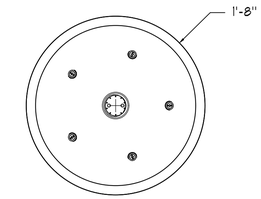

PLAN VIEW

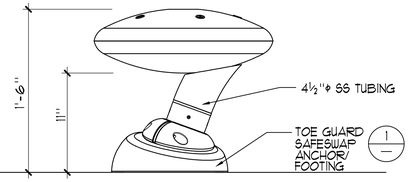

2 WATER BUG NO.2 DETAIL

NO SCALE

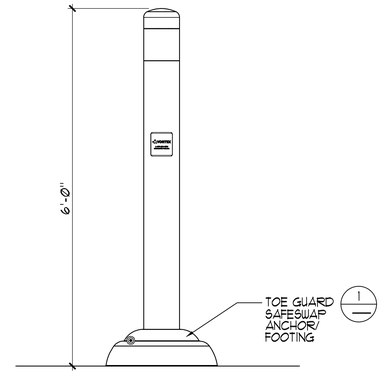

3 AQUA DOME NO.1 DETAIL

NO SCALE



PLAN VIEW

ELEVATION

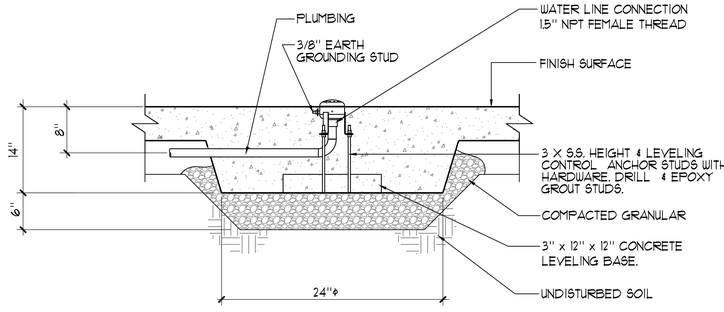

4 SIDE WINDER

NO SCALE

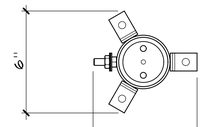

ELEVATION VIEW

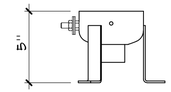

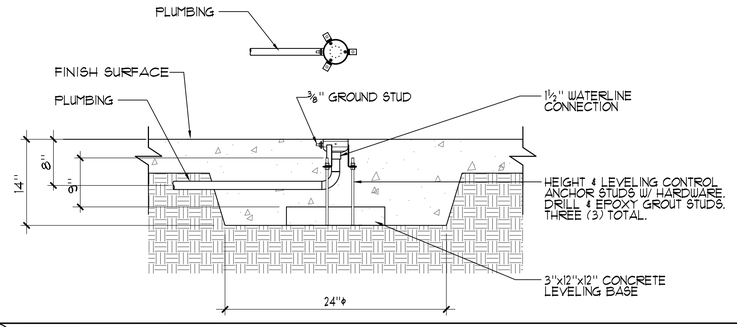

5 JET STREAM

NO SCALE

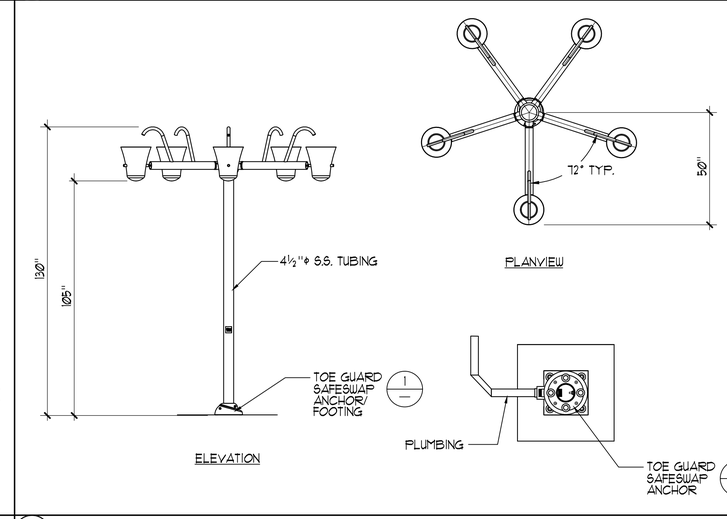

6 FUMBLING FIVE

NO SCALE

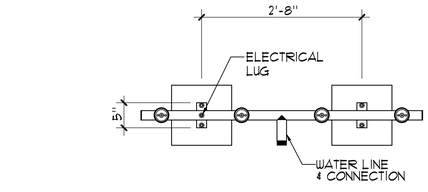

PLAN VIEW

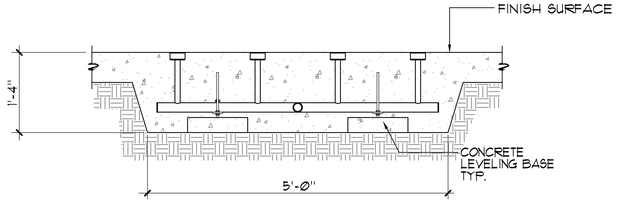

ELEVATION VIEW

7 WATER TUNNEL NO.2

NO SCALE

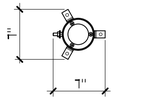

PLAN VIEW



ELEVATION

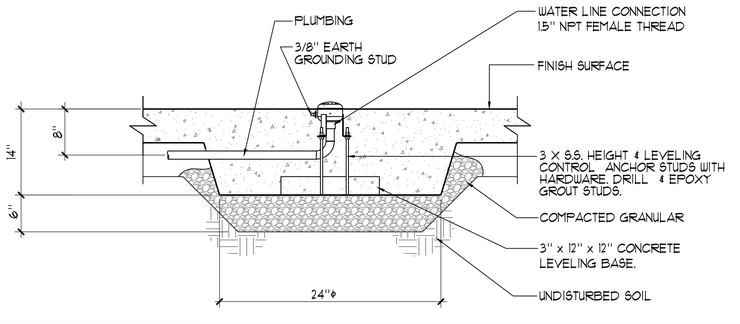

8 SPLIT STREAM

NO SCALE

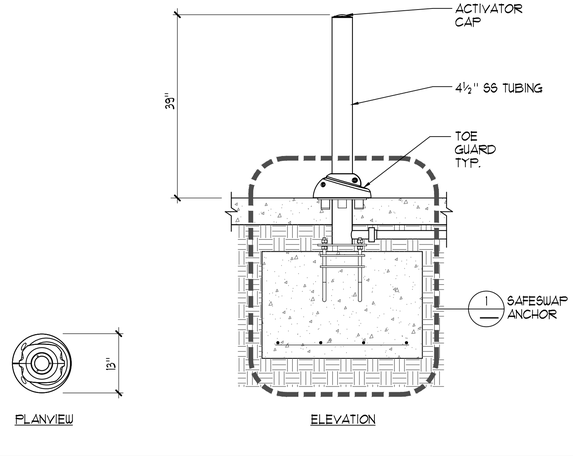

PLANVIEW

ELEVATION

9 BOLLARD ACTIVATOR NO.3

NO SCALE

REVISION DATES: (DESIGN STAGE ONLY)

BID SET
PROJECT ISSUE DATE: 06/22/21

CITY OF LOS ANGELES
DEPARTMENT OF PUBLIC WORKS
BUREAU OF ENGINEERING

AQUATIC DESIGN GROUP
2220 Faraday Ave, Carlsbad, CA 92008
AquaticDesignGroup.com
760-438-2400

ENGINEERING
CITY OF LOS ANGELES

NO.	REVISION DESCRIPTION	DATE	BY

BUILDING NO. -

INDEX NO. RP-300118

OFFICIAL RECORD

LICENSED ARCHITECT FOREST W. SIMS C-26222 REN. 08/31/21 STATE OF CALIFORNIA

CITY ENGINEER: GARY LEE MOORE, PE, ENV SP
DATE: 12/01/2019

ARCHITECT/ENGINEER: SJF — ARCHITECTURAL DIVISION — LIC. NO.: C-26222
DESIGNED BY: SJF — DATE: 12/01/2019
DRAWN BY: GSF — DATE: 12/01/2019
CHECKED BY: SJF — DATE: 12/01/2019
APPROVED BY: SJF — DATE: 12/01/2019

VERTICAL CONTROL:
HORIZONTAL CONTROL:

SHEET TITLE: WET PLAY DETAILS

PROJECT: GRANADA HILLS POOL AND BATHHOUSE REPLACEMENT PROJECT
ADDRESS: 16730 CHATSWORTH STREET GRANADA HILLS, CA 91344

WORK ORDER NO. #E170517
PLAN FILE NO.
DRAWING NO. WP-3
SHEET 0 OF SHEETS

PLOTTED: 6/26/2018 2:53:10 PM

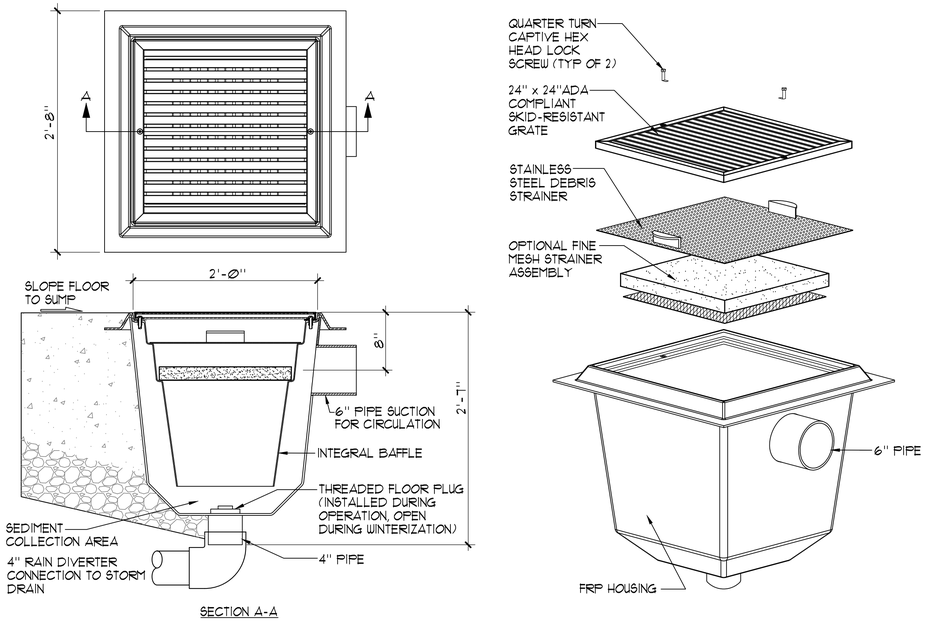

1 MAINTENANCE MINIMIZER

NO SCALE

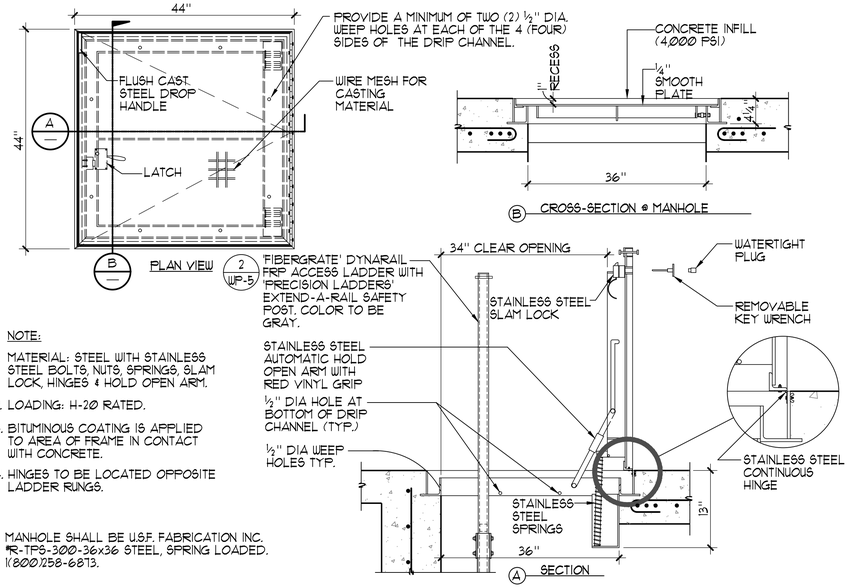

NOTE:

1. MATERIAL: STEEL WITH STAINLESS STEEL BOLTS, NUTS, SPRINGS, SLAM LOCK, HINGES & HOLD OPEN ARM.
2. LOADING: H-20 RATED.
3. BITUMINOUS COATING IS APPLIED TO AREA OF FRAME IN CONTACT WITH CONCRETE.
4. HINGES TO BE LOCATED OPPOSITE LADDER RUNGS.

MANHOLE SHALL BE U.S.F. FABRICATION INC. #R-TPS-300-36x36 STEEL, SPRING LOADED. 1(800)758-6873.

2 BALANCE TANK MANHOLE

1"=1'-Ø"

LEGEND

O.C. = ON CENTER
E.W. = EACH WAY
A.F.F. = ABOVE FINISH FLOOR

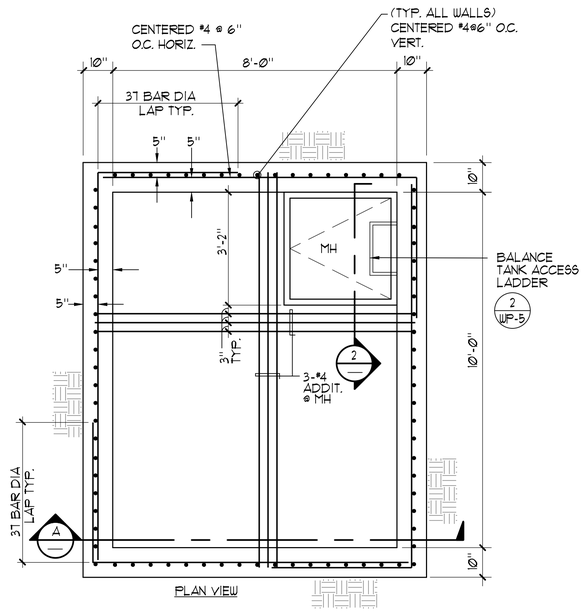

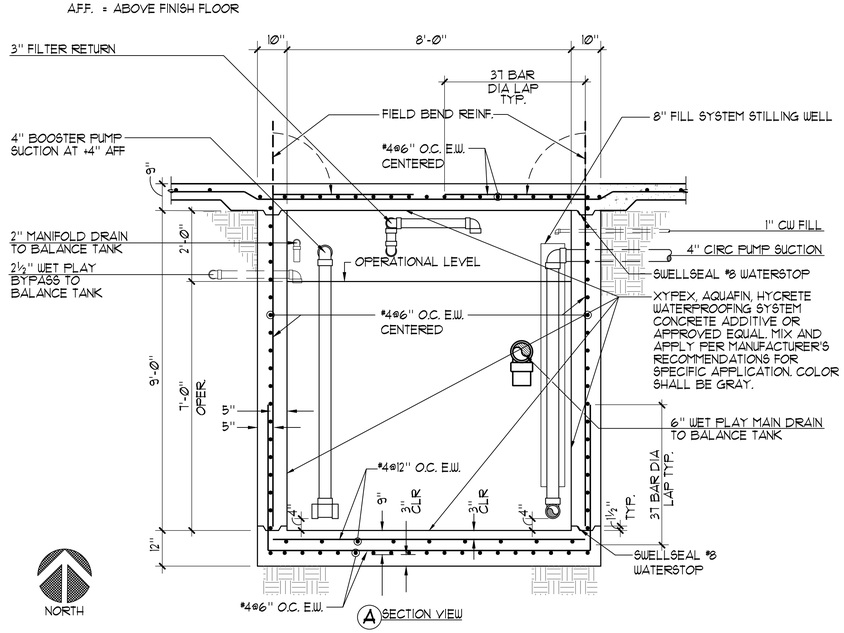

3 BALANCE TANK

½"=1'-Ø"

BUREAU OF ENGINEERING
OFFICIAL RECORD

AQUATIC DESIGN GROUP
2226 Faraday Ave, Carlsbad, CA 92008
AquaticDesignGroup.com
760-438-2400

ENGINEERING
CITY OF LOS ANGELES

NO.	REVISION DESCRIPTION	DATE	BY

BUILDING NO. -

INDEX NO. RP-300118

LICENSED ARCHITECT ROBERT J. SAMPLE C-28222 REN. 08/31/21 STATE OF CALIFORNIA

DEPARTMENT OF PUBLIC WORKS
CITY OF LOS ANGELES

GARY LEE MOORE, PE, ENV SP
CITY ENGINEER

ARCHITECT/ENGINEER:	SJF	LIC. NO.: C-28222
DESIGNED BY:	SJF	DATE: 12/01/2019
DRAWN BY:	GSF	12/01/2019
CHECKED BY:	SJF	12/01/2019
APPROVED BY:	SJF	12/01/2019

ARCHITECTURAL DIVISION

VERTICAL CONTROL:
HORIZONTAL CONTROL:

SHEET TITLE: WET PLAY DETAILS

PROJECT: GRANADA HILLS POOL AND BATHHOUSE REPLACEMENT PROJECT

ADDRESS: 16730 CHATSWORTH STREET GRANADA HILLS, CA 91344

BID SET
PROJECT ISSUE DATE: 06/22/21

WORK ORDER NO. #E170517

PLAN FILE NO.

DRAWING NO. WP-4

SHEET O F SHEETS

PLOTTED: 6/25/2018 2:53:10 PM

REVISION DATES (DESIGN STAGE ONLY)

THE CITY OF LOS ANGELES OR ITS OFFICERS OR AGENTS SHALL NOT BE RESPONSIBLE FOR THE ACCURACY OR COMPLETENESS OF ELECTRONIC COPIES OF THIS PLAN SHEET.

TTLB TEMPLATE REVISION DATE: 02/2013
SHEET ISSUE DATE: 12/01/19
FILE PATH: BIM 360://Granada Hills Pool Renovation/A_Granada-Hills_2017.rvt

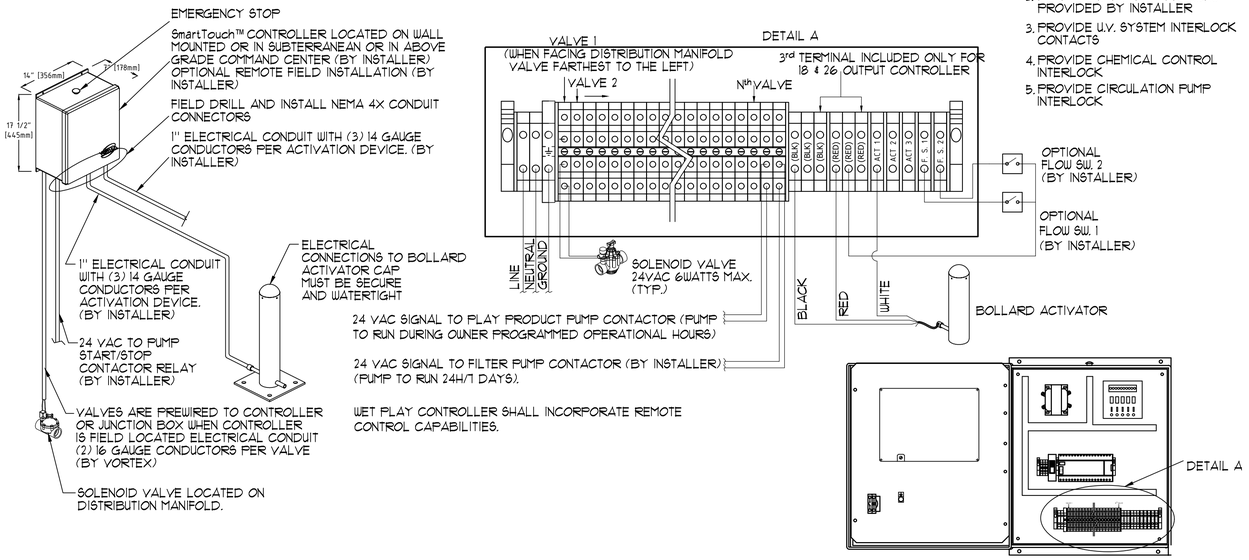

NOTE:
1. A COMMON NEUTRAL MAY BE USED FOR UP TO TEN ELECTRIC VALVES.
2. PUMPS AND PUMP INTERFACES PROVIDED BY INSTALLER
3. PROVIDE U.V. SYSTEM INTERLOCK CONTACTS
4. PROVIDE CHEMICAL CONTROL INTERLOCK
5. PROVIDE CIRCULATION PUMP INTERLOCK

1 SMART TOUCH CONTROLLER INSTALLATION DETAIL

NO SCALE

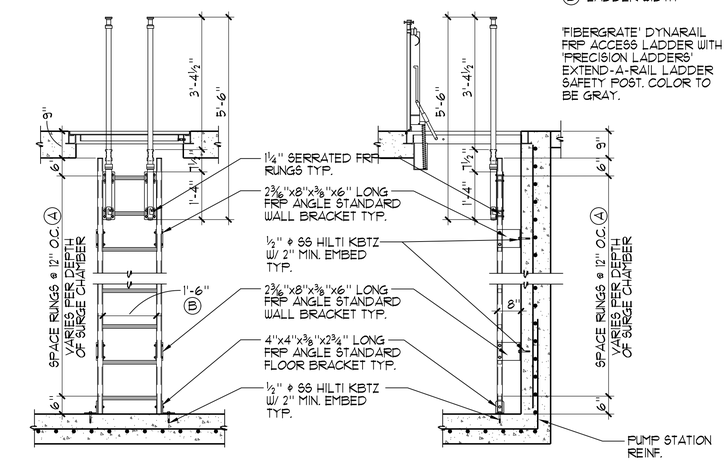

1 FRONT ELEVATION

2 SIDE ELEVATION

2 BALANCE TANK ACCESS LADDER

½"=1'-0"

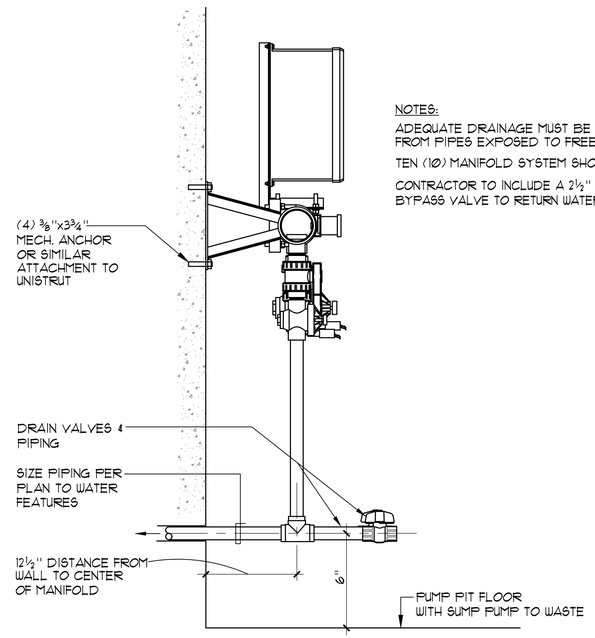

NOTES:

ADEQUATE DRAINAGE MUST BE PROVIDED TO REMOVE WATER FROM PIPES EXPOSED TO FREEZING TEMPERATURES.

TEN (10) MANIFOLD SYSTEM SHOWN

CONTRACTOR TO INCLUDE A 2½" PRESSURE SUSTAINING BYPASS VALVE TO RETURN WATER TO BALANCE TANK

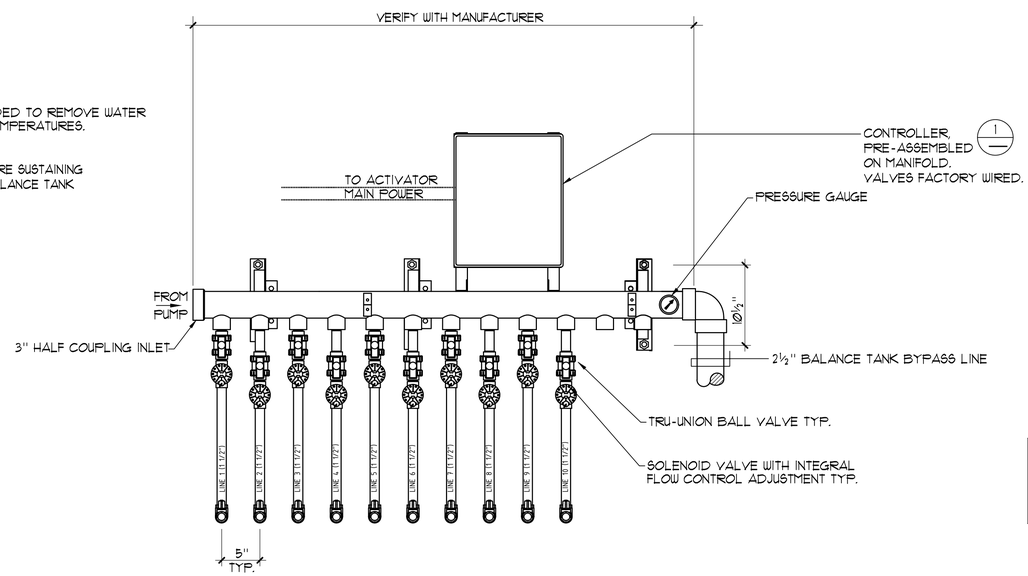

BUREAU OF ENGINEERING
OFFICIAL RECORD

3 WALL MOUNTED COMMAND CENTER MANIFOLD

NO SCALE

THE CITY OF LOS ANGELES OR ITS OFFICERS OR AGENTS SHALL NOT BE RESPONSIBLE FOR THE ACCURACY OR COMPLETENESS OF ELECTRONIC COPIES OF THIS PLAN SHEET.

TTLB TEMPLATE REVISION DATE: 02/2013
SHEET ISSUE DATE: 12/01/19
FILE PATH: BIM 360://Granada Hills Pool Renovation/A_Granada-Hills_2017.rvt

REVISION DATES (DESIGN STAGE ONLY)

AQUATIC DESIGN GROUP
2228 Faraday Ave, Carlsbad, CA 92008
AquaticDesignGroup.com
760-438-2400

ENGINEERING
CITY OF LOS ANGELES

NO.	REVISION DESCRIPTION	DATE	BY

BUILDING NO. -

INDEX NO. RP-300118

LICENSED ARCHITECT FOREST C-26222 REN. 08/31/21 STATE OF CALIFORNIA

DEPARTMENT OF PUBLIC WORKS
BUREAU OF ENGINEERING
CITY OF LOS ANGELES

GARY LEE MOORE, PE, ENV SP
CITY ENGINEER

ARCHITECT/ENGINEER:	SJF	LIC. NO.: C-26222
DESIGNED BY:	SJF	DATE: 12/01/2019
DRAWN BY:	GSF	12/01/2019
CHECKED BY:	SJF	12/01/2019
APPROVED BY:	SJF	12/01/2019

ARCHITECTURAL DIVISION

VERTICAL CONTROL:
HORIZONTAL CONTROL:

SHEET TITLE: WET PLAY DETAILS

PROJECT: GRANADA HILLS POOL AND BATHHOUSE REPLACEMENT PROJECT

ADDRESS: 16730 CHATSWORTH STREET GRANADA HILLS, CA 91344

BID SET
PROJECT ISSUE DATE: 06/22/21

WORK ORDER NO. #E170517

PLAN FILE NO.

DRAWING NO. WP-5

SHEET O F SHEETS

PLOTTED: 6/25/2018 2:53:10 PM

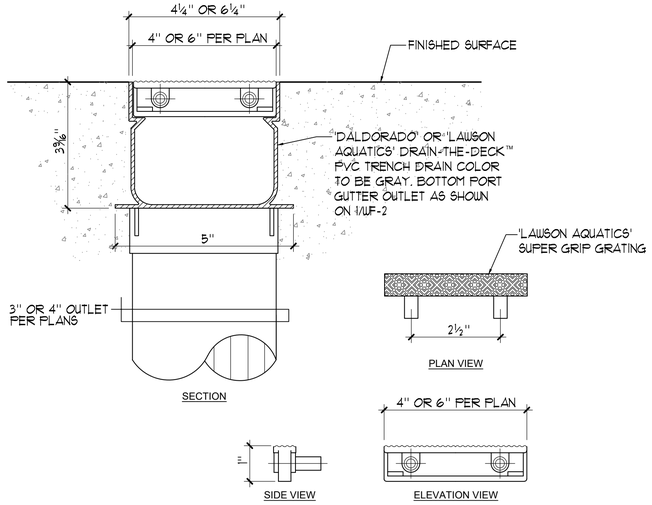

1 **PERIMETER TRENCH DRAIN DETAIL** 6"=1'-0"

LEGEND

1. COMBINATION MAG. STARTER
2. CIRCULATION PUMP
3. WATER CHEMISTRY CONTROLLER
4. CHLORINE FEED SYSTEM
5. ACID FEED SYSTEM
6. UV CONTROL PANEL
7. HEATER 'FIREMAN SWITCH'

NOTES:

1. INSTALL 1 #12 GROUND CONDUCTOR IN ALL CONDUITS
2. ALL CONDUITS SHALL BE RIGID OR INTERMEDIATE GALVANIZED METAL.
3. REFER TO FILTER 'OWNER'S MANUAL' FOR INSTALLATION/ OPERATING INSTRUCTIONS. CONTRACTOR SHALL BE RESPONSIBLE FOR A FULLY OPERATIONAL SYSTEM.
4. ALL WORK SHALL BE IN ACCORDANCE WITH 2019 C.E.C. FURNISH ALL LABOR, MATERIALS AND COORDINATION OF WORK HERE ON SHOWN/IMPLIED.
5. THE UV LIGHT DISINFECTION SYSTEM MUST BE EQUIPPED WITH AN AUTOMATIC SHUTDOWN SYSTEM THAT INACTIVATES THE WATER FEATURE PUMP IF THE UV DOSAGE RATE DROPS BELOW 40 mJ/cm².
6. AUTOMATIC DISINFECTANT FEEDERS AND FILTRATION PUMP SHALL BE INTERLOCKED SO THAT WHEN FILTRATION PUMP SHUTS OFF THE WHOLE SYSTEM SHUTS DOWN.

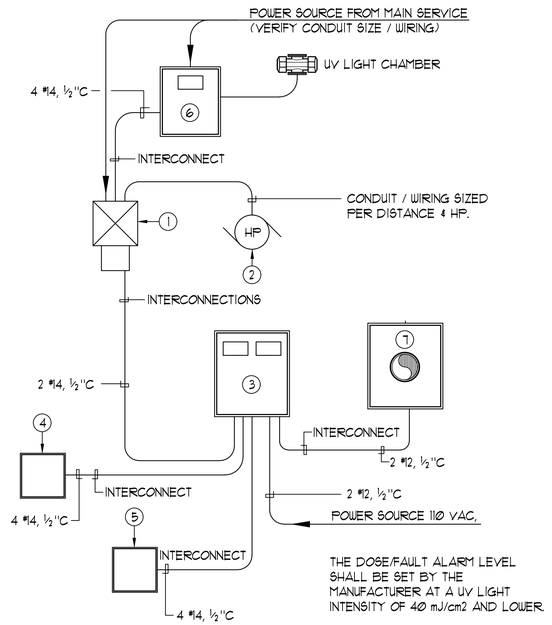

THE DOSE/FAULT ALARM LEVEL SHALL BE SET BY THE MANUFACTURER AT A UV LIGHT INTENSITY OF 40 mJ/cm2 AND LOWER.

2 **WET PLAY ELECTRICAL INTERCONNECTION SINGLE LINE DIAGRAM** NO SCALE

BUREAU OF ENGINEERING OFFICIAL RECORD

BID SET
PROJECT ISSUE DATE:06/22/21.

CITY OF LOS ANGELES DEPARTMENT OF PUBLIC WORKS BUREAU OF ENGINEERING

AQUATIC DESIGN GROUP
2234 Faraday Ave. Carlsbad, CA 92008
AquaticDesignGroup.com
760.438.8400

ENGINEERING CITY OF LOS ANGELES

NO.	REVISION DESCRIPTION	DATE	BY

INDEX NO. RP-300118

BUILDING NO. -

LICENSED ARCHITECT SCOTT J. FERRELL C-26222 REN. 12/31/21 STATE OF CALIFORNIA

GARY LEE MOORE, PE, ENV SP
ARCHITECTURAL DIVISION
CITY ENGINEER

		DATE:
ARCHITECT/ENGINEER:	SJF	12/01/2019
DESIGNED BY:	SJF	12/01/2019
DRAWN BY:	GSF	12/01/2019
CHECKED BY:	SJF	12/01/2019
APPROVED BY:	SJF	12/01/2019

VERTICAL CONTROL:
HORIZONTAL CONTROL:

SHEET TITLE: WET PLAY DETAILS

PROJECT: GRANADA HILLS POOL AND BATHHOUSE REPLACEMENT PROJECT

ADDRESS: 16730 CHATSWORTH STREET GRANADA HILLS, CA 91344

WORK ORDER NO. #E170517

PLAN FILE NO.

DRAWING NO. WP-6

SHEET OF SHEETS

PLOTTED: 6/26/2018 2:53:10 PM

THE CITY OF LOS ANGELES OR ITS OFFICERS OR AGENTS SHALL NOT BE RESPONSIBLE FOR THE ACCURACY OR COMPLETENESS OF ELECTRONIC COPIES OF THIS PLAN SHEET.

TTLB TEMPLATE REVISION DATE: 02/2013
SHEET ISSUE DATE: 12/01/19
FILE PATH: BIM 360://Granada Hills Pool Renovation/A_Granada-Hills_2017.rvt

REVISION DATES (DESIGN STAGE ONLY)

EQUIPMENT LIST

1. SWIMMING POOL STRAINER: 'MER-MADE' F.O. SERIES FRP REDUCING BASKET STRAINER: ONE (1) 10"x8" STANDARD, WITH ACRYLIC LID AND TWO (2) STAINLESS STEEL STRAINERS EA. (150lbs.)
2. (1 MR-2) (3-4 MR-1) SWIMMING POOL CIRCULATION PUMP: 'PACO' #6015-7; 6"x8"x15" TYPE 'LC' END SUCTION CENTRIFUGAL PUMP; 1150 RPM 460V, 3PH; 30HP; RATED AT 1,215 GPM @ 60 FT. TDH; 85% EFFICIENT; PREMIUM EFFICIENCY TEFC MOTOR; EPOXY COAT ALL WET SURFACES. 'PACO', 'AURORA' OR EQUAL. (760 lbs.) PROVIDE 'PENTAIR ACCUDRIVE PUMP CONTROL SYSTEM VARIABLE SPEED DRIVE MODEL #AD300-46G3-N12FB WITH FULL BYPASS MODE AND 4-20mA FLOW METER KIT 91016-420KIT AND EXTENDED WARRANTY AD-EWW212 . COORDINATE MOUNTING LOCATION TO MAINTAIN DESIRED CLEARANCES, 460V 3PH. (122 lbs.)
3. (4 MR-2) (1 MR-6) (2 MR-1) SWIMMING POOL FILTERS: 'STARK' S63-96-10 AUTOMATIC FILTER CONTROL (AFC) FULLY AUTOMATIC HI-RATE PERMANENT MEDIA FILTER WITH 81 SQ. FT. OF FILTER AREA RATED AT 1,296 GPM AT 16 GPM/SQ. FT. COMPLETE WITH 10" FACE PIPING, 6" BACKWASH, SEISMIC ANCHORAGE. PROVIDE ALL UTILITIES, PIPING, VALVING, ETC. (9,800 lbs EA. TANK) 'STARK', OR EQUAL. PROVIDE SIGNET MK-515 FLOSENSOR WITH DIGITAL READ-OUT.
4. (5 MR-2) (1 MR-6) SWIMMING POOL HEATER: INDIRECT FIRED POOL HEATING PACKAGE SYSTEM; 'AQUA5' WITH SMARTTOUCH CONTROL CONDENSING MODULATING BOILER, TITANIUM HEAT EXCHANGER WITH CPVC CONNECTIONS, FACTORY ASSEMBLED SKID MOUNTED PACKAGE, CALIFORNIA CODE CONTROLS, 1 1/2" NATURAL GAS CONNECTION, 4" WATER CONNECTIONS, 6" DIAMETER AIR INLET AND 6" DIAMETER SIDEWALL VENT SIZE, PVC VENTED, 1,449,877 BTU PER HOUR INPUT, 91% EFFICIENT, 'LOCHINVAR' #AFN1500, WEIGHT = 3,500 lbs. EA. TWO (2) TOTAL.
5. (2 MR-2) (1 MR-6) WET PLAY CIRCULATION PUMP: 'PENTAIR' XFK-12 WHISPERFLO XF PUMP; 3,450 RPM, 3HP; 208V, 3PH; SELF PRIMING PUMP WITH INTEGRAL STRAINER RATED AT 155 GPM AT 60FT. TDH. ONE (1) TOTAL (58lbs). COMPLETE WITH TIME CLOCK SYSTEM. INTERCONNECT CIRCULATION PUMP WITH BOOSTER PUMPS TO ONLY ALLOW BOOSTER PUMP OPERATION WHEN CIRCULATION SYSTEM IS ON.
6. (2 MR-2) WET PLAY BOOSTER PUMP: 'PENTAIR' XFK-8 WHISPERFLO XF PUMP; 3450 RPM, 2HP; 208-230V/460V, 3PH; WITH INTEGRAL STRAINER RATED AT 135 GPM AT 50 FT. TDH. INTERCONNECT WITH WATER FEATURE CIRCULATION PUMP. (FIELD VERIFY MOTOR VOLTAGE PRIOR TO ORDERING.) (58lbs.) PROVIDE MOTOR STARTER/DISCONNECT.
7. (3 MR-2) (2 MR-6) WET PLAY FILTERS:'PENTAIR' TR100-C-3 HI-RATE PERMANENT MEDIA FILTERS WITH 9.82 SQ. FT. OF FILTER AREA; RATED AT 157 GPM AT 16 GPM/SQ. FT. COMPLETE WITH 3" MANIFOLD, 2" MULTIPORT BACKWASH AND SEISMIC ANCHORAGE. PROVIDE ALL UTILITIES, PIPING, VALVING, ETC. TWO (2) TANKS TOTAL. (1000lbs. EA. TANK)
8. (6 MR-2) (1 MR-6) WET PLAY HEATER: 'RAYPAK' MODEL #DIGITAL 331; 332,000 BTU INPUT, 3/4" NATURAL GAS CONNECTION, 2" WATER INFLUENT/EFFLUENT CONNECTIONS CUPRO NICKEL HEAT EXCHANGER ASME KIT AND 5" DIRECT AIR INTAKE AND 6" EXHAUST, IN ACCORDANCE WITH MANUFACTURERS RECOMMENDATIONS. ONE (1) TOTAL. (210lbs.) HEATER SHALL HAVE ELECTRONIC IGNITION AND EXTERNAL SHUT-OFF SWITCH WITHOUT ADJUSTING THERMOSTAT SETTING.
9. (1-2 MR-9) WET PLAY ULTRA VIOLET SYSTEM: 'AQUIONICS' MODEL # UV SWIM I-100+ 176 GPM; VALIDATED FOR OUTDOOR/CAPACITY, INCREASE TO 4" FLANGED CONNECTION IN-LINE UV. 1.3 KW AT 208V 1 PH WITH 15' CABLE. 3 - #10 WIRING WITH 20A EXTERNAL BREAKER. PROVIDE FLOOR MOUNTING. PROVIDE INSTALLATION AND PIPING PER MANUFACTURER'S RECOMMENDATIONS INCLUDING PIPING BYPASS, STRAINER AND VALVING. PROVIDE SPARE UV LAMP AT SITE AS BACK-UP.
10. (5 MR-3) (5 MR-4) (1 MR-6) WET PLAY WATER CHEMISTRY CONTROLLER: PROVIDE ONE (1) CHEMTROL PC5000 WITH FLOW CELL,ORP SENSOR, PPM SENSOR, PROVIDE ETHERNET CONNECTION AND COMMUNICATION SOFTWARE WITH AUTODIAL ALARM, 4-20mV OUTPUT WITH CORRESPONDING INPUT SENSORS AND OUTPUT CONNECTION INCLUDING TANK SENSORS, TRANSDUCERS, RELAYS,VFD CONTROL. ONE (1) TOTAL.
11. (5 MR-3) (3 MR-4) (1 MR-6) (1-2 MR-5) SWIMMING POOL WATER CHEMISTRY CONTROLLER: PROVIDE ETHERNET CONNECTION TO CHEMTROL PC1000 WITH FLOW CELL, ORP SENSOR, PPM SENSOR, FILTER CONTROL PANEL WITH GAUGES AND BACKWASH CONTROL SOLENOID VALVES AND MANUAL BACKWASH VALVE, COMMUNICATION SOFTWARE WITH AUTO DIAL ALARM 4-20 OUTPUT, CORRESPONDING INPUT SENSORS , OUTPUT CONNECTIONS, TANK SENSORS, TRANSDUCERS RELAYS VFD CONTROL (1) ONE 'IMPACT', 'WALLACE & TIERNAN' OR APPROVED EQUAL.
12. (1 MR-3) (4 MR-3) (1 MR-4) (1 MR-6) (6 MR-5) CHLORINE STORAGE/FEED SYSTEM: PROVIDE 'CHEM-TAINER' 500 GALLON #TC597IDC, DUAL STORAGE/CONTAINMENT TANK WITH LID SEISMICALLY RESTRAINED, OPERATING WEIGHT = (4,165lbs). COMPLIES WITH FED. REG #40CFR-264-193. SWIMMING POOL FEED PUMP SHALL BE 'THE SOLUTION' 22152 011728GPD, WET PLAY FEED PUMP SHALL BE 'STENNER' 85M-5, 50 GPD @25 PSI WITH FRP SHELF BRACKETS. HARD PIPE TO POINT OF INJECTION.
13. (2-4 MR-3) (1 MR-4) (1 MR-6) (6 MR-5) ACID STORAGE/FEED SYSTEM: PROVIDE 'CHEM-TAINER' 350 GALLON #TC 5256DC, DUAL STORAGE/CONTAINMENT TANK WITH LID SEISMICALLY RESTRAINED, OPERATING WEIGHT =(3,250lbs). WET PLAY FEED PUMP= 'STENNER' 45M-5, 50 GPD @ 25 PSI WITH FRP SHELF BRACKETS. HARD PIPE TO POINT OF INJECTION. SWIMMING POOL ACID FEED 'THE SOLUTION X2 #22152-02 WITH BOOSTER PUMP COMPLIES WITH FED. REG #40CFR-264-163. PROVIDE 60 GALLON 'CHEM-TAINER' VAPOR RECOVERY TANK # TC2342 DC; (500lbs.) ONE (1) TOTAL.
14. (1 MR-7) (4 MR-8) ELECTRICAL: PROVIDE ALL ELECTRICAL WIRING, CONDUIT, PANEL(S), STARTER/DISCONNECT INTERCONNECT(S) ETC. AS REQUIRED FOR PROPER EQUIPMENT INSTALLATION PER MANUFACTURERS RECOMMENDATIONS AND SHOP DRAWINGS. COORDINATE ALL WORK WITH OTHER TRADES AS REQUIRED. REFER TO ELEC. PLANS FOR ALL ADDITIONAL INFO.
15. (1 MR-8) (3 MR-8) PUMP PIT: 10'-0"x13'-10"x5'-0" DEEP. PROVIDE 1½" DIA. GALV. STEEL GUARDRAIL. PROVIDE FLOOR DRAIN TO WASTE. PROVIDE WATERPROOFING PER SPECIFICATIONS. ACCESS LADDER TO BE 'FIBERGRATE' DYNARAIL FRP OR EQUAL. PROVIDE 'HYDROMATIC' 5D/V33 1/3HP 120VAC SUMP PUMP W/ 1½" EFFLUENT PIPE CONNECTION WITH CHECK VALVE FROM PUMP PIT FLOOR AND AIR GAP TO BACKWASH PIT.
16. (6 MR-3) (2 MR-4) SWIMMING POOL FILL SYSTEM: 3" 'CLA-VAL' FILL SYSTEM TO INCLUDE 3" 'CLA-VAL' SOLENOID CONTROL VALVE #136-01BY, 3" DUCT IRON, EPOXY COATED BODY WITH CAST IRON DISC RETAINER AND DIAPHRAGM WASHER, BRONZE TRIM, FLANGED GLOBE PATTERN, 120V AT 60HZ. SOLENOID WIRING SHALL BE WIRED TO WATER CHEMISTRY CONTROLLER. PROVIDE 6" AIR GAP AT FILL POINT.
17. (2 MR-4) SIM. WET PLAY FILL SYSTEM: 1" 'CLA-VAL' FILL SYSTEM TO INCLUDE 1" 'CLA-VAL' SOLENOID CONTROL VALVE #136-01BY, 1" DUCT IRON, EPOXY COATED BODY WITH CAST IRON DISC RETAINER AND DIAPHRAGM WASHER, BRONZE TRIM, FLANGED GLOBE PATTERN, 120V AT 60HZ. SOLENOID WIRING SHALL BE WIRED TO WATER CHEMISTRY CONTROLLER. PROVIDE 2" AIR GAP AT FILL POINT.
18. (2 MR-8) EYEWASH/SHOWER: 'HAWS' MODEL #8310WC BARRIER FREE COMBINATION SHOWER AND EYE/FACE WASH WITH CORROSION RESISTANT PROTECTION. SEE MEP SHEETS FOR SUPPLY PIPING. TWO (2) TOTAL.
19. (5 MR-1) LIGHTING CONTACTOR PANEL: 'ALLEN BRADLEY' #500L, OR APPROVED EQUAL. PANEL SHALL BE MOUNTED IN A NEMA 12 HINGED COVER - LOCKABLE ENCLOSURE. CONTACTORS TO BE SWITCHED BY MOMENTARY SWITCH EQUAL TO 'HUBBELL' #1551 MOUNTED IN J-BOX IN MECHANICAL EQUIPMENT ROOM. REFER TO ELECTRICAL PLANS FOR LOCATION OF OWNER COORDINATED REMOTE UNDERWATER LIGHT SWITCH.
20. WET PLAY AUTOMATION: 'VORTEX' COMMAND CENTER INCLUDING SYSTEM CONTROLLER, PIT WALL MOUNTED WATER DISTRIBUTION MANIFOLDS WITH TEN (10) OUTLETS, SOLENOID VALVES. ONE (1) DYNAMIC BYPASS VALVE, ISOLATION VALVES, BOLLARD OPERATED ACTIVATION, COMPLETE. CONTRACTOR SHALL PROVIDE COMPLETE SHOP DRAWINGS FOR APPROVAL INCLUDING CIRCULATION PUMP, FEATURE PUMP AND ULTRAVIOLET ELECTRICAL INTERLOCKS. PROVIDE WINTER DRAIN POINTS ADJACENT TO EQUIPMENT AREA FOR ALL MANIFOLD LINES.
21. (6 MR-4) WET PLAY FLOWMETER: SIGNET # P51530-X0 FLOWSENSOR WITH SIGNET #5090 FLOW MONITOR, 3" LINE SIZE, NSF LISTED.
22. (1 MR-8) BACKWASH PIT: 10'-0"x4'-6"x5'-0" DEEP (1,685 GALLONS) WITH 8" DIA. P-TRAP OUTLET TO SEWER. PROVIDE WATERPROOFING PER SPECIFICATIONS. COORDINATE WITH STRUCTURAL AND PLUMBING PLANS.
23. (2 MR-6) POOL OPERATOR WORKSTATION DESK: 'TOTAL LAB SOLUTIONS' EPOXY COUNTERTOP WITH DROP-IN SINK AND TWO (2) END CABINETS. FURNISH WITH WALL MOUNTED TWO (2) FAUCETS 'BROEN BOSS' OR APPROVED EQUAL. SEE MEP PLANS FOR WATER SUPPLY PIPING.
24. (4 SP-6) SURGE CHAMBER: 8'-0"x12'-0"x9'-6" DEEP WITH ACCESS MANHOLE, RUNG LADDER.
25. 'BELL & GOSSET' 3DS-10B 10" FLANGED PROCCESS CONTROL VALVE EPOXY COATED
26. SWIMMING POOL FLOW METER SIGNET 5090 SELF POWERED WITH 10" PIPE SENSOR.
27. (6 MR-3) SURGE CHAMBER SUMP PUMP, 'HYDROMATIC' 5D/V33 1/3HP 120VAC 1½" EFFLUENT PIPE CONNECTION WITH CHECK VALVE FROM SURGE PIT FLOOR THROUGH SURGE CHAMBER LID AND AIR GAP TO BACKWASH PIT. PROVIDE ELECTRICAL CONNECTION WITH ON/OFF SWITCH (SEASONAL USE)

GENERAL NOTES

1. THE PIPING SYSTEM SHALL HAVE DIRECTION OF FLOW ARROWS INDICATED ON THE PIPES.
2. PUBLIC POOLS SHALL HAVE A FLOW DIAGRAM OF THE POOL'S PIPING SYSTEM WITH OPERATION INSTRUCTIONS.
3. THE FLOW DIAGRAM AND INSTRUCTIONS SHALL BE AVAILABLE ON THE PREMISES AT ALL TIME

LEGEND

BV	=	BALL VALVE	BW	=	BACKWASH
BFV	=	BUTTERFLY VALVE	FS	=	FLOOR SINK
CV	=	CHECK VALVE	AI	=	ACID INJECTION
FM	=	FLOWMETER	CI	=	CHLORINE INJECTION
HB	=	HOSE BIBB	PH	=	PIPE HANGER (5 MR-9)
FD	=	FLOOR DRAIN	PG/VG	=	VACUUM / PRESSURE GAUGE (3 MR-9)
FV	=	FLOAT VALVE			

PIPING, DUCTWORK, AND ELECTRICAL DISTRIBUTION SYSTEM BRACING

PIPING, DUCTWORK, AND ELECTRICAL DISTRIBUTION SYSTEMS SHALL BE BRACED TO COMPLY WITH THE FORCES AND DISPLACEMENTS PRESCRIBED IN ASCE 7-10 SECTION 13.3 AS DEFINED IN ASCE 7-10 SECTION 13.6.8, 13.6.7, 13.6.5.6, AND 2016 CBC, SECTIONS 1616A1.24, 1616A1.25, AND 1616A1.26.

THE BRACING AND ATTACHMENTS TO THE STRUCTURE SHALL BE DETAILED ON THE APPROVED DRAWINGS OR THEY SHALL COMPLY WITH ONE OF THE OSHPD PRE-APPROVALS (OPM #0052-13)

COPIES OF THE BRACING SYSTEM INSTALLATION GUIDE OR MANUAL SHALL BE AVAILABLE ON THE JOBSITE PRIOR TO THE START OF HANGING AND BRACING OF THE PIPE, DUCTWORK, AND ELECTRICAL DISTRIBUTION SYSTEMS.

THE STRUCTURAL ENGINEER OF RECORD SHALL VERIFY THE ADEQUACY OF THE STRUCTURE TO SUPPORT THE HANGER AND BRACE LOADS.

THREE PHASE MOTOR LOADS AT 460V

SWIMMING POOL CIRCULATION PUMP: 25 HP @ 460V = 34 AMPS

HEATER/GAS PIPING INSTALLATION NOTE

GAS FIRED POOL HEATER(S) INSTALLED ON A GAS SUPPLY SYSTEM UTILIZING A 2 PSI OR 5 PSI SUPPLY, GAS PRESSURE SHALL REQUIRE A REGULATOR TO REDUCE THE SUPPLY PRESSURE. A PROPERLY SIZED AND INSTALLED LOCK-UP-TYPE HIGH GAS PRESSURE REGULATOR (HGPR) SHALL BE USED TO REDUCE THE GAS PRESSURE AT THE UNIT INLET TO A MINIMUM OF 4" TO A MAXIMUM OF 11" WATER COLUMN.

'LOCHINVAR' RECOMMENDS THAT ANY REQUIRED LINE LOCK-UP-TYPE HIGH GAS PRESSURE REGULATOR BE INSTALLED WITH A MINIMUM OF 8 FEET TO 10 FEET OF PIPE FROM ITS DISCHARGE TO THE UNIT'S GAS INLET. IF A STRAIGHT DISTANCE OF GAS PIPE IS NOT AVAILABLE THE ADDITION OF A VERTICAL 'U' IN THE GAS PIPING DOWN STREAM FROM THE 'HGPR' CAN BE USED TO ACHIEVE THE 8 FEET TO 10 FEET OF DISTANCE.

NOTE:
CONTRACTOR IS RESPONSIBLE FOR HEATER VENTING, EXHAUST DUCTING, FLUE TERMINUS AND PENETRATION(S) THROUGH BUILDING STRUCTURE.

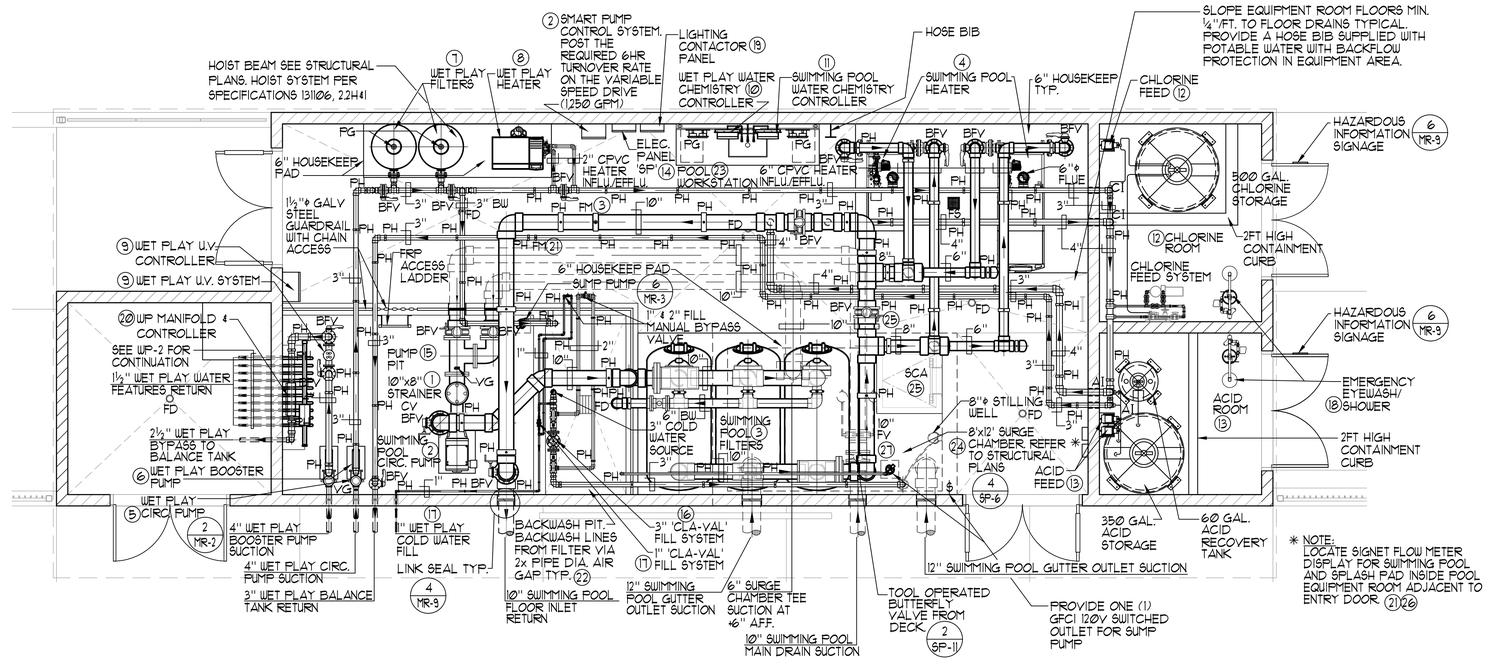

BUREAU OF ENGINEERING OFFICIAL RECORD

1 MECHANICAL ROOM LAYOUT PLAN ¼"=1'-0"

AQUATIC DESIGN GROUP
2228 Faraday Ave, Carlsbad, CA 92008
AquaticDesignGroup.com
760.438.2430

ENGINEERING
CITY OF LOS ANGELES

NO.	REVISION DESCRIPTION	DATE	BY

BUILDING NO. -
INDEX NO. RP-300118

LICENSED ARCHITECT FOREIGN C-26222 REN. 08/31/21 STATE OF CALIFORNIA

DEPARTMENT OF PUBLIC WORKS
BUREAU OF ENGINEERING
CITY OF LOS ANGELES

CITY ENGINEER DATE:
VERTICAL CONTROL:
HORIZONTAL CONTROL:

GARY LEE MOORE, PE, ENV SP	CITY ENGINEER:	DATE:
ARCHITECTURAL DIVISION	ARCHITECT/ENGINEER: SJF	LIC. NO.: C-26222
	DESIGNED BY: SJF	
	DRAWN BY: GSF	
	CHECKED BY: SJF	
	APPROVED BY: SJF	

SHEET TITLE: MECHANICAL ROOM LAYOUT PLAN
PROJECT: GRANADA HILLS POOL AND BATHHOUSE REPLACEMENT PROJECT
ADDRESS: 16730 CHATSWORTH STREET GRANADA HILLS, CA 91344

BID SET
PROJECT ISSUE DATE:06/22/21.

WORK ORDER NO. #E170517
PLAN FILE NO.
DRAWING NO. MR-1
SHEET 0 OF SHEETS

PLOTTED: 6/25/2018 2:53:10 PM

THE CITY OF LOS ANGELES OR ITS OFFICERS OR AGENTS SHALL NOT BE RESPONSIBLE FOR THE ACCURACY OR COMPLETENESS OF ELECTRONIC COPIES OF THIS PLAN SHEET.
TTLB TEMPLATE REVISION DATE: 02/2013
SHEET ISSUE DATE: 12/01/19
FILE PATH: BIM 360://Granada Hills Pool Renovation/A_Granada-Hills_2017.rvt
REVISION DATES (DESIGN STAGE ONLY)

EQUIPMENT LIST

1. SWIMMING POOL STRAINER: 'MER-MADE' F.O. SERIES FRP REDUCING BASKET STRAINER: ONE (1) 10"x8" STANDARD, WITH ACRYLIC LID AND TWO (2) STAINLESS STEEL STRAINERS EA. (150lbs.)
2. (1 MR-2) (3-4 MR-1) SWIMMING POOL CIRCULATION PUMP: 'PACO' #0115-T; 6"x8"x15" TYPE 'LC' END SUCTION CENTRIFUGAL PUMP; 1150 RPM 460V, 3PH; 30HP; RATED AT 1,215 GPM @ 60 FT. TDH; 85% EFFICIENT; PREMIUM EFFICIENCY TEFC MOTOR; EPOXY COAT ALL WET SURFACES. 'PACO', 'AURORA' OR EQUAL. (760 lbs.) PROVIDE 'PENTAIR ACCUDRIVE PUMP CONTROL SYSTEM VARIABLE SPEED DRIVE MODEL #AD300-46G3-N12FB WITH FULL BYPASS MODE AND 4-20mA FLOW METER KIT 910016-420KIT AND EXTENDED WARRANTY AD-EWW272 . COORDINATE MOUNTING LOCATION TO MAINTAIN DESIRED CLEARANCES, 460V 3PH. (122 lbs.)
3. (4 MR-2) (1 MR-6) (2 MR-1) SWIMMING POOL FILTERS: 'STARK' S63-96-10 AUTOMATIC FILTER CONTROL (AFC) FULLY AUTOMATIC HI-RATE PERMANENT MEDIA FILTER WITH 81 SQ. FT. OF FILTER AREA RATED AT 1296 GPM AT 16 GPM/SQ. FT. COMPLETE WITH 10" FACE PIPING, 6" BACKWASH, SEISMIC ANCHORAGE. PROVIDE ALL UTILITIES, PIPING, VALVING, ETC. (9,800 lbs EA. TANK) 'STARK', OR EQUAL. PROVIDE SIGNET MK-515 FLOSENSOR WITH DIGITAL READ-OUT.
4. (5 MR-2) (1 MR-1) SWIMMING POOL HEATER: INDIRECT FIRED POOL HEATING PACKAGE SYSTEM; 'AQUA-S' WITH SMARTTOUCH CONTROL CONDENSING MODULATING BOILER, TITANIUM HEAT EXCHANGER WITH CPVC CONNECTIONS, FACTORY ASSEMBLED SKID MOUNTED PACKAGE, CALIFORNIA CODE CONTROLS, 1 1/2" NATURAL GAS CONNECTION, 4" WATER CONNECTIONS, 6" DIAMETER AIR INLET AND 6" DIAMETER SIDEWALL VENT SIZE, PVC VENTED, 1,449,877 BTU PER HOUR INPUT, 91% EFFICIENT, 'LOCHINVAR' #APN1500, WEIGHT = 3,500 lbs. EA. TWO (2) TOTAL.
5. (2 MR-2) (1 MR-6) WET PLAY CIRCULATION PUMP: 'PENTAIR' XFK-12 WHISPERFLO XF PUMP; 3,450 RPM, 3HP; 208V, 3PH; SELF PRIMING PUMP WITH INTEGRAL STRAINER RATED AT 155 GPM AT 60FT. TDH. ONE (1) TOTAL (58lbs.) COMPLETE WITH TIME CLOCK SYSTEM. INTERCONNECT CIRCULATION PUMP WITH BOOSTER PUMPS TO ONLY ALLOW BOOSTER PUMP OPERATION WHEN CIRCULATION SYSTEM IS ON.
6. (2 MR-2) WET PLAY BOOSTER PUMP: 'PENTAIR' XFK-8 WHISPERFLO XF PUMP; 3450 RPM, 2HP; 208-230V/460V, 3PH; WITH INTEGRAL STRAINER RATED AT 135 GPM AT 50 FT. TDH. INTERCONNECT WITH WATER FEATURE CIRCULATION PUMP. (FIELD VERIFY MOTOR VOLTAGE PRIOR TO ORDERING.) (58lbs.) PROVIDE MOTOR STARTER/DISCONNECT.
7. (3 MR-2) (2 MR-6) WET PLAY FILTERS: 'PENTAIR' TR100-C-3 HI-RATE PERMANENT MEDIA FILTERS WITH 9.82 SQ. FT. OF FILTER AREA; RATED AT 157 GPM AT 16 GPM/SQ. FT. COMPLETE WITH 3" MANIFOLD, 2" MULTIPORT BACKWASH AND SEISMIC ANCHORAGE. PROVIDE ALL UTILITIES, PIPING, VALVING, ETC. TWO (2) TANKS TOTAL. (1000lbs. EA. TANK.)
8. (6 MR-2) (1 MR-6) WET PLAY HEATER: 'RAYPAK' MODEL #DIGITAL 331; 332,000 BTU INPUT, 3/4" NATURAL GAS CONNECTION, 2" WATER INFLUENT/EFFLUENT CONNECTIONS CUPRO NICKEL HEAT EXCHANGER ASME KIT AND 5" DIRECT AIR INTAKE AND 6" EXHAUST, IN ACCORDANCE WITH MANUFACTURER'S RECOMMENDATIONS. ONE (1) TOTAL. (210lbs.) HEATER SHALL HAVE ELECTRONIC IGNITION AND EXTERNAL SHUT-OFF SWITCH WITHOUT ADJUSTING THERMOSTAT SETTING.
9. (1-2 MR-9) WET PLAY ULTRA VIOLET SYSTEM: 'AQUIONICS' MODEL # UV SWIM I-100+ 176 GPM; VALIDATED FOR OUTDOOR/CAPACITY, INCREASE TO 4" FLANGED CONNECTION IN-LINE UV. 1.3 KW AT 208V 1 PH WITH 15' CABLE. 3 - #10 WIRING WITH 20A EXTERNAL BREAKER. PROVIDE FLOOR MOUNTING. PROVIDE INSTALLATION AND PIPING PER MANUFACTURER'S RECOMMENDATIONS INCLUDING PIPING BYPASS, STRAINER AND VALVING. PROVIDE SPARE UV LAMP AT SITE AS BACK-UP.
10. (5 MR-3) (5 MR-4) (1 MR-6) WET PLAY WATER CHEMISTRY CONTROLLER: PROVIDE ONE (1) CHEMTROL PC5000 WITH FLOW CELL, ORP SENSOR, PPM SENSOR. PROVIDE ETHERNET CONNECTION AND COMMUNICATION SOFTWARE WITH AUTODIAL ALARM, 4-20mV OUTPUT WITH CORRESPONDING INPUT SENSORS AND OUTPUT CONNECTION INCLUDING TANK SENSORS, TRANSDUCERS, RELAYS, VFD CONTROL. ONE (1) TOTAL.
11. (5 MR-3) (3 MR-4) (1-2 MR-5) (1 MR-6) SWIMMING POOL WATER CHEMISTRY CONTROLLER: PROVIDE ETHERNET CONNECTION TO CHEMTROL PC1000 WITH FLOW CELL, ORP SENSOR, PPM SENSOR, FILTER CONTROL PANEL WITH GAUGES AND BACKWASH CONTROL SOLENOID VALVES AND MANUAL BACKWASH VALVE; COMMUNICATION SOFTWARE WITH AUTO DIAL ALARM 4-20 OUTPUT, CORRESPONDING INPUT SENSORS , OUTPUT CONNECTIONS, TANK SENSORS, TRANSDUCERS RELAYS VFD CONTROL (1) ONE 'IMPACT', 'WALLACE & TIERNAN' OR APPROVED EQUAL.
12. (1 MR-3) (4 MR-3) (1 MR-4) (1 MR-6) (6 MR-9) CHLORINE STORAGE/FEED SYSTEM: PROVIDE 'CHEM-TAINER' 500 GALLON #TC597-1DC, DUAL STORAGE/CONTAINMENT TANK WITH LID SEISMICALLY RESTRAINED, OPERATING WEIGHT = (4,165lbs.) COMPLIES WITH FED. REG #40CFR-264-193. SWIMMING POOL FEED PUMP SHALL BE THE SOLUTION' 22152 @11.72GPD. WET PLAY FEED PUMP SHALL BE 'STENNER' 85M-5, 50 GPD @25 PSI WITH FRP SHELF BRACKETS. HARD PIPE TO POINT OF INJECTION.
13. (2-4 MR-3) (1 MR-4) (1 MR-6) (6 MR-9) ACID STORAGE/FEED SYSTEM: PROVIDE 'CHEM-TAINER' 350 GALLON #TC 525-6DC, DUAL STORAGE/CONTAINMENT TANK WITH LID SEISMICALLY RESTRAINED, OPERATING WEIGHT =(3,250lbs.). WET PLAY FEED PUMP= 'STENNER' 45M-5, 50 GPD @ 25 PSI WITH FRP SHELF BRACKETS. HARD PIPE TO POINT OF INJECTION. SWIMMING POOL ACID FEED 'THE SOLUTION X2 #22152-02 WITH BOOSTER PUMP COMPLIES WITH FED. REG #40CFR-264-163. PROVIDE 60 GALLON 'CHEM-TAINER' VAPOR RECOVERY TANK # TC2342 DC; (500lbs.) ONE (1) TOTAL.
14. (1 MR-1) (4 MR-8) ELECTRICAL: PROVIDE ALL ELECTRICAL WIRING, CONDUIT, PANEL(S), STARTER/DISCONNECT, INTERCONNECT(S) ETC. AS REQUIRED FOR PROPER EQUIPMENT INSTALLATION PER MANUFACTURERS RECOMMENDATIONS AND SHOP DRAWINGS. COORDINATE ALL WORK WITH OTHER TRADES AS REQUIRED. REFER TO ELEC. PLANS FOR ALL ADDITIONAL INFO.
15. (1 MR-8) (3 MR-8) PUMP PIT: 10'-0"x13'-10"x5'-0" DEEP. PROVIDE 1½" DIA. GALV. STEEL GUARDRAIL. PROVIDE FLOOR DRAIN TO WASTE. PROVIDE WATERPROOFING PER SPECIFICATIONS. ACCESS LADDER TO BE 'FIBERGRATE' DYNARAIL FRP OR EQUAL. PROVIDE 'HYDROMATIC' SD/V33 1/3HP 120VAC SUMP PUMP W/ 1½" EFFLUENT PIPE CONNECTION WITH CHECK VALVE FROM PUMP PIT FLOOR AND AIR GAP TO BACKWASH PIT.
16. (6 MR-3) (2 MR-4) SWIMMING POOL FILL SYSTEM: 3" 'CLA-VAL' FILL SYSTEM TO INCLUDE 3" 'CLA-VAL' SOLENOID CONTROL VALVE #136-01BY, 3" DUCT IRON, EPOXY COATED BODY WITH CAST IRON DISC RETAINER AND DIAPHRAGM WASHER, BRONZE TRIM, FLANGED GLOBE PATTERN, 120V AT 60HZ, SOLENOID WIRING SHALL BE WIRED TO WATER CHEMISTRY CONTROLLER. PROVIDE 6" AIR GAP AT FILL POINT.
17. (2 MR-4) SIM. WET PLAY FILL SYSTEM: 1" 'CLA-VAL' FILL SYSTEM TO INCLUDE 1" 'CLA-VAL' SOLENOID CONTROL VALVE #136-01BY, 1" DUCT IRON, EPOXY COATED BODY WITH CAST IRON DISC RETAINER AND DIAPHRAGM WASHER, BRONZE TRIM, FLANGED GLOBE PATTERN, 120V AT 60HZ. SOLENOID WIRING SHALL BE WIRED TO WATER CHEMISTRY CONTROLLER. PROVIDE 2" AIR GAP AT FILL POINT.
18. (2 MR-8) EYEWASH/SHOWER: 'HAWS' MODEL #8309WC BARRIER FREE COMBINATION SHOWER AND EYE/FACE WASH WITH CORROSION RESISTANT PROTECTION. SEE MEP SHEETS FOR SUPPLY PIPING. TWO (2) TOTAL.
19. (5 MR-7) LIGHTING CONTACTOR PANEL: 'ALLEN BRADLEY' #500L, OR APPROVED EQUAL. PANEL SHALL BE MOUNTED IN A NEMA 12 HINGED COVER - LOCKABLE ENCLOSURE. CONTACTORS TO BE SWITCHED BY MOMENTARY SWITCH EQUAL TO 'HUBBELL' #1551 MOUNTED IN J-BOX IN MECHANICAL EQUIPMENT ROOM. REFER TO ELECTRICAL PLANS FOR LOCATION OF OWNER COORDINATED REMOTE UNDERWATER LIGHT SWITCH.
20. WET PLAY AUTOMATION: 'VORTEX' COMMAND CENTER INCLUDING SYSTEM CONTROLLER, PIT WALL MOUNTED WATER DISTRIBUTION MANIFOLDS, WITH TEN (10) OUTLETS, SOLENOID VALVES. ONE (1) DYNAMIC BYPASS VALVE, ISOLATION VALVES, BOLLARD OPERATED ACTIVATION, COMPLETE. CONTRACTOR SHALL PROVIDE COMPLETE SHOP DRAWINGS FOR APPROVAL INCLUDING CIRCULATION PUMP, FEATURE PUMP AND ULTRAVIOLET ELECTRICAL INTERLOCKS. PROVIDE WINTER DRAIN POINTS ADJACENT TO EQUIPMENT AREA FOR ALL MANIFOLD LINES.
21. (6 MR-4) WET PLAY FLOWMETER: SIGNET # P51530-X0 FLOWSENSOR WITH SIGNET #5090 FLOW MONITOR, 3" LINE SIZE, NSF LISTED.
22. (1 MR-8) BACKWASH PIT: 10'-0"x4'-6"x5'-0" DEEP (1,685 GALLONS) WITH 8" DIA. P-TRAP OUTLET TO SEWER. PROVIDE WATERPROOFING PER SPECIFICATIONS. COORDINATE WITH STRUCTURAL AND PLUMBING PLANS.
23. (2 MR-6) POOL OPERATOR WORKSTATION DESK: 'TOTAL LAB SOLUTIONS' EPOXY COUNTERTOP WITH DROP-IN SINK AND TWO (2) END CABINETS. FURNISH WITH WALL MOUNTED TWO (2) FAUCETS 'BROEN BOSS' OR APPROVED EQUAL. SEE MEP PLANS FOR WATER SUPPLY PIPING.
24. (4 SP-6) SURGE CHAMBER: 8'-0"x12'-0"x9'-6" DEEP WITH ACCESS MANHOLE, RUNG LADDER.
25. 'BELL & GOSSET' 3DS-10B 10" FLANGED PROCCESS CONTROL VALVE EPOXY COATED
26. SWIMMING POOL FLOW METER SIGNET 5090 SELF POWERED WITH 10" PIPE SENSOR.
27. (6 MR-3) SURGE CHAMBER SUMP PUMP, 'HYDROMATIC' SD/V33 1/3HP 120VAC 1½" EFFLUENT PIPE CONNECTION WITH CHECK VALVE FROM SURGE PIT FLOOR THROUGH SURGE CHAMBER LID AND AIR GAP TO BACKWASH PIT. PROVIDE ELECTRICAL CONNECTION WITH ON/OFF SWITCH (SEASONAL USE)

GENERAL NOTES

1. THE PIPING SYSTEM SHALL HAVE DIRECTION OF FLOW ARROWS INDICATED ON THE PIPES.
2. PUBLIC POOLS SHALL HAVE A FLOW DIAGRAM OF THE POOL'S PIPING SYSTEM WITH OPERATION INSTRUCTIONS.
3. THE FLOW DIAGRAM AND INSTRUCTIONS SHALL BE AVAILABLE ON THE PREMISES AT ALL TIME

LEGEND

BV	=	BALL VALVE	BW	=	BACKWASH
BFV	=	BUTTERFLY VALVE	FS	=	FLOOR SINK
CV	=	CHECK VALVE	AI	=	ACID INJECTION
FM	=	FLOWMETER	CI	=	CHLORINE INJECTION
HB	=	HOSE BIBB	PH	=	PIPE HANGER (5 MR-9)
FD	=	FLOOR DRAIN	PG/VG	=	VACUUM / PRESSURE GAUGE (3 MR-9)
FV	=	FLOAT VALVE			

PIPING, DUCTWORK, AND ELECTRICAL DISTRIBUTION SYSTEM BRACING

PIPING, DUCTWORK, AND ELECTRICAL DISTRIBUTION SYSTEMS SHALL BE BRACED TO COMPLY WITH THE FORCES AND DISPLACEMENTS PRESCRIBED IN ASCE 7-10 SECTION 13.3 AS DEFINED IN ASCE 7-10 SECTION 13.6.8, 13.6.7, 13.6.5.6, AND 2016 CBC, SECTIONS 1616.A.1.24, 1616.A.1.25, AND 1616.A.1.26.

THE BRACING AND ATTACHMENTS TO THE STRUCTURE SHALL BE DETAILED ON THE APPROVED DRAWINGS OR THEY SHALL COMPLY WITH ONE OF THE OSHPD PRE-APPROVALS (OPM #0052-13)

COPIES OF THE BRACING SYSTEM INSTALLATION GUIDE OR MANUAL SHALL BE AVAILABLE ON THE JOBSITE PRIOR TO THE START OF HANGING AND BRACING OF THE PIPE, DUCTWORK, AND ELECTRICAL DISTRIBUTION SYSTEMS.

THE STRUCTURAL ENGINEER OF RECORD SHALL VERIFY THE ADEQUACY OF THE STRUCTURE TO SUPPORT THE HANGER AND BRACE LOADS.

THREE PHASE MOTOR LOADS AT 460V

SWIMMING POOL CIRCULATION PUMP: 25 HP @ 460V = 34 AMPS

HEATER/GAS PIPING INSTALLATION NOTE

GAS FIRED POOL HEATER(S) INSTALLED ON A GAS SUPPLY SYSTEM UTILIZING A 2 PSI OR 5 PSI SUPPLY, GAS PRESSURE SHALL REQUIRE A REGULATOR TO REDUCE THE SUPPLY PRESSURE. A PROPERLY SIZED AND INSTALLED LOCK-UP-TYPE HIGH GAS PRESSURE REGULATOR (HGPR) SHALL BE USED TO REDUCE THE GAS PRESSURE AT THE UNIT INLET TO A MINIMUM OF 4" TO A MAXIMUM OF 11" WATER COLUMN.

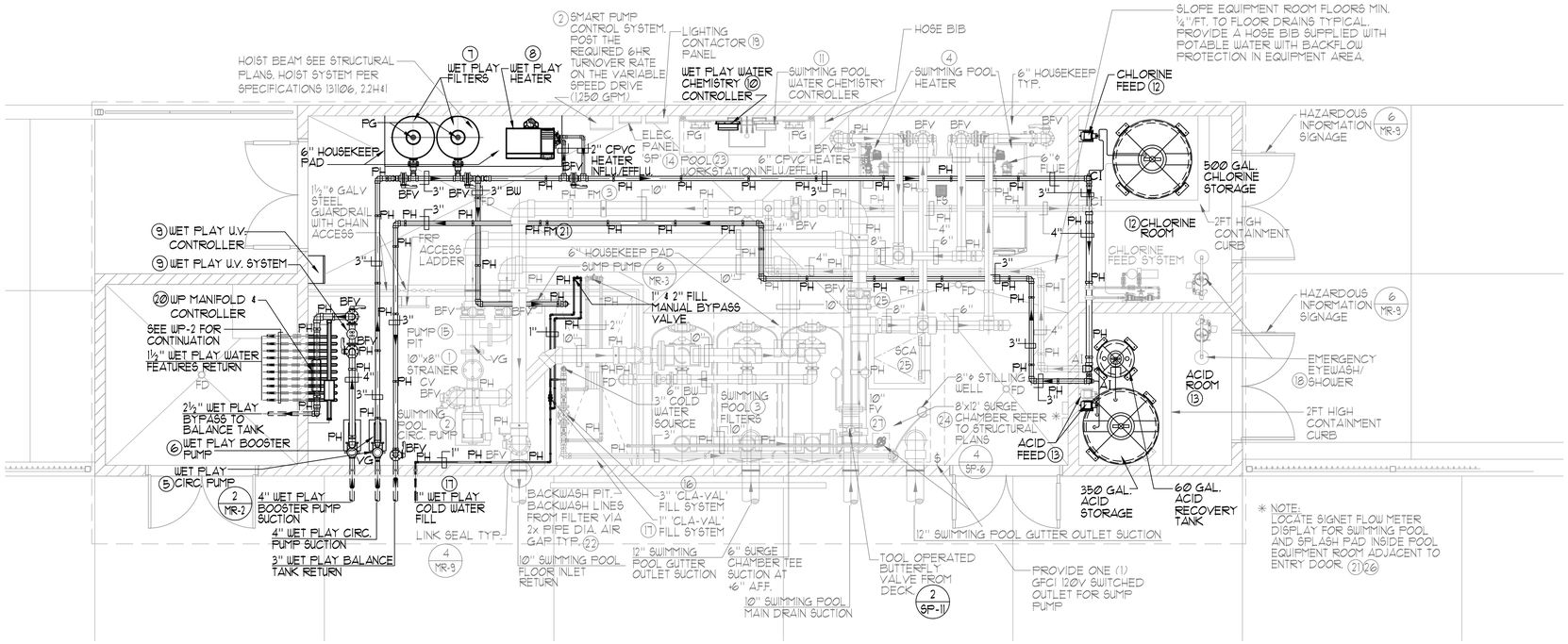

BUREAU OF ENGINEERING — OFFICIAL RECORD

1 WET PLAY MECHANICAL ROOM LAYOUT PLAN — 1/4"=1'-0"

AQUATIC DESIGN GROUP
2228 Faraday Ave, Carlsbad, CA 92008
AquaticDesignGroup.com
760.438.2430

ENGINEERING — CITY OF LOS ANGELES

BUREAU OF ENGINEERING

NO.	REVISION DESCRIPTION	DATE	BY

BUILDING NO. -

INDEX NO. RP-300118

LICENSED ARCHITECT — JOSEPH FORREST SIMS — C-26222 — REN 08/31/21 — STATE OF CALIFORNIA

DEPARTMENT OF PUBLIC WORKS — CITY OF LOS ANGELES

GARY LEE MOORE, PE, ENV SP — CITY ENGINEER

ARCHITECT/ENGINEER: SJF — LIC. NO.: C-26222 — DATE: 12/01/2019
DESIGNED BY: SJF — DATE: 12/01/2019
DRAWN BY: GSF — DATE: 12/01/2019
CHECKED BY: SJF — DATE: 12/01/2019
APPROVED BY: SJF — DATE: 12/01/2019

ARCHITECTURAL DIVISION

VERTICAL CONTROL:
HORIZONTAL CONTROL:

SHEET TITLE:

PROJECT: GRANADA HILLS POOL AND BATHHOUSE REPLACEMENT PROJECT
ADDRESS: 16730 CHATSWORTH STREET GRANADA HILLS, CA 91344

BID SET
PROJECT ISSUE DATE: 06/22/21.

WORK ORDER NO. #E170517
PLAN FILE NO.
DRAWING NO. MR-1A
SHEET 0 OF SHEETS

PLOTTED: 6/25/2018 2:53:10 PM

THE CITY OF LOS ANGELES OR ITS OFFICERS OR AGENTS SHALL NOT BE RESPONSIBLE FOR THE ACCURACY OR COMPLETENESS OF ELECTRONIC COPIES OF THIS PLAN SHEET.

TTLB TEMPLATE REVISION DATE: 02/2013
SHEET ISSUE DATE: 12/01/19
FILE PATH: BIM 360://Granada Hills Pool Renovation/A_Granada-Hills_2017.rvt

REVISION DATES (DESIGN STAGE ONLY)

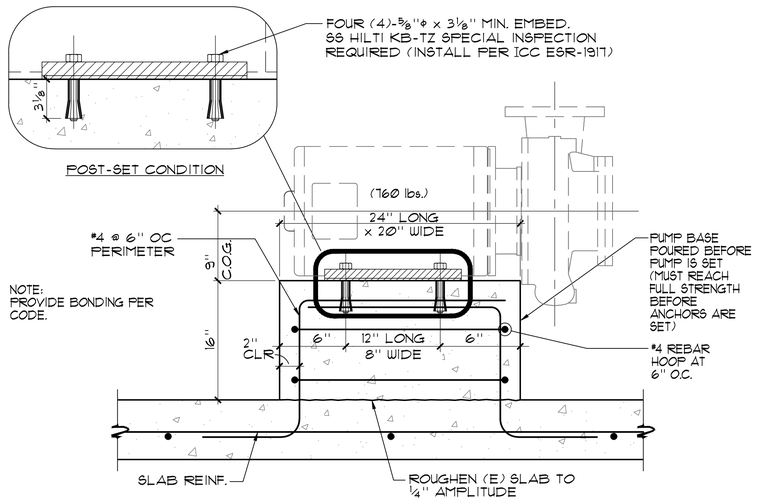

1 **PUMP ANCHORAGE** NO SCALE

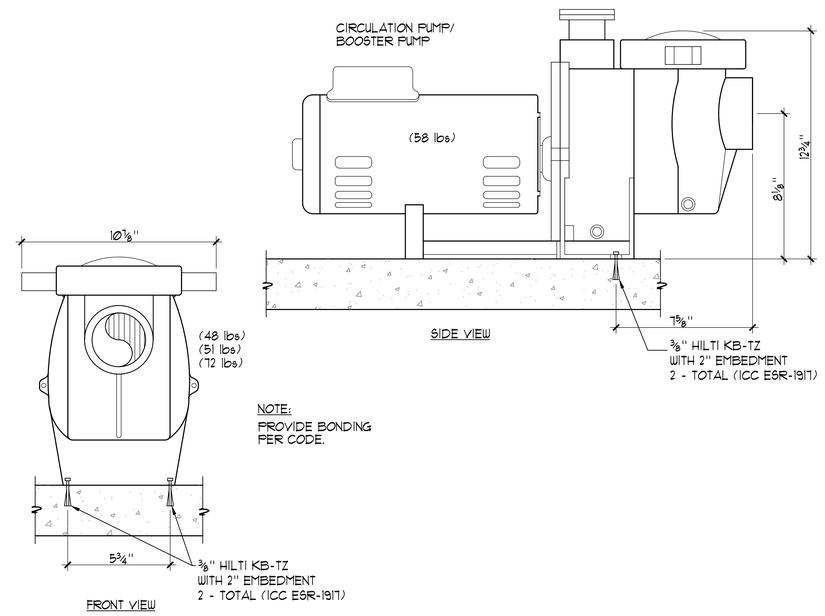

2 **PUMP ANCHORAGE** NO SCALE

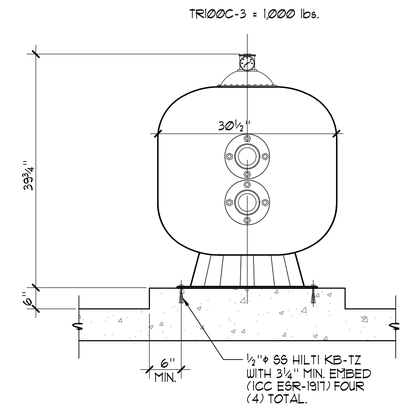

3 **FILTER ANCHORAGE** NO SCALE

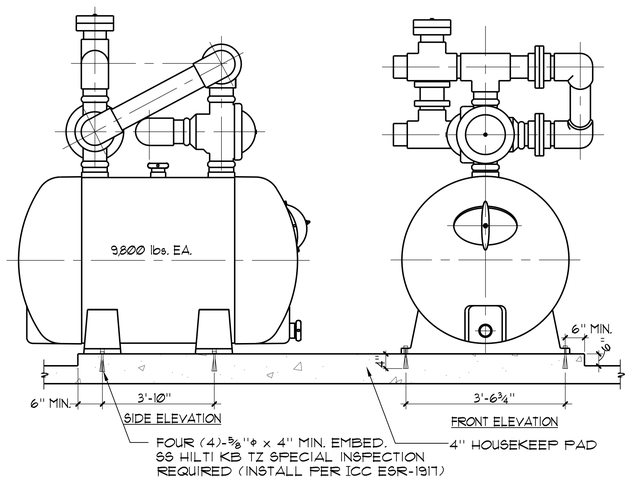

4 **FILTER ANCHORAGE** NO SCALE

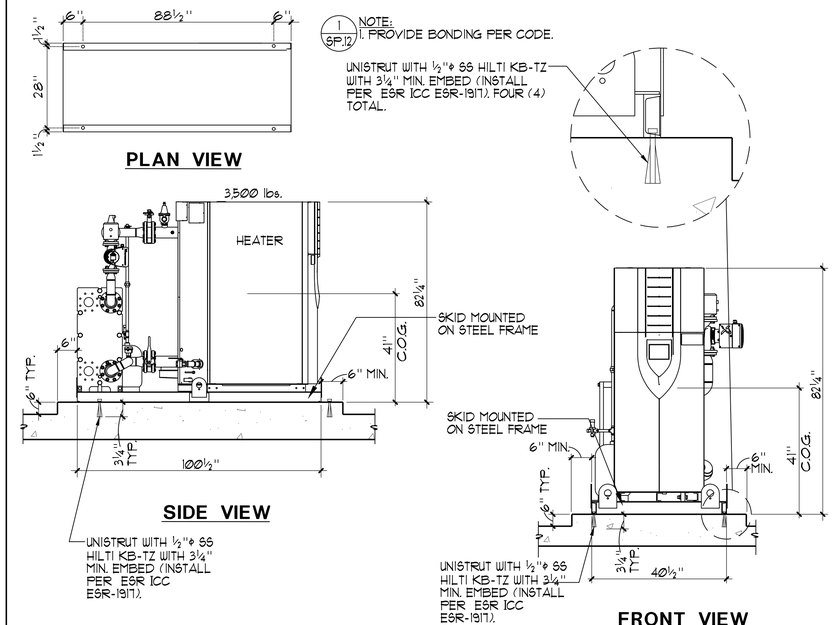

5 **HEATER ANCHORAGE** NO SCALE

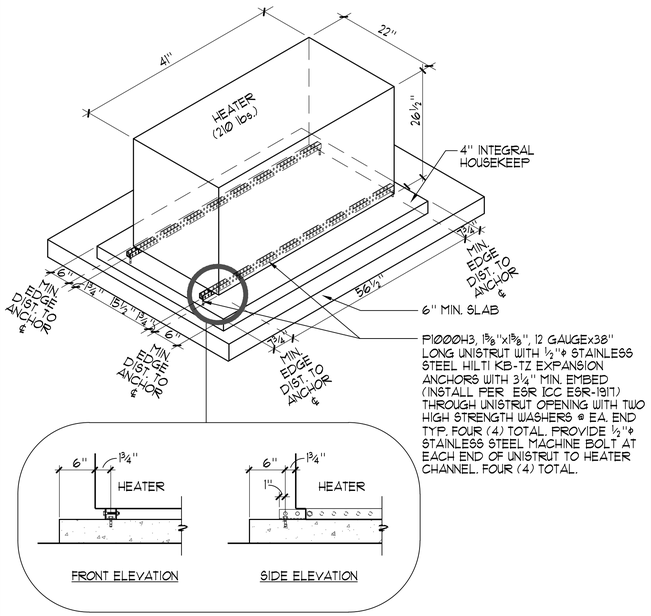

6 **HEATER ANCHORAGE** NO SCALE

AQUATIC DESIGN GROUP
2220 Faraday Ave, Carlsbad, CA 92008
AquaticDesignGroup.com
760-438-2400

BUREAU OF ENGINEERING
OFFICIAL RECORD

CITY OF LOS ANGELES
DEPARTMENT OF PUBLIC WORKS
BUREAU OF ENGINEERING

ENGINEERING
CITY OF LOS ANGELES

NO.	REVISION DESCRIPTION	DATE	BY

BUILDING NO. -

INDEX NO. RP-300118

LICENSED ARCHITECT FOREIGN STATE OF CALIFORNIA C-26222 RENEWAL 08/31/21

CITY ENGINEER

	DATE:
	12/01/2019
	12/01/2019
	12/01/2019
	12/01/2019
	12/01/2019

GARY LEE MOORE, PE, ENV SP
ARCHITECTURAL DIVISION
LIC. NO.: C-26222

ARCHITECT/ENGINEER:	SJF
DESIGNED BY:	SJF
DRAWN BY:	GSF
CHECKED BY:	SJF
APPROVED BY:	SJF

VERTICAL CONTROL:
HORIZONTAL CONTROL:

SHEET TITLE: MECHANICAL ROOM DETAILS

PROJECT: GRANADA HILLS POOL AND BATHHOUSE REPLACEMENT PROJECT

ADDRESS: 16730 CHATSWORTH STREET GRANADA HILLS, CA 91344

WORK ORDER NO. #E170517

PLAN FILE NO.

DRAWING NO. MR-2
SHEET O F SHEETS

BID SET
PROJECT ISSUE DATE: 06/22/21

PLOTTED: 6/26/2018 2:53:10 PM

THE CITY OF LOS ANGELES OR ITS OFFICERS OR AGENTS SHALL NOT BE RESPONSIBLE FOR THE ACCURACY OR COMPLETENESS OF ELECTRONIC COPIES OF THIS PLAN SHEET.

REVISION DATES (DESIGN STAGE ONLY)

TTLB TEMPLATE REVISION DATE: 02/2013
SHEET ISSUE DATE: 12/01/19
FILE PATH: BIM 360://Granada Hills Pool Renovation/A_Granada-Hills_2017.rvt

THE CITY OF LOS ANGELES OR ITS OFFICERS OR AGENTS SHALL NOT BE RESPONSIBLE FOR THE ACCURACY OR COMPLETENESS OF ELECTRONIC COPIES OF THIS PLAN SHEET.

TTLB TEMPLATE REVISION DATE: 02/2013
SHEET ISSUE DATE: 12/01/19
FILE PATH: BIM 360://Granada Hills Pool Renovation/A_Granada-Hills_2017.rvt

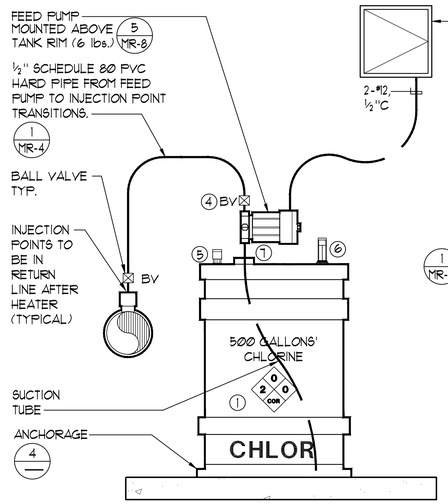

NOTES:

1. ABOVEGROUND STATIONARY TANKS USED FOR THE STORAGE OF HAZARDOUS MATERIALS SHALL BE PLACARDED WITH HAZARD IDENTIFICATION SIGNS AS SPECIFIED IN C.F.C. STANDARD 79-3 FOR THE SPECIFIC MATERIAL CONTAINED. SIGNS SHALL BE DURABLE. THE SIZE, COLOR AND LETTERING SHALL BE IN ACCORDANCE WITH NATIONALLY RECOGNIZED STANDARDS.
2. (1 MR-4) PIPING, TUBING, VALVES AND RELATED COMPONENTS SHALL BE SEISMIC BRACED.
3. PIPING AND TUBING SHALL BE IDENTIFIED TO INDICATE THE MATERIAL CONVEYED.
4. EMERGENCY SHUTOFF VALVES SHALL BE IDENTIFIED AND THE LOCATION SHALL BE CLEARLY VISIBLE AND INDICATED BY MEANS OF A SIGN.
5. PROVIDE 2" 'CAMLOCK' FILL PORT PER VENDOR'S REQUIREMENTS.
6. 'AT-A-GLANCE' CHEMICAL GUAGE BY KRUEGER SENTRY GAUGE CO. INC.
7. PROVIDE VAPORLOC CAP @ TUBING ENTRANCE
8. PIPING, VALVING AND FITTINGS SHALL COMPLY WITH CFC 2703.2.2

1 SODIUM HYPOCHLORITE FEED SCHEMATIC — NO SCALE

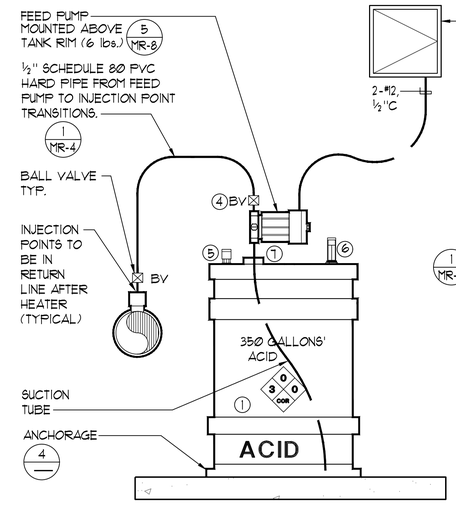

NOTES:

1. ABOVEGROUND STATIONARY TANKS USED FOR THE STORAGE OF HAZARDOUS MATERIALS SHALL BE PLACARDED WITH HAZARD IDENTIFICATION SIGNS AS SPECIFIED IN C.F.C. STANDARD 79-3 FOR THE SPECIFIC MATERIAL CONTAINED. SIGNS SHALL BE DURABLE. THE SIZE, COLOR AND LETTERING SHALL BE IN ACCORDANCE WITH NATIONALLY RECOGNIZED STANDARDS.
2. (1 MR-4) PIPING, TUBING, VALVES AND RELATED COMPONENTS SHALL BE SEISMIC BRACED.
3. PIPING AND TUBING SHALL BE IDENTIFIED TO INDICATE THE MATERIAL CONVEYED.
4. EMERGENCY SHUTOFF VALVES SHALL BE IDENTIFIED AND THE LOCATION SHALL BE CLEARLY VISIBLE AND INDICATED BY MEANS OF A SIGN.
5. PROVIDE 2" 'CAMLOCK' FILL PORT PER VENDOR'S REQUIREMENTS.
6. 'AT-A-GLANCE' CHEMICAL GUAGE BY KRUEGER SENTRY GAUGE CO. INC.
7. PROVIDE VAPORLOC CAP @ TUBING ENTRANCE
8. PIPING, VALVING AND FITTINGS SHALL COMPLY WITH CFC 2703.2.2

2 MURIATIC ACID FEED SCHEMATIC — NO SCALE

NOTES:

1. SEAL NON-VENTED MANWAY AND PERMANENTLY CLOSE.
2. PROVIDE CAMLOCK FITTING FOR FILL HOSE.
3. PROVIDE 2" BULKHEAD FITTING.
4. PROVIDE 2" BALL CHECK VALVE.
5. PROVIDE DOUBLE WALLED DUAL CONTAINMENT TANK.
6. PROVIDE ¾"x100' HOSE W/ NON-CORROSIVE ENDS.
7. PROVIDE 2" BULKHEAD FITTING WITH 'VAPORLOC' SYSTEM FOR FEED PUMP SUCTION LINES(5).
8. PROVIDE 'AT-A-GLANCE CHEMICAL GAUGE' BY KRUEGER SENTRY GAUGE CO. INC.

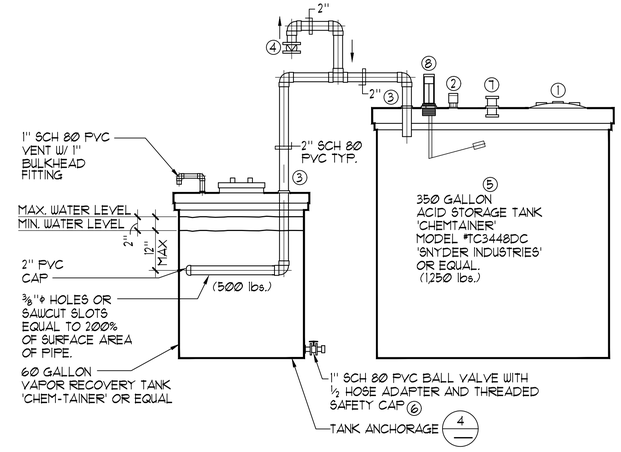

3 VAPOR RECOVERY TANK — 1/16"=1'-0"

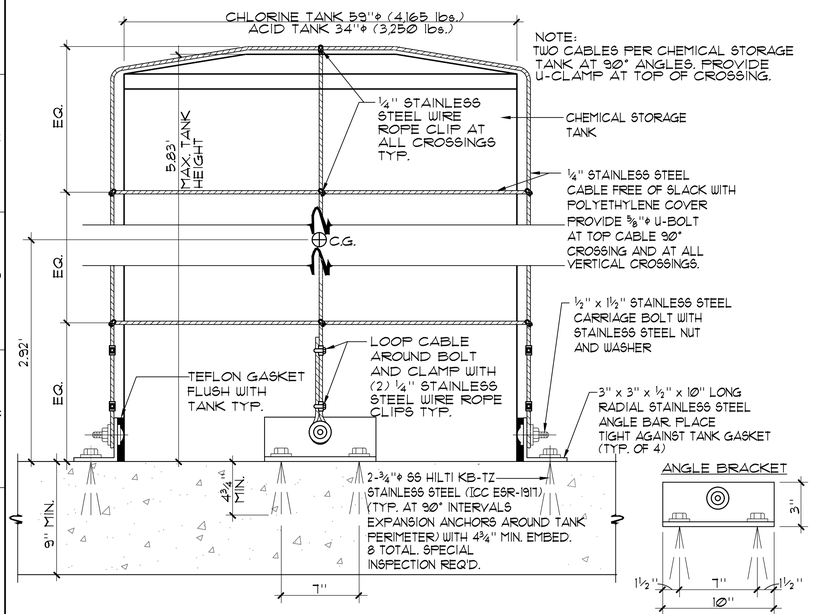

4 CHEMICAL TANK ANCHOR (TYP. 3 TANKS) — NO SCALE

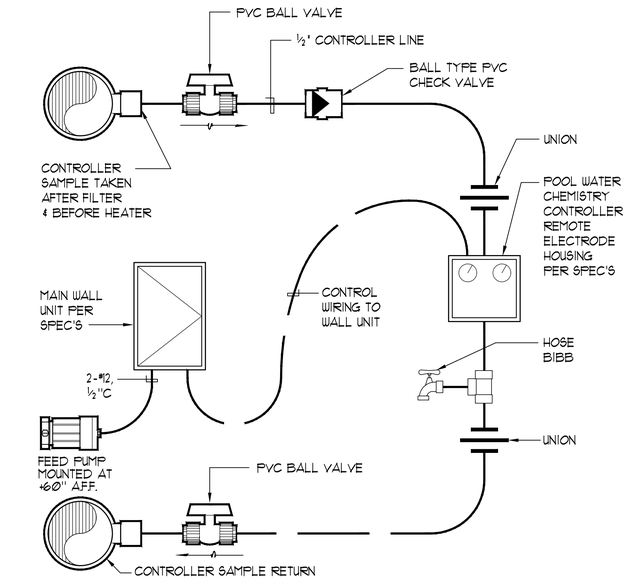

5 WATER CHEMISTRY CONTROLLER SCHEMATIC — NO SCALE

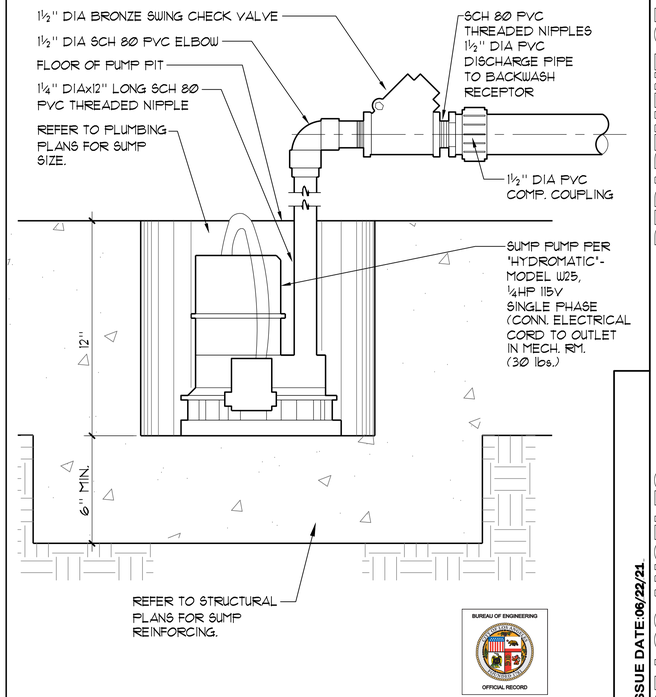

6 SUMP PUMP AT PUMP PIT — NO SCALE

BUREAU OF ENGINEERING OFFICIAL RECORD

BID SET
PROJECT ISSUE DATE: 06/22/21

CITY OF LOS ANGELES
DEPARTMENT OF PUBLIC WORKS
BUREAU OF ENGINEERING

AQUATIC DESIGN GROUP
2220 Faraday Ave, Carlsbad, CA 92008
AquaticDesignGroup.com
760-438-2400

ENGINEERING
CITY OF LOS ANGELES

NO.	REVISION DESCRIPTION	DATE	BY

BUILDING NO. -
INDEX NO. RP-300118

LICENSED ARCHITECT FORREST SMITH C-26222 REN 12/31/21 STATE OF CALIFORNIA

CITY ENGINEER
DATE:
12/01/2019
LIC. NO. C-26222

GARY LEE MOORE, PE, ENV SP
ARCHITECTURAL DIVISION

ARCHITECT/ENGINEER: SJF
DESIGNED BY: SJF
DRAWN BY: GSF
CHECKED BY: SJF
APPROVED BY: SJF

VERTICAL CONTROL:
HORIZONTAL CONTROL:

SHEET TITLE: MECHANICAL ROOM DETAILS

PROJECT: GRANADA HILLS POOL AND BATHHOUSE REPLACEMENT PROJECT
ADDRESS: 16730 CHATSWORTH STREET GRANADA HILLS, CA 91344

WORK ORDER NO. #E170517
PLAN FILE NO.
DRAWING NO. MR-3
SHEET O F SHEETS

PLOTTED: 6/25/2018 2:53:10 PM

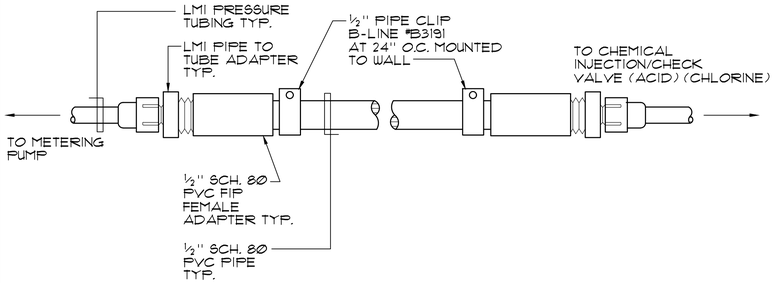

1 CHEMICAL FEED PIPING DETAIL

NO SCALE

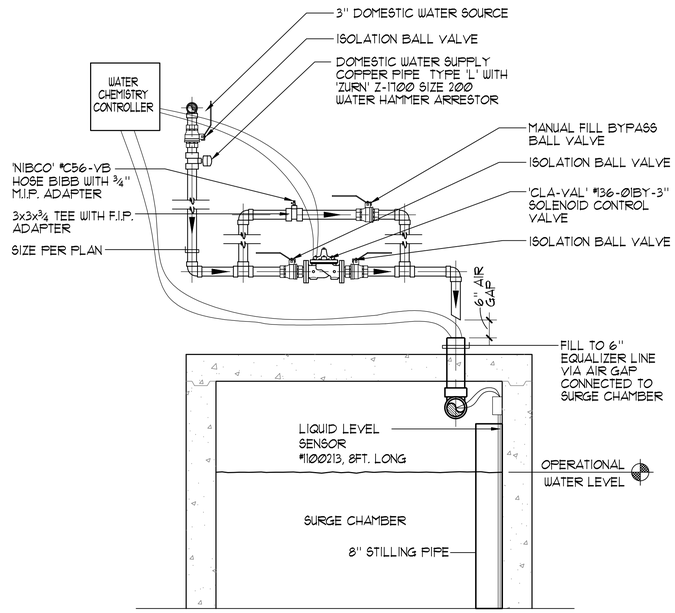

2 AUTOMATIC/MANUAL WATER MAKE-UP SCHEMATIC

NO SCALE

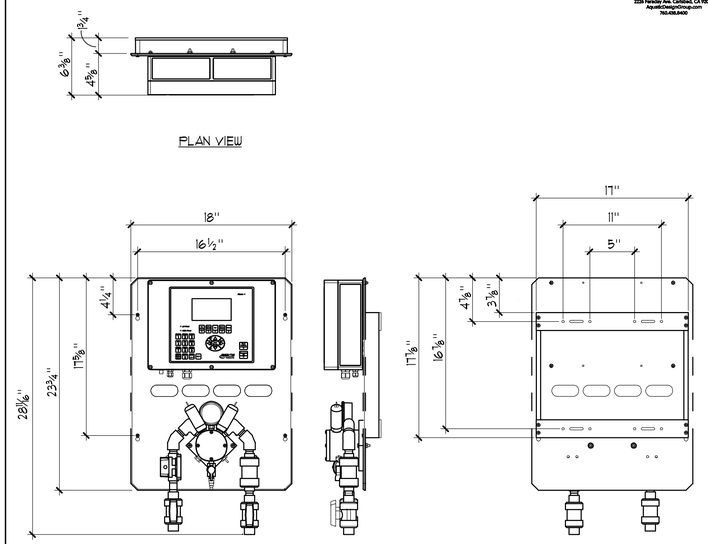

3 WATER CHEMISTRY CONTROLLER

1½''=1'-0''

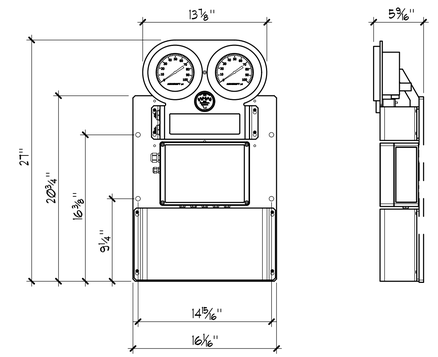

4 FILTER INTERFACE SYSTEM

1½''=1'-0''

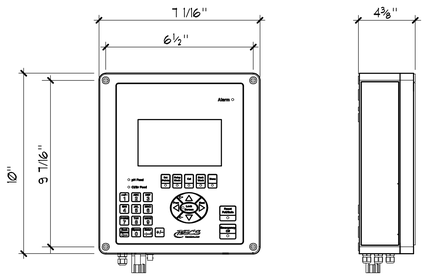

5 WET PLAY WATER CHEMISTRY CONTROLLER

1½''=1'-0''

BUREAU OF ENGINEERING
OFFICIAL RECORD

AQUATIC DESIGN GROUP
2226 Faraday Ave, Carlsbad, CA 92008
AquaticDesignGroup.com
760-438-2430

ENGINEERING
CITY OF LOS ANGELES

BUREAU OF ENGINEERING

NO.	REVISION DESCRIPTION	DATE	BY

BUILDING NO. -

INDEX NO. RP-300118

LICENSED ARCHITECT FOREIGN STATE OF CALIFORNIA C-26222 REN. 08/31/21

DEPARTMENT OF PUBLIC WORKS

CITY OF LOS ANGELES

		DATE:
CITY ENGINEER		
VERTICAL CONTROL:		
HORIZONTAL CONTROL:		
ARCHITECT/ENGINEER:	SJF	12/01/2019
DESIGNED BY:	SJF	12/01/2019
DRAWN BY:	GSF	12/01/2019
CHECKED BY:	SJF	12/01/2019
APPROVED BY:	SJF	12/01/2019

GARY LEE MOORE, PE, ENV SP
ARCHITECTURAL DIVISION
LIC. NO.: C-26222

SHEET TITLE: MECHANICAL ROOM DETAILS

PROJECT: GRANADA HILLS POOL AND BATHHOUSE REPLACEMENT PROJECT

ADDRESS: 16730 CHATSWORTH STREET GRANADA HILLS, CA 91344

WORK ORDER NO. #E170517

PLAN FILE NO.

DRAWING NO. MR-4

SHEET O F SHEETS

BID SET
PROJECT ISSUE DATE:06/22/21

PLOTTED:6/26/2018 2:53:10 PM

THE CITY OF LOS ANGELES OR ITS OFFICERS OR AGENTS SHALL NOT BE RESPONSIBLE FOR THE ACCURACY OR COMPLETENESS OF ELECTRONIC COPIES OF THIS PLAN SHEET.

TTLB TEMPLATE REVISION DATE: 02/2013
SHEET ISSUE DATE: 12/01/19
FILE PATH: BIM 360://Granada Hills Pool Renovation/A_Granada-Hills_2017.rvt

REVISION DATES (DESIGN STAGE ONLY)

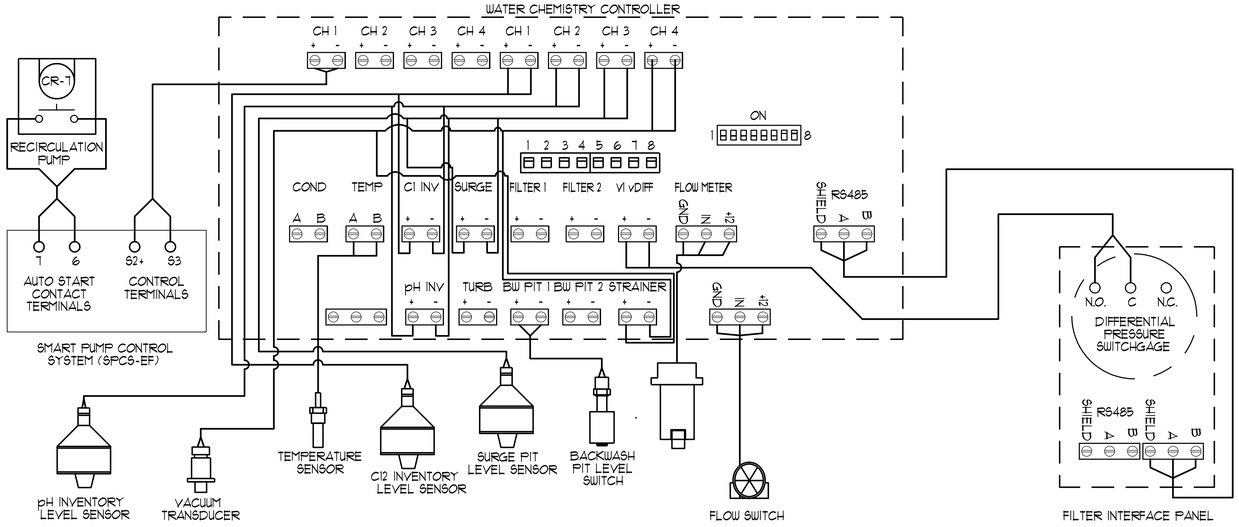

1 **WATER CHEMISTRY CONTROLLER RELAY INPUTS** NO SCALE

RELAY LEGEND
RELAY 1 = pH FEED
RELAY 2 = CHLORINE FEED
RELAY 3 = ALARM OUTPUT
RELAY 4 = HEATER
RELAY 5 = SENSOR WASH
RELAY 6 = FILTER BACKWASH OUTPUT
RELAY 7 = RECIRC PUMP

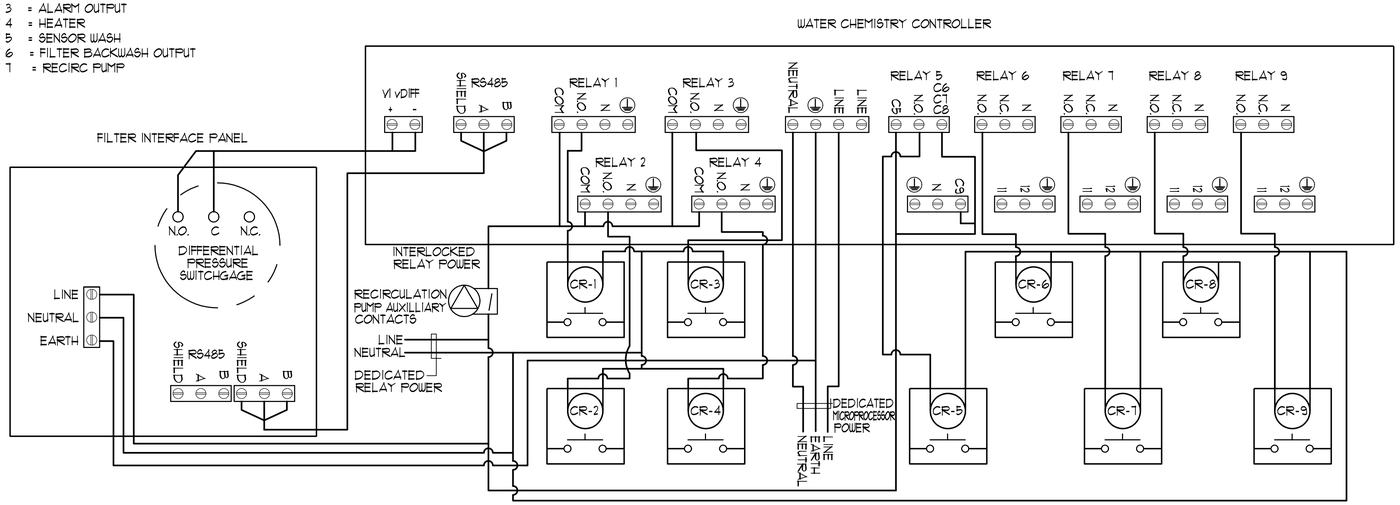

2 **WATER CHEMISTRY CONTROLLER RELAY OUTPUTS** NO SCALE

AQUATIC DESIGN GROUP

BUREAU OF ENGINEERING

ENGINEERING
CITY OF LOS ANGELES

NO.	REVISION DESCRIPTION	DATE	BY

BUILDING NO. -

INDEX NO. RP-300118

LICENSED ARCHITECT SCOTT J. FERRELL C-26222 REN. 12/31/21 STATE OF CALIFORNIA

DEPARTMENT OF PUBLIC WORKS

GARY LEE MOORE, PE, ENV SP
ARCHITECTURAL DIVISION
CITY ENGINEER

		DATE:
ARCHITECT/ENGINEER:	SJF	12/01/2019
DESIGNED BY:	SJF	12/01/2019
DRAWN BY:	GSF	12/01/2019
CHECKED BY:	SJF	12/01/2019
APPROVED BY:	SJF	12/01/2019

CITY OF LOS ANGELES

VERTICAL CONTROL:
HORIZONTAL CONTROL:

SHEET TITLE: MECHANICAL ROOM DETAILS

PROJECT: GRANADA HILLS POOL AND BATHHOUSE REPLACEMENT PROJECT

ADDRESS: 16730 CHATSWORTH STREET GRANADA HILLS, CA 91344

WORK ORDER NO. #E170517

PLAN FILE NO.

DRAWING NO. MR-5

SHEET OF SHEETS

BID SET
PROJECT ISSUE DATE:06/22/21

PLOTTED:6/26/2018 2:53:10 PM

THE CITY OF LOS ANGELES OR ITS OFFICERS OR AGENTS SHALL NOT BE RESPONSIBLE FOR THE ACCURACY OR COMPLETENESS OF ELECTRONIC COPIES OF THIS PLAN SHEET.

TTLB TEMPLATE REVISION DATE: 02/2013
SHEET ISSUE DATE: 12/01/19
FILE PATH: BIM 360://Granada Hills Pool Renovation/A_Granada-Hills_2017.rvt

REVISION DATES (DESIGN STAGE ONLY)

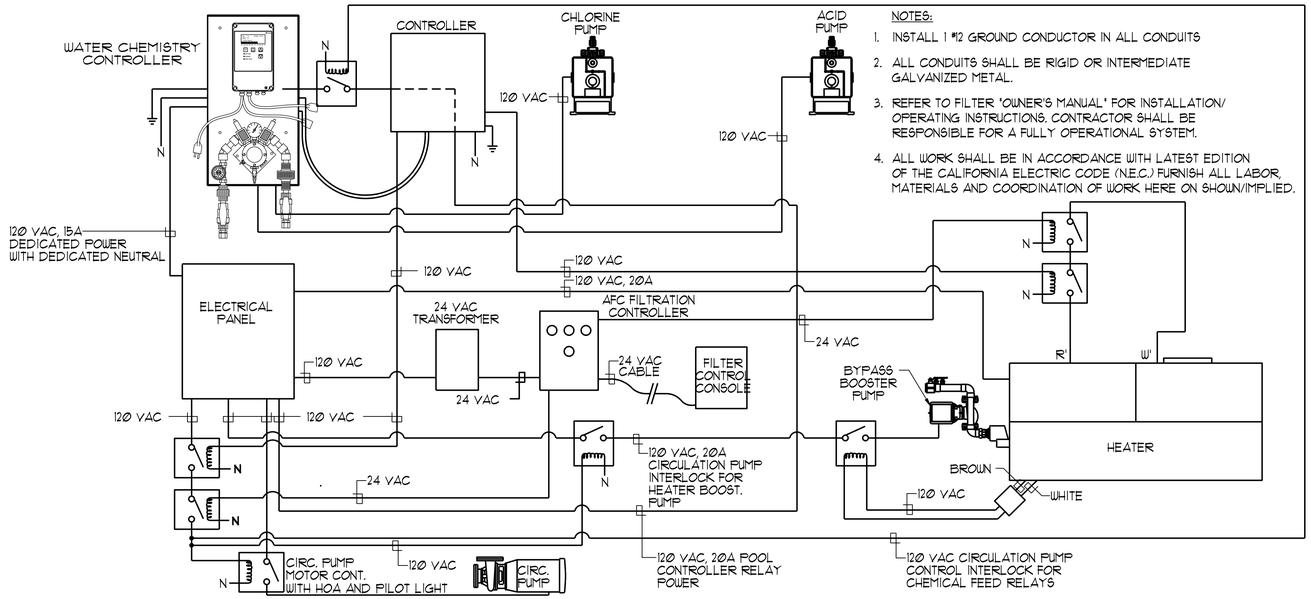

NOTES:

1. INSTALL 1 #12 GROUND CONDUCTOR IN ALL CONDUITS
2. ALL CONDUITS SHALL BE RIGID OR INTERMEDIATE GALVANIZED METAL.
3. REFER TO FILTER 'OWNER'S MANUAL' FOR INSTALLATION/ OPERATING INSTRUCTIONS. CONTRACTOR SHALL BE RESPONSIBLE FOR A FULLY OPERATIONAL SYSTEM.
4. ALL WORK SHALL BE IN ACCORDANCE WITH LATEST EDITION OF THE CALIFORNIA ELECTRIC CODE (N.E.C.) FURNISH ALL LABOR, MATERIALS AND COORDINATION OF WORK HERE ON SHOWN/IMPLIED.

1 POOL MECHANICAL ELECTRICAL INTERCONNECTION DIAGRAM

NO SCALE

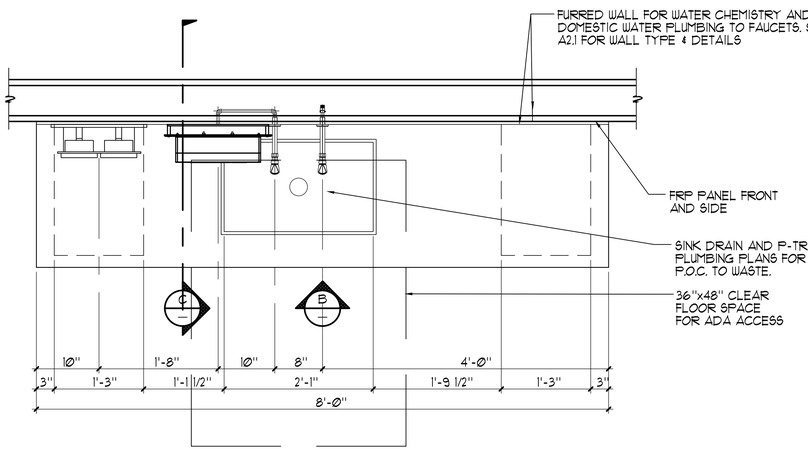

A PLAN VIEW

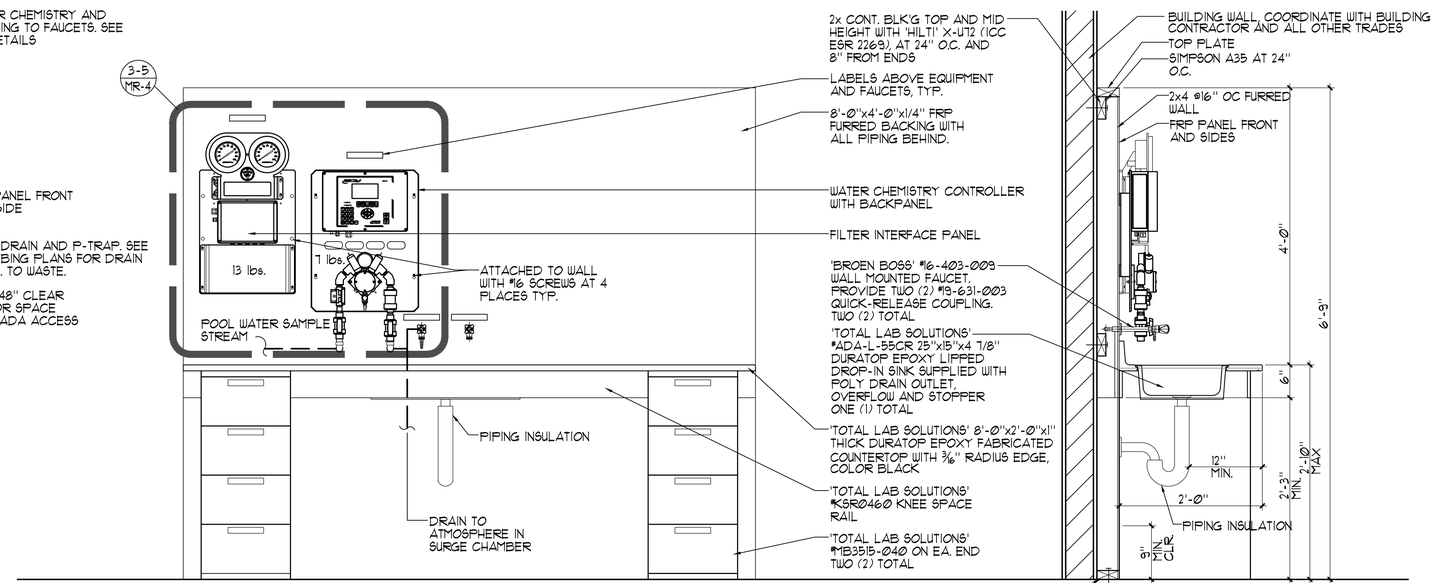

B FRONT ELEVATION

C SIDE SECTION

2 POOL OPERATOR WORKSTATION DESK DETAIL

1"=1'-0"

THE CITY OF LOS ANGELES OR ITS OFFICERS OR AGENTS SHALL NOT BE RESPONSIBLE FOR THE ACCURACY OR COMPLETENESS OF ELECTRONIC COPIES OF THIS PLAN SHEET.

TTLB TEMPLATE REVISION DATE: 02/2013
SHEET ISSUE DATE: 12/01/19
FILE PATH: BIM 360://Granada Hills Pool Renovation/A_Granada-Hills_2017.rvt

REVISION DATES (DESIGN STAGE ONLY)

AQUATIC DESIGN GROUP
2228 Faraday Ave, Carlsbad, CA 92008
AquaticDesignGroup.com
760.438.2400

BUREAU OF ENGINEERING
OFFICIAL RECORD

ENGINEERING
CITY OF LOS ANGELES

BUREAU OF ENGINEERING

NO.	REVISION DESCRIPTION	DATE	BY

BUILDING NO. -

INDEX NO. RP-300118

LICENSED ARCHITECT FOREIGN STATE OF CALIFORNIA C-28222 REN. 08/31/21

DEPARTMENT OF PUBLIC WORKS

CITY ENGINEER

	DATE:
	12/01/2019
	12/01/2019
	12/01/2019
	12/01/2019
	12/01/2019

GARY LEE MOORE, PE, ENV SP
LIC. NO.: C-28222
ARCHITECTURAL DIVISION

ARCHITECT/ENGINEER:	SJF
DESIGNED BY:	SJF
DRAWN BY:	GSF
CHECKED BY:	SJF
APPROVED BY:	SJF

CITY OF LOS ANGELES

VERTICAL CONTROL:
HORIZONTAL CONTROL:

SHEET TITLE: MECHANICAL ROOM DETAILS

PROJECT: GRANADA HILLS POOL AND BATHHOUSE REPLACEMENT PROJECT

ADDRESS: 16730 CHATSWORTH STREET GRANADA HILLS, CA 91344

BID SET
PROJECT ISSUE DATE: 06/22/21

WORK ORDER NO. #E170517

PLAN FILE NO.

DRAWING NO. MR-6
SHEET O F SHEETS

PLOTTED: 6/26/2018 2:53:10 PM

DESIGNATION:	VOLTAGE: 120/208V 3PH 4W				LOCATION: MECHANICAL EQUIP. RM.				
'SP'	200AMP ☒MAIN BREAKER ☐MAIN LUG				MINIMUM DEVICE A.I.C. RATING	☒10,000 ☐14,000	PANELBOARD KEY NOTES		
	☐RECESSED ☒SURFACE						① ◯ ◯ ◯		

DESCRIPTION:	C/B	CIR NO.	ϕ A	ϕ B	ϕ C	CIR NO.	C/B	DESCRIPTION:
SP UNDERWATER LIGHTS	20/1	1	609 1200			2	20/1	SP FILTER AFC
		3		696 1200		4		SP WATER CHEM CONTROLLER
		5			609 1200	6		SP PRESS AMP SYS.
		7	696 360			8		SP CIRC PUM INTERCONN.
SP DECK RECEPTACLES		9		720 360		10		SP CIRC PUMP HTR CONTROL
		11			720 360	12		SP WATER CHEM RELAY
		13	720 1440			14		SP HEATER
SP TIMING SCOREBOARD		15		720 1440		16		SP HEATER
		17			720 1200	18		WP WATER CHEM CONTROL
		19	720 1200			20		WP WET PLAY CONTROLLER
		21		720 720		22		WP HEATER
SPARE		23			720 1300	24		WP ULTRAVIOLET
WP CIRC PUMP	30/3	25	1272 960			26		WP CHLORINE FEED
3HP		27		1272 720		28		WP ACID FEED
		29			1272 1056	30	20/2	SP CHLORINE FEED PUMP
WP BOOSTER PUMP	20/3	31	900 1056			32	20/2	1 HP
2HP		33		900 720		34	20/1	SPARES
		35			900 720	36	20/1	
SPACE		37	–			38		
		39		–		40		
		41			–	42		
TOTAL PER PHASE			11,133	10,188	10,777			13,117 ÷ 120V = 110 AMPS
+ 25% L.C.L.			1,829	1,737	2,340			
TOTAL			12,962	11,925	13,117			

① GFI CIRCUIT SP = SWIMMING POOL WP = WET PLAY

1 PANEL SCHEDULE

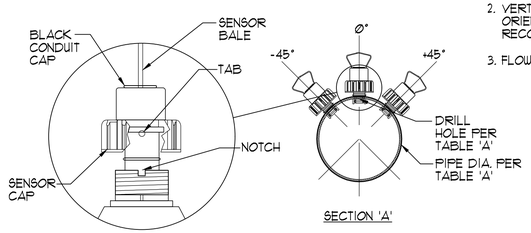

SECTION 'A'

NOTES:
1. HORIZONTAL PIPE RUNS: MOUNT SENSOR IN -45°, Ø°, OR +45° POSITION PER MANUFACTURER'S RECOMMENDATIONS.
2. VERTICAL PIPE RUNS: MOUNT SENSOR IN ANY ORIENTATION PER MANUFACTURER'S RECOMMENDATIONS.
3. FLOW SENSOR LOCATION PER PLAN

SIGNET 515 - TABLE 'A'		
PIPE DIA.	FLOWSENSOR LENGTH	DRILL HOLE
½" THRU 4"	4.1"	1⅞"
5" THRU 8"	5.4"	2¼"
10" AND UP	8.4"	2¼"

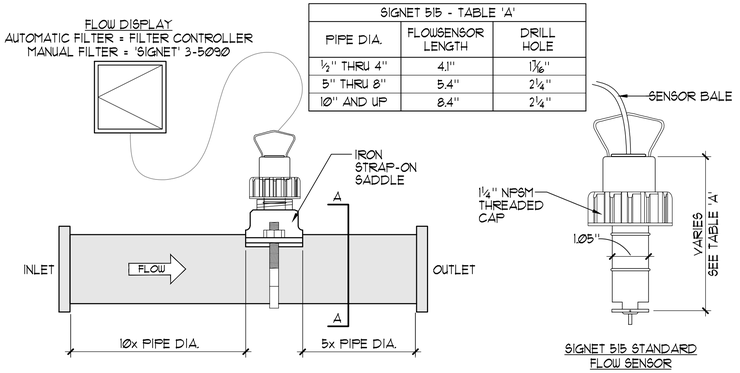

SIGNET 515 STANDARD FLOW SENSOR

2 SIGNET FLOWMETER NO SCALE

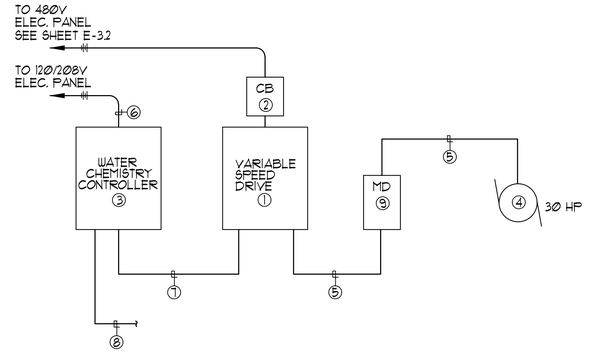

NOTES:
① VARIABLE SPEED DRIVE MOTOR CONTROL CABINET, SEE PLANS AND SPECIFICATIONS.
② ENCLOSED CIRCUIT BREAKER, SEE SINGLE LINE DIAGRAM.
③ WATER CHEMISTRY/FILTER CONTROL UNIT, SEE PLANS.
④ CONNECT TO CIRCULATION PUMP MOTOR, SEE PLANS.
⑤ MOTOR FEEDERS, SEESINGLE LINE DIAGRAM.
⑥ 120 VOLT BRANCH CIRCUITS, SEE PLANS.
⑦ ¾"C, (4) #12, (1) #12 GND. (120 VOLT CONTROL WIRING)
⑧ 24 VOLT SIGNAL AND SENSOR CABLING, SEE SPECIFICATIONS AND INSTALLATION INSTRUCTIONS FOR ADDITIONAL REQUIREMENTS.
⑨ MOTOR DISCONNECT, SEE PLANS.

3 WIRING SCHEMATIC VARIABLE SPEED DRIVE UNIT NO SCALE

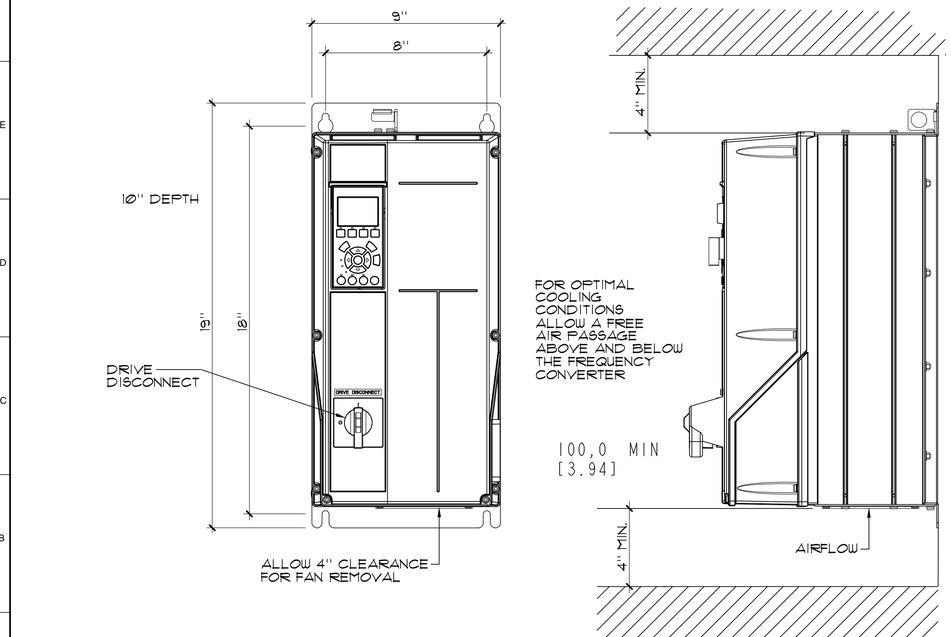

4 ACUDRIVE ENCLOSURE LAYOUT NO SCALE

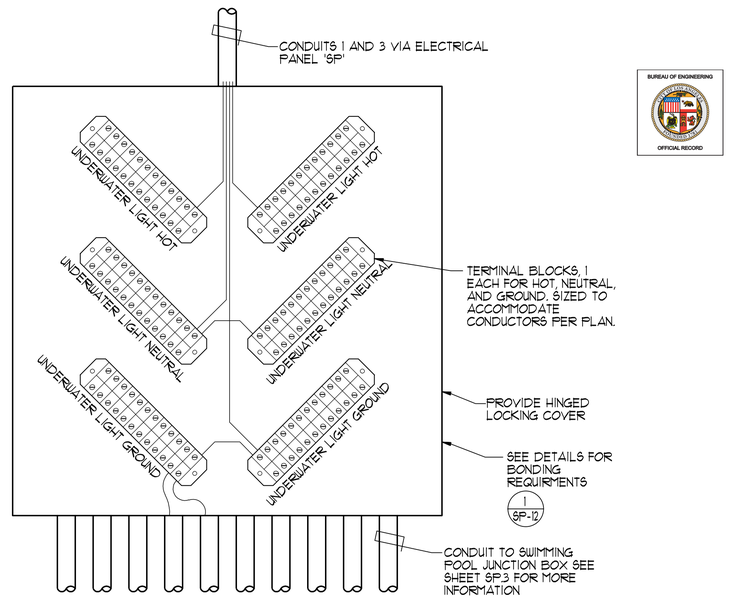

BUREAU OF ENGINEERING OFFICIAL RECORD

5 UNDERWATER LIGHT CONTACTOR PANEL NO SCALE

THE CITY OF LOS ANGELES OR ITS OFFICERS OR AGENTS SHALL NOT BE RESPONSIBLE FOR THE ACCURACY OR COMPLETENESS OF ELECTRONIC COPIES OF THIS PLAN SHEET.

TTLB TEMPLATE REVISION DATE: 02/2013
SHEET ISSUE DATE: 12/01/19
FILE PATH: BIM 360://Granada Hills Pool Renovation/A_Granada-Hills_2017.rvt

REVISION DATES (DESIGN STAGE ONLY)

AQUATIC DESIGN GROUP
2228 Faraday Ave, Carlsbad, CA 92008
AquaticDesignGroup.com
760-438-2430

BUREAU OF ENGINEERING
CITY OF LOS ANGELES

NO.	REVISION DESCRIPTION	DATE	BY

BUILDING NO. -
INDEX NO. RP-300118

LICENSED ARCHITECT GREGORY S. FORREST C-28222 REN. 08/31/21 STATE OF CALIFORNIA

DEPARTMENT OF PUBLIC WORKS
CITY OF LOS ANGELES

CITY ENGINEER: DATE:
VERTICAL CONTROL: 12/01/2019
HORIZONTAL CONTROL: 12/01/2019
12/01/2019
12/01/2019
12/01/2019
12/01/2019

GARY LEE MOORE, PE, ENV SP
ARCHITECTURAL DIVISION
LIC. NO.: C-28222

ARCHITECT/ENGINEER: SJF
DESIGNED BY: SJF
DRAWN BY: GSF
CHECKED BY: SJF
APPROVED BY: SJF

SHEET TITLE: MECHANICAL ROOM DETAILS
PROJECT: GRANADA HILLS POOL AND BATHHOUSE REPLACEMENT PROJECT
ADDRESS: 16730 CHATSWORTH STREET GRANADA HILLS, CA 91344

WORK ORDER NO. #E170517
PLAN FILE NO.
DRAWING NO. MR-7
SHEET O F SHEETS

BID SET
PROJECT ISSUE DATE: 06/22/21

PLOTTED: 6/26/2018 2:53:10 PM

THE CITY OF LOS ANGELES OR ITS OFFICERS OR AGENTS SHALL NOT BE RESPONSIBLE FOR THE ACCURACY OR COMPLETENESS OF ELECTRONIC COPIES OF THIS PLAN SHEET.

FILE PATH: BIM 360://Granada Hills Pool Renovation/A_Granada-Hills_2017.rvt
TTLB TEMPLATE REVISION DATE: 02/2013
SHEET ISSUE DATE: 12/01/19

REVISION DATES (DESIGN STAGE ONLY)

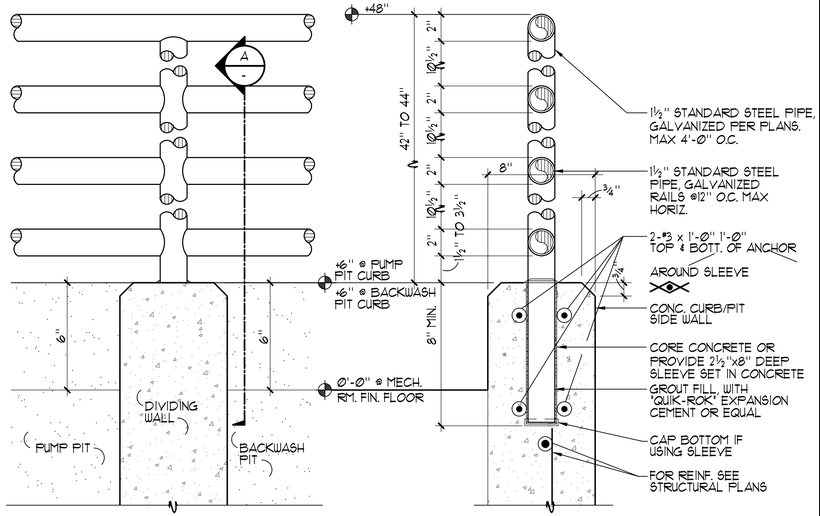

ELEVATION AT PIT DIVIDING WALL

A GUARD RAIL SECTION

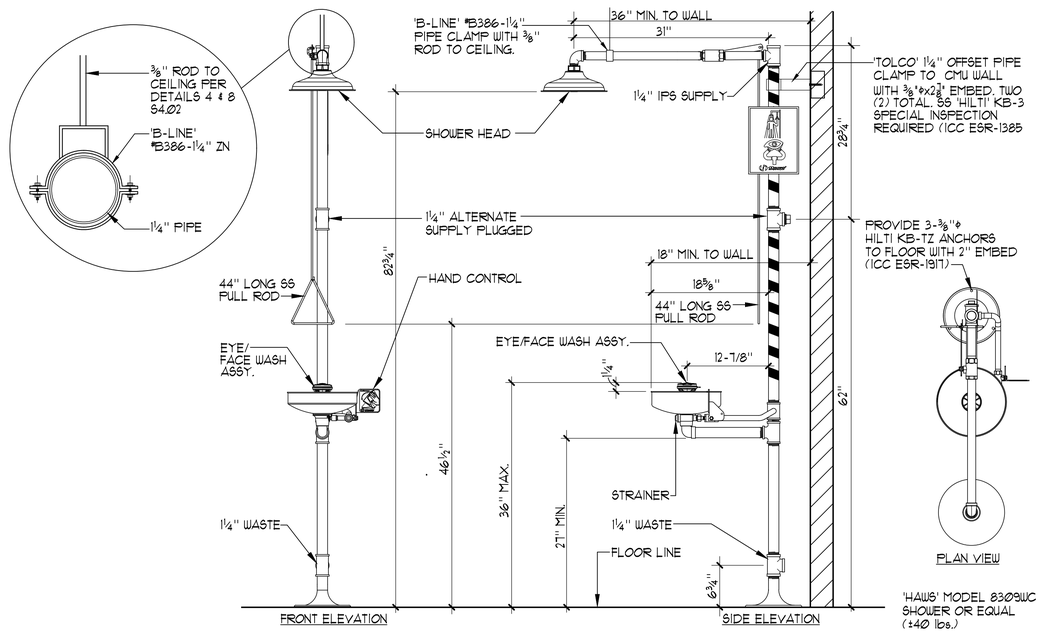

1 PIT GUARD RAIL 3"=1'-Ø"

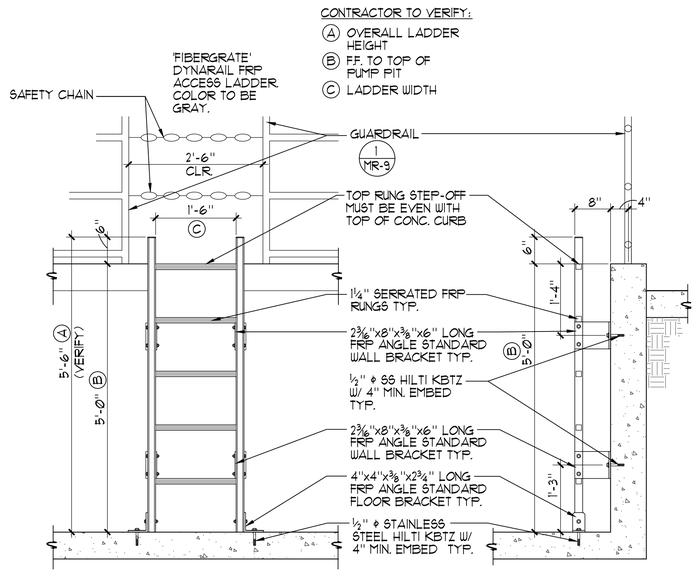

1 FRONT ELEVATION

2 SIDE ELEVATION

2 TYPICAL EYEWASH/SHOWER DETAIL NO SCALE

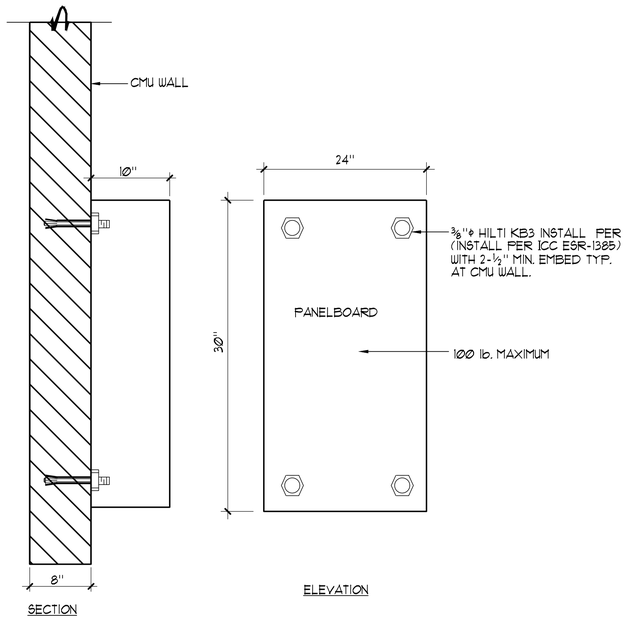

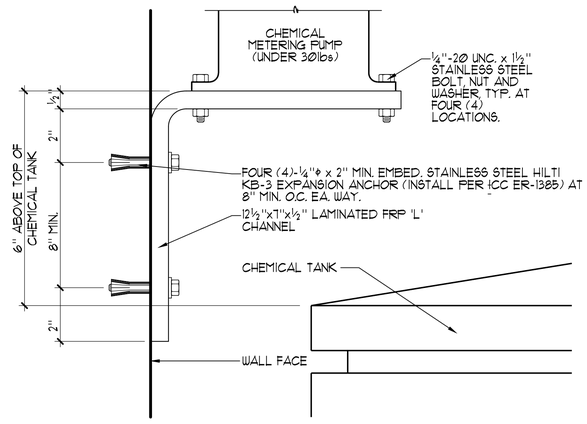

3 PUMP PIT ACCESS LADDER ¾"=1'-Ø"

4 PANELBOARD MOUNTING DETAIL NO SCALE

5 CHEMICAL PUMP SHELF 6"=1'-Ø"

BUREAU OF ENGINEERING
OFFICIAL RECORD

AQUATIC DESIGN GROUP
2220 Faraday Ave, Carlsbad, CA 92008
AquaticDesignGroup.com
760-438-2400

ENGINEERING
CITY OF LOS ANGELES

DEPARTMENT OF PUBLIC WORKS
BUREAU OF ENGINEERING

NO.	REVISION DESCRIPTION	DATE	BY

BUILDING NO. -

INDEX NO. RP-300118

LICENSED ARCHITECT FIONA L. GOSS C-28222 REN. 08/31/21 STATE OF CALIFORNIA

CITY ENGINEER DATE:
12/01/2019
12/01/2019
12/01/2019
12/01/2019
12/01/2019

GARY LEE MOORE, PE, ENV SP
CITY ENGINEER

ARCHITECT/ENGINEER: SJF LIC. NO.: C-28222
ARCHITECTURAL DIVISION
DESIGNED BY: SJF
DRAWN BY: GSF
CHECKED BY: SJF
APPROVED BY: SJF

VERTICAL CONTROL:
HORIZONTAL CONTROL:

SHEET TITLE: MECHANICAL ROOM DETAILS

PROJECT: GRANADA HILLS POOL AND BATHHOUSE REPLACEMENT PROJECT

ADDRESS: 16730 CHATSWORTH STREET GRANADA HILLS, CA 91344

BID SET
PROJECT ISSUE DATE:06/22/21.

CITY OF LOS ANGELES

WORK ORDER NO. #E170517
PLAN FILE NO.
DRAWING NO. MR-8
SHEET O F SHEETS

PLOTTED: 6/26/2018 2:53:10 PM

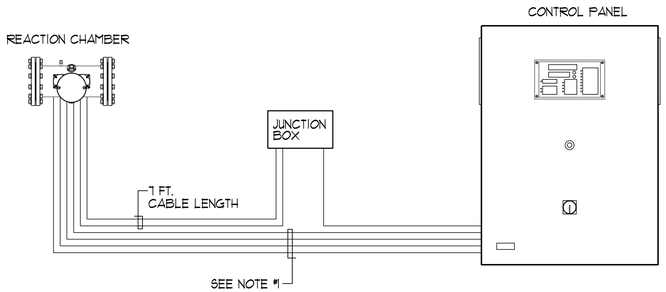

NOTES:

1. STANDARD CABLE LENGTH FROM REACTION CHAMBER TO CONTROL PANEL IS 15 FEET.
2. SEE PRODUCT SPECIFICATIONS FOR UV UNIT, CONTROL PANEL, AND JUNCTION BOX DIMENSIONS.

1 U.V. DISINFECTION UNIT TYPICAL INSTALLATION NO SCALE

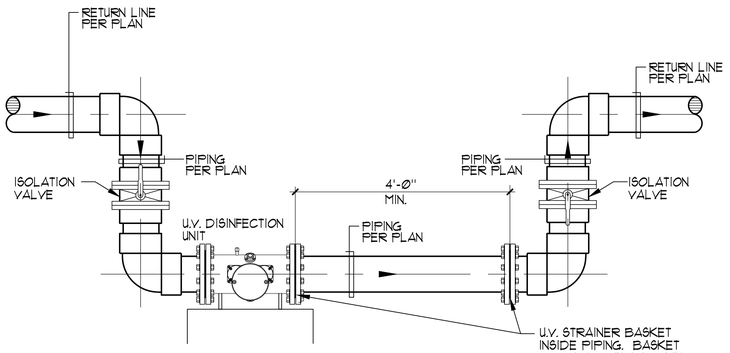

2 U.V. DISINFECTION UNIT INSTALATION DETAIL NO SCALE

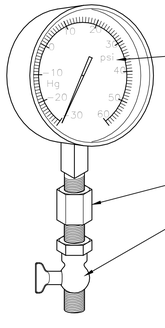

2½" S/S CASED LIQUID FILLED PRESSURE GAUGES SHALL HAVE A DIAL RANGE PRESSURE OF 60psi AND VACUUM RANGE OF 30" Hg THE MINOR GRADUATIONS SHALL HAVE A PRESSURE OF 2psi AND VACUUM OF 2" Hg, ¼" NPT PER SPECIFICATIONS.

SNUBBER

'PETCOCK' MODEL #A10, BRASS

NOTES:

1. PRESSURE GAUGES SHALL BE INSTALLED BY MEANS OF DRILLING AND TAPPING PIPE TO BE MONITORED. THE GAUGE SHALL THEN BE THREADED INTO THE PIPE. PROVIDE WITH SNUBBER AND PET COCK.
2. GAUGE MAY BE USED WHEREVER CRUCIAL VACUUM OR PRESSURE READINGS ARE ESSENTIAL.

3 PRESSURE/ VACUUM GAUGE 6"=1'-0"

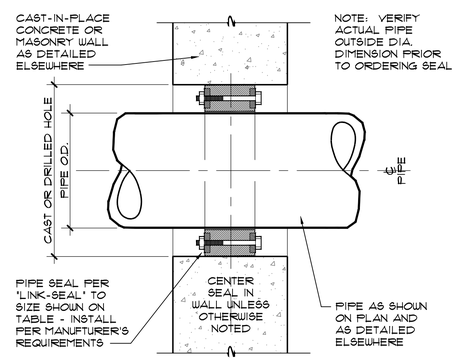

PIPE SIZE (NOMINAL)	OUTSIDE DIAMETER (PIPE O.D.)	CAST OR DRILLED CONCRETE HOLE NOSE DIA (I.D.)	LINK SEAL SIZE NO.	NO. OF LINKS PER SEAL
½"	0.840	2.0	L6-200	4
¾"	1.050	2.5	L6-275	5
1"	1.315	3.0	L6-300	4
1¼"	1.660	3.0	L6-275	7
1½"	1.900	3.5	L6-300	5
2"	2.375	4.0	L6-300	6
2½"	2.875	4.0	L6-200	9
3"	3.50	5.0	L6-300	8
3½"	4.00	6.0	L6-325	5
4"	4.50	6.0	L6-300	10
5"	5.563	8.0	L6-425	6
6"	6.625	10.0	L6-475	10
8"	8.625	12.0	L6-475	12
10"	10.75	14.0	L6-400	10
12"	12.75	16.0	L6-400	12
14"	14.00	16.0	L6-325	15
16"	16.00	18.0	L6-325	17
18"	18.00	23.0	L6-500	16
20"	20.00	25.0	L6-500	18
22"	22.00	27.0	L6-500	19
24"	24.00	29.0	L6-500	21
26"	26.00	31.0	L6-500	23
28"	28.00	33.0	L6-500	24
30"	30.00	35.0	L6-500	26
32"	32.00	37.0	L6-500	28
34"	34.00	39.0	L6-500	29
36"	36.00	41.0	L6-500	30

4 PIPE SEAL TO WALL / FLOOR NO SCALE

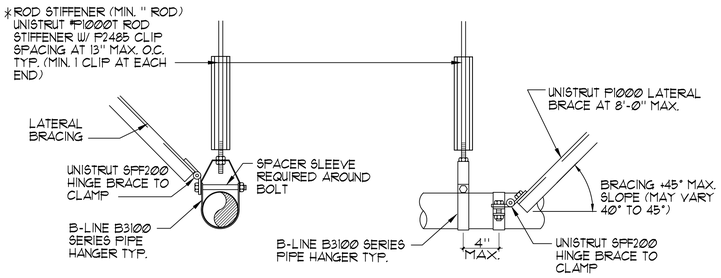

HANGER/BRACE PERPENDICULAR

NOTE:
REFER TO STRUCTURAL DRAWINGS S5/S1.4 & S1/S1.5 FOR CONNECTIONS TO ROOF STRUCTURAL SYSTEMS.

* HANGER ROD SIZES/TABLE

⅝"ϕ AT 4" PIPING MAX. ROD LENGTH = 30"
¾"ϕ AT 6" PIPING MAX. ROD LENGTH = 30"
¾"ϕ AT 8" PIPING MAX. ROD LENGTH = 30"
⅞" ϕ AT 12" PIPING MAX. ROD LENGTH = 30"

** MAX. PIPE HANGER SPACING

4" PIPING OR SMALLER = 4'-0" O.C.
6" PIPING = 6'-0" O.C.
8" PIPING = 6'-0" O.C.
12" PIPING = 8'-0" O.C.

HANGER/BRACE LONGITUDINAL

NOTES:

1. FOR COPPER TUBING USE COPPER PLATED OR PAINTED B3104CT, FELT LINED B3100F, OR PLASTIC COATED B3100C.
2. PROVIDE BRACING FOR EACH PIPE RUN IN TWO DIRECTIONS.
3. FOR ATTACHMENT OF HANGERS AND BRACING TO FRAMING ABOVE SEE STRUCTURAL PLAN S1.202 AND DETAILS 4 & 8 S.402.

**4. REFER TO MR-1 FOR PIPE HANGER LOCATIONS.

5 'UNISTRUT' PIPING HANGER/SUPPORT DETAILS NO SCALE

CHEMICAL CLASSIFICATION TABLE									
COMMON NAME	CHEMICAL NAME	% COMP.	CAS #	FORM	QUANT. STORED	QUANT. IN USE (OPEN/ CLOSED)	LOCATION (STORAGE & USE)	HAZ. CLASSES	JUSTIFICATION
SODIUM HYPOCHLORITE	SODIUM HYPOCHLORITE	12.5%	7681-52-9	LIQUID	500 GAL.	500 GAL.	MECH. ROOM	IRRITANT LIQUID	MSDS
MURIATIC ACID	HYDROCHLORIC ACID	25%	7647-01-0	LIQUID	150 GAL.	150 GAL.	CHEM. ROOM	CORROSIVE LIQUID	MSDS

QUANTITIES OF CHEMICALS DO NOT EXCEED THE QUANTITIES LISTED IN IBC TABLES 307.1 (1) AND 307.1 (2).

RATING EXPLANATION GUIDE					
RATING	HEALTH HAZARD	FLAMMABILITY HAZARD	REACTIVITY HAZARD	SPECIFIC HAZARD	
4	CAN BE LETHAL	EXTREMELY FLAMMABLE. IGNITES AT BELOW 73° F.	MAY EXPLODE AT NORMAL TEMPERATURES AND PRESSURES	OXIDIZER:	OX
				ACID:	ACID
3	CAN CAUSE SERIOUS OR PERMANENT INJURY	IGNITES AT ABOVE 73° F, BELOW 100° F.	MAY EXPLODE AT HIGH TEMPERATURES OR SHOCK	CORROSIVE:	COR
2	CAN CAUSE TEMPORARY INCAPACITATION OR RESIDUAL INJURY	IGNITES AT ABOVE 100° F, BELOW 200° F.	VIOLENT CHEMICAL CHANGE AT HIGH TEMPERATURES OR PRESSURES	ALKALI:	ALK
				USE NO WATER:	W
1	CAN CAUSE SIGNIFICANT IRRITATION	IGNITES AT ABOVE 200° F.	NORMALLY STABLE. HIGH TEMPERATURES MAKE UNSTABLE	RADIATION HAZARDS:	☢
0	NO HAZARD	WILL NOT BURN	STABLE	POLYMERIZES:	P

NOTES:

1. CONFIRM SIGNAGE WITH LOCAL FIRE MARSHALL AND/OR BUILDING CODES PRIOR TO INSTALLATION. SIGNS SHALL CONFORM TO NFPA 704.
2. SIGNS SHALL BE SIZES AND COLORS PER CODE MOUNTED AT +60" A.F.F. ON DOORS AT CHEMICAL ROOMS.

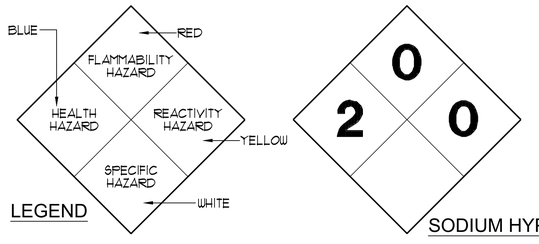

6 HAZARDOUS INFORMATION SIGNAGE NO SCALE

AQUATIC DESIGN GROUP
2229 Faraday Ave, Carlsbad, CA 92008
AquaticDesignGroup.com
760-438-2400

ENGINEERING
CITY OF LOS ANGELES

BUREAU OF ENGINEERING
DEPARTMENT OF PUBLIC WORKS
CITY OF LOS ANGELES

NO.	REVISION DESCRIPTION	DATE	BY

BUILDING NO. -
INDEX NO. RP-300118

LICENSED ARCHITECT GARY L. MOORE C-26222 REN. 08/31/21 STATE OF CALIFORNIA

CITY ENGINEER	DATE:
	12/01/2019
	12/01/2019
	12/01/2019
	12/01/2019
	12/01/2019

GARY LEE MOORE, PE, ENV SP
ARCHITECTURAL DIVISION
LIC. NO.: C-26222

ARCHITECT/ENGINEER:	SJF
DESIGNED BY:	SJF
DRAWN BY:	GSF
CHECKED BY:	SJF
APPROVED BY:	SJF

VERTICAL CONTROL:
HORIZONTAL CONTROL:

SHEET TITLE: MECHANICAL ROOM DETAILS

PROJECT: GRANADA HILLS POOL AND BATHHOUSE REPLACEMENT PROJECT

ADDRESS: 16730 CHATSWORTH STREET GRANADA HILLS, CA 91344

BID SET
PROJECT ISSUE DATE:06/22/21

BUREAU OF ENGINEERING OFFICIAL RECORD

WORK ORDER NO. #E170517
PLAN FILE NO.
DRAWING NO. MR-9
SHEET 0 OF SHEETS

PLOTTED:6/26/2018 2:53:10 PM

THE CITY OF LOS ANGELES OR ITS OFFICERS OR AGENTS SHALL NOT BE RESPONSIBLE FOR THE ACCURACY OR COMPLETENESS OF ELECTRONIC COPIES OF THIS PLAN SHEET.

TTLB TEMPLATE REVISION DATE: 02/2013
SHEET ISSUE DATE: 12/01/19
FILE PATH: BIM 360://Granada Hills Pool Renovation/A_Granada-Hills_2017.rvt

REVISION DATES: (DESIGN STAGE ONLY)

GENERAL NOTES:

APPLICABLE BUILDING CODE

1. All construction and workmanship shall conform to the following codes.
2. 2017 Los Angeles City Building Code (LABC).
3. This pole and foundation standard has been designed for lateral loads on the completed structure as follows:
4. Wind – ASCE 7–10; Vult = 110 mph (Exposure C); Vasd = 85 mph (Exposure C); Risk Category = II.
5. Maximum total effective area (EPA) for luminaires per pole class:
   - LSS60B – 5.4 SQ.FT.
6. Seismic: S_S = 2.301, S_1 = 0.768, S_{DS} = 1.534, S_{D1} = 0.768, Risk Category = II; I = 1.0; Site Class = D; R = 1.5; Seismic Category = E; C_S = 0.410 Strength Level typical; Seismic Force Resisting System = Non–Building Structures, not similar to Buildings; Analysis Procedure = Equivalent Lateral Force Procedure.
7. Maximum weight per luminaire: LED 400 = 40 pounds.

GENERAL CONSTRUCTION

8. These notes shall be used in conjunction with the plans and any discrepancies shall be brought to the attention of the Engineer.
9. Contractor must check all dimensions, clearances and job conditions before starting work. Engineer shall be notified immediately of any discrepancies or possible deficiencies.
10. The drawings and specifications represent the finished structure. All bracing, temporary supports, shoring, etc., is the sole responsibility of the Contractor. Observation visits to the job site by the Engineer do not include inspection of construction procedures. The Contractor is soley responsible for all construction methods and for safety conditions at the worksite. These visits shall not be construed as continuous and detailed inspections.
11. Design, material, equipment, and products other than those described below or indicated on the drawings may be considered for use, provided prior approval is obtained from the City of Los Angeles.
12. Installation shall comply with all applicable L.A. city zoning ordinances and its provisions.
13. All changes in approved plans shall be made by addenda or change orders approved by City of Los Angeles.
14. All tests and inspections shall be performed by an independent lab approved by City of Los Angeles.
15. Plans shall be accompanied by a fully dimensioned plot plan showing all buildings and proposed pole locations.

LIGHT POLE FOUNDATIONS

(FOUNDATIONS MUST COMPLY WITH PRE–INSPECTION REPORT AS APPLICABLE)

16. Reference Geotechnical Report: Prepared by The Los Angeles Department of Public works, Bureau of Engineering, Geotechnical Engineering Division, Dated 08/22/17 W.O. E170517A; GED file No. 17–074, and supplemental report dated 10/25/2018.
17. Allowable vertical bearing capacity: 23 kips for 30 inches diameter pier.
18. Allowable lateral soil bearing pressure: LPile analysis.
19. Allowable design soil capacities must be verified by Geotechnical Engineer.
20. If soft or questionable soil conditions are encountered during excavations, contact the Department for instructions before proceeding with the work.
21. Soil formations that will require special design considerations or excavation procedures may exist. Pole foundations will need to be analyzed according to the soil conditions that exist.
22. The Contractor must familiarize himself with the complete soil investigation (if any) and borings and contact the Geotechnical Engineer (as necessary) to understand the soil conditions and the possibility of ground water pumping and excavation stabilization of bracing during then pier base installation and placement of concrete backfill.
23. All precast bases and concrete backfill must bear on and against firm undisturbed soil, as determined by a Geotechnical Engineer.
24. All excavations must be free of debris and loose soil prior to foundation installation, and placement of concrete backfill. Casing may be required if caving occurs. In such case, approval by a Geotechnical Engineer is required. Put plywood collar around hole to prevent falling dirt from filling hole.
25. All excavations must be dry or concrete shall be placed by the tremie method in accordance with ACI standard 336. Concrete placed by the tremie method shall have a minimum ultimate strength of 1,000 psi greater than required under "concrete backfill" below, and a maximum slump of 8 inches.
26. Excavations shall be covered, fenced securely or provided with equivalent protection for hazards.

CONCRETE (CAST-IN-PLACE)

27. Concrete pier foundations with steel reinforcement shall attain a minimum ultimate compressive strength at 28 day test of 3,000 psi. Batch plant inspection not required.Concrete shall attain a minimum compressive strength of 2,000 psi prior to steel pole installation.
28. Concrete: Classed 560–C–3250 designed for Fc = 2500 psi., continuous inspection is not required.
29. Slump shall not exceed 5 inches.
30. Use type II/V–Portland Cement or as recommended by the Geotechnical Engineer.
31. Concrete that will be exposed to sulfate–containing solutions or soils shall comply with the maximum water–cementitious ratios and minimum compressive strengths specified in ACI 318, Section 4.3.
32. Portland Cement ASTM C–150–07.
33. Aggregate ASTM C–33, use 1" maximum aggregate size. ⅜" max agg. size acceptable where pump mixes are used at unreinforced concrete backfill.
34. Place concrete immediately after completion of excavation and inspection by the Geotechnical Engineer and the L.A. City approved Inspector. No excavations shall be left unprotected or open overnight.
35. Concrete shall be placed in one continuous operation (no construction joint) with special equipment to prevent concrete from striking the sides of the excavation. Maximum freefall shall not exceed 5 ft.

© 1990, 2007, 2011 Musco Sports Lighting, LLC.
Patents issued and pending.

CONCRETE BACKFILL

36. Vibrate concrete full length.
37. All concrete reinforcing steel shall conform to ASTM A615, Grade 60

STEEL POLE

38. Steel pole sections conform to the 2017 LABC Chapter 22, and AISC 360–10.
39. All steel conforms ASTM specifications, as referenced on these drawings.
40. Minimum elongation in 2 inch gauge length = 18%, and the minimum elongation in 8 inch gauge length = 20%.
41. The fabricator shall provide mill tests or test data by a Los Angeles city approved testing agency showing conformance of the foregoing:
42. LONGITUDINAL WELDS:
    All longitudinal seam welding shall be done prior to cold welding.
    Weld type: Automatic high frequency resistance, automatic submerged arc or hybrid laser beam/gas metal arc welding procedure.
    Joint: Butt
    Penetration: 60% except 100% at female end of slip joint, detail H/MD1.
    Test: 60% pen. – Visual per AWS D1.1 article 8.15
    100% pen. – Visual per AWS D1.1 article 8.15
    Certified data on seam welding from shaft manufacturer shall include:
    1. Inspection frequency and procedures; I.E.; Visual, US, Radiographic, etc.
    2. Seam welding procedures; I.E.; percent penetration and method ERW, SAW, etc.
    3. Method and length of 100 percent penetration weld at female end of slip joint.

    Welding operator: AWS certified welding operator (CWO) and shall be done by City of L.A. B&S licensed fabricator.
    Welding inspector: AWS certified welding inspector (CWI) and approved by City of L.A. B&S deputy inspector in welding.
43. CIRCUMFERENTIAL WELDS
    Circumferential welds are not allowed. Shafts shall be fabricated from continuous rolled plates or coil.
44. All weldment conforms with AWS D1.1 specification for G.M.A.W. fillet utilizing E70S–X filler metal or S.A.W. fillet utilizing F7XX–EXX or F8XX–EXX filler metal. G.M.A.W. procedure conforms to AWS 5.18. S.A.W. procedure conforms to AWS 5.23
45. MANUFACTURERS SHAFT MARKINGS:
    The manufacturer shall inscribe a common I.D. number on each shaft comprising a particular factory pole assembly. (See also manufacturers gauge marks below).
    FIELD ASSEMBLY AND MANUFACTURERS GAUGE MARKS
    The pole manufacturer shall provide and the contractor shall follow the recommended pole assembly instruction general, the pole shall be assembled on the ground and the entire structure lifted into position on the previously installed foundation. Shafts shall be connected by slip splices only, welded splices shall not be used. The manufacturer shall shop assemble the entire pole and inscribe gauge marks across each slip joint to guide the field assembly. The contractor shall assemble the pole in the presence of the Special Inspector who shall verify that each slip splice attains a minimum overlap of 1.5 x larger shaft diameter.
46. GALVANIZING:
    Pole assembly, all hardware and accessories (except for non–ferrous items) shall be hot dip galvanized per ASTM A123. All fabrication shall be done before galvanizing. Minimum weight of galvanizing shall be 2.00 oz/sq. ft. Shafts shall be galvanized by single dipping only. Double dipping is not allowed.
47. SUBMITTAL:
    Manufacturing shall furnish the department with a galvanizing weight report showing conformance foregoing by the the thickness gauge. Method of measurement per ASTM E376.
48. All miscellaneous structural steel items conform to the Steel Construction Manual, 14th Edition, American Institute of Steel Construction.

PRECAST BASE

49. Precast pole base conforms to 2017 LABC, Chapter 19 and to Building Code Requirements for Reinforced Concrete, ACI 318–14.

TESTING AND INSPECTION

50. Testing and inspections in accordance with 2017 LABC.
51. Prior to pouring of concrete, the Geotechnical Engineer shall inspect and approve the footing excavations.
52. All compacted fill shall be placed under the supervision and approval of the Geotechnical Engineer.

STATEMENT OF SPECIAL INSPECTIONS*

ITEM	CONTINUOUS /PERIODIC	SCOPE
1. PIER FOUNDATIONS	CONTINUOUS	INSPECT INSTALLATION OF DRILLED PIER FOUNDATIONS. VERIFY DIAMETER, EMBEDMENT DEPTHS AS SCHEDULED, DEPTHS OF FILL, AND BEARING STRATA
2. CONCRETE MIX DESIGN	PERIODIC	REVIEW CONCRETE BATCH TICKETS AND VERIFY COMPLIANCE WITH APPROVED MIX DESIGN.
3. CONCRETE PLACEMENT	CONTINUOUS	INSPECT PLACEMENT OF CONCRETE FOR PROPER APPLICATION TECHNIQUES. VERIFY THAT CONCRETE CONVEYANCE AND DEPOSITING AVOIDS SEGREGATION OR CONTAMINATION. VERIFY THAT CONCRETE IS PROPERLY CONSOLIDATED.
4. SAMPLING AND TESTING OF CONCRETE	CONTINUOUS	AT THE TIME FRESH CONCRETE IS SAMPLED TO FABRICATE SPECIMENS FOR STRENGTH TESTS, PERFORM SLUMP AND AIR CONTENT TESTS, AND DETERMINE TEMPERATURE OF CONCRETE.
5. CRETEX PRECAST/ PRESTRESSED CONCRETE BASES	(PCI CERTIFIED)	FABRICATOR EXEMPT.** REFERENCE ICC ESR–3765
6. STRUCTURAL STEEL	(L.A. CITY APPROVED)	FABRICATOR EXEMPT.** REVIEW CERTIFIED MILL TESTS REPORTS AND IDENTIFICATION MARKINGS.

* The Special Inspector shall be a qualified person who shall demonstrate competence, to the satisfaction of the Building Official, for inspection of the particular type of construction or operation requiring special inspection.
**Special inspections shall not be required when the work is done on the premises of a fabricator registered and approved by the City to perform such work without special inspection.

SUBMITTALS

53. Prior to any pole fabrication, the contractor shall submit and obtain the department's approval of:
    1. All pole shaft certifications.
    2. All remaining certifications prior to shipping any poles to job site.

    The contractor shall furnish written certifications showing compliance with ASTM and the foregoing specification.

    CROSSARMS: ASTM A500, GR.B Min F_Y = 70 KSI
    CAP: ASTM A48 class 30, zinc die cast (alloy no. 3).

    FIXTURE MOUNTING SECTIONS: ASTM A513, F_Y = 38 KSI

    POLE SHAFTS: The manufacturer shall furnish certified mill reports and mechanical test results showing compliance with ASTM A595A or ASTM A572, Gr 55 or Gr 65. Each pole shaft and its mechanical and chemical data shall be traceable to its steel mill plate hea
    PRESTRESS STRANDS: ASTM A416, GR 270 (Low relaxation).

BUREAU OF ENGINEERING
OFFICIAL RECORD

BID SET
PROJECT ISSUE DATE : 06/22/21

CONSULTANT
KNA STRUCTURAL ENGINEERS
9931 Muirlands Boulevard, Irvine, CA 92618
Tel (949) 462-3200 • Fax (949) 462-3201
www.KNAstructural.com
KNA JOB NO.: 363.438

REGISTERED PROFESSIONAL ENGINEER — No. 4506 Exp. 6–30–19 — STRUCTURAL — STATE OF CALIFORNIA

INDEX OF SHEETS

ET-1(M) GENERAL NOTES
ET-2(M) FOUNDATION DETAILS
ET-7(M) 60B-3 POLE / FOUNDATION STANDARD
ET-12-1(M), ET-12-2(M) / POLE DETAILS
ET-13-1(M), / AUX. MOUNTING DETAILS

APPROVAL STAMPING AREA

CITY OF LOS ANGELES, DEPARTMENT OF RECREATION AND PARKS, 221 N. FIGUEROA ST. 1ST FLOOR, LOS ANGELES, CA 90012

We Make LA a Better Place

	DELTA	REVISIONS	BY	DATE
DESIGN/DATE				
DRAWN/DATE				
CHECK/DATE				

GENERAL MANAGER
DIRECTOR OF PLANNING & DEVELOPMENT
CONTRACT ADMINISTRATOR

SHEET TITLE: GENERAL NOTES AND FOUNDATION DETAILS
PROJECT: GRANADA HILLS POOL
FACILITY ADDRESS: 16730 CHATSWORTH ST.

PROJECT NO. 196783
FILE NO.
SHEET NO. ET-1(M)

RP-300118

P:\Jobs\2018\Granada Hills\Pool & Bath House Replacement\Granada Hills_CAD\LAT1(M)_LDwg 4/8/2019 11:17:04 AM

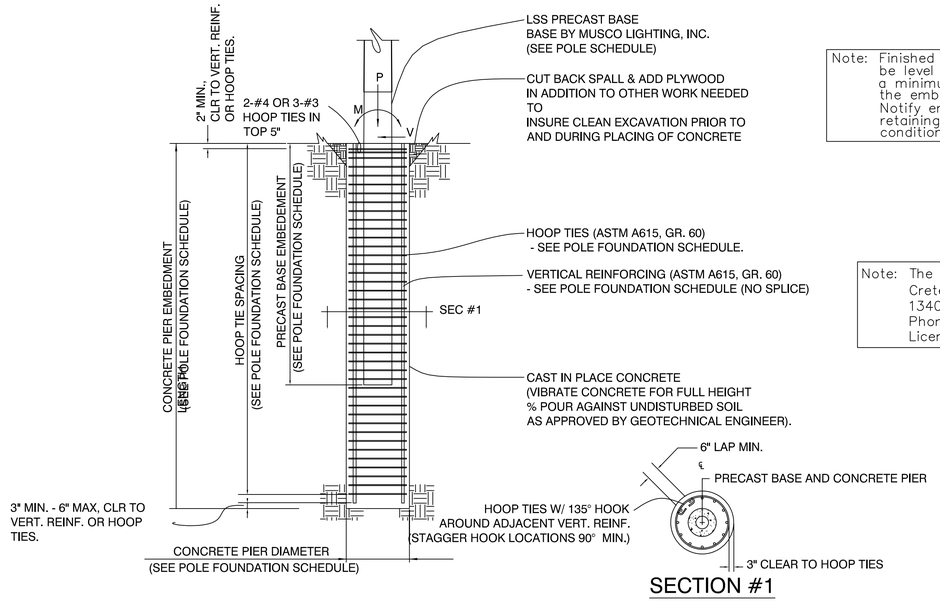

SECTION #1

A REINFORCED FOUNDATION DETAIL
N.T.S.

Note: Finished grade is assumed to be level adjacent to light poles for a minimum distance of one-half the embedment depth. Notify engineer of any sloping conditions, retaining walls, or other non-conforming conditions.

Note: The precast bases are fabricated by
Cretex Concrete Products
1340 6th Street, Elk River, MN 55330
Phone: 763-545-7473, Fax: 763-545-8399
License No. 1754

POLE FOUNDATION SCHEDULE

POLE TYPE-# OF FIXTURES (MAX) (LSS=LIGHT STRUCTURE)	ASD LEVEL FORCES (MAX)			C.I.P. DEEP FOUNDATION				PRECAST BASE
	MOMENT (M) FT-LBS	SHEAR (V) LBS	VERTICAL (P) LBS*	DIAMETER INCHES	EMBEDMENT FEET	VERTICAL REINFORCING (ASTM A615, GR 60)	HOOP TIE SIZE & SPACING (ASTM A615, GR 60)	EMBEDMENT FEET
LSS60B-3	34,980	1,098	1,418	36"	16'-0"	8-#8	#4 @ 6" O.C. TOP 9'-0" & #4 @ 12" O.C. BELOW	12'-0"

*VERTICAL FORCE DOES NOT INCLUDE WEIGHT OF PRECAST BASE. VERTICAL (P) LOAD IS THE DRESSED POLE WEIGHT FOR ERECTION PURPOSES.

BUREAU OF ENGINEERING
OFFICIAL RECORD

BID SET
PROJECT ISSUE DATE: 06/22/21

CONSULTANT
KNA STRUCTURAL ENGINEERS
9931 Muirlands Boulevard, Irvine, CA 92618
Tel (949) 462-3200 • Fax (949) 462-3201
www.KNAstructural.com
KNA JOB NO.: 363.438

REGISTERED PROFESSIONAL ENGINEER
JOSH RANDALL
No. 4506
Exp. 6-30-19
STRUCTURAL
STATE OF CALIFORNIA

APPROVAL STAMPING AREA

This has been reviewed by the Bureau of Engineering, Geotechnical Engineering Division and found to be in conformance with our recommendations in the reports dated August 22, 2017, October, 25 2018 and February 18, 2020

RCE/GE DATE

© 1990, 2007, 2011 Musco Sports Lighting, LLC.
Patents issued and pending.

CITY OF LOS ANGELES, DEPARTMENT OF RECREATION AND PARKS, 221 N. FIGUEROA ST. 1ST FLOOR, LOS ANGELES, CA 90012 RP-300118

We Make LA a better place

DELTA	REVISIONS	BY	DATE

DESIGN/DATE
DRAWN/DATE
CHECK/DATE

GENERAL MANAGER
DIRECTOR OF PLANNING & DEVELOPMENT
CONTRACT ADMINISTRATOR

SHEET TITLE GENERAL NOTES AND FOUNDATION DETAILS
PROJECT GRANADA HILLS POOL
FACILITY ADDRESS 16730 CHATSWORTH ST.

PROJECT NO. 196783
FILE NO.
SHEET NO. ET-2(M)

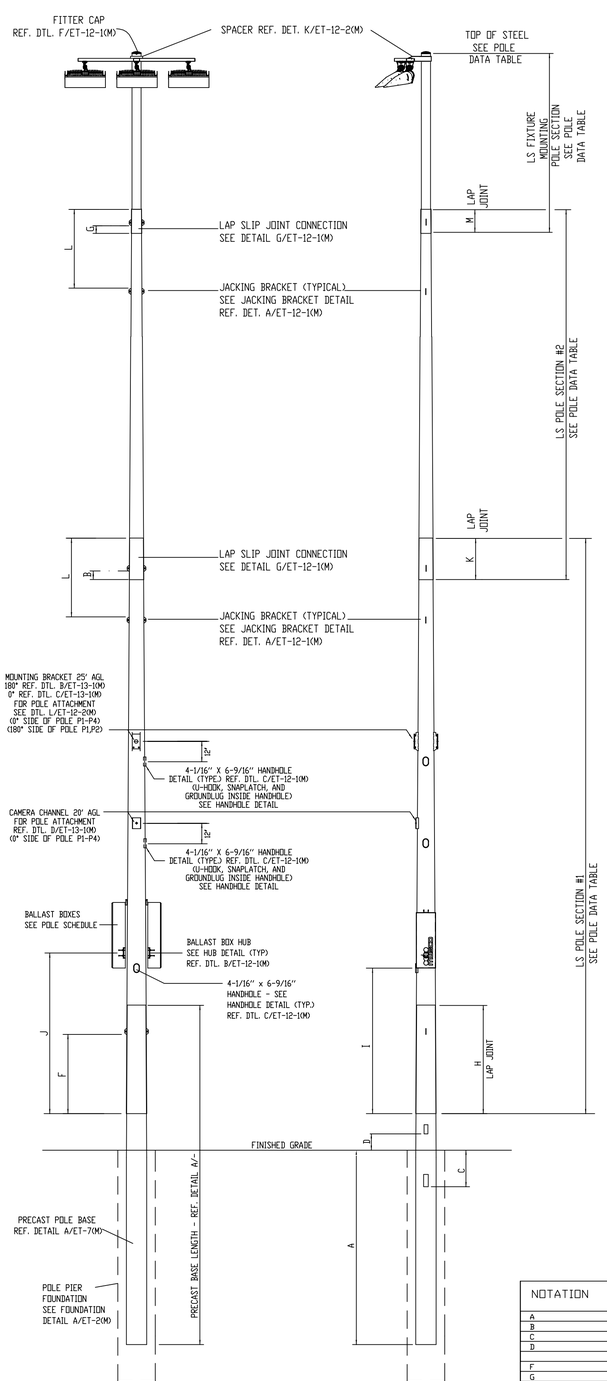

LSS60B POLE FRONT VIEW
N.T.S.

LSS60B POLE SIDE VIEW
N.T.S.

NOTATION	DIMENSION LSS60B
A	12'-0"
B	1'-6"
C	2'-0" NOM.
D	1'-0" NOM.
F	4'-4" NOM.
G	6"
H	5'-11 3/8" NOM. 4'-8" MIN.
I	7'-7 1/2" NOM.
J	8'-9 1/2" NOM.
K	2'-3" NOM. 1'-2 7/8" MIN.
L	4'-7" NOM.
M	1'-6 1/8" NOM. 9 1/2" MIN.

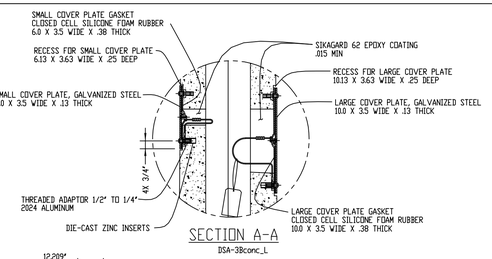

SECTION A-A
DSA-3Bconc_L

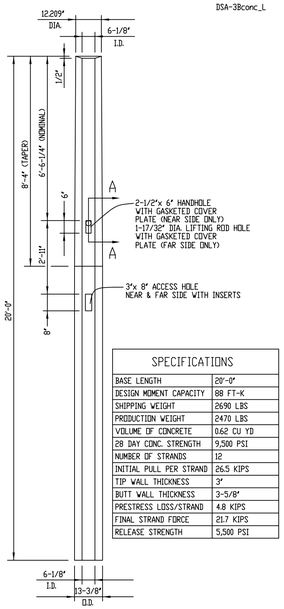

SPECIFICATIONS	
BASE LENGTH	20'-0"
DESIGN MOMENT CAPACITY	88 FT-K
SHIPPING WEIGHT	2690 LBS
PRODUCTION WEIGHT	2470 LBS
VOLUME OF CONCRETE	0.62 CU YD
28 DAY CONC. STRENGTH	9,500 PSI
NUMBER OF STRANDS	12
INITIAL PULL PER STRAND	26.5 KIPS
TIP WALL THICKNESS	3"
BUTT WALL THICKNESS	3-5/8"
PRESTRESS LOSS/STRAND	4.8 KIPS
FINAL STRAND FORCE	21.7 KIPS
RELEASE STRENGTH	5,500 PSI

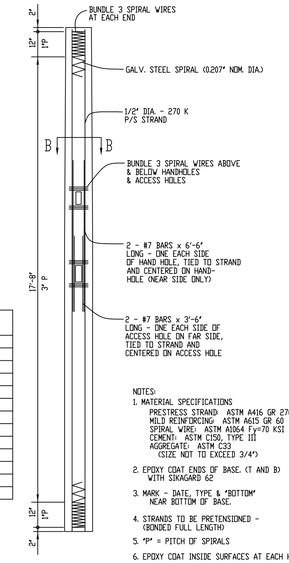

NOTES:
1. MATERIAL SPECIFICATIONS
   PRESTRESS STRAND ASTM A416 GR 270 (LOW RELAXATION)
   MILD REINFORCING ASTM A615 GR 60
   SPIRAL WIRE: ASTM A1064 Fy=70 KSI
   CEMENT: ASTM C150, TYPE III
   AGGREGATE: ASTM C33
   <SIZE NOT TO EXCEED 3/4">
2. EPOXY COAT ENDS OF BASE. (T AND B)
   WITH SIKAGARD 62
3. MARK - DATE, TYPE & "BOTTOM"
   NEAR BOTTOM OF BASE.
4. STRANDS TO BE PRETENSIONED -
   (BONDED FULL LENGTH)
5. "P" = PITCH OF SPIRALS
6. EPOXY COAT INSIDE SURFACES AT EACH HOLE
   WITH SIKAGARD 62 .015 MIN.
7. GROUNDING SYSTEM NOT SHOWN.
   -SEE ELECTRICAL DRAWINGS

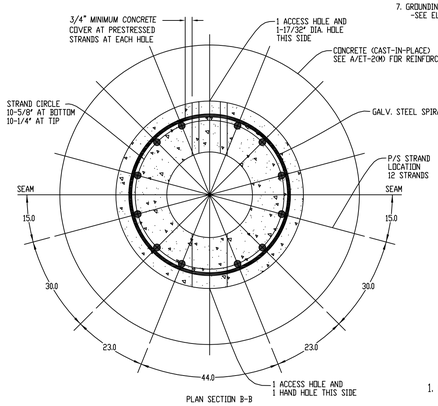

PLAN SECTION B-B

A TYPE 3B PRECAST BASE DETAIL
N.T.S. DSA-3Bconc_L

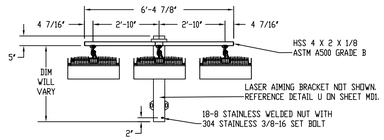

B 3 FIXTURE CONFIGURATION
N.T.S. DSA-3C-WEDGE2_A

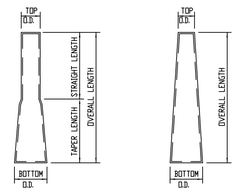

FIXTURE MOUNTING POLE SECTION

TOP/MIDDLE/BOTTOM POLE SECTION

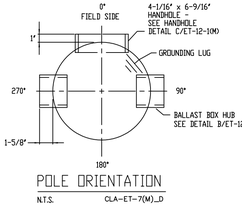

POLE ORIENTATION
N.T.S. CLA-ET-7(M)_D

1. CONTAINS COMBINED EPA OF LIGHT FIXTURES, CROSS ARM AND MISCELLANEOUS FIXTURE MOUNTING APPARATUS.

FIXTURE WEIGHT 510 LBS. THIS INCLUDES THE WEIGHT OF FIXTURE, CROSS ARM & MISC. MOUNTING APPARATUS. ELECTRICAL BALLAST BOX WEIGHT 10 LBS PER FIXTURE SERVICED

POLE SCHEDULE						
SITE LOCATION	POLE MARK	REFERENCE LOCATION	POLE TYPE	FIXTURE CONFIGURATION	TOTAL EPA[1]	BALLAST BOX REQUIREMENTS
	P1,P2,P3,P4	SEE POLE ORIENTATION PLAN	LSS60B	3 - SEE DETAIL B/ET-7(M)	6.92 SQ FT	SEE DETAIL O.D./ET-12-20(M)
SEE SITE PLAN (BY OTHERS)						

POLE DATA TABLE											
POLE TYPE	PIECE MARK	MAX NUMBER OF X-Arms	POLE SECTION	TOP O.D. (INCHES)	BTM. O.D. (INCHES)	OVERALL LENGTH	STRAIGHT LENGTH	TAPER LENGTH	THICKNESS (INCHES)	TOP OF STEEL	ASTM REFERENCE
LSS60B	LS-2009	1	FIXTURE MOUNTING	6.000"	6.505"	5'-3"	3'-5"	1'-10"	.120	59'-11 3/4" NOM. 61'-6 3/4" EXP.	A513 (Fy=38ksi)
	MP-1TT-2		#2	6.054"	9.440"	24'-2 1/4"	-----	24'-2 1/4"	.120	-----	A595A (Fy=55 ksi) or A572, Gr 55 or 65
	MP-3BT		#1	8.886"	13.400"	32'-2 7/8"	-----	32'-2 7/8"	.179	-----	A595A (Fy=55 ksi) or A572, Gr 55 or 65
	MP-3B		PRECAST BASE	FOR PRECAST MEMBER PROPERTIES SEE PRECAST BASE DETAIL A/-							

Standard-LSS60B_011811_132748

BID SET
PROJECT ISSUE DATE : 06/22/21

CONSULTANT
KNA STRUCTURAL ENGINEERS
9931 Muirlands Boulevard, Irvine, CA 92618
Tel (949) 462-3200 • Fax (949) 462-3201
www.KNAstructural.com
KNA JOB NO.: 363.438

REGISTERED PROFESSIONAL ENGINEER
No. 4506
Exp. 6-30-19
STRUCTURAL
STATE OF CALIFORNIA

APPROVAL STAMPING AREA

This has been reviewed by the Bureau of Engineering, Geotechnical Engineering Division and found to be in conformance with our recommendations in the reports dated August 22, 2017, October, 25 2018 and February 18, 2020

RCE/GE DATE

BUREAU OF ENGINEERING
OFFICIAL RECORD

RP-300118

We Make LA a better place

DELTA	REVISIONS	BY	DATE

CITY OF LOS ANGELES, DEPARTMENT OF RECREATION AND PARKS, 221 N. FIGUEROA ST. 1ST FLOOR, LOS ANGELES, CA 90012

GENERAL MANAGER
DIRECTOR OF PLANNING & DEVELOPMENT
DESIGN/DATE
DRAWN/DATE
CHECK/DATE
CONTRACT ADMINISTRATOR

SHEET TITLE 60B-8 POLE / FOUNDATION STANDARD
PROJECT GRANADA HILLS POOL
FACILITY ADDRESS 16730 CHATSWORTH ST.

PROJECT NO. 196783
FILE NO.
SHEET NO. ET-7(M)

CLA-ET-7(M)_D

P:\Jobs\2014\Granada Hills\Pool & Bath House Replacement\Grounds\Ms. CAD\LAET7M(L_D.mcp 4/8/2019 11:17:59 AM

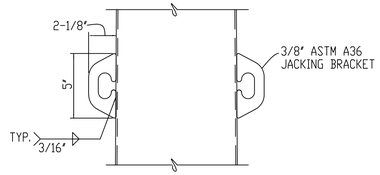

A JACKING BRACKET DETAIL
N.T.S. DSA-3RDSHEET_N

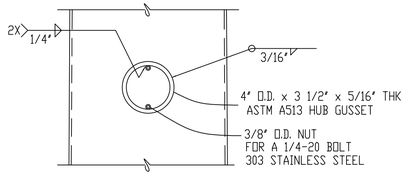

B HUB DETAIL
N.T.S. DSA-3RDSHEET_N

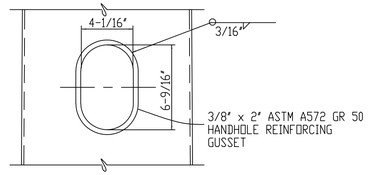

C HANDHOLE SLEEVE DETAIL
N.T.S. DSA-3RDSHEET_N

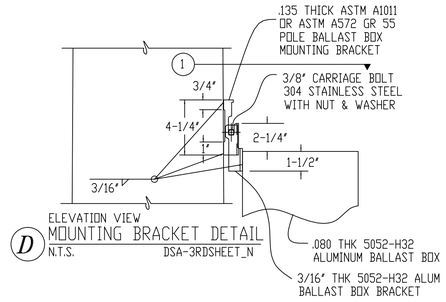

ELEVATION VIEW
D MOUNTING BRACKET DETAIL
N.T.S. DSA-3RDSHEET_N

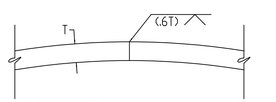

POLE LONGITUDINAL SEAM WELD
DETAIL TYPICAL CONDITION *
N.T.S. DSA-3RDSHEET_N

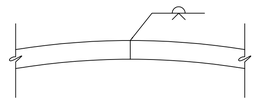

POLE LONGITUDINAL SEAM WELD DETAIL
AT LAP SPLICES (FEMALE END) *
N.T.S. DSA-3RDSHEET_N

* NOTE- 100% PENETRATION SEAM WELDS MAY BE PROVIDED FULL LENGTH OF POLE SHAFTS PROVIDED WPS'S ARE QUALIFIED BY TEST.

H LONGITUDINAL SEAM WELD DETAIL
N.T.S.

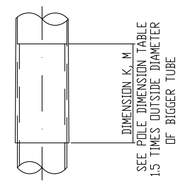

G SLIP JOINT CONNECTION DETAIL
N.T.S. DSA-3RDSHEET_H

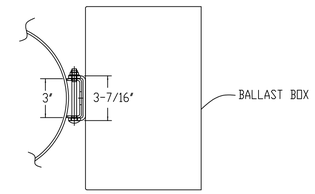

PLAN VIEW 1

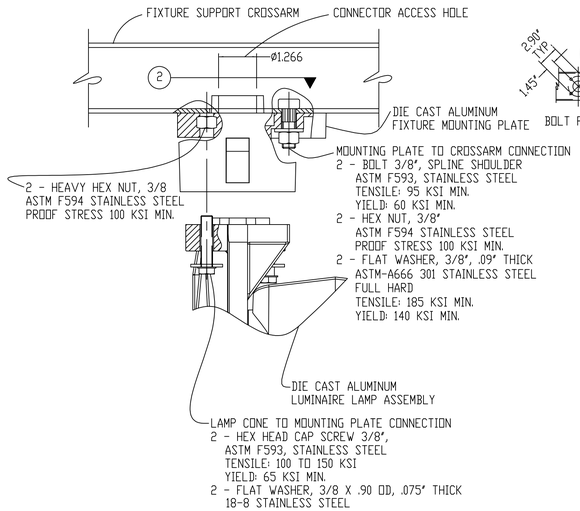

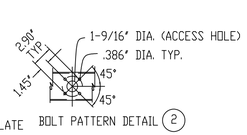

BOLT PATTERN DETAIL 2

E LUMINAIRE ATTACHMENT DETAIL
N.T.S. DSA-3RDSHEET_N

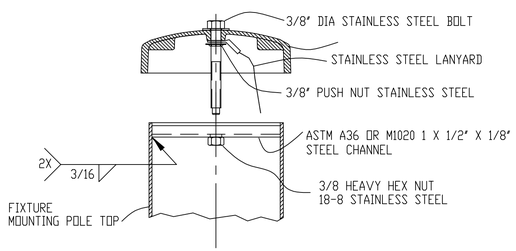

F FITTER CAP DETAIL
N.T.S. DSA-3RDSHEET_N

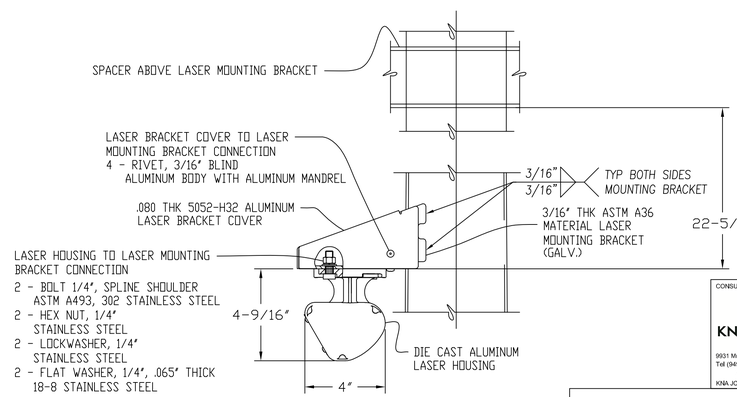

U LASER AIMING BRACKET
N.T.S. DSA-3RDSHEET_N

BUREAU OF ENGINEERING
OFFICIAL RECORD

BID SET
PROJECT ISSUE DATE : 06/22/21

CONSULTANT
KNA STRUCTURAL ENGINEERS
9931 Muirlands Boulevard, Irvine, CA 92618
Tel (949) 462-3200 - Fax (949) 462-3201
www.KNAstructural.com
KNA JOB NO.: 363.438

REGISTERED PROFESSIONAL ENGINEER
No. 4506
Exp. 6-30-19
STRUCTURAL
STATE OF CALIFORNIA

APPROVAL STAMPING AREA

RP-300118

We Make LA a better place

	DATE	BY	REVISIONS	DELTA

DESIGN/DATE
DRAWN/DATE
CHECK/DATE

CITY OF LOS ANGELES, DEPARTMENT OF RECREATION AND PARKS, 1200 WEST 7TH STREET #700, LOS ANGELES, CALIFORNIA 90017

GENERAL MANAGER
DIRECTOR OF PLANNING & DEVELOPMENT
CONTRACT ADMINISTRATOR

SHEET TITLE POLE DETAILS
PROJECT GRANADA HILLS POOL
FACILITY ADDRESS 16730 CHATSWORTH ST.

PROJECT NO. 196783
FILE NO.
SHEET NO. ET-12-1(M)

CLA-ET-12-1(M)_A

P:\Jobs\2874\Granada Hills\Pool & Bath House Replacement\Granada Hills CAD\CLA-ET-12-1(M)_A.dwg, 4/8/2019 11:18:03 AM

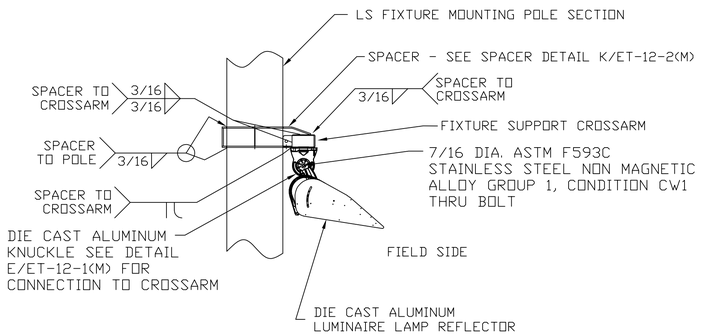

J LIGHT FIXTURE (TYPICAL)
N.T.S. DSA-SPACERWELDON_H

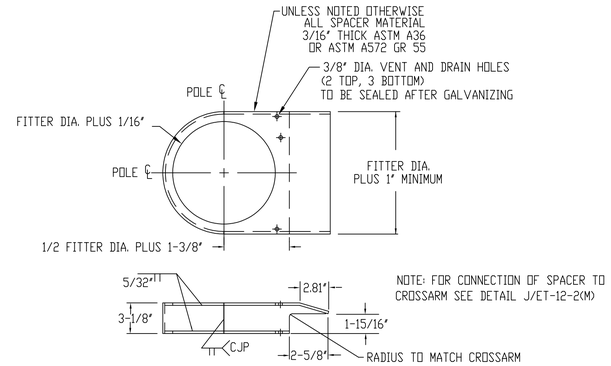

K SPACER DETAIL
N.T.S. DSA-SPACERWELDON_H

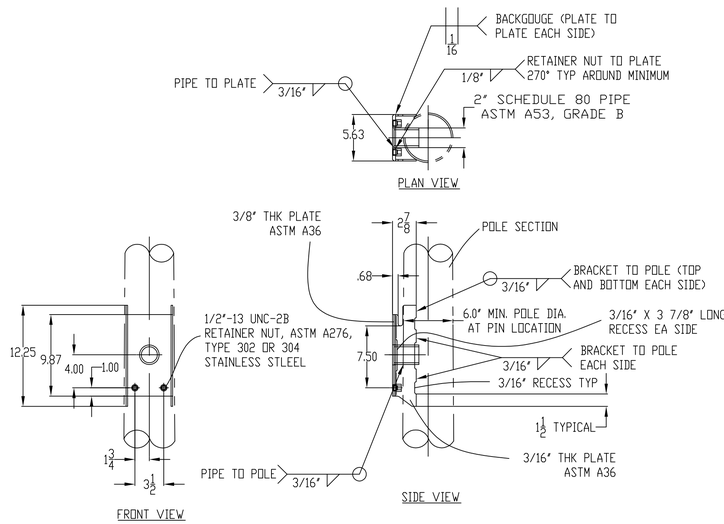

L BRACKET DETAIL
N.T.S. DSA-Brk-Dtl-L_A

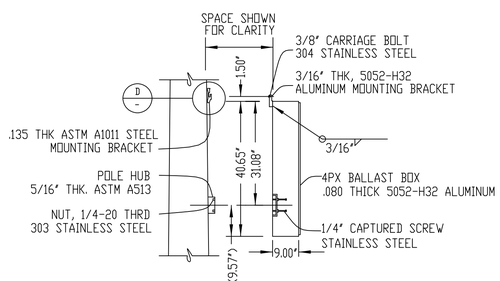

4PX
O BALLAST BOX CONNECTION DETAIL
N.T.S. DSA-4PX_C

BUREAU OF ENGINEERING
OFFICIAL RECORD

BID SET
PROJECT ISSUE DATE : 06/22/21

CONSULTANT
KNA STRUCTURAL ENGINEERS
9931 Muirlands Boulevard, Irvine, CA 92618
Tel (949) 462-3200 • Fax (949) 462-3201
www.KNAstructural.com
KNA JOB NO.: 363.438

REGISTERED PROFESSIONAL ENGINEER
No. 4506
Exp. 6-30-19
STRUCTURAL
STATE OF CALIFORNIA

APPROVAL STAMPING AREA

RP-300118

We Make LA a better place

DATE	BY	REVISIONS	DELTA

DESIGN/DATE
DRAWN/DATE
CHECK/DATE

GENERAL MANAGER
DIRECTOR OF PLANNING & DEVELOPMENT
CONTRACT ADMINISTRATOR

SHEET TITLE POLE DETAILS
PROJECT GRANADA HILLS POOL
FACILITY ADDRESS 16730 CHATSWORTH ST.

PROJECT NO. 196783
FILE NO.
SHEET NO. ET-12-2(M)

CITY OF LOS ANGELES, DEPARTMENT OF RECREATION AND PARKS, 1200 WEST 7TH STREET #700, LOS ANGELES, CALIFORNIA 90017

CLA-ET-12-2(M)_A

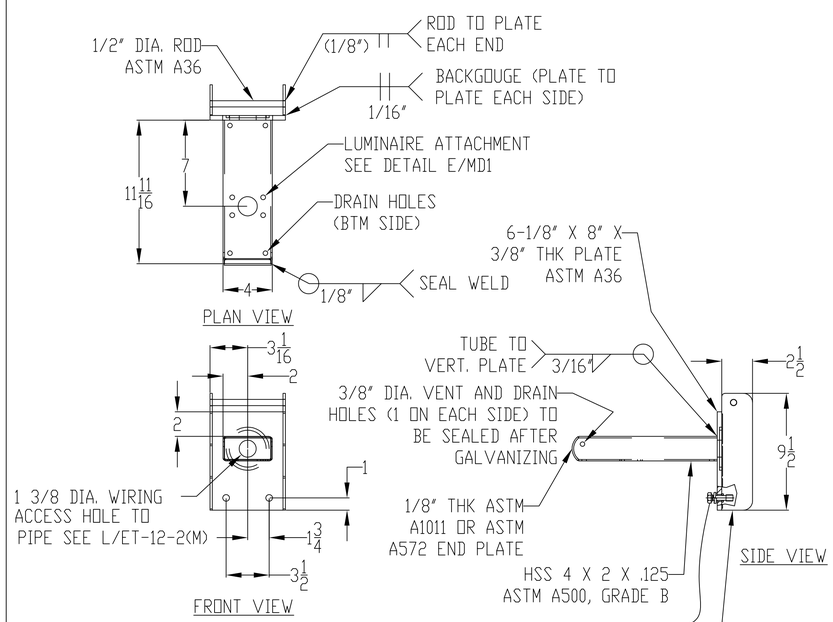

AUXILIARY BRACKET TO POLE CONNECTION
2 - BOLT 1/2", HEX HEAD CAPTIVE
ASTM F593, STAINLESS STEEL
TENSILE: 95 KSI MIN.
YIELD: 60 KSI MIN.
2 - LOCK WASHER 1/2"
18-8 STAINLESS STEEL
2 - O-RING #205, BUNA-N
DUROMETER: SHORE A 70
REF A/MD3 FOR MATING HARDWARE

B 1P AUXILIARY MOUNTING BRACKET
N.T.S.

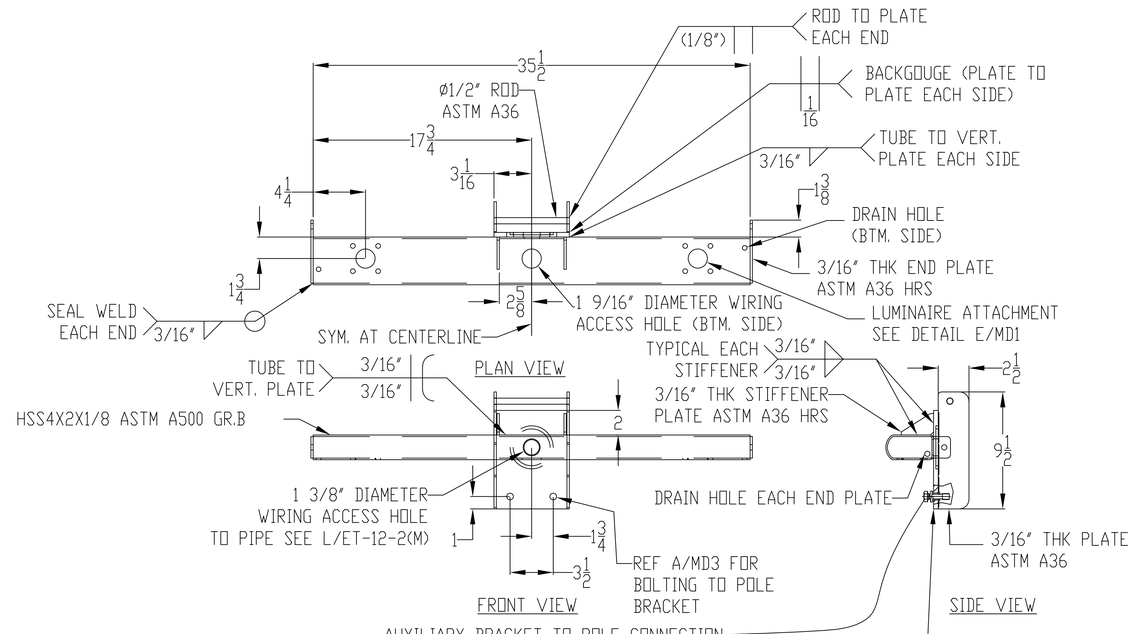

AUXILIARY BRACKET TO POLE CONNECTION
2 - BOLT 1/2", HEX HEAD CAPTIVE
ASTM F593, STAINLESS STEEL
TENSILE: 95 KSI MIN.
YIELD: 60 KSI MIN.
2 - LOCK WASHER 1/2"
18-8 STAINLESS STEEL
2 - O-RING #205, BUNA-N
DUROMETER: SHORE A 70
REF A/MD3 FOR MATING HARDWARE

C 2P AUXILIARY MOUNTING BRACKET
N.T.S.

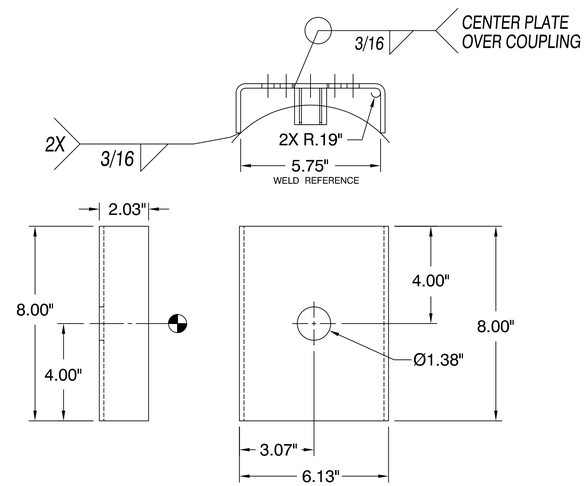

MATERIAL - PLATE, $\frac{3}{16}$" THK ASTM A36

D CAMERA MOUNTING CHANNEL
N.T.S.

BUREAU OF ENGINEERING
OFFICIAL RECORD

CONSULTANT
KNA STRUCTURAL ENGINEERS
9931 Muirlands Boulevard, Irvine, CA 92618
Tel (949) 462-3200 • Fax (949) 462-3201
www.KNAstructural.com
KNA JOB NO.: 363.438

REGISTERED PROFESSIONAL ENGINEER
No. 4506
Exp. 6-30-19
STRUCTURAL
STATE OF CALIFORNIA

BID SET
PROJECT ISSUE DATE: 06/22/21

APPROVAL STAMPING AREA

RP-300118

We Make LA a better place

DELTA	REVISIONS	BY	DATE

DESIGN/DATE
DRAWN/DATE
CHECK/DATE

GENERAL MANAGER
DIRECTOR OF PLANNING & DEVELOPMENT
CONTRACT ADMINISTRATOR

CITY OF LOS ANGELES, DEPARTMENT OF RECREATION AND PARKS, 221 N. FIGUEROA ST. 1ST FLOOR, LOS ANGELES, CA 90012

SHEET TITLE: OPTIONAL AUXILIARY MOUNTS
PROJECT: GRANADA HILLS POOL
FACILITY ADDRESS: 16730 CHATSWORTH ST.

PROJECT NO. 196783
FILE NO.
SHEET NO. ET-13-1(M)

CLA-ET-13-1(M)_C

PROJECT MANUAL

FOR CONSTRUCTION OF

DEPARTMENT OF RECREATION AND PARKS
GRANADA HILLS PARK
POOL AND BATHHOUSE REPLACEMENT

BID SET

PREPARED FOR:

CITY OF LOS ANGELES
DEPARTMENT OF RECREATION AND PARKS
221 NORTH FIGUEROA STREET SUITE 1510
LOS ANGELES, CA 90012

WORK ORDER NO: E170517F

PREPARED BY:

Sparano + Mooney Architecture

BUREAU OF ENGINEERING - ARCHITECTURAL DIVISION
DEPARTMENT OF PUBLIC WORK
CITY OF LOS ANGELES

June 22, 2021

THIS PAGE INTENTIONALLY LEFT BLANK

TABLE OF CONTENTS

GENERAL CONDITIONS (GC) ……I

GENERAL REQUIREMENTS (GR) ……II

SUPPLEMENTARY GENERAL REQUIREMENTS ……..III

TECHNICAL SPECIFICATION ……IV

APPENDIX

- Geotechnical Report dated 8-22-17
- Supplemental Geotechnical Report dated 10-25-18
- Supplemental Geotechnical Report dated 2-18-20
- Asbestos and Lead-Base Paint Survey Report dated 2-8-19
- RAP Tree Protection Guidelines
- Wood Framing Inspection – Report SER171212

THIS PAGE INTENTIONALLY LEFT BLANK

I. GENERAL CONDITIONS

GRANADA HILLS PARK
POOL AND BATHHOUSE REPLACEMENT
PROJECT

PREPARED BY:

BUREAU OF ENGINEERING - ARCHITECTURAL DIVISION
DEPARTMENT OF PUBLIC WORK
CITY OF LOS ANGELES

ENGINEERING
CITY OF LOS ANGELES

THIS PAGE INTENTIONALLY LEFT BLANK

CONTENTS
GENERAL CONDITIONS

Article **Page**

	GENERAL	1
1.	DEFINITIONS	1
	CONTRACT DOCUMENTS	8
2.	SCOPE	8
3.	AUTHORITY OF THE BOARD OF RECREATION AND PARK COMMISSIONERS, PROJECT MANAGER, AND INSPECTOR	8
4.	INTENT OF CONTRACT DOCUMENTS	8
5.	STANDARD SPECIFICATIONS	9
6.	INTERPRETATION OF PLANS AND SPECIFICATIONS	9
7.	PRECEDENCE OF CONTRACT DOCUMENTS	9
8.	ACCURACY OF PLANS AND SPECIFICATIONS	10
9.	EXAMINATION OF COVERED WORK	10
10.	UNNOTICED DEFECTS	10
11.	BUILDING CODES AND REGULATIONS	10
12.	LENGTH OF WORKDAY AND WORK WEEK	10
13.	PAYMENT OF EMPLOYEES	11
14.	CONVICT-MADE MATERIALS	11
15.	SALES; BUSINESS OR USE TAX	11
16.	NONDISCRIMINATION IN EMPLOYMENT	11
17.	APPRENTICE UTILIZATION	11
18.	LAWS AND REGULATIONS	12
19.	PERMITS AND CONSTRUCTION EASEMENTS	12
20.	PARTIES EXCLUDED FROM THE WORK	12
21.	BUSINESS TAX REGISTRATION CERTIFICATES	13
22.	FINANCIAL LIABILITY	13
	THE CONTRACTOR'S RESPONSIBILITIES	13
23.	CONTRACTOR'S OBLIGATIONS	13
24.	CONTRACTOR'S REPRESENTATIVE AT THE SITE	14
25.	FAMILIARITY WITH PLANS AND SPECIFICATIONS	14
26.	JOB CONDITIONS	15
27.	RESPONSIBILITY FOR SITE	15
28.	WORKMANSHIP AND MATERIALS	15
29.	INJURY AND ILLNESS PREVENTION - SAFETY MEASURES	16
30.	PROTECTION OF PERSONS AND PROPERTY AND RESTORATION OF EXISTING IMPROVEMENTS	16
31.	NON-CONFORMING WORK	18
32.	SUBCONTRACTORS AND SUB-SUBCONTRACTORS… **NOTE: REVISED AS OF FEBRUARY 12, 2016**	19

CONTENTS
GENERAL CONDITIONS

Article **Page**

33. RESPONSIBILITY OF CONTRACTOR TO ACT IN EMERGENCY 23
34. ASSIGNMENT 23
35. INDEPENDENT CONTRACTOR 23
INDEMNIFICATION AND INSURANCE REQUIREMENTS 23
36. INDEMNIFICATION 23
37. INSURANCE 24
38. SERVICE OF NOTICE 28
39. AGENT TO ACCEPT SERVICE 28
PROGRESS OF WORK 28
40. TEMPORARY SUSPENSION OF WORK 28
41. UNAVOIDABLE DELAY 29
42. ARCHAEOLOGICAL AND PALEONTOLOGICAL DISCOVERIES 30
43. OTHER CONTRACTS 30
44. TERMINATION OF CONTRACT BY CITY (CONTRACTOR NOT AT FAULT) 30
45. TERMINATION OF CONTRACT BY CITY (CONTRACTOR DEFAULT) 32
46. PRE-FINAL INSPECTION 33
47. FINAL INSPECTION 33
48. PARTIAL ACCEPTANCE 33
49. FINAL ACCEPTANCE 34
50. LIQUIDATED DAMAGES 34
51. COMPENSATION FOR DELAY, DISRUPTION, AND UNANTICIPATED OVERHEAD 35
CHANGES TO THE CONTRACT 36
52. CHANGES AND EXTRA WORK 36
53. DIFFERING SITE CONDITIONS 37
LEGAL REQUIREMENTS 38
54. CLAIMS AND PROTESTS 38
55. COMMENCEMENT OF STATUTE OF LIMITATIONS 40
56. GOVERNING LAW 40
57. VENUE 40
58. NO WAIVER OF RIGHTS 40
59. ACCEPTANCE OF FINAL PAYMENT CONSTITUTES RELEASE 40
60. PATENTS AND COPYRIGHTS 41
61. PUBLIC RECORDS ACT 41

GENERAL

1. DEFINITIONS

The following terms as used in the Contract shall be defined and interpreted as follows:

ADDENDA

Written documents issued during the bidding period which modify, supersede, or supplement the original Contract Documents.

AGREEMENT

See "CONTRACT."

AS SHOWN, AS INDICATED, AND AS SPECIFIED

These words are understood to be followed by the words "in the Contract Documents."

BENEFICIAL USE

Use of a building, system, structure, or facility by the CITY.

BID

The offer of the Bidder submitted on the prescribed forms setting forth the price(s) for the Work.

BIDDING PERIOD

The time period allocated to the Bidder to enable preparation of a Bid or Proposal.

BIDDER

The person or persons, partnership, firm or corporation submitting a Bid or proposal for the Work defined in the Contract Documents.

BID GUARANTY

The cash, certified check or Bidders Surety Bond accompanying the Bid as a guaranty that the Bidder will enter into a contract with the RECREATION AND PARK COMMISSION for the performance of the Work.

BOARD OF RECREATION AND PARK COMMISSIONERS

The Board of Recreation and Park Commissioners, of the City of Los Angeles.

BOND

Bid bond, performance and payment bond or other instrument of security.

CHANGE ORDER

A written order to the CONTRACTOR signed by the GENERAL MANAGER directing an addition, deletion or revision in the Work, or an adjustment in the Contract Price or time which is issued after the effective date of the Contract and effects less modification than is effected by a Supplemental Agreement. A Change Order may or may not also be signed by the CONTRACTOR.

CITY

The CITY of Los Angeles, a municipal corporation.

CLAIM

A written demand or assertion by one of the parties seeking, as a matter of right, an interpretation of the Contract Documents, payment of money, extension of time or other relief. The party asserting the claim must set forth the facts and circumstances for which the other party is responsible.

CODE

Codes of the State of California as well as any other Federal or local law, statute, ordinance, rule or regulation.

CONTRACT

A binding agreement between the CITY and the CONTRACTOR for the Work described in the Contract Documents.

CONTRACT COMPLETION DATE

The date the CITY accepts the entire Work as being in compliance with the Contract Documents, and authorizes the final payment in accordance with the requirements set forth in Article 25, FINAL PAYMENT of the General Requirements.

CONTRACT DOCUMENTS

The following documents constitute a part of and comprise the Contract Documents: Agreement, Notice Inviting Bids or Proposals, Instruction to Bidders, Contractor's Bid or Proposal, Special and Supplementary Conditions, General Requirements, Geotechnical Baseline Report (if provided for the in the General Requirements), Federal and State Requirements, Standard and Reference Specifications, Standard Plans, Plans and Specifications, Soil Reports and Subsurface Investigation Reports, Summary of First Notice Replies, Addenda and Notice to Bidders issued prior to the opening of bids, Plan Clarifications, Request for Information, Supplemental Agreements and Change Orders issued after Contract award.

CONTRACTOR DEFAULT

See TERMINATION OF CONTRACT BY CITY (CONTRACTOR DEFAULT) Article of these General Conditions.

CONTRACT PRICE

The total amount of money for which the Contract is awarded.

CONTRACT UNIT PRICE

The amount stated in the Bid for a single unit of an item of Work.

CONTRACTOR

The person or persons, partnership, firm or corporation who enters into the Contract as stipulated in the Agreement awarded by the CITY. Prime Contractor and Contractor shall mean the same.

CONTRACTOR'S REPRESENTATIVE

The representative of the CONTRACTOR at the site who shall supervise and direct the construction and who is authorized to receive and fulfill instructions from the PROJECT MANAGER or INSPECTOR.

DAYS

Unless otherwise specifically stated, the term "days" will be understood to mean consecutive calendar days.

EASEMENT

Permission to access or utilize property not owned by the CITY.

EQUAL

See "OR EQUAL".

GENERAL CONDITIONS

Instructions to the CONTRACTOR setting forth its responsibilities and the CITY'S responsibilities for proper execution of the Work indicated herein.

GENERAL MANAGER

GENERAL MANAGER of the Department of Recreation and Parks, or an authorized representative.

GENERAL REQUIREMENTS

Instructions to the CONTRACTOR setting forth its responsibilities and the CITY'S responsibilities for proper execution of the administration and technical aspects of the project indicated herein.

GEOTECHNICAL DESIGN SUMMARY REPORT /GEOTECHNICAL BASELINE REPORT (GBR)

The report that sets forth the geotechnical interpretations regarding anticipated conditions for the design and construction of the project. This report establishes a geotechnical baseline that provides the basis for identification of changed site/ground conditions.

GEOTECHNICAL SITE ASSESSMENT

SEE AGEOTECHNICAL DESIGN SUMMARY REPORT.@

HOLIDAY

Those holidays and dates observed by the CITY. A list of such holiday dates is available from the RECREATION AND PARK COMMISSION Office.

IMMEDIATELY NOTIFY

The obligation to cause verbal notification of some condition or event as soon as possible upon discovery or knowledge of the condition or event and in all instances, no more than two (2) hours.

INSPECTOR

The Inspector of Public Works, the Director of the Bureau of Contract Administration, or an authorized representative(s) located at the Public Works Building, 1149 S. Broadway, 3rd Floor, Los Angeles, CA, 90015.

JOBSITE

The area upon or in which the CONTRACTOR'S operations are carried on and such other areas adjacent thereto as may be designated as such by the Contract Documents.

LAW

Any Federal, State or local law, statute, ordinance, rule, regulation or code.

LIQUIDATED DAMAGES

The amount the CONTRACTOR shall pay to the CITY, as determined by rates and amounts as fixed and agreed in the Contract Documents, due to the CONTRACTOR'S failure to complete the Work or submit the schedule within the time specified, or for non-compliance with other specified requirements.

MODIFICATIONS

Includes Change Orders and Supplemental Agreements. A modification may only be issued after the effective date of the Contract.

NON-CONFORMING WORK

Non-conforming Work is Work which does not conform in all respects to all requirements in the Contract Documents, including damaged Work and damaged materials, without respect to the causes or nature of such lack of conformity.

NOTICE OF AWARD

The written notice by the CITY to the successful Bidder stating that upon compliance by the successful Bidder of required conditions, the City will execute the Contract.

NOTICE TO BIDDERS

A notice included in the bidding documents that informs prospective bidders of the bidding procedures and the opportunity to submit a bid.

NOTICE TO CONTRACTOR

The written notice by the CITY to the CONTRACTOR which officially advises on direction and provides information pertinent to the Contract.

NOTICE TO PROCEED

The written notice by the CITY to the successful Bidder stating that the Work or portions of the Work may commence.

NOTICE TO WITHHOLD

The written notice by the CITY to the CONTRACTOR advising that certain payments shall be withheld due to unacceptable execution of the Work by the CONTRACTOR.

OR EQUAL

The product, equipment, or material which is proposed by the CONTRACTOR for use in the Work which in the sole judgment of the PROJECT MANAGER is equal to, better than and as suitable as the product or material specified in the Contract Documents as to function, performance, reliability, quality, and general configuration.

PARTIAL ACCEPTANCE

Any portion of the Work which has been completed in accordance with the plans and specifications and has been accepted in writing by the PROJECT MANAGER and the INSPECTOR on the "Statement of Partial Completion" form.

PLANS OR DRAWINGS

The drawings, profiles, cross sections, working drawings, and supplemental drawings, or reproductions thereof, issued or approved by the PROJECT MANAGER, which show the location, character, dimensions or details of the Work.

PROJECT

The Work and/or construction operations executed through the performance of this Contract.

PROJECT MANAGER

The authorized representative of the GENERAL MANAGER.

PROTEST

See definition of Claim.

REFERENCE SPECIFICATIONS

Those bulletins, standards, rules, methods of analysis or test, codes, and specifications of other agencies, PROJECT MANAGER societies, or industrial associations referred to in the Contract Documents. These refer to the latest edition, including amendments in effect and published at the time of advertising the project, adopted by the RECREATION AND PARK COMMISSION, if applicable, unless specifically referred to by edition, volume, or date.

RIGHTS OF ENTRY

Written permission from an owner of a facility or property to access the facility or property for a specific purpose.

RIGHT OF WAY

Rights of way, easements, or rights of entry for the Work will be provided by the CITY. The CONTRACTOR shall make arrangements, pay for, and assume all responsibility for acquiring, using, and disposing of additional work areas and facilities temporarily required in addition to those provided by the CITY. The

CONTRACTOR shall indemnify and hold the CITY harmless from all claims for damages caused by such actions.

SPECIAL PROVISIONS

Any provision which supplements or modifies the Specifications.

SPECIFICATIONS

The Contract Documents and revisions to it which were prepared to specifically describe the commercial, legal, technical and nontechnical requirements of the project. Specifications include but are not limited to Terms, Provisions, General Conditions, General Requirements, Special Provisions, Technical Specifications, Equipment Schedules, and all revisions made to the specifications in Addenda, Notice To Bidders, and Change Orders or Modifications, signed by the GENERAL MANAGER.

STANDARD PLANS

Details of standard structures, devices or instructions referred to on the plans or in the specifications by title or number issued by the CITY.

STANDARD SPECIFICATIONS

Documents, Materials and items specified in Article 5 of these General Conditions.

STARTUP

That stage of performance testing as defined in the specifications which use the actual process fluid, material, or medium for a specified number of days of continuous operation without major interruptions and prior to acceptance by the CITY.

SUBCONTRACTOR

A "Subcontractor" is a contractor who is licensed pursuant to California Business and Professions Code, Section 7000 *et.seq.* and who contracts directly with the prime CONTRACTOR. The Subcontractor performs some part of the Work of the Contract. A Subcontractor does not have any direct contract with the CITY related to the project.

SUB-SUBCONTRACTOR

A "Sub-subcontractor" is a Subcontractor, within the definition of that term, who has a contract with a Subcontractor and has no Contract with the City related to the project.

SUPERVISOR

The designated individual who is responsible for the proper execution or installation of some portion or portions of the Work. The SUPERVISOR reports directly or indirectly to the CONTRACTOR'S REPRESENTATIVE.

SUPPLEMENTAL AGREEMENT

A written amendment of the Contract Documents which modifies the Contract in price or scope by a percentage which is more than can be accomplished by a Change Order and signed by the CITY and the CONTRACTOR.

SUPPLIER

An individual, organization, or firm who is not required for the purposes of the Work to be licensed pursuant to California Business and Professions Code as a CONTRACTOR, Subcontractor, or Sub-subcontractor, within the meanings of those terms as defined herein above, who provides equipment and/or materials for the Work, to the CONTRACTOR, a Subcontractor, or a Sub-subcontractor, including that fabricated to a special design, but who does not perform labor at the site except for labor or labor supervision required by some manufacturers as part of their equipment installation for warranty or other purposes. The term "supplier" also includes fabricator, manufacturer, or vendor.

SURETY

Any individual, firm or corporation, bound with and for the CONTRACTOR for the acceptable performance, execution and completion of the Work, and for the satisfaction of all obligations incurred.

TERMS

Unless otherwise stated, the words "directed, required, permitted, ordered, instructed, designated, considered necessary, prescribed, approved, acceptable, satisfactory," or words of like meaning, refer to actions, statements, judgments, conclusions, and decisions within the responsibility of the PROJECT MANAGER or the INSPECTOR.

UNAVOIDABLE DELAY

Delay arising from causes beyond the control and without the fault or negligence of the CONTRACTOR and its Subcontractors at all tiers.

UTILITY

Tracks, overhead or underground wires, cables, pipeline, conduits, ducts, or structures, sewers, or storm drains owned, operated, or maintained in or across a public right of way, private easement, or jobsite.

VOLUME I

Are the items in the bid package entitled “CITY OF LOS ANGELES, CALIFORNIA, DEPARTMENT OF RECREATION AND PARKS INSTRUCTION TO BIDDERS, PROPOSAL, AFFIDAVIT AND BOND FOR…” inclusive.

VOLUME II

Are the items in the bid package entitled “CONTENTS GENERAL CONDITIONS”, “CONTENTS GENERAL REQUIREMENTS”, and any specifications and attachments inclusive.

WORK

Includes all material, labor, utility services, tools, expendable equipment, and all appliances, machinery, transportation, appurtenances and specified services necessary to perform and complete the Contract; and such additional items not specifically indicated or described that can be reasonably inferred as belonging to the item described or indicated and as required by good practice to provide a complete and satisfactory system or structure. As used herein, "provide" shall be understood to mean "furnish and install, complete in place."

WORKSITE

See "JOBSITE."

WORKDAY

Any day within the period between the start of the Contract time and the date provided in the Contract for completion or the date established in the Statement of Completion by the CITY acknowledging that all Work under the contract is complete, whichever occurs last, other than:

- Saturday,
- Sunday,
- any day designated as a holiday by the CITY, and,
- any other day designated as a holiday in a Master Labor Agreement entered into by the CONTRACTOR or on behalf of the CONTRACTOR as an eligible member of a Contractor's Association,
- any day the CONTRACTOR is prevented from working for cause as established by UNAVOIDABLE DELAY of these General Conditions; and,

- any day the Contractor is prevented from working during the first five (5) hours of the workday with at least sixty percent (60%) of the normal Work force from cause as established by an Unavoidable Delays of these General Conditions.

CONTRACT DOCUMENTS

2. SCOPE

A. The work to be performed under this Contract shall consist of furnishing all tools, equipment, materials, supplies and manufactured articles, and for furnishing all transportation, services, including fuel, power and water, and essential communications, and the performance of all labor, Work, or operations required for the fulfillment of the Contract, in strict accordance with the specifications, schedules, and drawings, all of which are made a part hereof, and including such detail sketches as may be furnished by the PROJECT MANAGER from time to time during the construction in explanation of said drawings. The items shall be complete and all Work, material, and services not expressly called for in the Specifications, or not shown on the drawings, which may be necessary for complete and proper construction to carry out the Contract in good faith shall be performed, furnished, and installed by the CONTRACTOR at no increase in cost to the CITY.

B. The Work required by the Contract shall be completed within **Five Hundred Forty-Nine (548)** calendar days of the date specified by the General Manager in the notice to proceed with the work. The Contract completion time shall consist of **Four Hundred Ninety-Nine (499)** calendar days for construction, and **Forty-Nine (49)** calendar days for maintenance.

3. AUTHORITY OF THE RECREATION AND PARK COMMISSION, PROJECT MANAGER, AND INSPECTOR

The GENERAL MANAGER, RECREATION AND PARKS has the final authority in all matters affecting the Work The CONTRACTOR shall promptly comply with instructions from the PROJECT MANAGER or the INSPECTOR.

On all questions relating to quantities, the acceptability of material, equipment, or Work, the execution, progress or sequence of Work, and the meaning of specifications or drawings, the decision of the PROJECT MANAGER is final and binding, and shall be precedent to any payment under the Contract, unless otherwise ordered by the BOARD OF RECREATION AND PARKS.

The PROJECT MANAGER is authorized to require performance of the Work consistent with the meaning of the plans and specifications and to approve necessary additive changes in Plans up to a maximum as authorized by the Recreation and Park Commission. The PROJECT MANAGER may initiate changes in Plans or scope of Work, regardless of cost, for submission to the RECREATION AND PARK COMMISSION for its approval.

The INSPECTOR is authorized to enforce compliance with Plans and Specifications, to determine the acceptability of materials and workmanship, administer requirements with respect to subcontracts, and to prepare and process progress payment estimates. In the event of a dispute between the CONTRACTOR and the INSPECTOR, the latter is authorized to reject materials or suspend the Work until any questions at issue can be referred to and decided by the RECREATION AND PARK COMMISSION or, in design matters, by the PROJECT MANAGER.

The INSPECTOR may sample and test all materials to be incorporated into the Work. The INSPECTOR may delegate this authority to sample materials and perform tests to the Department of General Services, Standards Division, or other approved agencies, the CONTRACTOR will pay for testing.

4. INTENT OF CONTRACT DOCUMENTS

The Contract Documents are complementary, and what is called for by one part shall be as binding as if called for by all. The intent of the Documents is to include all Work consistent therewith and reasonably inferable there from as being necessary for completion of the Contract. Materials or Work described in words that indicate the proper execution and a well known technical or trade designation shall be held to refer to such recognized standards.

It is understood and agreed that the written terms and provisions of the Contract Documents represent the entire and integrated agreement between the parties hereto and supersede all prior negotiations, representations, or agreements, either written or oral. The Contract Documents shall not be construed to create any contractual relationship of any kind between the PROJECT MANAGER or the INSPECTOR and the CONTRACTOR.

5. STANDARD SPECIFICATIONS

The applicable portions of the Standard Specifications for Public Works Construction (SSPWC) shall become part of these Contract Documents, and unless otherwise specified, all Work and materials shall conform to the Standard Specifications as modified by the corresponding issue of Standard Plan No. S-610 as amended or revised and adopted by the RECREATION AND PARK COMMISSION in effect on the date of advertising for bids.

6. INTERPRETATION OF PLANS AND SPECIFICATIONS

Every part of the Contract, as shown on the Plans and described in the Specifications, must be completed and finished. No deviations are to be made from the Plans or Specifications without previous written authorization from the PROJECT MANAGER.

In general, the Plans will show dimensions, positions and type of construction, and the Specifications will define materials, quantities, and if indicated, required methods of construction. Any Work called for on the Plans and not mentioned in the Specifications, or vice versa, shall be performed as though fully set forth in both. Work not particularly detailed, marked, or specified shall be the same as similar parts that are detailed, marked, or specified.

The Plans have been drawn to the indicated scales except where otherwise noted. Dimensions indicated by figures or numerals shall govern in all cases whether drawn to scale or not. Larger scale drawings shall take precedence over smaller scale drawings. Drawings shall not be scaled for dimensions.

The general character of the detailed Work is shown on the Contract drawings, but minor modifications may be made in larger scale drawings. The PROJECT MANAGER will furnish additional details, when needed, to more fully explain the Work, and the same shall be considered part of the Contract.

Where on any drawings, a portion of the Work is drawn out or detailed and the remainder is indicated in outline, the drawn out or detailed parts shall apply also to all other like portions of the Work. Where ornament or other detail is indicated by starting only, such detail shall be continued throughout the courses or parts in which it occurs and shall also apply to all other similar parts in the Work, unless otherwise indicated.

References made to other specifications and codes refer to the edition including amendments in effect and published at the time of advertising the project or issuing the permit, unless specifically referred to by edition, volume, or date as noted in the Contract Documents.

The CONTRACTOR shall furnish and install all equipment and materials required to complete installations whether or not the quantities are specifically shown, called out, or reflected in the Contract Drawings.

7. PRECEDENCE OF CONTRACT DOCUMENTS

In resolving inconsistencies or ambiguities among two (2) or more components of the Contract Documents, the highest precedence shall be given to Permits from the other agencies as may be required by law and decreasing order as follows:

1. Permits from other agencies as may be required by law
2. Agreement
3. Special Provisions
4. General Conditions
5. Specifications - Division 01: General Requirements
6. Specifications - Divisions 02 - 17
7. Geotechnical Site Assessment
8. Drawings
9. Standard Plans
10. Standard Specifications
11. Reference Specifications

12. Reference Drawings

Supplemental Agreements, Change Orders, PROJECT MANAGER'S written interpretations and clarifications, Notice to Bidders and Addenda, in the precedence listed, will take precedence over all other Contract Document components referenced therein. Figure dimensions on Drawings will take precedence over scaled dimensions.

Detailed Drawings, including Process and Instrumentation Drawings (P & ID's), will take precedence over general Drawings.

8. ACCURACY OF PLANS AND SPECIFICATIONS

Omissions from the Plans and Specifications shall not relieve the CONTRACTOR from the responsibility of furnishing, making, or installing all items required by law or usually furnished, made, or installed in a project of the scope and character indicated by the Plans and Specifications. If the CONTRACTOR is of the opinion that it will incur costs above and beyond what would reasonably be anticipated in meeting the above requirements, it shall inform the PROJECT MANAGER in writing within twenty (20) calendar days after discovering the omission and before starting the Work.

The Plans show conditions as they are supposed or believed by the PROJECT MANAGER to exist, but it is not intended or to be inferred that the conditions as shown thereon constitute a representation or warranty, expressed or implied, by the CITY or its officers, that such conditions are actually existent, nor shall the CITY, or any of its officers, be liable for any loss sustained by the CONTRACTOR as a result of any variance between conditions as shown on the Plans, and the actual conditions revealed during progress of the Work or otherwise, except as indicated in Article 53, Differing Site Conditions of these General Conditions.

9. EXAMINATION OF COVERED WORK

If any Work is covered without inspection, approval or consent of the INSPECTOR, and examination is required by the INSPECTOR, it shall be uncovered at the CONTRACTOR'S sole expense.

Examination of covered Work may be ordered by the PROJECT MANAGER and if so ordered, the Work shall be uncovered by the CONTRACTOR. If such Work is found to be in accordance with the Contract Documents, the CITY will issue a Change Order authorizing payment for the cost of examination and replacement. If such Work is found to be not in conformance with the Contract Documents, the CONTRACTOR shall correct the non-conforming Work and the cost of examination and correction of the non-conforming Work shall be borne solely by the CONTRACTOR.

10. UNNOTICED DEFECTS

Any non-conformity in the Work that is discovered before Contract Completion, or before final payment has been made, or during the guarantee period, shall be removed and replaced by the CONTRACTOR with Work which conforms to the provisions of the Contract Documents. Failure on the part of the PROJECT MANAGER or the INSPECTOR to condemn or reject non-conforming Work shall not constitute acceptance or implied acceptance of such Work.

11. BUILDING CODES AND REGULATIONS

The CONTRACTOR shall perform the Work in accordance with the requirements of the Los Angeles City Building Code and all other regulations, laws, and ordinances, even though such requirements are not specifically mentioned in the Specifications or shown on the drawings.

It is not the responsibility of the CONTRACTOR to make certain that the Contract Documents are in accordance with applicable laws, statutes, building codes and regulations. If the CONTRACTOR observes that any of the Contract Documents are at variance therewith in any respect, it shall promptly notify the PROJECT MANAGER in writing, and any necessary changes shall be accomplished by issuance of a Change Order.

If the CONTRACTOR performs any Work knowing it to be contrary to such laws, ordinances, rules and regulations, and without such notice to the PROJECT MANAGER, it shall assume full responsibility therefore and shall bear all costs attributable thereto.

12. LENGTH OF WORKDAY AND WORK WEEK

Eight (8) hours of labor shall constitute a calendar day's work for employees of the CONTRACTOR under this Contract. Said employees shall be paid not less than the prevailing wage rate for the first eight (8) hours work of each day.

A working day shall be Monday through Friday, and work shall be between 7:00 a.m. and 4:00 p.m., unless otherwise approved by the PROJECT MANAGER or the RECREATION AND PARK COMMISSION or revised by CITY Ordinance.

When work in excess of eight (8) hours per day, or forty (40) hours during any one (1) week is performed, wages for all hours over eight (8) hours in any day or over forty (40) hours during any one (1) week shall be paid at the prevailing wage rate, as provided in the California Code and the CITY's code requirements.

13. PAYMENT OF EMPLOYEES

The CONTRACTOR and each Subcontractor shall pay each employee engaged in Work on the project under this Contract in compliance with the Federal and State wage provisions indicated on the appropriate page of the Proposal (General Instruction and Information for Bidders), and LENGTH OF WORKDAY AND WORK WEEK of these General Conditions.

The certified payroll and the Statement of Compliance shall be submitted to the INSPECTOR by the CONTRACTOR and all Subcontractors performing Work on the project, regardless of dollar amount or type of contract.

If there is a difference between the Federal and State minimum wage rates for similar classifications of labor, the CONTRACTOR and its Subcontractors shall pay not less than the higher wage rate.

When the CONTRACTOR intends to use a craft or classification not shown on the general prevailing wage determinations, it will be required to pay the wage rate of that craft or classification most closely related to it as shown in the general prevailing wage determinations. In case of disagreement between the CONTRACTOR and the CITY, the INSPECTOR shall make the final determination as to the prevailing wages for the Work.

14. CONVICT-MADE MATERIALS

No materials manufactured or produced in a penal or correctional institution shall be incorporated in the project under this Contract.

15. SALES; BUSINESS OR USE TAX

Purchases of materials and equipment which will be incorporated or installed permanently in the Contract Work, or which will be used in the operation of the CONTRACTOR or Subcontractors, and not incorporated in the Contract Work, are not exempt from City of Los Angeles and California State Sales or Use Taxes as applicable. The CITY shall consider any required business taxes to be included in the overhead costs of the CONTRACTOR.

16. NONDISCRIMINATION IN EMPLOYMENT

The CONTRACTOR shall comply with all of the provisions of the Los Angeles Administrative Code, Mandatory Provision Pertaining to Nondiscrimination in Employment.

The CONTRACTOR shall submit Monthly Ethnic Composition of Work Force Reports to the INSPECTOR indicating the number of employees in the various work categories and ethnic groups and gender on forms furnished by the CITY. Failure to furnish the reports shall constitute grounds for the CITY to withhold the progress payment.

Nondiscrimination Clause: "The CONTRACTOR shall not discriminate during the performance of this Contract against any employee or applicant for employment because of employee's or applicant's race, religion, national origin, ancestry, sex, age, sexual orientation or physical handicap." The CONTRACTOR shall include in all subcontracts awarded under this Contract the same Nondiscrimination Clause.

If conflicts exist between these provisions and the Federal Rules and Regulations governing the same, the more stringent requirements shall prevail.

17. APPRENTICE UTILIZATION

Any Contract awarded hereunder will require the CONTRACTOR to comply with the provisions of the California Labor Code relating to apprentice employment and training; and will require the CONTRACTOR to assume full responsibility for compliance with said section with respect to all Apprenticing Occupations involved in the Project. (Compliance with said Apprentice Utilization provisions of the Labor Code is not required for Public Works Contracts involving less than $30,000 or less than twenty (20) Working days in duration).

18. LAWS AND REGULATIONS

The CONTRACTOR shall observe and comply with all Federal, State, and local laws, ordinances, codes, orders, and regulations which in any manner affect those engaged or employed on the Work, the materials used in the Work, or the conduct of the Work. If any discrepancy or inconsistency should be discovered in this Contract in relation to any such law, ordinance, code, order, or regulation, the CONTRACTOR shall report the same in writing to the PROJECT MANAGER. The CONTRACTOR shall indemnify and save harmless the CITY, and its officers, agents, and employees, against all claims or liability arising from violation of any such law, ordinance, code, order, or regulation, whether by itself or by its employees or subcontractors as stated in these Contract Documents. Any particular law or regulation specified or referred to elsewhere in these specifications shall not in any way limit the obligation of the CONTRACTOR to comply with all other provisions of Federal, State, and local laws and regulations.

19. PERMITS AND CONSTRUCTION EASEMENTS

The CONTRACTOR shall anticipate, obtain and pay for all permits, excluding the General Building Permit, necessary for performance of the Work.

The CONTRACTOR shall obtain and pay all costs incurred and submit to the PROJECT MANAGER copies of all permits required for the construction and installation of all Work called for on this project. All costs shall be included in the CONTRACTOR'S bid. The permit list to be obtained by the CONTRACTOR shall include, but not be limited to the following:

1. Night Work, hauling, overload, grading, excavation, demolition, foundation, and associated building permits.
2. Electrical permits.
3. Mechanical permits.
4. Plumbing permits.
5. South Coast Air Quality Management District permits.
6. Fire sprinkler permit.
7. All Federal, State, County and CITY issued permits.

Rights of ways, easements, or rights of entry for the Work will be provided by the CITY. The CONTRACTOR shall make arrangements, pay for, and assume all responsibility for acquiring, using, and disposing of Work areas and facilities temporarily required which are necessary in addition to those provided by the CITY. The CONTRACTOR shall indemnify and hold the CITY harmless for all claims for damages caused by such actions.

20. PARTIES EXCLUDED FROM THE WORK

Lists of individuals, firms and organizations which have been debarred, suspended or have voluntarily excluded themselves from Federal Procurement and Non Procurement Program is maintained by US General Services Administration. A copy can be obtained from Superintendent of Documents, US Government Printing Office, Washington, DC 20402, Tel: (202) 783-3238.

The CITY will not conduct business with an individual, firm or organization, and the CONTRACTOR shall not employ or otherwise utilize any Subcontractor, supplier or equipment vendor at any tier which is on the U.S. General Services Administration "List of Parties Excluded from Federal Procurement and Non Procurement Programs". The CONTRACTOR shall not utilize or otherwise employ any subcontractors or suppliers on the CITY's list of nonresponsible bidders maintained by the General Services Division of the Bureau of Contract Administration.

21. BUSINESS TAX REGISTRATION CERTIFICATES

The CONTRACTOR represents that it has, or will obtain upon award, the Business Tax Registration Certificate(s) required by the Los Angeles City Business Tax Ordinance. The CONTRACTOR shall maintain, or obtain as necessary, all such Certificates required of it under said Ordinance and shall not cause or allow any such Certificate to be revoked or suspended.

The CITY requires all firms that have business activity within the City of Los Angeles to pay CITY business taxes.

Payments for goods or services will be withheld unless proof of tax compliance is provided to the CITY. All firms and individuals that do business with the CITY will be required to provide a Business Tax Registration Certificate number or an exemption number as proof of compliance with Los Angeles City business tax requirements in order to receive payment for goods or services.

The Tax and Permit Division of the City Clerk's Office has the sole authority to determine whether a firm is covered by business tax requirements.

22. FINANCIAL LIABILITY

The CITY's liability under this Contract shall not exceed the CITY's appropriation to fund the Contract at the time of Contract award. However, if the CITY shall appropriate funds for any successive years, the CITY'S maximum liability shall not exceed the extent of such appropriation, subject to the terms and conditions of this Contract.

THE CONTRACTOR'S RESPONSIBILITIES

23. CONTRACTOR'S OBLIGATIONS

Only competent workers shall be employed on the Work. Any worker, at the journey level or above, employed on the Work shall have a current license or certificate as required for the type of Work being performed, issued by the Department of Building and Safety of the City of Los Angeles and any such other organization as required.

Any person or subcontractor employed who is found by the PROJECT MANAGER AND/OR INSPECTOR to be incompetent, disorderly or otherwise objectionable, or who fails or refuses to perform Work properly, acceptably and as directed shall be immediately removed from the Work by the CONTRACTOR and not be reemployed on the Work.

The CONTRACTOR, at its sole cost and expense, shall perform all labor and services and furnish all the materials, tools, and appliances, except as hereinafter otherwise definitely provided, necessary or proper for performing and completing the Work required, in the manner and within the time stipulated in these specifications. The CONTRACTOR shall furnish, erect, maintain, and remove the construction plant and such temporary works as may be required. If, at any time before the commencement or during the progress of the Work or any part of it, the CONTRACTOR'S methods or appliances appear to the PROJECT MANAGER or the INSPECTOR to be unsafe, inefficient, or inadequate for securing the safety of the workers, the quality of the Work required, or the rate of progress stipulated, the PROJECT MANAGER or the INSPECTOR may order the CONTRACTOR to increase their safety and efficiency or to improve their character, and the CONTRACTOR shall comply with such orders at its own expense. Neither the making of such demands by the PROJECT MANAGER nor the failure to make such demands shall relieve the CONTRACTOR of its obligation to secure the safe conduct of the Work, the quality of Work required, nor the rate of progress stipulated in the Contract. The CONTRACTOR shall be fully responsible for the safety, efficiency, and adequacy of its plant, appliances, and methods, and for any damage which may result from their failure or their improper construction, maintenance, or operation. All of the labor and materials shall be performed and furnished strictly pursuant to and in conformity with the Contract Documents, the lines and grades and other directions of the PROJECT MANAGER or the INSPECTOR as given from time to time during the progress of the Work under the terms of the Contract, and in accordance with working drawings to be furnished from time to time as provided herein. The CONTRACTOR shall complete the entire Work to the satisfaction of the PROJECT MANAGER and INSPECTOR and in accordance with the Specifications and drawings herein mentioned, at the prices fixed in the Contract.

Where articles or materials are especially manufactured or fabricated for delivery under these specifications, the CONTRACTOR shall at all times employ such workforce, plant, materials, and tools as will be sufficient to complete the performance of the Contract and every part thereof within the time limits stipulated herein. If the

CONTRACTOR fails to employ sufficient workforce, plant, materials, tools, or to maintain adequate progress, the PROJECT MANAGER may require an increase in progress at any point or points or a modification of plans and procedure in such a manner as to accelerate the Work. Failure to adequately staff the project shall be just cause for the CITY to terminate the Contract.

24. CONTRACTOR'S REPRESENTATIVE AT THE SITE

A technically qualified and English-speaking project representative shall be designated in writing as the CONTRACTOR'S representative at the job site, who shall supervise the Work and shall provide competent supervision of the Work until its completion. The CONTRACTOR'S project representative shall be assigned full time and exclusively to this project. Alternate representatives with qualifications equal to or better than the previous representative may be designated. The CONTRACTOR'S representatives shall have at least five (5) years of verifiable experience as the person primarily responsible for supervision of the Work on projects of the same or similar size and nature as this project. Within five (5) days after the Notice of Award the CONTRACTOR shall provide a statement to the PROJECT MANAGER with the following:

1. Identification and resume, showing the qualifications and experience of the CONTRACTOR'S representative and the alternate appointed to act in the place of the CONTRACTOR'S representative.
2. References of not less than two (2) previous projects on which the CONTRACTOR'S representative and the alternate had supervisory responsibility on a project of a similar nature and at least one-half or more of the cost of this project. Such references shall include names, addresses, and telephone numbers of owner representatives who worked on the project as well as project information such as project type, size, location and duration.

The PROJECT MANAGER reserves the right to disapprove any candidate named as the CONTRACTOR'S representative or alternate who fails to meet the provisions set forth herein. The PROJECT MANAGER reserve the right to remove, without any right to work on the project, either the CONTRACTOR'S representative or alternate, who in the sole opinion of the PROJECT MANAGER has demonstrated incompetence, lack of ability, or other unsuitability to perform supervision of the Work.

If the CONTRACTOR'S representative or alternate leave the employ of the CONTRACTOR, the CONTRACTOR will be required to replace the individual(s) and fulfill the requirements of this Article within fifteen (15) calendar days. In no event shall any Work proceed in the absence of an approved representative.

The CONTRACTOR'S representative or alternate shall have full authority to act on behalf of the CONTRACTOR, including, but not limited to final approval of Change Orders and Supplemental Agreements. All directions given by the PROJECT MANAGER to said representative or alternate shall be considered as having been given to the CONTRACTOR. Such instructions given by the PROJECT MANAGER to the CONTRACTOR'S representative or alternate will be confirmed in writing. All instructions and directions given by the PROJECT MANAGER or the INSPECTOR will be limited to matters properly falling within the PROJECT MANAGER'S or the INSPECTOR'S authority as specified in AUTHORITY OF THE RECREATION AND PARK COMMISSION, PROJECT MANAGER AND INSPECTOR of these General Conditions.

The CONTRACTOR'S representative or alternate shall be present at the site of the Work at all times while Work under the Contract is in progress. Failure to observe this requirement shall constitute suspension of the Work by the CONTRACTOR, until such time as said representative or alternate is again present at the site, and no payment will be allowed for any Work performed in the absence of said representative or alternate. Work performed in violation of these provisions shall be removed and reconstructed, re-fabricated, or reinstalled under the required supervision. No extensions of time will be granted, nor will additional payment be allowed for any costs to the CONTRACTOR for slowdown, delays, idled equipment, or any other costs incurred by the CONTRACTOR as the direct or indirect result of such suspension.

Whenever the Work is defined as being suspended under the provisions of this Article, any such suspension in excess of ten (10) calendar days shall constitute just cause for the CITY to terminate the Contract under the provisions of TERMINATION OF CONTRACT BY CITY (CONTRACTOR DEFAULT) of these General Conditions.

25. FAMILIARITY WITH PLANS AND SPECIFICATIONS

It shall be the responsibility of the CONTRACTOR to be thoroughly familiar with all details of the Project, including the Work of CONTRACTOR'S forces and all Subcontractors. The CONTRACTOR shall call the following to the attention of both the PROJECT MANAGER and the INSPECTOR in writing within twenty-four (24) hours of discovery, before any Work is performed:

1. Errors and omissions in the Plans and Specifications;
2. Work on the Plans or in the Specifications which, if so constructed, would result in a conflict or interference with other Work or the Work of other trades, including the location of fixtures and equipment;
3. Existing improvements visible at the job site, for which no existing disposition is made on the Plans or in the Specifications but which could reasonably be assumed to interfere with the satisfactory completion of the improvements contemplated by the Plans and Specifications.

Failure to notify shall constitute a waiver by the CONTRACTOR of any claim for delay or other damages occasioned by such defect. If the CONTRACTOR proceeds with the Work without instructions from the PROJECT MANAGER, the incorrect Work shall be removed and corrections made to comply with the PROJECT MANAGER'S instructions, at no cost to the CITY. The requirements of this Article are applicable to typographical errors in the Specifications and notational errors on the Plans where ambiguity or inadequate description exists.

26. JOB CONDITIONS

The CONTRACTOR shall visit the job site as soon as practicable after award of the Contract and ascertain all conditions affecting necessary procedure and sequencing of Work operations in the execution of the Work, including condition of available roads and streets, or clearances, restrictions and other limitations affecting transportation and ingress and egress to the job site. The CONTRACTOR shall determine the nature and types of Work to be performed and shall be responsible for all Work to be accomplished.

The CONTRACTOR shall enter the job site as noted in Article 4, SITE SECURITY of the General Requirements. The CONTRACTOR will be restricted to the immediate Work areas on the job site and shall in no case go beyond the Work limits noted on the drawings or as otherwise directed by the PROJECT MANAGER. The job site shall be enclosed with a temporary chain link fence and gates which shall be removed upon completion of the Work. The CONTRACTOR shall confine all operations of the contracted Work to the boundaries of the job site(s) and shall not interfere with CITY personnel and CITY operations or the Work of other contractors working on or near the site.

CONTRACTOR'S employee access to the job site by private vehicles is prohibited.

No vehicle is allowed in the facility or on the job site except delivery trucks and CONTRACTOR'S identified vehicles and equipment. It shall be the CONTRACTOR'S sole responsibility to arrange and pay for offsite employee parking and transportation, if necessary, so as not to affect the availability of public parking on the grounds of the facility or park site. The CONTRACTOR shall fully cooperate with all authorities on the job site and other contractors not related to the Work of this Contract who might be at the job site and shall comply with all regulations in force at the job site.

27. RESPONSIBILITY FOR SITE

The CONTRACTOR shall be in full charge of and be responsible for the job site and the construction Work of this Contract, subject to the directions of the PROJECT MANAGER or the INSPECTOR. Article 33, INTERFACE/COORDINATION REQUIREMENTS of the General Requirements describes interfaces with other contractors working on the job site. No other operations of any nature shall be performed except as specifically authorized in the Contract Documents or as authorized by the PROJECT MANAGER.

The CONTRACTOR shall exercise care not to damage improvements and adjacent land. The CONTRACTOR shall correct any damage caused within seventy-two (72) hours by restoring the land and improvements damaged to their original condition and shall indemnify and hold the CITY harmless for any such damage as specified in INDEMNIFICATION of these General Conditions.

28. WORKMANSHIP AND MATERIALS

All materials, parts and equipment furnished by the CONTRACTOR for the Work shall be new, high grade and free from defects. Materials and Work quality shall be subject to the INSPECTOR'S approval.

29. INJURY AND ILLNESS PREVENTION - SAFETY MEASURES

Safety is the responsibility of the CONTRACTOR. The CONTRACTOR shall observe and comply with the safety provisions of all applicable laws, building and construction codes, safety and health regulations of the California Code of Regulations, and with applicable CITY Safety Policies.

If a Work procedure or condition exists that is a violation of said safety standards, the PROJECT MANAGER or INSPECTOR may order the CONTRACTOR to comply with said safety provisions, and the CONTRACTOR shall comply with such orders at its own expense. If the CONTRACTOR fails to act promptly, the PROJECT MANAGER or INSPECTOR is authorized to suspend the Work. Failure of the PROJECT MANAGER or the INSPECTOR to make such demands shall not relieve the CONTRACTOR of its obligations to secure the safe conduct of the Work.

In the event of an emergency constituting an immediate hazard to the health or safety of the public or CITY employees, property, or licensee, the CITY may undertake, at the CONTRACTOR'S sole expense, without prior notice, all Work necessary to correct such hazardous conditions when it was caused by Work of the CONTRACTOR not being in accordance with the requirements of this Contract.

First aid facilities and supplies shall be kept and maintained by the CONTRACTOR at the site of the Work. The CONTRACTOR shall cause all persons within the construction area to wear protective helmets. In addition, all employees of the CONTRACTOR and its Subcontractors shall be provided with, and required to use, personal protective and life saving equipment set forth in California Construction Safety Orders and the OSHA Safety and Health Standards for Construction.

30. PROTECTION OF PERSONS AND PROPERTY AND RESTORATION OF EXISTING IMPROVEMENTS

The CONTRACTOR shall not destroy, remove, or otherwise disturb any existing survey monuments or reference points without authorization from the PROJECT MANAGER. No pavement breaking or excavation shall be started until all survey monuments or other reference points that will be disturbed by the construction operations have been properly referenced by the PROJECT MANAGER. It shall be the CONTRACTOR'S responsibility to notify the PROJECT MANAGER and the INSPECTOR of the time and location that Work will be done. Such notification shall be sufficiently in advance of construction so that there will be no delay due to waiting for survey points to be satisfactorily referenced for restoration. All survey monuments or reference points disturbed, without authorization by the PROJECT MANAGER, shall be accurately restored by the CITY at the CONTRACTOR'S sole expense after all street or roadway resurfacing has been completed.

All paved areas including asphaltic concrete beams cut or damaged as a result of construction shall be replaced with similar materials and of equal thickness to match the existing adjacent undisturbed areas, except where specific resurfacing requirements have been called for in the Contract Documents or in the requirements of the agency issuing the permit. All temporary and permanent pavement shall conform to the requirements of the affected pavement owner. All pavement which is subject to partial removal shall be neatly saw cut in straight lines.

In order to obtain a satisfactory junction with adjacent surfaces, the CONTRACTOR shall saw cut back and trim the edge so as to provide a clean, sound, vertical joint before permanent replacement of an excavated or damaged portion of pavement. Damaged edges of pavement along excavations and elsewhere shall be trimmed back by saw cutting in straight lines. All pavement restoration and other facilities restoration shall be constructed to finish grades compatible with adjacent undisturbed pavement.

Where sidewalks have been removed for purposes of construction, the CONTRACTOR shall place suitable temporary sidewalks, properly protected, promptly after backfilling and shall maintain them in satisfactory condition until the final restoration thereof has been made.

All utilities encountered along the line of the Work shall be maintained continuously in service during all the operations under the Contract, unless other arrangements satisfactory to the PROJECT MANAGER are made. Utilities shall include, but not be limited to, all above or below-ground conduit, pipes, ducts, cables, and appurtenances associated with oil, gas, water, steam, irrigation, process, sewer, storm drain, wastewater, air, electrical, power, instrumentation, communication, telephone, cable, TV, and lighting systems, whether or not owned by the CITY.

The CONTRACTOR shall protect all existing utilities and improvements not designated for removal. Necessary potholing shall be accomplished at the CONTRACTOR'S expense. The CONTRACTOR shall determine the exact locations and depths of all utilities indicated on the drawings. The CONTRACTOR shall make exploratory excavations of all utilities. All such exploratory excavations shall be performed as soon as practicable after award of the Contract and in any event, a sufficient time in advance of construction to avoid possible delays to the CONTRACTOR'S Work. When such exploratory excavations show the utility location as indicated on the drawings to be in error, the CONTRACTOR shall so notify the INSPECTOR and the PROJECT MANAGER. The CONTRACTOR should not rely upon plan designation of location of underground utilities. The number of exploratory excavations and extent of potholing required shall be that number which is sufficient to determine the alignment and grade of the utility. No costs shall be allowed for such Work except those included in the CONTRACTOR'S proposal.

Prior to any excavation in the vicinity of any existing underground facilities, the CONTRACTOR shall notify the INSPECTOR and the PROJECT MANAGER, and the respective authorities representing the owners or agencies responsible for such facilities, not less than three (3) working days, nor more than five (5) working days, of their intention to begin excavation. The CONTRACTOR shall make arrangements for and provide access such that a representative of said owners or agencies may be present during such Work.

Where the proper completion of the Work requires the temporary or permanent removal and/or relocation of an existing utility or other improvement which is shown on the drawings, the CONTRACTOR shall at its own expense, remove and, without unnecessary delay, temporarily replace or relocate such utility or improvement to a place and in a manner as directed by the PROJECT MANAGER, and the owner of the facility. In all cases of such temporary removal or relocation, restoration to former location shall be accomplished by the CONTRACTOR in a manner that will restore or replace the utility or improvement as nearly as possible to its former locations and to as good or better condition than found prior to removal. When utilities that are to be removed are encountered within the area of operations, the CONTRACTOR shall notify the PROJECT MANAGER not less than fifteen (15) days in advance for necessary measures to be taken to prevent interruption of service.

The CONTRACTOR shall notify the PROJECT MANAGER thirty (30) calendar days in advance of any proposed connection, and shall notify the PROJECT MANAGER and the INSPECTOR twenty-four (24) hours prior to the actual connection, to any existing utility.

Any utility or improvement which is damaged by the CONTRACTOR shall be immediately repaired at the CONTRACTOR'S expense, to a condition equal to, or better than, the condition it was in prior to such damage or temporary relocation. If the CONTRACTOR fails or refuses to promptly repair the utility or improvement, the CITY may perform the necessary Work at the CONTRACTOR'S expense and no time extension shall be allowed to the CONTRACTOR. The CONTRACTOR is not relieved of provisions of this Article even in the event such damage occurs after backfilling or is not discovered until after completion of backfilling.

All repairs to a damaged improvement shall be inspected and approved by the INSPECTOR and an authorized representative of the improvement owner before being concealed by backfill or other Work. In case of damage, which in the opinion of the PROJECT MANAGER or the INSPECTOR, threatens the safety of persons or property, the CONTRACTOR shall immediately make all repairs necessary for removal of the hazard. Should the CONTRACTOR fail to promptly take all necessary action, the CITY has the option to remove any hazard resulting

from damages caused by the CONTRACTOR at the CONTRACTOR'S expense without waiving any other rights the CITY may have, and no time extension will be allowed to the CONTRACTOR.

In the event that the CONTRACTOR damages any existing utilities that are not shown on the drawings or the locations of which are not made known to the CONTRACTOR prior to excavation, the CONTRACTOR shall immediately notify the INSPECTOR and take all measures necessary to prevent further damage. The CONTRACTOR shall then immediately make a written report to the PROJECT MANAGER and shall make repairs as directed by the PROJECT MANAGER. Payment for this extra Work will be made pursuant to the provisions contained in Article 27, PAYMENT FOR CHANGES AND EXTRA WORK of the General Requirements.

Notwithstanding that an existing utility or substructure is not shown on the original Plans and Specifications, if the existence and location thereof was made known to the CONTRACTOR prior to excavation, the utility or

substructure constitutes an existing known condition, and the CONTRACTOR is responsible for protecting the utility or substructure.

Damage to a utility known to the CONTRACTOR shall be repaired at the CONTRACTOR'S expense.

31. NON-CONFORMING WORK

Except as set forth in this Article, all non-conforming Work and materials, in place or not, shall be removed immediately from the site or corrected to conform to all requirements of the Contract Documents, by the CONTRACTOR, at the sole expense of the CONTRACTOR.

If the CONTRACTOR fails to remove, replace or correct any non-conforming Work or materials within seventy two (72) hours of discovery, the PROJECT MANAGER may cause such Work or materials to be removed and replaced. Such removal and replacement shall be at the sole expense of the CONTRACTOR and all such cost shall be deducted from any amounts that are due or may become due to the CONTRACTOR.

Failure of the INSPECTOR or the PROJECT MANAGER to notify the CONTRACTOR of any non-conforming Work shall not constitute acceptance of any non-conforming Work. The CONTRACTOR'S obligation to remove, replace or correct any non-conforming Work, whenever discovered, shall continue to the end of the guaranty-warranty period provided for in Article 16, GUARANTY-WARRANTY of the General Requirements. The CITY reserves and retains all rights and remedies at law against the CONTRACTOR and their Surety for correction of any and all latent defects discovered after the guaranty-warranty period.

The Contract Documents may be modified for the purpose of allowing non-conforming Work to become acceptable in lieu of the CONTRACTOR'S obligation to remove and replace all such non-conforming Work. Such modification shall be effective only upon the written agreement of the CONTRACTOR and the PROJECT MANAGER. Such written agreement shall be issued as a Change Order, which shall include all of the following provisions.

1. A statement that the Work as constructed is non-conforming Work.
2. The specifications by which the non-conforming Work will be made to conform to the requirements of the Contract Documents.
3. A statement that all modifications to the non-conforming Work shall be at the sole expense of the CONTRACTOR.
4. A statement that the CONTRACTOR waives and releases any and all claims against the CITY, including time and impacts, in any way whatsoever related to the non-conforming Work, the modification of such non-conforming Work, and the time to negotiate such a modification.
5. The amount representing the value of the Work specified in the Contract Documents less the value of the Work as constructed, as a credit to the CITY, which shall be deducted from the amount of the Contract.

No Work shall proceed which shall make the non-conforming Work more costly to correct nor to modify such non-conforming Work until the PROJECT MANAGER and the CONTRACTOR execute such a Change Order. The PROJECT MANAGER may grant permission, in response to a written request from the CONTRACTOR, to proceed with the Work before finalization of such a Change Order, if they find the request to be in the best interest of the CITY.

Any delays or impacts arising on the Work as a result of construction or delivery of non-conforming Work or materials shall be at the CONTRACTOR'S sole expense, regardless of whether the Work ultimately becomes the subject of a Change Order, and no time extension shall be allowed to the CONTRACTOR.

Acceptance by the INSPECTOR of such previous non-conforming Work, after execution of the Change Order, does not act to waive or otherwise negate the CONTRACTOR'S obligations to guarantee such Work as set forth in Article 16, GUARANTY-WARRANTY of the General Requirements.

Failure of the CONTRACTOR to comply with the requirements of this Article shall constitute default of the Contract by the CONTRACTOR and the CITY may terminate the Contract as provided for in TERMINATION OF CONTRACT BY CITY (CONTRACTOR DEFAULT).

32. SUBCONTRACTORS AND SUB-SUBCONTRACTORS (Revised as of 2/12/2016)

The Contractor shall perform on the site and with its own organization not less than thirty (30%) of the total Contract Price, unless a different percentage is designated on Schedule "A" SUBCONTRACTORS AND SUPPLIERS in the Instructions to Bidders, page 16. Any items designated "specialty items" in the Bid Proposal may be performed by subcontract and the amount of all such "specialty items" may be deducted from the Contract Price before computing the amount of Work required to be performed by the Contractor with its own organization. The dollar value included in the percentage performed by the Contractor shall include the value of labor, materials and equipment to be incorporated or used in the Work and directly purchased by the Contractor and shall not include the value of Work, including labor, materials and equipment, incorporated or used in the Work, performed or provided by Subcontractors.

Bidders must list all Subcontractors in the Bid, regardless of the dollar amount of the work to be performed, if the Bidder wishes to have the Subcontract amount credited toward meeting the MBE/WBE/SBE/EBE/DVBE/OBE levels of participation of the Project. Subcontractors added to the project following acceptance of the Bid and award of the Project will not be credited toward meeting the MBE/WBE/SBE/EBE/DVBE/OBE levels of participation for this Project.

Listed vendors and/or Suppliers will be limited to 60% of their listed dollar value toward achieving the anticipated MBE/WBE/SBE/EBE/DVBE/OBE levels of participation for this Project, unless the vendor and/or Supplier manufactures or substantially alters the materials/supplies.

The designated percentage of the total Contract Price the Contractor is to perform may not be reduced below that level by the addition of Subcontractor's added after Award of the Project.

The Inspector, acting on behalf of the Board of Recreation and Park Commissioners, will be responsible for approval of all Subcontractors, whether Bid-listed or not, and all Sub-subcontractors employed on the Project.

The Contractor must list in the original bid each Subcontractor who will perform Work or render services in an amount in excess of one-half of 1 percent of the Contractor's total Bid or $10,000.00, whichever is greater.

Subletting or Subcontracting of any portion of the Work in excess of one-half of 1 percent of the Contractor's original total Bid or $10,000.00, whichever is greater, for which no Subcontractor was designated in the original Bid shall only be permitted in cases of public emergency or necessity, and then only after a finding reduced to writing as a public record of the Inspector setting forth the facts constituting the emergency or necessity.

If the Contractor fails to specify a Subcontractor, or if the Contractor specifies more than one Subcontractor for the same portion of Work to be performed under the Contract in excess of one-half of 1 percent of the Contractor's total original Bid or $10,000.00, whichever is greater, the Contractor agrees that it is fully qualified to perform that portion of Work itself, and that it shall perform that portion itself.

The Contractor shall set forth in its Bid the following: The name, location of the place of business, telephone number, California State Contractor's License Number and dollar amount of each Subcontractor who will perform Work, labor, service, supply specifically fabricated materials or equipment in an amount in excess of one-half of 1 percent of the Contractor's total Bid, or $10,000.00, whichever is greater.

The Contractor shall list only one Subcontractor for each portion of Work as defined by the Contractor in its Bid.

Acceptance by the Board of Recreation and Park Commissioners of its Bid is dependent upon each Bid listed Subcontractor, and all subsequently approved additional Subcontractors, performing the dollar value of Work listed or approved. Any reduction, increase, or other change to any Subcontract amount without prior approval by Board of Recreation and Park Commissioners is considered an Unauthorized Subcontractor Substitution and is subject to a penalty of ten (10) percent of the Subcontract amount, whether Bid-listed or not. A Subcontract dollar value

increased or reduced as the result of a Change Order issued by the Engineer to add or delete from the original scope of Work shall not be subject to a penalty for an Unauthorized Subcontract Substitution.

Acceptance by the Board of Recreation and Park Commissioners of its Bid shall not entitle Subcontractors to recognition for any direct or contractual relationship with the City, nor shall it constitute approval of the use of any materials other than those specified.

The Contractor shall be responsible for all acts of all Subcontractors at all tiers. The Contractor shall coordinate all work performed by subcontractors in the interest of the City.

All Subcontractors who will be working on the Project shall be approved in writing by the Inspector prior to beginning Work, regardless of the dollar amount of Work to be performed, and whether or not they were listed in the original Bid.

Requests for approval of all Subcontractors, or request for substitution of a Subcontractor, shall be made in writing to the Inspector located at the Public Works Building, 1149 S. Broadway, 3rd Floor, Los Angeles, CA, 90015, and said request shall contain the following information for each Subcontractor:

1) Project Name
2) Project Work Order Number
3) Subcontractor's Name
4) Subcontractor's Address
5) Subcontractor's Phone Number
6) Subcontractor's Status (WBE, MBE, SBE, EBE, DVBE, OBE)
7) Subcontractor's State of California Contractor License Number
8) Subcontractor's City Business Tax Registration Certificate Number (BTRC)
9) Dollar amount of Subcontract work to be performed
10) Description of Subcontract work to be performed

Failure to provide any of the information listed will result in denial of approval until such time as the information is provided.

Failure to obtain approval of the Inspector prior to each Subcontractor performing Work on the Project may result in suspension of Work by that Subcontractor, removal of Work performed by unapproved Subcontractors, assessment of penalties, and possible sanctions against the Contractor.

Additional Subcontractors may be added after the time of original Bid. The value of Work to be performed by additional Subcontractors may not be greater than one-half of 1 percent of the Contractor's original total Bid or ten thousand dollars ($10,000.00), whichever is greater, unless the Subcontractor will be performing Work added by Change Order causing changes or deviations from the original Contract.

The Contractor shall provide the dollar amount of Work to be performed in all requests for additional Subcontractors. Failure to specify a dollar amount of Work to be performed will result in denial of additional Subcontractors until such time as the amount is provided.

Failure of the Contractor to request and obtain approval for a reduction in either a Bid-listed Subcontract amount or the Subcontract amount of a Subcontract added after the original Bid shall result in a penalty of ten percent of the Subcontract amount.

A Contractor whose Bid is accepted may not:

1) Substitute any person as Subcontractor in place of a Subcontractor listed in the original Bid, except that the Inspector, acting on behalf of the Board of Recreation and Park Commissioners, may consent to the substitution of another Subcontractor for one of the following situations:

A) When the Subcontractor listed in the original Bid or proposal after having had a reasonable opportunity to do so fails or refuses to execute a written contract, when that written contract, based upon the general terms, conditions, plans and specifications for the project involved or the terms of that Subcontractor's written bid, is presented to the subcontractor by the Contractor.

B) When the listed Subcontractor becomes bankrupt or insolvent.

C) When the listed Subcontractor fails or refuses to perform its subcontract.

D) When the listed Subcontractor fails or refuses to meet the bond requirements of the Contractor as set forth herein.

E) When the Contractor demonstrates to the Inspector's satisfaction that the name of the Subcontractor was listed as a result of an inadvertent clerical error.

F) When the listed Subcontractor is not licensed pursuant to the State of California Contractor's License Law.

G) When the listed Subcontractor refuses to obtain a City of Los Angeles Business Tax Receipt Certificate (BTRC).

H) When the Inspector concurs with the Contractor that the Work being performed by the listed Subcontractor is unsatisfactory and not in substantial accordance with the Contract Documents, or the listed Subcontractor is delaying or disrupting the progress of the work.

I) When the listed Subcontractor fails to submit an Affirmative Action Plan acceptable to the Inspector.

J) When the Board of Recreation and Park Commissioners determines that a listed Subcontractor is not a responsible contractor.

2) Permit a Subcontract to be voluntarily assigned or transferred or allow it to be performed by anyone other than the original Subcontractor listed in the original Bid, without the consent of the Inspector.

3) Other than in the performance of Change Orders causing changes or deviations from the original Contract, sublet or Subcontract any portion of the Work in excess of one half of 1 percent of the Contractor's total Bid as to which its original Bid did not designate a Subcontractor.

4) Reduce the dollar amount of a Bid-listed Subcontract without the written approval of the Inspector.

A request for substitution of any Subcontractor, whether Bid-listed or not, must be made in writing to the Inspector and must include letter(s) of explanation as to the reason for the requested substitution.

It is considered a substitution if anyone other than the Bid-listed and/or approved Subcontractor(s), including the Contractor, performs any portion of the Work designated to be performed by said Subcontractor.

Failure to obtain approval for a Subcontractor substitution may result in rejection of the affected Work, penalties assessed for failure to obtain approval, and possible sanctions by the City.

All substitutions of Subcontractors, whether MBE/WBE/SBE/EBE/DVBE/OBE or not, shall be approved in writing by the Board of Recreation and Park Commissioners prior to any Work being performed by the substituting Subcontractor.

The Contractor shall conduct a Business Inclusion Program Outreach prior to approval of any requested Subcontractor substitution, regardless of the status (MBE/WBE/SBE/EBE/DVBE/OBE) of the contractor being substituted for. For MBE/WBE/SBE/EBE/DVBE/OBE Subcontractor substitution requests, the Contractor shall comply with the Business Inclusion Program Outreach requirements of Pages 15-15R of the Instructions to Bidders (Volume I). The Business Inclusion Program Outreach for any requested Subcontractor substitution must be reviewed and approved by the Special Research and Investigation Section of the General Services Division of the Bureau of Contract Administration, whether the Subcontractor was Bid listed or approved after the Award of the Project.

There shall be no decrease in dollar value of Work to be performed by Subcontractors approved as a substitute for a Bid-listed Subcontractor without a change in scope of the Work to be performed by the originally Bid-listed Subcontractor. Written evidence of a change of scope must be provided by the Engineer prior to approval of a change in dollar value of a Bid-listed Subcontractor.

Prior to approval of the Contractor's request for substitution, the Inspector shall give notice in writing to the Subcontractor affected by the Contractor's request to substitute and of the reasons for the request. The notice shall be served by certified or registered mail to the last known address of the Subcontractor. The listed Subcontractor who has been so notified shall have five (5) Workdays within which to submit written objections to the substitution. Failure to file these written objections within five (5) Workdays of notification shall constitute the listed Subcontractor's consent to the substitution. Notification by the Inspector may be made by phone in lieu of written notification via certified or registered mail if agreed to by the listed Subcontractor and followed by written request. Upon notification by phone, the listed Subcontractor may file written objections within five (5) days of notification.

If written objections are filed, the Inspector shall give notice of at least five (5) Workdays to the listed Subcontractor of a hearing on the Contractor's request for substitution.

The Contractor, as a condition to assert a claim of Inadvertent Clerical Error in the listing of a Subcontractor, shall within two Workdays after the time of the original Bid opening by the Board of Recreation and Park Commissioners give written notice to the Inspector and the Board of Recreation and Park Commissioners and copies of such notice to both the Subcontractor he claims to have listed in error and the intended Subcontractor who had bid to the Contractor prior to Bid opening.

Written notice of an Inadvertent Clerical Error shall be forwarded within two (2) days after the time of the original Bid opening by every Contractor claiming such an error. Failure to submit such notice within the time prescribed shall make any such subsequent claim of Inadvertent Clerical Error invalid.

Any listed Subcontractor who has been notified by the Contractor of an Inadvertent Clerical Error shall be allowed six (6) Workdays from the time of the Bid opening to submit to the Inspector and to the Contractor written objection to the Contractor's claim of Inadvertent Clerical Error. Failure of such listed Subcontractor to file such written notice within the six (6) Workdays shall constitute agreement that an advertent clerical error was made.

The Inspector shall, in the absence of compelling reasons to the contrary, consent to the requested substitution based on an Inadvertent Clerical Error if:

1) The Contractor, the Subcontractor listed in error, and the intended Subcontractor each submit an affidavit to the Inspector along any additional information as the parties may wish to submit that an Inadvertent Clerical Error was in fact made, provided that the affidavits from each of the three parties are filed within eight (8) Workdays from the time of the original Bid opening, or

2) If such affidavits are filed by both the Contractor and the intended Subcontractor within eight days of the original Bid opening but the Subcontractor whom the Contractor claims to have listed in error does not submit within six (6) Workdays, to the Inspector and to the Contractor, written objection to the Contractor's claim of Inadvertent Clerical Error as provided in this article.

If such affidavits are filed by both the Contractor and the intended Subcontractor but the listed Subcontractor has, within six (6) Workdays from the time of the original Bid opening, submitted to the Inspector and to the Contractor written objection to the Contractor's claim of Inadvertent Clerical Error, the Inspector shall investigate the claims of all parties and schedule a public hearing before the Board of Recreation and Park Commissioners to determine the validity of such claims. Any determination shall be based on the facts contained in the declarations submitted under penalty of perjury by all three parties and supported by testimony given to the Board of Recreation and Park Commissioners. The Board of Recreation and Park Commissioners may, on its motion or that of any other party, admit testimony of other Contractors, any Bid registries or depositories, or any other party in possession of facts, which may have a bearing on the decision of the Board of Recreation and Park Commissioners. The findings of the Board of Recreation and Park Commissioners shall be final.

33. RESPONSIBILITY OF CONTRACTOR TO ACT IN EMERGENCY

In case of an emergency that threatens loss of or damage to property or injury to persons, the CONTRACTOR shall act, without instructions from the CITY, as the situation may warrant. The CONTRACTOR shall immediately inform the PROJECT MANAGER and the INSPECTOR of the emergency action taken. Any claim shall be submitted to the PROJECT MANAGER. If practical the amount of compensation, if any, shall be determined by agreement prior to the issuance of a Change Order. However, if the emergency is created or aggravated by the CONTRACTOR, it shall be liable for the resulting damages. If the CONTRACTOR fails to take the necessary action as required by such an emergency the CITY may assign another CONTRACTOR or use its own forces to perform the emergency Work at the CONTRACTOR'S sole expense.

34. ASSIGNMENT

The CONTRACTOR shall not assign, transfer, convey or otherwise dispose of this Contract or any of the proceeds there under unless written consent of the CITY has been obtained. No right under this Contract or claim for any proceeds due or to become due hereunder shall be asserted against the CITY, or persons acting for the CITY, by reason of any so-called assignment, transfer or conveyance of this Contract or any part thereof unless such assignment, transfer or conveyance has been authorized by the written consent of the CITY. The instrument of assignment, transfer or conveyance shall contain a clause subordinating the claim of the assignee, transfer or conveyor to all prior liens for services rendered or materials supplied for the execution of the Work.

35. INDEPENDENT CONTRACTOR

The CONTRACTOR represents that it is fully experienced and properly qualified to perform the class of Work required for the CONTRACT and that it is properly licensed, equipped, organized and financed to perform the Work. The CONTRACTOR shall be an independent contractor. The CONTRACTOR is not an agent of the CITY in the performance of the CONTRACT, and shall maintain complete control over its employees and its Subcontractors and Suppliers of any tier. Nothing contained in the CONTRACT or any Subcontract awarded by the CONTRACTOR shall create any relationship between any Subcontractor and the CITY. The CONTRACTOR shall perform the Work in accordance with its own methods, in compliance with the terms of the CONTRACT.

INDEMNIFICATION AND INSURANCE REQUIREMENTS

36. INDEMNIFICATION

Except for the active negligence or willful misconduct of the CITY, the CONTRACTOR undertakes and agrees to defend, indemnify and hold harmless, through legal counsel acceptable to the CITY, the CITY, and any and all of the CITY'S Boards, Officers, Agents, Employees, Assigns, and Successors in Interest from and against all suits and causes of action, claims, losses, demands and expenses, including, but not limited to, attorney's fees and cost

of litigation, damage or liability of any nature whatsoever, arising out of or related to the performance or nonperformance by CONTRACTOR or its Subcontractors, Sub-Subcontractors, or Suppliers, of any tier, of any portion of the construction of the Project, including but not limited to CONTRACTOR'S negligent acts, errors, omissions, breach of contract, breach of warranty (express or implied), or willful misconduct.

It is agreed that such defense and indemnity shall extend to the CITY'S PROJECT MANAGER, Architect/Engineer or other Design Consultant providing services under written agreement with the CITY covering any portion of the Project. Provided, however, that the Design Consultant shall be solely responsible for the enforcement of any request made by said Consultant for indemnification or defense by the CONTRACTOR. It is further provided that the CITY shall have no liability whatsoever for any failure of the CONTRACTOR to comply with any request from the Consultant for indemnity or defense.

It is further agreed that the defense and indemnity obligations of the CONTRACTOR under this Article shall not extend to the liability of the Design Consultant or its agents, employees or subconsultants, arising as a result of such indemnitee's own active negligence, errors or omissions or from (1) the preparation or approval of maps, Plans, opinions, reports, surveys, change orders, designs or Specifications, or (2) the giving of or failure to give directions or instructions by the indemnitee provided that such giving or failure to give is the primary cause of the dame or injury.

37. INSURANCE

A. GENERAL

During the term of this Contract and without limiting the CONTRACTOR's indemnification of the CITY, the CONTRACTOR shall provide and maintain at its own expense, insurance having the limits customarily carried and actually arranged by the CONTRACTOR but not less than the amounts and types listed on the Insurance Requirements Form in Volume 1 of these Contract Documents, covering its operations hereunder subject to the following conditions as they may variously apply:

1. ADDITIONAL INSURED/ADDITIONAL INTEREST/LOSS PAYEE

The CITY, it's Recreation and Park Commissions, Officers, Agents, Employees and Design Consultant shall be included as:

a. Additional Insureds in all required General Liability and property insurance and Additional Interests in all required Automobile Liability insurance.

b. Named Insureds in all required Owners and Contractors Protective Liability insurance policies.

c. Loss Payee As Its Interest May Appear in all required property, fidelity or Surety coverages.

d. Listing of other entities as additional insures may be required for specific projects due to their funding source (such as, Prop A funded projects require that Los Angeles County be listed as an additional insured).

The CITY and other interests listed above need not be named on Workers' Compensation/Employer's Liability, Professional Errors and Omissions and Second-party Legal Liability coverages (such as Garage Keepers' Legal).

2. INSURANCE APPROVAL

All insurance required hereunder shall conform to the CITY requirements established by Charter, ordinance or policy. Evidence of insurance shall be submitted to the Department's Risk Control Coordinator and approved by the City Attorney prior to commencement of any Work or tenancy under this Contract in accordance with the Los Angeles Administrative Code.

3. ALTERNATIVE PROGRAMS

Alternative Risk Financing mechanisms such as Risk Retention Groups, Risk Purchasing Groups, off-shore carriers and captive insurance programs are subject to review of their financial statements by the CITY before an approval can be granted by the City Attorney.

4. ADMITTED CARRIER/LICENSED CALIFORNIA BROKER

Insurance shall be obtained from brokers or carriers authorized to transact insurance business in California. Surplus lines insurance from carriers who are not admitted in California must be submitted through a California-licensed broker or agent.

Surplus lines coverage must also contain a Service of Suite provision whereby the underwriters will submit as necessary to any court of competent jurisdiction in California and agree that all matters arising there under will be determined in accordance with the law and practice of such court. It must further give the name and address of the underwriter's agent for service of process located within California or must nominate the California Insurance Commissioner as such agent.

5. PRIORITY OF COVERAGE

The CONTRACTOR's insurance shall not call on the CITY's program for contributions.

6. CANCELLATION/REDUCTION IN COVERAGE NOTICE

With respect to the interest of the CITY, if an insurance company elects to cancel insurance before the stated expiration date, or declines to renew in the case of a continuous policy, or materially reduces the coverage period by changing the retroactive date (if any), or the extended discovery period (if any), or reduces the stated limits other than by impairment of an aggregate limit, or materially reduces the scope of coverage which affects the CITY's interest, the company will provide the CITY at least thirty (30) calendar days prior written of such election. Notice will be made by receipted delivery addressed as follows: CITY ATTORNEY, INSURANCE AND BONDS, 1240 City Hall East, 200 NORTH MAIN STREET, LOS ANGELES, CA 90012-4168. It is understood, however, that such notice to the CITY shall not affect the company's right to give a lesser notice to the Named Insured in the event of nonpayment of premium. (L.A. Admin. Code Section 11.54).

7. ACCEPTABLE EVIDENCE

The appropriate CITY Special Endorsement forms, contained in Volume 1 of these Contract Documents, are the preferred form of evidence of insurance. Alternatively, the CONTRACTOR may submit two (2) certified copies of the policy or other evidence acceptable to the City Attorney containing language which complies with subparagraphs 1) through 6) above.

With respect to Professional Liability insurance, either a signed copy of the Policy Declarations Page or a letter from the CONTRACTOR's insurance broker certifying coverage, together with a thirty (30) day cancellation notice endorsement in favor of the CITY as specified in subparagraph 6) will satisfy this requirement.

8. SEPARATION OF INSUREDS

Except with respect to the insurance company's limits of liability, each liability insurance policy shall apply separately to each insured against whom a claim or suit is brought. The inclusion of any person or organization as an insured shall not affect any right which such person or organization would have as a claimant if not so included.

9. RENEWAL

Once the insurance has been approved by the CITY, evidence of renewal of an expiring policy may be submitted on a manually signed renewal endorsement or certificate form. If the policy or carrier has changed, however, new evidence as specified in paragraphs 1) through 8) above, must be submitted.

B. AGGREGATE LIMITS/REDUCTION IN COVERAGE

If any of the required insurance coverages contain aggregate limits, or apply to other operations or tenancy of the CONTRACTOR not related to this Contract, the CONTRACTOR shall give the CITY prompt, written notice of any incident, occurrence, claim, settlement or judgement against such insurance which in the CONTRACTOR's best judgement may diminish the protection such insurance affords the CITY. Further, the CONTRACTOR shall immediately take all reasonable and available steps to restore such aggregate limits or shall provide other insurance protection for such aggregate limits. The CITY may, at its option, specify a minimum acceptable aggregate for each line of coverage required.

The CONTRACTOR shall not make any substantial reductions in scope of coverage (e.g., elimination of contractual liability or reduction of discovery period) which may affect the CITY's protection without the CITY's prior written consent.

C. SELF-INSURANCE AND SELF-INSURED RETENTIONS

Self-insurance programs and self-insured retention in insurance policies are subject to separate approval by the CITY upon review of evidence of the CONTRACTOR's financial capacity to respond. Additionally, such programs or retention must provide the CITY with at least the same protection from liability and defense of suits as would be afforded by first-dollar insurance.

D. MODIFICATION OF COVERAGE

The CITY reserves the right at any time during the term of this Contract to change the amounts and types of insurance required hereunder by giving the CONTRACTOR ninety (90) calendar days advance written notice of such change. If such change should result in substantial additional cost to the CONTRACTOR, the CITY agrees to negotiate additional compensation.

E. FAILURE TO PROCURE INSURANCE

The required coverage and limits are subject to availability on the open market at reasonable cost as determined by the CITY. Non-availability or non-affordability must be documented by a letter from the CONTRACTOR'S insurance broker or agent indicating a good faith effort to procure the required insurance and showing, as a minimum, the names of the insurance carriers and the declinations or quotations received from each.

Within the foregoing constraints, the CONTRACTOR'S failure to procure or maintain required insurance or a self-insurance program during the entire term of this Contract shall constitute a material breach of this Contract under which the CITY may immediately suspend or terminate this Contract or, at its discretion, procure or renew such insurance to protect the CITY'S interests and pay any and all premiums in connection therewith, and recover all monies so paid from the CONTRACTOR.

F. UNDERLYING INSURANCE

The CONTRACTOR shall be responsible for requiring indemnification and insurance as it deems appropriate from its consultants, agents and Subcontractors, if any, to protect the CONTRACTOR's and the CITY'S interests, and for ensuring that such persons comply with any applicable insurance statutes. The CONTRACTOR is encouraged to seek professional advice in this regard.

G. WORKERS' COMPENSATION

By signing this Contract, the CONTRACTOR hereby certifies that it is aware of the provisions of Section 3700 *et seq.*, of the Labor Code which require every employer to be insured against liability for Workers' Compensation or to undertake self-insurance in accordance with the provisions of that Code, and that it will comply with such provisions at all such times as they may apply during the performance of the Work pursuant to this Contract.

A waiver of subrogation in favor of the CITY will be required when Work is performed on CITY premises under hazardous conditions.

H. ALL RISK BUILDER'S RISK/INSTALLATION FLOATER

During the course of construction, the CONTRACTOR shall secure and maintain an All Risk Builder's Risk Insurance policy covering loss, damage or destruction of property, including materials in transit and stored on and off site, in an amount equal to the value of the construction and materials on hand.

An Installation Risk or "Floater" Policy, written to cover only specific types of equipment during construction, may be provided to cover damage to Work or high valued equipment or materials.

Coverage shall remain in force until the Work is completed and accepted by the CITY. Acceptable evidence of coverage shall be in the form of an endorsement to the policy which names the CITY as an additional named insured and as Loss Payee As Its Interest May Appear.

I. TYPICAL COVERAGES REQUIRED

The coverages required in A above shall be at least as broad as:

1. General Liability: Insurance Services Office Commercial General Liability coverage (Occurrence Form CG 00 01).
2. Automobile Liability: Insurance Services Office Form Number CA 00 01 (Ed. 1/87) covering Automobile Liability, code 1 (any auto).
3. Professional Liability: If applicable, errors and omissions liability appropriate to the consultant's profession, with a discovery period of not less than twelve (12) months after completion of Work or termination of Contract.

J. TYPICAL LIMITS OF LIABILITY

Unless otherwise specified in Form Gen. 146/IR, the CONTRACTOR shall maintain limits no less than:

1. General Liability: $1,000,000 per occurrence for bodily injury, personal injury and property damage. If Commercial General Liability or other form with a general aggregate limit is used, either the general aggregate shall apply separately to this project/location or the general aggregate limit shall be twice the required occurrence limit.
2. Automobile Liability: $1,000,000 per accident for bodily injury and property damage, combined or equivalent in split limits.
3. Employer's Liability: $1,000,000 per accident for bodily injury or disease.
4. Professional Liability: $1,000,000 per occurrence.

K. CONTRACT BONDS

Before the execution of the Contract by the RECREATION AND PARK COMMISSION, the bidder shall file with the RECREATION AND PARK COMMISSION Surety bonds satisfactory to the RECREATION AND PARK COMMISSION in the amounts and for purposes noted below. Bonds shall be duly executed by a responsible corporate Surety, authorized to issue such bonds in the State of California and secured through an authorized agent with an office in California. Bonds shall be issued by a Surety who is listed in the latest revision of U.S. Department of Treasury Circular 570, is authorized to issue bonds in California, and whose bonding limitation shown in said circular is sufficient to provide bonds in the amount required by the Contract. The Bidder shall pay all bond premiums, costs, and incidentals. On Contracts estimated by the PROJECT MANAGER to be less than $2 million, bonds may be obtained from an insurance company with a Certificate of Authority from the California Insurance Commissioner authorizing the company to write Surety insurance within the State of California.

Each bond shall be signed by both the Bidder and the Surety, and the signature of the authorized agent of the Surety shall be notarized.

The Bidder shall provide two good and sufficient surety bonds. The "Payment Bond" (Material and Labor Bond) shall be for not less than one hundred percent (100%) of the Contract price, to satisfy claims of material suppliers and of mechanics and laborers employed by it on the Work. The bond shall be maintained by the CONTRACTOR in full force and effect until the Work is accepted by the RECREATION

AND PARK COMMISSION, and until all claims for materials and labor are paid, and shall otherwise comply with the California Civil Code.

The "Performance Bond" shall be for one hundred percent (100%) of the Contract price to guaranty faithful performance of all Work, within the time period prescribed, in a manner satisfactory to the RECREATION AND PARK COMMISSION, and that all materials and Workmanship will be free from original or developed defects, and comply with requirements and guaranty specified in Article 16, GUARANTY-WARRANTY of the General Requirements.

Should any Surety at any time be unsatisfactory to the RECREATION AND PARK COMMISSION, notice will be given the CONTRACTOR to that effect. No further payments shall be deemed due or will be made under the contract until a new Surety shall qualify and be accepted by the RECREATION AND PARK COMMISSION.

Changes in the Work, or extensions of time, made pursuant to the Contract, shall in no way release the CONTRACTOR or Surety from its obligations. Notice of such changes or extensions shall be waived by the Surety. In addition to the bonds detailed above, the CONTRACTOR shall provide a guarantee bond as detailed in Article 16, GUARANTY-WARRANTY of the General Requirements.

38. SERVICE OF NOTICE

The delivering of any notice, instruction, claim or protest, or other written communication, personally to the CONTRACTOR or the CONTRACTOR'S representative or to the PROJECT MANAGER, or to the City Clerk of the CITY shall constitute service therefore upon the CONTRACTOR, the PROJECT MANAGER, or the CITY, respectively.

The depositing of a post-paid (Registered Mail) wrapper directed to the official address of the CONTRACTOR, the PROJECT MANAGER, or the CITY in any post office, of any notice, instruction, claim or protest, or written communication, shall be deemed sufficient service thereof upon the CONTRACTOR, the PROJECT MANAGER, or the CITY, respectively, and the date of said service shall be the day following the date of postmark.

The official address of the CONTRACTOR shall be the address given in the accepted bid or such other address as the CONTRACTOR may subsequently designate in writing either to the PROJECT MANAGER or to the CITY. The official name and address of the PROJECT MANAGER and the CITY will be supplied to the CONTRACTOR after the award.

39. AGENT TO ACCEPT SERVICE

The CONTRACTOR shall maintain within Los Angeles County a duly authorized agent as identified in the Article entitled SERVICE OF NOTICE to accept service of legal process on its behalf, and shall keep the CITY advised of such agent's name and address during the duration of the CONTRACT and for three (3) years after the Final Payment, or as long as the CONTRACTOR has warranty obligations under Article 16, GUARANTY-WARRANTY of General Requirements, whichever period terminates later. In the event that no such duly authorized agent is on file with the CITY, the CONTRACTOR agrees that the Secretary of State of the State of California shall be the Contractor's agent for service of legal process.

PROGRESS OF WORK

40. TEMPORARY SUSPENSION OF WORK

If the Work of the Contract is suspended or delayed, the CONTRACTOR shall so notify the PROJECT MANAGER in writing within twenty-four (24) hours after the start thereof. If the CONTRACTOR is entitled to reimbursement for such suspension or delay, as specified hereinafter, the CONTRACTOR shall submit a completely detailed statement of the costs thereof, to the PROJECT MANAGER, within twenty (20) calendar days after the termination thereof. Failure to submit such statement of costs or notification within the time specified shall be deemed a waiver of any claims for delay or damages or both by the CONTRACTOR.

If the Work of the Contract is suspended or delayed through no fault of the CITY, all expenses and losses shall be borne by the CONTRACTOR.

If the Work of the Contract is suspended or delayed by an act of the CITY, or by failure of the CITY to furnish required information, and the CONTRACTOR thereby incurs expenses or sustains losses which could not have been avoided by the judicious handling of forces and equipment, and if by a diligent prosecution of the Work the CONTRACTOR could not have completed the Work before such suspension, the CONTRACTOR will be paid such amount as the RECREATION AND PARK COMMISSION may find to be a fair and reasonable compensation for such part of the CONTRACTOR'S actual loss. In no case shall any compensation be made to cover any loss other than actual cash paid for wages, rental of equipment, and materials used in protection of the Work, all of which must be supported by satisfactory written evidence. Such wages shall not include the wages or salary of any individual not necessary for protection of the Work. The CONTRACTOR shall not be entitled to any mark-up for overhead or profit on damages or for extended duration.

The CONTRACTOR shall maintain complete and accurate daily records of all costs due to delay, clearly distinguishing them from the costs of other portions of the Work, and shall submit a detailed written report of such costs to the PROJECT MANAGER within twenty (20) calendar days of incurring the delay. Failure to comply shall result in waiver by the CONTRACTOR to any claims for additional payment and schedule change. In addition, the CONTRACTOR shall submit evidence of any cause of delay specified herein if it has not already done so.

As soon as practicable, following receipt of such report and evidence, if required, the PROJECT MANAGER will determine the nature and extent of such costs and will, if the PROJECT MANAGER finds that payment is due, issue a Change Order therefore, subject to the provisions in Article 27, PAYMENT FOR CHANGES AND EXTRA WORK of the General Requirements. If the PROJECT MANAGER determines that payment is not due, the CONTRACTOR will be so advised in writing. Should the CONTRACTOR disagree with such finding, CONTRACTOR may submit a notice of protest to the PROJECT MANAGER as provided in CLAIMS AND PROTESTS in these General Conditions. The CONTRACTOR shall provide the PROJECT MANAGER with access to its daily cost records or certified copies thereof as requested. All such records shall be retained by the CONTRACTOR and open to inspection and audit by the CITY and the PROJECT MANAGER'S authorized representatives. Except for the additional compensation provided herein before, the CONTRACTOR shall have no claim for damage or compensation for any delay or hindrance whether or not contemplated by the Contract.

41. UNAVOIDABLE DELAY

Should the CONTRACTOR be obstructed or delayed or completion of the Work from causes beyond its control and without its fault or negligence, and solely due to acts of God, acts of government in its sovereign capacity, riots, insurrections, wars, fires, floods, earthquakes, tidal waves, epidemics, quarantine restrictions, industry-wide strikes, freight embargoes, or unusually severe weather, it shall be entitled to a noncompensable extension of time.

The CONTRACTOR shall only be entitled to a noncompensable extension of time for Unavoidable delay in the Work which negatively impacts the critical path of the approved project schedule, and causes the Work of the project to extend beyond the approved Contract Completion date.

The CONTRACTOR shall be entitled to a noncompensable time extension only if it notifies the PROJECT MANAGER immediately at the time the CONTRACTOR is prevented from proceeding with the Work and follows with written notification of the causes of the delay within five (5) calendar days from the beginning of any delay. Also, the CONTRACTOR shall notify the PROJECT MANAGER immediately at the end of the delay and follow up with written notification of the cessation of delay within five (5) calendar days from the end of the delay.

Any claim for a time extension shall be made in writing within twenty (20) calendar days after the conclusion of the delay. The PROJECT MANAGER shall ascertain the facts and the extent of the delay and extend the time for completing the Work if, in his/her judgement, the findings of fact justify such an extension. The PROJECT MANAGER'S decision shall be final and conclusive, subject only to appeal as provided by CLAIMS AND PROTESTS of these General Conditions.

42. ARCHAEOLOGICAL AND PALEONTOLOGICAL DISCOVERIES

If discovery is made of items of archaeological or paleontological interest, the CONTRACTOR shall immediately cease excavation in the area of discovery and shall not continue until ordered by the PROJECT MANAGER.

When resumed, excavation operations within the area of discovery shall be as directed by the PROJECT MANAGER.

Discoveries which may be encountered may include, but not be limited to, dwelling sites, stone implements or other artifacts, animal bones, human bones and fossils. The CONTRACTOR shall be entitled to an extension of time and compensation in accordance with the provision of TEMPORARY SUSPENSION OF WORK of these General Conditions.

43. OTHER CONTRACTS

The CITY may perform other Work related to the Project at the site by the CITY'S own forces, have other Work performed by utility owners or let other direct contracts therefore which shall contain General Conditions similar to these. If such other Work to be performed was not noted in the Contract Documents, written notice thereof will be given to the CONTRACTOR prior to starting any such other Work; and, if the CONTRACTOR believes that such performance will involve additional expense to the CONTRACTOR or requires additional time and the parties are unable to agree as the extent thereof, the CONTRACTOR may make a claim therefore as provided under CLAIMS AND PROTESTS of these General Conditions.

The CONTRACTOR shall afford each utility owner and other contractor who is a party to such a direct contract (or the CITY, if the CITY is performing the additional Work with the CITY'S employees) proper and safe access to the site and a reasonable opportunity for the introduction and storage of materials and equipment and the execution of such Work, and shall properly connect and coordinate the Work with theirs. The CONTRACTOR shall do all cutting, fitting and patching of the Work that may be required to make its several parts come together properly and integrate with such other Work. The CONTRACTOR shall not endanger any Work of others by cutting, excavating or otherwise altering their Work and will only cut or alter their Work with the written consent of the PROJECT MANAGER and the others whose Work will be affected. The duties and responsibilities of the CONTRACTOR under this Article are for the benefit of such utility owners and other contractors to the extent that there are comparable provisions for the benefit of the CONTRACTOR in said direct contracts between the CITY and such utility owners and other contractors.

If any part of the CONTRACTOR'S Work depends upon proper execution or results of the Work of any such other contractor or utility owner or the CITY, the CONTRACTOR shall inspect and promptly report to the PROJECT MANAGER in writing any delays, defects or deficiencies in such Work that renders it unavailable or unsuitable for such proper execution and results. The CONTRACTOR'S failure to do so will constitute an acceptance of the other Work as fit and proper for integration with the CONTRACTOR'S Work except for latent or nonapparent defects and deficiencies in the other Work.

44. TERMINATION OF CONTRACT BY CITY (CONTRACTOR NOT AT FAULT)

The CONTRACT may be terminated, in whole or in part, at any time, by the CITY, at its sole discretion, without cause and for the CITY'S convenience. Such termination will be accomplished by delivery of a notice of Termination to the CONTRACTOR, specifying the extent to which performance of the Work under the CONTRACT or portion of the CONTRACT shall be terminated and the date upon which such termination shall become effective.

After receipt of a Notice of Termination, except as otherwise directed by the CITY the CONTRACTOR shall:

1. Stop Work under the CONTRACT on the date and to the extent specified in the Notice of Termination.
2. Notify the CITY in writing of all outstanding orders, Subcontracts and contracts entered into by CONTRACTOR for performance of the Work, including the (i) name and address of the vendor, supplier or Subcontractor; (ii) a copy of the complete contract, order or Subcontract; (iii) an accounting of the Work performed and compensation earned by the vendor, supplier or Subcontractor, and (iv) such other information as the CITY may request to assist it in determining whether to terminate or accept assignment of the order, Subcontract or contract.
3. Upon written notice by CITY, terminate all Subcontracts, orders and contracts, of any tier, related to the performance of the Work that the CITY determines shall be terminated and not assigned.

4. Place no further orders or Subcontracts for Goods or services, except as may be necessary for completion of that portion of the Work that has not been terminated.

5. Settle outstanding liabilities and claims arising out of such termination of orders and Subcontracts, with the Acceptance of the CITY if required (which Acceptance shall be final for the purposes of this Article). Assign to the CITY in the manner, at the times, and to the extent directed by the CITY all of the rights, titles, and interests of the CONTRACTOR under such orders, contracts and Subcontracts so terminated.

6. Transfer title and deliver to the CITY in the manner, at the times and to the extent directed by it, the:

    a. Fabricated or unfabricated parts, Work in process, completed Work, supplies, and other Goods procured as a part of, or acquired in connection with the performance of the Work terminated; and

    b. Completed or partially completed plans, drawings, information and other items that would have been required (per the Technical Specifications) to be furnished to the CITY if the Contract had been completed.

7. Use its best efforts to sell the property of the types referred to above in the manner, at the times, to the extent, and at the price(s) directed or authorized by the CITY, providing that the:

    a. CONTRACTOR is not required to extend credit to any purchaser;

    b. CONTRACTOR may acquire any such property under the prescribed conditions; and/or proceeds of any such transfer or disposition are applied or otherwise credited to reduce payments made by the CITY to the CONTRACTOR under the CONTRACT.

8. Take any action that may be necessary, or that the CITY may direct, for the protection and preservation of the property related to the CONTRACT that is in the possession of the CONTRACTOR and in which the CITY has or may acquire an interest.

9. Complete performance of that portion of the Work that has not been terminated by the Notice of Termination, as applicable and in accordance with the CONTRACT.

After receipt of a Notice of Termination for the CITY's convenience, the CONTRACTOR shall submit its termination claim to the CITY requesting payment of such sums as are permitted under the terms of this Article, in the form and with the certification(s) prescribed by the CITY for Claims and Protests. Such Claim shall be submitted promptly but in no event later than six months from the effective date of termination, unless one or more extensions are granted in writing by the CITY upon written request by the CONTRACTOR during such six month period or authorized extension thereof. However, the CITY may receive and act upon any termination claim at any time after the six month period or any extension thereof, if it determines that the facts justify such action. Upon failure of the CONTRACTOR to submit its termination claim within the time specified, the CITY will determine the amount due the Contractor, if any, on the basis of information available, and will pay the CONTRACTOR the amount so determined. Such determination shall be final and binding and payment shall be in full settlement for the Work performed under the CONTRACT.

Subject to the provisions of this Article, the CONTRACTOR and the CITY may agree upon the total or partial amount to be paid to the CONTRACTOR by reason of the total of or partial termination pursuant to this Article. The agreed upon amount shall under no circumstances include any sum for lost profits on the terminated portion of the Work or for consequential damages, of any kind. If agreement is reached, the CONTRACT will be amended by Modification accordingly and the CONTRACTOR will be paid the agreed upon amount.

In the event of failure of the CONTRACTOR and the CITY to agree on the total amount to be paid the CONTRACTOR by reason of the termination of Work pursuant to this Article, the CITY will pay the CONTRACTOR the amounts determined by the City as follows, exclusive of any amounts agreed upon in accordance with the preceding Paragraph:

The CONTRACTOR'S actual cost for the Work properly performed by the CONTRACTOR as of the date of termination, including a 5% allowance for profit on such costs; plus, the reasonable cost of preserving and

protecting property; plus other reasonable costs incidental to the termination of the Work under the CONTRACT, including expense incurred to determine the amounts due; provided however, that the maximum payable or paid for any portion of the completed Work shall not exceed the values listed in the corresponding bid item of Schedule of Values.

The total sum to be payable or paid to the CONTRACTOR, exclusive of the settlement amounts described in the Paragraph immediately above, shall not exceed the total CONTRACT Price less the:

1. Payments made previously by CITY for the Work; plus
2. A prorated portion of the total CONTRACT Price for the terminated portion of the Work as determined by the PROJECT MANAGER.

Except for normal spoilage and to the extent that the CITY will have otherwise expressly assumed the risk of loss, the fair value (as determined by the CITY) of property that is destroyed, lost, stolen, or damaged (so as to become undeliverable to the CITY or other buyer as described above) shall be excluded from the amounts paid to the CONTRACTOR.

In arriving at the amount due the CONTRACTOR under this Article, a deduction shall be made for the following:

1. Any claim that the CITY may have against the CONTRACTOR in connection with the CONTRACT; and
2. The agreed upon price for and/or proceeds from the sale of Goods or other items acquired or sold by the CONTRACTOR that have not been otherwise recovered by or credited to the CITY.

Under such terms and conditions as it may prescribe and at its sole discretion, the CITY may make partial payments against costs incurred by the CONTRACTOR in connection with terminated portion of the CONTRACT whenever the CITY decides that the aggregate of such payments is within the amount to which the CONTRACTOR is entitled hereunder. If the total of such payments is in excess of the amount finally agreed upon or determined to be due under this Article, such excess shall be payable by the CONTRACTOR or to the CITY upon demand together with interest at a rate equal to that set forth in California Code of Civil Procedure, Section 685.010.

Under no circumstances shall the CONTRACTOR be entitled to anticipatory or unearned profits or consequential damages as a result of a termination of partial termination under this Article, or for any other termination by the CITY. The payment to the Contractor determined in accordance with this Article shall constitute the exclusive remedy of the CONTRACTOR for termination hereunder.

Anything contained in the CONTRACT to the contrary notwithstanding, a termination under this Article shall not waive any right or claim to damages that the CITY may have; the CITY may pursue any clause of action that it may have by law or under the CONTRACT; and shall not relieve CONTRACTOR of its warranty obligations with respect to any Work performed prior to such termination.

If the termination hereunder is only for a part of the Work, the Contract Price shall be reduced by the amount of the Contract Price applicable to the portion of the Work, which is terminated, including overhead and profit, on the basis of one or more of the following:

1. Unit prices stated in the CONTRACT or agreed upon by the CITY and the CONTRACTOR.
2. A lump sum determined by the PROJECT MANAGER, based on the estimate costs including overhead and profit of the terminated portions of the Work.

45. TERMINATION OF CONTRACT BY CITY (CONTRACTOR DEFAULT)

In the event of conduct by the CONTRACTOR which is determined by the PROJECT MANAGER or the to constitute default, the CITY may either suspend the Work under the provisions of TEMPORARY SUSPENSION OF WORK of these General Conditions or, upon ten (10) calendar days' written notice to the CONTRACTOR, terminate the Contract as provided herein. Default by the CONTRACTOR shall occur whenever it shall declare bankruptcy; become insolvent or assign its assets for the benefit of its creditors; fail to provide materials, equipment, or workmanship meeting the requirements of the Specifications; disregard or violate provisions of the

Contract Documents or the PROJECT MANAGER's instructions; fail to prosecute the Work according to the approved progress schedule; or fail to provide a qualified representative, competent workers or Subcontractors. Upon request, the RECREATION AND PARK COMMISSION will provide the CONTRACTOR a hearing by the RECREATION AND PARK COMMISSION to contest the recommendation of the PROJECT MANAGER as to default by the CONTRACTOR.

In the event the Contract is terminated pursuant to this Article, the CITY may take possession of the Work and of all materials, tools, equipment, and property of the CONTRACTOR, which have been provided in connection with the Work, and may complete the Work by whatever method or means the CITY may select. The unpaid balance of the Contract cost for completing the Contract Work shall be used to complete the Work in accordance with the Contract Documents. If cost of completing the Work exceeds the unpaid balance, the CONTRACTOR shall pay the excess amount to the CITY. If such cost is less than the unpaid balance, the CONTRACTOR shall not have claim to the difference except to such extent as may be necessary, in the opinion of the PROJECT MANAGER, to reimburse the CONTRACTOR or the CONTRACTOR'S sureties for any unpaid expense properly incurred for materials, tools, equipment, property, and labor devoted to the prosecution of the Work, or which the CITY shall have received the benefit. In computing such expenses, as it relates to equipment and property, the salvage value at completion of Work shall be deducted from the salvage value at the time the contract was terminated, and the difference shall be considered as an expense. If after termination for failure of the CONTRACTOR to fulfill contractual obligations (CONTRACTOR Default), it is determined by a Court of competent jurisdiction that the CONTRACTOR had not failed to fulfill contractual obligations, the termination shall be deemed to have been for the convenience of the CITY. In such an event, adjustment of the Contract price shall be made as provided in TERMINATION OF CONTRACT BY CITY (CONTRACTOR NOT AT FAULT) of these General Conditions.

46. PRE-FINAL INSPECTION

Approximately two weeks before completion of the Work, the contractor will schedule a Pre-final Inspection to be attended by the Bureau of Contract Administration Inspector, the Project Manager, the Contractor and invited parties associated with the Project. At this time, a list of items requiring correction or completion before the Final Inspection will be compiled. In addition, at this time the Contractor shall arrange for the delivery of manufacturers' data, manuals, and operating instructions and keys to the appropriate Department of Recreation and Parks personnel.

47. FINAL INSPECTION

Approximately seven (7) days prior to completion of the Work, the Contractor shall first notify the Bureau of Contract Administration Inspector and then the Project Manager that he desires a Final Inspection of the Project. During this inspection, which will be arranged as soon as possible, the Inspector, the Project Manager, the Contractor and other parties concerned with contractual requirements will compile a Final Inspection Correction List, incorporating all items of work and corrections required to complete the Project. This list must be completed within thirty (30) days of Final Inspection, or a new Final Inspection will be held and a new Final Inspection Correction List compiled.

48. PARTIAL ACCEPTANCE

The CITY shall have the right to utilize or place into service any item of equipment or other usable portion of the Work prior to completion of the entire project. Whenever the CITY plans to exercise said right, the CONTRACTOR will be notified in writing by the CITY, identifying the specific portion or portions of the Work to be so utilized or otherwise placed into service. Following inspection by the Bureau of Contract Administration's Final Inspector and establishment of a Final Inspection Correction List, a Statement of Partial Completion will be issued.

It shall be understood by the CONTRACTOR that until a Statement of Partial Completion is issued, all responsibility for care and maintenance of all items or portions of the Work to be placed in use shall be borne by the CONTRACTOR. Upon issuance of a Statement of Partial Completion, the CITY will accept responsibility for the protection and maintenance of all such items or portions of the Work described in the written notice, and it is further understood that the manufacturer's warranties of any affected equipment will commence not later than the date for commencement of the warranties indicated on the Statement of Partial Completion. However, the CONTRACTOR shall retain full responsibility for satisfactory operation of the total project and the CONTRACTOR'S guarantee period shall commence only after the final acceptance of the Contract by the

RECREATION AND PARK COMMISSION. Such guarantee of total systems operation shall include that portion or portions previously placed into beneficial use by the CITY.

The issuance of a Statement of Partial Completion for any part of the Work shall not relieve the CONTRACTOR of its obligation to promptly remedy any omissions and latent or unnoticed defects in the Work covered by the Statement of Partial Completion. The CITY shall have the right to restrict the CONTRACTOR'S use of the occupied portion of the Work but shall allow the CONTRACTOR reasonable access to complete or correct items required by the Contract Documents.

The CITY may, if the Work is progressing satisfactorily, release part of the retention on portions of the Work for which a Statement of Partial Completion has been issued, provided that the following conditions have been met:

1. Partial final inspection corrections have been completed to the satisfaction of the INSPECTOR;
2. The CONTRACTOR submits a written request for release of retention which includes a verifiable valuation of the identified portions of the Work covered by the Statement of Partial Completion;
3. Impacted Subcontractors, major suppliers and the CONTRACTOR's Surety all agree in writing to release of retention;
4. If any minor corrections remain which do not directly affect operations or maintenance then twice the values of the remaining cleanup items shall be retained on each request for release; and
5. The CONTRACTOR signs a Change Order which specifically states the value of the retention being released.

The PROJECT MANAGER shall issue a no-change-in-contract-cost Change Order reflecting the Work for which a Statement of Partial Completion has been issued and the amount of the retention to be released. This Change Order shall authorize reduction of the retention on the next payment.

49. FINAL ACCEPTANCE

When all Work has been completed on the entire project, the CONTRACTOR shall notify the INSPECTOR and the PROJECT MANAGER in writing and request a final inspection by the INSPECTOR. The inspection conducted by the Final Inspector will include the CONTRACTOR and major Subcontractors' representatives. The CONTRACTOR shall promptly and diligently correct all items on the Final Inspection Correction List. The correction list Work will be reinspected until all Work is complete. If deemed necessary by the PROJECT MANAGER, a deductive Change Order may be issued for twice the value of final correction list items remaining to be corrected to attain completion, and permit the acceptance of the Contract by the RECREATION AND PARK COMMISSION.

Final payment to the CONTRACTOR is made following action by the RECREATION AND PARK COMMISSION that formally adopts the recommendation of the PROJECT MANAGER to accept the Contract. Said action by the RECREATION AND PARK COMMISSION establishes the following:

1. The start date of the CONTRACTOR'S material and workmanship warranty/guarantee for the total project.
2. The start date of any equipment or material warranties for which the "warranty clock" had not started.

50. LIQUIDATED DAMAGES

Time is of the essence in completing the Work required by the Contract. If the CONTRACTOR fails or refuses to complete the Work or any part thereof within the time fixed by the terms of the Contract, or any approved extension thereof, the actual damage to the CITY due to the delay will be difficult or impossible to determine. In lieu thereof, the CONTRACTOR shall pay to the CITY, as fixed and agreed, liquidated damages for each calendar day of delay in completion, the sum of **$2,400.00 per day**. The CONTRACTOR shall be liable for the amount thereof. The CITY reserves the right, however, to terminate the CONTRACTOR's completing the Work, charging against the CONTRACTOR and its sureties any excess cost occasioned the CITY thereby, together with liquidated damages accruing until such time as the CITY may reasonably complete the Work.

Permitting the CONTRACTOR to continue and complete the Work, or any portion thereof, after the time fixed herein for completion, or after the expiration of any extensions of said time, shall in no way operate as a waiver on the part of the CITY of any of its rights under the Contract.

51. COMPENSATION FOR DELAY, DISRUPTION, AND UNANTICIPATED OVERHEAD

Notwithstanding anything to the contrary in the Contract Documents, CONTRACTOR agrees the provisions of this Article, set forth CONTRACTOR'S sole and exclusive rights to compensation for costs, expenses or damages, of any kind, arising from or relating to (i) delay, disruption, hindrance, interference, schedule compression, and the impact, ripple or cumulative effect thereof; or (ii) additional supervision, administration, excess, extended or extraordinary overhead, loss of productivity, or similar costs, expenses or damages incurred as a result of or related to extras, changes, additions or deletions in the Work, errors, omissions, conflicts or ambiguities in the Contract Documents, suspensions of the Work, acts or omissions of CITY or its representatives, agents, contractors or consultants, Differing Site Conditions, or other unforeseen circumstances, of any kind.

CONTRACTOR shall not be entitled to, and hereby conclusively waives, any right to recovery of compensation, costs, expenses or damages for delays, disruptions, hindrances or interferences (including without limitation interruption of schedules, extended, excess or extraordinary field and indirect overhead costs, loss of productivity and the impact, ripple or cumulative effect on other Work) that are the result of Unavoidable Delays or which are caused by the acts or omissions of CONTRACTOR or of its SUBCONTRACTORS, of any tier.

CONTRACTOR'S rights to recovery of compensation, costs, expenses and damages for delay, disruption, hindrance and interference (including without limitation interruption of schedules, extended, excess and extraordinary field and indirect overhead costs, loss of productivity and the impact, ripple or cumulative effect on other Work) that are the result of extras, changes, additions or deletions in the Work for which CONTRACTOR is entitled to an adjustment of the Contract Price as set forth in CHANGES AND EXTRA WORK of these General Conditions and shall constitute the sole, exclusive and complete compensation that the CITY is obligated to pay CONTRACTOR for all such costs, expenses and damages incurred by CONTRACTOR and its SUBCONTRACTORS, of every tier.

Time extension in calendar days will be granted only if delays are caused by unforeseen events beyond the control of both the CONTRACTOR and the City. Such delays will entitle the CONTRACTOR to an extension of time as provided herein, but the CONTRACTOR shall not be entitled to damages or additional payment due to such delays. War, government regulations, labor disputes, strikes (when not brought solely against the CONTRACTOR, its subcontractors or material suppliers), fires, floods, adverse weather necessitating cessation of work, other similar action of the elements, inability to obtain materials, equipment or labor, required "extra work", or other specific reasons as may be further described in the specifications may constitute such a delay.

No extension of time will be granted for a delay caused by the inability to obtain materials unless the CONTRACTOR furnishes to the Project Manager documentary proof of the inability to obtain such materials in a timely manner in accordance with the sequence of the CONTRACTOR'S operations and the approved construction schedule.

The amount of time given to the CONTRACTOR is limited to the amount of time the Project is directly impacted by the above described delays. Direct impact means no other project work can proceed.

The CONTRACTOR may be compensated for delays caused solely by the failure of the City to furnish necessary rights-of-way, failure to deliver materials shown in the CONTRACTOR Documents to be furnished by the City, or for the suspension of the work by the City for its own convenience or benefit. If compensable delays could not have been avoided by the judicious handling of forces, equipment or plant, there shall be paid to the CONTRACTOR such amount as the General Manager may find to be fair and reasonable compensation for such part of the CONTRACTOR'S actual loss as was unavoidable.

If the CONTRACTOR desires payment for a delay as specified above or an extension of time, it shall, within thirty (30) days after the beginning of the delay, file with the General Manager a written request and report as to the cause and extent of the delay. The request of payment or extension must be made at least fifteen (15) days before the specified completion date, so as to allow for appropriate investigation. Failure by the CONTRACTOR to

file these items within the times specified will be considered grounds for refusal by the City to consider such a request.

Any and all extensions of time granted under the Provisions of these Specifications shall not release the sureties on the bonds accompanying the Contract for the work required herein. The bonds shall remain in full force and effect until the discharge of the Contract.

CHANGES TO THE CONTRACT

52. CHANGES AND EXTRA WORK

The PROJECT MANAGER may, at any time, with or without notice to the Sureties, by written order designated or indicated to be a Change Order, order performance of extra work or make any change, addition or deletion in the Work, including but not limited to changes in the Specifications including Plans and Designs; in the time, method or manner of performance of the Work; in the CITY furnished facilities, equipment, materials, services, or site; or directing acceleration in the performance of the Work.

Upon receipt of such Change Order, the CONTRACTOR shall promptly proceed with the Work covered thereby, which shall be performed in accordance with the provisions of the Contract Documents except as otherwise specifically provided.

In the event that CONTRACTOR receives any written order or direction by the CITY, PROJECT MANAGER that is not so designated or indicated to be a Change Order, but which CONTRACTOR believes to constitute an extra, change, addition or deletion in the Work, then CONTRACTOR shall, prior to performance of any Work related thereto, give written confirmation notice to the PROJECT MANAGER confirming CONTRACTOR'S belief that such order or direction is believed to be a Change Order within one (1) working day of CONTRACTOR'S receipt of such order or direction.

CONTRACTOR conclusively waives any right to additional compensation, costs, expenses, damages or extension of time associated with an extra, change, addition or deletion to the Work that is performed by CONTRACTOR without either (i) a written order signed by the CITY, PROJECT MANAGER designated or indicated to be a Change Order and any change, addition or deletion, or (ii) a written confirmation notice issued by CONTRACTOR in accordance with the provisions of this Article.

Should a change be required and it is not feasible to delay construction of that portion of the Work until such time as a regular Change Order can be issued, and the estimated increase in Contract cost does not exceed the amount which can be authorized by the PROJECT MANAGER, an Emergency Change Authorization, in writing, will be issued in the field by the PROJECT MANAGER, and the CONTRACTOR shall then proceed with the Work without delay. Such Emergency Change Authorization shall be followed by a subsequent regular Change Order.

Except as provided in this Article, no order, Statement, or conduct of the PROJECT MANAGER shall be treated as a change under this Article or shall entitle the CONTRACTOR to an adjustment in the Contract Price or Contract Completion Date.

If any change under this Article causes an increase or decrease in the CONTRACTOR'S cost or the time required to perform any part of the Work under this Contract, whether or not said costs or time are specified by any order, the PROJECT MANAGER will make an adjustment to the Contract Price and modify the Contract in writing. Except for claims based on defective Specifications, no claim for any change under this Article shall be allowed for any costs incurred more than twenty (20) calendar days before the CONTRACTOR gives written notice as required. Except as otherwise provided in the Contract Documents, in the case of defective specifications for which the PROJECT MANAGER is responsible, the adjustment shall include any increased cost the CONTRACTOR reasonably incurred in attempting to comply with those defective specifications.

If the CONTRACTOR intends to assert a claim for an adjustment in the Contract Price under this Article, it must, within twenty (20) calendar days after receipt of a written Change Order or the furnishing of a written confirmation notice as hereinbefore specified, submit a written statement to the PROJECT MANAGER setting forth the general nature and monetary extent of such claim and all factual grounds therefor. The CONTRACTOR may include the statement of claim in the written notice as hereinbefore specified. Failure to comply with the twenty (20) calendar day notice requirement shall be deemed a waiver of claims by the CONTRACTOR.

No adjustment shall be made under this Article for any suspension, delay, interruption, change or any other cause, to the extent that an adjustment is provided for or excluded under any other provision of the Contract.

Recovery of compensation, costs, expenses or damages resulting from delay, disruption, hindrance, or interference in the performance of the Work (including without limitation interruption of schedules, extended, excess or extraordinary field overhead and indirect overhead costs, loss of productivity and the impact, ripple or cumulative effect on other Work), shall not be permitted, and all rights thereto are conclusively waived by CONTRACTOR, except to the extent allowed by COMPENSATION FOR DELAY, DISRUPTION AND UNANTICIPATE OVERHEAD of these General Conditions.

No claim by the CONTRACTOR shall be allowed if the claim is made after final payment under this Contract.

53. DIFFERING SITE CONDITIONS

The following provisions shall apply only in the event that there is not a Geotechnical Baseline Report for the Project. If a Geotechnical Baseline Report is so identified, then the provisions of this Article shall not apply and the CONTRACTOR'S rights arising from Differing Site Conditions shall be governed solely by the provisions of the General Requirements pertaining to the CONTRACTOR'S rights in the event of Differing Site Conditions.

Upon discovery and before further disturbance of any unforeseen conditions, the CONTRACTOR shall immediately notify the INSPECTOR and the PROJECT MANAGER, followed by a written notice to the PROJECT MANAGER within twenty-four (24) hours of subsurface or latent physical conditions at the site differing materially from those indicated in the Contract Documents; or unknown physical conditions at the site, of an unusual nature, differing materially from those ordinarily encountered and generally recognized as inherent in the Work of the character provided for in this Contract; or materially differing from that represented in the Contract Documents which the CONTRACTOR believes may be hazardous waste, as defined in the California Health and Safety Code, that is required to be removed to a Class I, Class II or Class III disposal site in accordance with provisions of existing law.

The PROJECT MANAGER shall promptly investigate the conditions. If the PROJECT MANAGER finds that conditions materially differ and will cause an increase or decrease in the CONTRACTOR'S cost or the time required to perform any part of the Work under this contract, whether or not changed as a result of such conditions, the PROJECT MANAGER shall, make an adjustment in the Contract Price by Modification to the Contract in writing.

If the CONTRACTOR intends to seek an adjustment to the Contract Price or Contract Completion Date based upon this Article, it must, within twenty (20) calendar days after it first discovered or should have discovered in the exercise diligence and extreme care the existence of Differing Site Conditions, submit a written statement setting forth a detailed cost breakdown in the form required by Article 27, PAYMENT FOR CHANGES AND EXTRA WORK of the General Requirements, setting forth the basis of CONTRACTOR'S calculation of the costs saved or, detailed information demonstrating the effect on the CONTRACTOR'S schedule of performance in the same manner as required by the Contract Documents for obtaining approval of extensions of time, identification of the Escrow Bid Documents that formed the basis of the CONTRACTOR'S bid estimate to perform the Work affected by such conditions, and a complete and detailed explanation of the factual basis for the request.

Failure by CONTRACTOR to strictly comply with the requirements of this Article concerning the timing and content of any notice of Differing Site Conditions or of any request for adjustment in Contract Price or Contract Completion Date based on Differing Site Conditions shall be deemed waiver of any claim by the CONTRACTOR for increase in the Contract Price or extension of the Contract Completion Date by reason of such conditions.

CONTRACTOR'S right to compensation for (i) delay, disruption, hindrance, interference, schedule compression, and the impact, ripple or cumulative effect thereof; or (ii) additional supervision, administration, excess, extended or extraordinary overhead, loss of productivity, or similar costs, expenses or damages incurred as a result of or related to any Claim based on Differing Site Conditions shall be limited to such sums as are allowable under COMPENSATION FOR DELAY, DISRUPTION, AND UNANTICIPATED OVERHEAD of these General Conditions.

No claim by the CONTRACTOR for an adjustment hereunder be allowed if asserted after final payment under this Contract.

LEGAL REQUIREMENTS

54. CLAIMS AND PROTESTS

A Claim or Protest that involves an extra, change, addition or deletion to the Work as set forth in CHANGES AND EXTRA WORK of these General Conditions shall arise upon issuance of a final decision of the PROJECT MANAGER denying, in whole or in part, a request for adjustment in the Contract Price or Contract Completion Date; provided however, that failure to comply with the requirements of CHANGES AND EXTRA WORK of these General Conditions shall be conclusively deemed to constitute grounds to deny such Claim or Protest.

A Claim or Protest that does not involve an extra, change, addition or deletion to the may be asserted only if the CONTRACTOR shall immediately and prior to performing the Work affected thereby give written notice to the PROJECT MANAGER of such circumstances and of CONTRACTOR'S intention to file a Claim or Protest based thereon. Unless otherwise directed by the PROJECT MANAGER the CONTRACTOR shall proceed without delay to perform the Work and to conform to any order, instruction, or decision of the PROJECT MANAGER with respect thereto.

The CONTRACTOR shall, within twenty (20) calendar days after it first knew, or in the exercise of diligence and extreme care should have known, of the circumstances giving rise to the Claim or Protest, file a written Claim or Protest with the PROJECT MANAGER, stating in detail all objections, grounds and reasons therefore. The CONTRACTOR shall, upon instruction by the PROJECT MANAGER provide, within ten (10) days or such other time as agreed to between the PROJECT MANAGER, the INSPECTOR, and the CONTRACTOR, any and all documents, records or other materials identified by the PROJECT MANAGER as necessary for the resolution of the CONTRACTOR's Claim or Protest.

Claims or Protests seeking time extensions shall be accompanied by such documentation as is required by Article 18, CONTRACTOR'S CONSTRUCTION SCHEDULE AND REPORTS of the General Requirements. Claims or Protests seeking recovery of compensation or adjustments to the CONTRACT PRICE, whether or not based on extras, changes, additions or deletions to the Work, shall be in the form of Change Order Cost Quotations prepared in accordance with and subject to all of the requirements of Article 27, PAYMENT FOR CHANGES AND EXTRA WORK of the General Requirements, including without limitation the prohibition on use of total cost and modified total cost methodologies.

CONTRACTOR waives all rights to assert any claims or seek any relief in the form of extensions of time or recovery of additional compensation, costs, expenses, damages from the CITY that are not presented as a Claim or Protest in the manner specified and within the time stated herein. CONTRACTOR further hereby agrees that in the interest of avoiding the additional expense and potential inequity of piecemeal resolution of Claims or Protests, all decisions by PROJECT MANAGER shall be final and binding not only as to all matters asserted in the Claim or Protest, but also as to all matters (including without limitation all rights to extensions of time and recovery of extra compensation, costs, expenses and damages) not asserted in the Claim or Protest that were known to CONTRACTOR, or that could have been reasonably discovered by CONTRACTOR in the exercise of diligence and extreme care, at the time of submission of the Claim or Protest and that are in any way related to the subject matter of the Claim or Protest. All orders, instructions and decisions of the PROJECT MANAGER will be limited to matters properly falling within their respective authority as specified in AUTHORITY OF THE RECREATION AND PARK COMMISSION, PROJECT MANAGER AND INSPECTOR of these General Conditions.

The CONTRACTOR will be informed of the PROJECT MANAGER's decision within thirty (30) days after the CONTRACTOR last submits data pertinent to the protest previously mentioned. In the case of a Claim or Protest that involves an extra, change, addition or deletion to the Work as set forth in CHANGES AND EXTRA WORK of these General Conditions, if the Contractor accepts the decision of the PROJECT MANAGER, then the CONTRACTOR and CITY shall enter into a Change Order adjusting the Contract Price and Contract Completion Date in accordance with such decision. In the case of a Claim or Protest does not involve an extra, change, addition or deletion to the Work as set forth in CHANGES AND EXTRA WORK of these General Conditions and the CONTRACTOR accepts the decision of the PROJECT MANAGER, then the CONTRACTOR and CITY shall enter into a Modification of the Contract setting forth the terms of the decision and, if appropriate, its effect on the Contract Price or Contract Completion Date. If the CONTRACTOR does not accept the decision of the PROJECT

MANAGER, then further appeal of the PROJECT MANAGER's or the decision must be made to the RECREATION AND PARK COMMISSION in writing within twenty (20) calendar days after receipt of the PROJECT MANAGER's decision. The RECREATION AND PARK COMMISSION shall afford the CONTRACTOR an opportunity to be heard and to offer evidence in support of its appeal. All determinations of the RECREATION AND PARK COMMISSION with respect to Claims or Protests shall be final and binding.

In all matters concerning the validity, interpretation, performance, effect or otherwise of the Contract, the Federal regulations (if and to the extent expressly incorporated by reference in the Contract Documents), the laws of the State of California, and the Charter of the City of Los Angeles shall govern and be applicable. Pending final disposition of a protest, the CONTRACTOR shall proceed diligently with the performance of the Contract and in accordance with the previously mentioned decision.

Any Claim or Protest, including without limitation any Claim or Protest filed on behalf of or having its source in a claim by Subcontractor, Sub-Subcontractor, or Supplier, at any tier, which the CONTRACTOR chooses to make to the CITY, shall be accompanied by the certification language set forth below signed by a responsible managing officer of the CONTRACTOR'S organization, who has the authority to sign Subcontracts or Purchase Orders on behalf of the CONTRACTOR, and who has personally investigated and confirmed the truth and accuracy of the matters set forth in such certification. Submission of certification in accordance herewith is a condition precedent to the CITY's consideration of or decision on the Claim or Protest and to the filing and maintenance of any legal action or proceeding to enforce or recover monies under such Claim or Protest. Failure to submit such a certification along with the Claim or Protest, shall result in the Claim or Protest being returned to the CONTRACTOR without any decision and shall waive the CONTRACTOR's right to pursue the Claim or Protest either on its own behalf or on behalf of such Subcontractor or Supplier.

I hereby certify under penalty of perjury that I am a managing officer of (CONTRACTOR'S name) and that I have reviewed this Claim or Protest presented herewith on CONTRACTOR'S behalf and/or on behalf of (Subcontractor's/Supplier's name(s)) and that the following statements are true and correct:

1. The facts alleged in or that form the basis for the Claim or Protest are true and accurate; and,
2. CONTRACTOR does not know of any facts or circumstances, not alleged in the Claim or Protest, that by reason of their not being alleged render any fact or statement alleged in the Claim or Protest materially misleading; and,
3. CONTRACTOR has, with respect to any request for money or damages alleged in or that forms the basis for the Claim or Protest, reviewed the job cost records (including those maintained by CONTRACTOR and by any Subcontractor or Supplier, of any tier, that is asserting all or any portion of the Claim or Protest) and confirmed with mathematical certainty that the losses or damages suffered by CONTRACTOR and /or such Subcontractor or Supplier were in fact suffered in the amounts and for the reasons alleged in the Claim or Protest; and,
4. CONTRACTOR has, with respect to any request for extension of time or claim of delay, disruption, hindrance or interference alleged in or that forms the basis for the Claim or Protest, reviewed the job schedules (including those maintained by CONTRACTOR and by any Subcontractor or Supplier, of any tier, that is asserting all or any portion of the Claim or Protest) and confirmed on an event-by-event basis that the delays or disruption suffered by CONTRACTOR and /or such Subcontractor or Supplier were in fact experienced for the durations, in the manner, and with the consequent effects on the time and/or sequence of performance of the Work, as alleged in the Claim or Protest; and,
5. CONTRACTOR has not received payment from CITY for, nor has CONTRACTOR previously released CITY from, any portion of the Claim or Protest.

Signature: _____

Name:

Title: _____

Company: _____

Date: _____

No Claim or Protest by the CONTRACTOR shall be allowed if made after final payment under this Contract.

55. COMMENCEMENT OF STATUTE OF LIMITATIONS

Unless otherwise provided in this Contract, all claims, counterclaims, disputes and other matters in question between the CITY and the CONTRACTOR arising out of or relating to this Contract or the breach of it will be decided by a Court of competent jurisdiction. It is understood that this Contract is executed and to be performed within the City and County of Los Angeles.

Any applicable statute of limitations shall commence to run and any alleged cause of action by the CONTRACTOR against the CITY arising out of or related to the Project shall be deemed to have accrued in any and all events no later than 30 days after CONTRACTOR'S submittal of its last application for progress payment.

56. GOVERNING LAW

The terms and conditions of this Contract shall be construed and interpreted under, and all respective rights and duties shall be governed by, the laws of the State of California. Wherever applicable each provision of these Contract Documents shall be interpreted in such a manner as to be effective and valid under applicable law, but if any provision of these Contract Documents shall be prohibited by or invalid under applicable law, such provision shall be ineffective to the extent of such prohibition or invalidity, without invalidating the remainder of such provision or the remaining provisions of these Contract Documents.

57. VENUE

This Contract will be executed and performed within the City and County of Los Angeles, California.

58. NO WAIVER OF RIGHTS

Neither the inspection by the CITY, nor any order by the CITY for payment of money, nor any payment for or acceptance of the whole or any part of the Work by the CITY, nor any extension of time, nor any possession taken by the CITY, shall operate as a waiver of any provision of this Contract, or any power herein reserved to the CITY, or any right to damages herein provided, nor shall any waiver of any breach in this Contract be held to be a waiver of any other or subsequent breach.

59. ACCEPTANCE OF FINAL PAYMENT CONSTITUTES RELEASE

The acceptance by the CONTRACTOR of final payment shall release the CITY, the PROJECT MANAGER, the INSPECTOR, their officers, agents, representatives, or employees, as representatives of the CITY, from all claims and all liability to the CONTRACTOR for all things done or furnished in connection with the Work and every act of the CITY relating to or arising out of the Work.

60. PATENTS AND COPYRIGHTS

The CONTRACTOR shall include in its bid the patent fees or royalties on any patented article or process which may be furnished or used in the Work. The CONTRACTOR shall indemnify and hold the CITY harmless from any legal action that may be brought for infringement of patents. The CONTRACTOR'S attention is directed to "Notice of Patents, Data, and Copyright Regulations" of the Federal Labor Standards.

The CONTRACTOR shall bear all costs arising from the use of patented goods and /or processes used on and/or incorporated into the Work. When use of these goods and/or processes are judged to be an infringement and their use is banned, the Contractor, at its own expense, shall, with concurrence of the PROJECT MANAGER, do one of the following:

1. Secure for the CITY the right to continue using goods and/or processes by suspension of the injunction or by procuring a license(s);

2. replace said goods and/or processes with non-infringing goods and /or processes;

3. modify said goods and/or processes so that they become non-infringing; or

4. remove said goods and/or processes and refund the sum paid therefore without prejudice to any other rights of the CITY.

The preceding Subarticle shall not apply to any goods manufactured to the detailed design of the CITY contained in the Contract Documents.

61. PUBLIC RECORDS ACT

All records, documents, plans, specifications and all other information relating to the conduct of the CITY's business, including information submitted by the CONTRACTOR, shall become the exclusive property of the CITY and except as provided by law shall be deemed public records. Said information shall be subject to the provisions of the California Public Records Act (Government Code Sections 6250 *et seq.*).

Under no circumstances, will the CITY be responsible or liable to the CONTRACTOR, submitter or any other party for the disclosure of any records or information submitted to the CITY, regardless of whether such records or information are labeled "TRADE SECRET", "CONFIDENTIAL", or "PROPRIETARY" (or words to similar effect) and regardless of, whether the disclosure is required by law or a court order or occurs through inadvertence, mistake, or negligence on the part of the CITY or its officers, employees, and/or contractors.

The CITY will not advise as to the nature or content of documents entitled to protection from disclosure under the California Public Records Act", including interpretations of the Act or the definition of "Trade Secret". The submitting party shall be solely responsible for all determinations made under the Act, and where appropriate for clearly and prominently marking each and every page or sheet of information with "TRADE SECRET", "CONFIDENTIAL", or "PROPRIETARY". Each submitting party is advised to contact its own legal counsel concerning the California Public Records Act and its applicability to the submitting party's own circumstances.

In the event of litigation concerning the disclosure of any information submitted by the submitting party, the CITY's sole involvement will be as a stake holder, retaining the information until otherwise ordered by a court. The submitting party, at its sole expense and risk, shall be responsible for any and all fees and costs for prosecuting or defending any action concerning the information, and shall indemnify and hold the CITY harmless from all costs and expenses including attorneys' fees, in connection with such action.

THIS PAGE INTENTIONALLY LEFT BLANK

II. GENERAL REQUIREMENTS

GRANADA HILLS PARK
POOL AND BATHHOUSE REPLACEMENT
PROJECT

PREPARED BY:

BUREAU OF ENGINEERING - ARCHITECTURAL DIVISION
DEPARTMENT OF PUBLIC WORK
CITY OF LOS ANGELES

WORK ORDER NO: E170517F

ENGINEERING
CITY OF LOS ANGELES

THIS PAGE INTENTIONALLY LEFT BLANK

CONTENTS
GENERAL REQUIREMENTS

Article **Page**

GENERAL 1
1. ABBREVIATIONS AND REFERENCE STANDARDS 1
CONTRACT DOCUMENTS 4
2. ISSUANCE OF PLANS AND SPECIFICATIONS **(revised as of 03/21/14)** 4
3. DIVISIONS OF SPECIFICATIONS 4
THE CONTRACTOR'S RESPONSIBILITIES 4
4. SITE SECURITY 4
5. ENVIRONMENTAL CONTROL AND MITIGATION 5
6. MOBILIZATION 9
7. REMOVAL, CLEANUP, AND DEMOBILIZATION 11
8. RECORD DRAWINGS 11
9. EXCAVATION SHORING, FORMS, AND FALSEWORK 11
10. SUBMITTALS 12
11. SUBSTITUTIONS AND "OR EQUAL" SUBMITTAL 13
MATERIALS, EQUIPMENT, AND APPLIANCES 14
12. SURVEYING 14
13. SITE INVESTIGATION 15
14. INSPECTION OF THE WORK 15
15. SAMPLING, TESTING AND FABRICATION INSPECTION 16
16. GUARANTY/WARRANTY 18
17. STORAGE OF MATERIALS AND EQUIPMENT 19
PROGRESS OF THE WORK 19
18. CONSTRUCTION SCHEDULE AND COMMENCEMENT OF WORK 19
19. WORK BY CITY OR OTHERS 22
PAYMENT FOR WORK 23
20. PARTIAL PAYMENTS **(Revised as of 02/12/16)** 23
21. PAYMENT FOR MOBILIZATION 24
22. PAY ITEM DEFINITIONS 25
23. SCHEDULE OF VALUES 26
24. NOTICE TO WITHHOLD AND/OR STOP NOTICE 27
25. FINAL PAYMENT 27
26. CHANGE ORDER REQUESTS 27
27. PAYMENT FOR CHANGES AND EXTRA WORK 28
28. PRICE REDUCTION FOR DEFECTIVE COST OR PRICING DATA 35
29. PAYMENT FOR MATERIALS OR EQUIPMENT DELIVERED AND STORED ON THE JOB 36

CONTENTS
GENERAL REQUIREMENTS

Article **Page**

30. PAYMENT FOR MATERIALS OR EQUIPMENT STORED OFF THE JOBSITE 37
31. PAYMENT FOR PERMITS 38
32. AUDIT AND ACCESS TO RECORDS 38
MISCELLANEOUS 39
33. INTERFACE/COORDINATION REQUIREMENTS 39
34. PROGRESS PHOTOGRAPHS 39
35. COMMUNITY RELATIONS 40
36. PROJECT CLOSEOUT 40
ATTACHMENTS 1
ATTACHMENT TO GENERAL REQUIREMENTS ARTICLE 27 1
CHANGE ORDER COST QUOTATION FORM 2

GENERAL

1. ABBREVIATIONS AND REFERENCE STANDARDS

A. ABBREVIATIONS

Wherever the following abbreviations are used they shall have the meanings indicated:

AASHTO	American Association of State Highway and Transportation Officials
ACI	American Concrete Institute
AGA	American Gas Association
AGMA	American Gear Manufacturers' Association
AI	The Asphalt Institute
AISC	American Institute of Steel Construction
AISI	American Iron & Steel Institute
AITC	American Institute of Timber Construction
AMCA	Air Moving and Conditioning Association
ANSI	American National Standards Institute
APA	American Plywood Association
API	American Petroleum Institute
AREA	American Railway Engineering Association
ASCE	American Society of Civil Engineers
ASHRAE	American Society of Heating, Refrigerating, and Air Conditioning Engineers
ASME	American Society of Mechanical Engineers
ASQC	American Society for Quality Control
ASTM	American Society for Testing and Materials
AWPA	American Wood Preservers Institute
AWS	American Welding Society
AWWA	American Water Works Association
CBM	Certified Ballast Manufacturers
CRS	Concrete Reinforcement and Steel Institute
EPA	Environmental Protection Agency
ETL	Department of Building & Safety Electrical Test Laboratory
FCI	Fluid Control Institute, Inc.
ICBO	International Conference of Building Officials
ICEA	Insulated Cable Engineers Association
IEEE	Institute of Electrical and Electronics Engineers
IPCEA	Insulated Power Cable Engineers Association
ISA	Instrument Society of America
LABC	City of Los Angeles Building Code
NAAMM	National Architectural Association of Metal Manufacturers
NEC	National Electrical Code
NECA	National Electrical Contractors Association

NEMA	National Electrical Manufacturers Association
NOAA	National Oceanic and Atmospheric Administration (Dept. of Commerce)
OSHA	Occupational Safety and Health Administration (Dept. of Labor)
PCA	Portland Cement Association
RCSC	Research Council on Structural Connections of the Engineering Foundation
SAMA	Scientific Apparatus Manufacturer's Association
SSPWC	Standard Specifications for Public Works Construction
SWRCB	State Water Resources Control Board
UBC	Uniform Building Code, International Conference of Building Officials
UL	Underwriters Laboratories, Inc.
USGS	United States Geological Survey
WATCH	Work Area Traffic Control Handbook
WCLIB	West Coast Lumber Inspection Bureau
WCRSI	Western Concrete Reinforcing Steel Institute
WRI	Wire Reinforcement Institute
WWPA	Western Wood Products Association

B. REFERENCE STANDARDS

1. APPLICABLE PUBLICATIONS - Whenever in these Specifications references are made to published specifications, codes, standards, or other requirements, it shall be understood that wherever no date is specified, only the latest specifications, standards, or requirements of the respective issuing agencies which have been published as of the date that the Work is advertised for bids shall apply; except to the extent that said standards or requirements may be in conflict with applicable laws, ordinances or governing codes. No requirements set forth herein or shown on the Drawings shall be waived because of any provision of, or omission from, said standards or requirements.

2. SPECIALISTS' ASSIGNMENTS - In certain instances, specification text requires (or implies) that specific Work is to be assigned to specialists or expert entities, which must be engaged for the performance of that Work. Such assignments shall be recognized as special requirements over which the CONTRACTOR has no choice or option. These requirements shall not be interpreted so as to conflict with the enforcement of building codes and similar regulations governing the Work; also they are not intended to interfere with local union jurisdiction settlements and similar conventions. Such assignments are intended to establish which party or entity involved in a specific unit of Work is recognized as "expert" for the indicated construction processes or operations. Nevertheless, the final responsibility for fulfillment of the entire set of Contract requirements remains with the CONTRACTOR.

3. CODES AND SAFETY STANDARDS - Without limiting the generality of other requirements of the Specifications, Work specified herein shall conform to or exceed the applicable requirements of the following Codes and Safety Standards.

   a. Applicable Codes:

      - City of Los Angeles Building Code
      - City of Los Angeles Mechanical Code
      - City of Los Angeles Plumbing Code
      - City of Los Angeles Fire Code
      - City of Los Angeles Electrical Code

   b. References herein to "Building Code" shall mean City of Los Angeles Building Code. Similarly references to "Mechanical Code," "Plumbing Code," "Fire Code," and "Electric Code" shall mean City of Los Angeles Mechanical Code, City of Los Angeles Plumbing Code, City of Los Angeles Fire Code and City of Los Angeles Electric Code respectively.

   c. Applicable Safety Standards:

      - OSHA Regulations for Construction
      - OSHA Standards
      - Cal-OSHA

   d. References herein to "OSHA Regulations for Construction" shall mean Title 29, Part 1926, Construction Safety and Health Regulations, Code of Federal Regulations (OSHA), including all changes and amendments thereto.

   e. References herein to "OSHA Standards" shall mean Title 29, Part 1910, Occupational Safety and Health Standards, Code of Federal Regulations (OSHA), including all changes and amendments thereto.

f. References herein to "Cal-OSHA" shall mean State of California, Department of Industrial Relations, as amended to date, and all changes and amendments thereto which are effective as of the date of construction.

g. The latest edition of the codes as approved and adopted for use by the CITY as of the date of award shall apply to the Work herein, including all addenda, modifications, amendments, or other lawful changes thereto.

4. STANDARD SPECIFICATIONS - References in the Contract Documents to "Standard Specifications" shall mean the Standard Specifications for Public Works Construction (SSPWC), including all current supplements, addenda, and revisions thereof, except that the provisions therein for measurement and payment shall not apply.

5. STANDARD PLANS - References herein to "Standard Plans" shall mean the Standard Plans issued by the City of Los Angeles which drawings are hereby incorporated in and made a part of these Contract Documents, and copies of which are available for a fee.

6. CONFLICT BETWEEN CODES, SAFETY STANDARDS, REFERENCE STANDARDS, DRAWINGS AND OTHER CONTRACT DOCUMENTS - In case of conflict between codes, reference standards, drawings and other Contract Documents, the most stringent requirements shall govern. Conflicts shall be brought to the attention of the PROJECT MANAGER for clarification and directions prior to ordering or providing any materials or labor. The CONTRACTOR shall bid for the most stringent requirements.

CONTRACT DOCUMENTS

2. ISSUANCE OF PLANS AND SPECIFICATIONS

A. Unless otherwise provided in the Contract Documents, the PROJECT MANAGER will furnish to the CONTRACTOR TEN (10) sets each of the Plans, Specifications and, Geotechnical Report without charge. Additional sets desired by the CONTRACTOR or Subcontractors will be furnished upon request, but at the CONTRACTOR's expense.

B. Drawings, Specifications, Special Provisions, and copies thereof are the property of the CITY. They are not to be used on other work. Necessary bid documents will be available to prospective bidders. Bidders will be issued plans and specifications for a fee. This fee is stated in the "Notice Inviting Bids" of the Contract Documents.

C. Standard Plans for the CITY, which are noted on the drawings, are available for a fee. Also see the City of Los Angeles, Bureau of Engineering Web pages for Standard Plans at http://eng.lacity.org/techdocs/stdplans.

3. DIVISIONS OF SPECIFICATIONS

The specifications are arranged into the Construction Specifications Institute (CSI) sixteen (16) Division format with an additional Division 17 for Instrumentation and Controls (if applicable).

A. The organization of the Specifications into divisions, sections, parts, and paragraphs shall not control or limit the CONTRACTOR in dividing the Work among Subcontractors of any tier. The CONTRACTOR shall be solely responsible for all subcontract arrangements of Work regardless of the organization of the specifications.

B. Titles of Specification sections and paragraphs are for convenience of reference only, and do not form a part of the Specifications.

THE CONTRACTOR'S RESPONSIBILITIES

4. SITE SECURITY

A. In addition to the responsibilities specified in other Articles of these Requirements, and the General Conditions, the CONTRACTOR shall be responsible for the security of all its construction equipment, materials, tools, facilities, and vehicles (personal, private, or contractual) while performing the Work of this Contract. This requirement shall be effective twenty-four (24) hours per day for the duration of the Contract. CONTRACTOR shall familiarize themselves with the location of the job site and scan the premises by means necessary to protect the property, including but not limited to, provision of fencing, guards, security system or other means as necessary.

5. ENVIRONMENTAL CONTROL AND MITIGATION

A. CONTROL

1. Fugitive Dust and Smoke Control:

Comply with the requirements of Title 8, California Code of Regulations, concerning handling of asbestos dust.

a. Criteria for Fugitive Dust - Detailed descriptions and explanations of specific impact mitigation measures are contained in South Coast Air Quality Management District (SCAQMD) Rules and Regulations (Rule 403, Limitation on Fugitive Dust Emissions). Key features of mitigation options described are as follows:

i. Do not cause or allow emissions of fugitive dust from any transport, handling, construction or storage activity to remain visible in atmosphere beyond property line of the emission source.

ii. Take precautions to minimize fugitive dust emissions from operations involving demolition, excavation, grading, clearing of land and disposal of solid waste. Utilizes at least one Reasonably Available Control Measure (RACM) for each potential source of fugitive dust. Do not cause or allow particulate matter to exceed 50 mg/m^3 when determined as difference between upwind and downwind samples collected on high volume particulate matter samplers or other EPA approved equivalent method for PM-10 monitoring at the property line for a five hour period during the time of active operations.

iii. Take precautions to prevent visible particulate matter from being deposited upon public roadways as a direct result of their operations. Precautions include, removal of particulate matter from equipment before movement to paved streets or prompt removal of material from paved streets onto which such material has been deposited.

b. As a minimum - Use the following procedures and techniques:

i. Cover loads of materials, debris and soil transported from construction sites. Trim or remove loose material from loads before leaving Project.

ii. Daily or more frequently, if necessary, water down and sweep adjacent streets and sidewalks that have construction vehicles carrying debris and excavated materials.

iii. Establish regular cycles and locations for cleaning trucks that haul soil from site.

iv. Water down construction sites whenever required to suppress dust, particularly during handling of excavation soil or debris or during demolition.

v. If conveyors are used, cover all transfer points along conveyor system moving soil. Minimize drop height to the stockpile. Provide a sprinkler system that will apply water to soil before it drops to stockpile.

vi. Any adapted measures developed by SCAQMD on Best Available Control Measures (BACM) for Fugitive Dust and Rule 403 will be incorporated into the site operations for Fugitive Dust Control.

vii. Burning of wastes is prohibited. Remove scrap and waste material and dispose of in accordance with laws, codes, regulations, ordinances and permits.

viii. Use construction equipment designed and equipped to prevent or control air pollution in conformance with most restrictive regulations of EPA, State and local authorities. Maintain evidence of such design and equipment and make available for inspection by Authority or its designee.

ix. Establish and maintain records of routine maintenance program for internal combustion engine powered vehicles and equipment used on Project. Keep records available for inspection by Authority or its designee.

x. Comply with the requirements of Title 8, California Code of Regulations, concerning handling of asbestos dust.

xi. Implement Fugitive Dust Measures listed in tables 1 and 2 of SCAQMD Rule 403 and perform record keeping in accordance with Sections (e)(1) of said rule. Make records available to Authority or its designee for inspection.

2. Rubbish Control

a. Through all phases of construction, including suspension of Work and until final acceptance of the Project, keep the site of the Work and other areas used by it in a neat and clean condition, and free from an accumulation of rubbish and debris. Dispose of rubbish and waste materials of any nature occurring at the worksite and establish regular intervals of collection and disposal of such materials and waste. Keep CONTRACTOR haul roads free from dirt, rubbish, and unnecessary obstructions resulting from its operations. Take care to prevent spillage on haul routes. Remove such spillage immediately and clean the area. Confine equipment and material storage to areas approved by the PROJECT MANAGER. Dispose of rubbish and surplus materials off the construction site, at the CONTRACTOR's expense, in accordance with local codes and ordinances governing locations and methods of disposal, and in conformance with all applicable safety laws, and the requirements of the OSHA Safety and Health Standards for Construction. Include cleanup cost in the CONTRACTOR's Bid.

3. Sanitation

a. Fixed or portable chemical toilets shall be provided for the use of the CONTRACTOR's employees. These accommodations shall be maintained in a neat and sanitary condition. Toilets at construction job sites shall conform to the requirements of Title 8, California Code of Regulations.

b. Wastewater conveyance and disposal shall not be interrupted. Should the CONTRACTOR disrupt existing sewer facilities, sewage shall be conveyed in closed conduits and disposed of in a sanitary sewer system. Sewage shall not be permitted to flow in trenches or be covered by backfill. Establish a regular schedule for collection of sanitary and organic waste. Dispose of wastes and refuse from sanitary facilities provided by the CONTRACTOR or organic material wastes from any other source related to the CONTRACTOR's operations away from the site in a manner satisfactory to the INSPECTOR and in accordance with laws and regulations pertaining thereto. Dispose of such wastes at the CONTRACTOR's expense.

4. Chemicals

The following paragraph does not relieve the CONTRACTOR from its responsibility for obtaining prior approval from the PROJECT MANAGER for chemical usage when otherwise required.

a. Provide four (4) copies of the MSDS to the PROJECT MANAGER for all chemicals used during Project construction or furnished for Project operation, prior to bringing them on site, whether soil conditioning agents, lubricants, defoliant, soil sterilant, herbicide, pesticide, disinfectant, polymer, soil conditioning agents, lubricants, reactant, or of other classification, which shall show approval of either the U.S. Environmental Protection Agency or the U.S. Department of Agriculture. Use of all such chemicals and disposal of residues shall be in strict accordance with the printed instructions of the manufacturer.

5. Odor Control

a. The CONTRACTOR shall furnish all labor, materials, and equipment required and shall carry out effective measures wherever and as often as necessary to prevent the discharge of a nuisance odor from its operation into the atmosphere in such quantity as will violate the regulations of any legally constituted authority. During construction, the CONTRACTOR shall notify the PROJECT MANAGER and the INSPECTOR at least forty-eight (48) hours in advance when potential odor-causing activities are scheduled for construction.

6. Noise and Vibration - Comply with requirements of CITY noise ordinances and mitigation specified below.

a. Lighting – Shield worksite lighting to prevent disturbance to adjacent properties.

B. MITIGATION

1. General

a. The CONTRACTOR shall mitigate the adverse environmental impacts associated with the Work of the Contract. The CONTRACTOR shall indemnify and hold harmless the CITY from any and all fines, penalties or damages incurred by the CITY for violation of any environmental mitigation measures or permit caused by the CONTRACTOR's failure to comply with environmental mitigation measures of this Article. The measures that the CONTRACTOR shall take to mitigate environmental impacts include, but are not limited to the following:

b. The CONTRACTOR, a minimum of thirty (30) days prior to beginning Work on each new major activity, shall submit a written plan to the PROJECT MANAGER, detailing how the environmental impacts for the activity shall be mitigated. The plan shall include, at a minimum:

i. Anticipated site conditions;

ii. Equipment to be utilized;

iii. Means and methods of construction;

iv. Impacts likely to occur;

v. Mitigation methods to be employed.

2. Storm Water Pollution Control

a. Comply with the State General Construction Activity Storm Water Permit.

b. Minimum Water Quality Protection Requirements – The Contractor is required to meet the

following minimum standards of good housekeeping:

i. Eroded sediments and other pollutants must be retained on site and may not be transported from the site via sheet flow, swales, area drains, natural drainage, or wind.

ii. Stockpiles of earth and other construction-related materials must be protected from being transported from the site by wind or water.

iii. Fuels, oils, solvents, and other toxic materials must be stored in accordance with their listing and are not to contaminate the soil nor the surface waters. All approved toxic storage containers are to be protected from the weather. Spills must be cleaned up immediately and disposed of in a proper manner. Spills may not be washed into the drainage system.

iv. Excess or waste concrete may not be washed into the public way or any drainage system. Provisions shall be made to retain concrete wastes on-site until they can be appropriately disposed of or recycled.

v. Trash and construction-related solid wastes must be deposited into a covered receptacle to prevent contamination of rainwater and dispersal by wind.

vi. Sediments and other materials may not be tracked from the site by vehicle traffic. The construction entrance roadways must e stabilized so as to inhibit sediments from being deposited into the public ways. Accidental depositions must be swept immediately and my not be washed down by rain or by any other means.

c. Wet Weather Erosion Control Plan (WWECP) – Pursuant to Section 61.02 of the LAMC, whenever it appears that the construction site will have grading between October 1 and April 15, the Contractor shall submit a WWECP to the Project Manager for approval within 30 days after award of contract or get approval 30 days prior to the beginning of the rainy season, whichever is longer. Note: Guidance on preparing the WWECP can be found in the Development Best Management Practices Handbook – Part A, Construction Activities adopted by the Board of Public Works on August 2, 1999, as authorized by Section 64.72 of the Los Angeles Municipal Code. This handbook can be obtained at cost at the public/permit counters of the Bureau of Engineering.

d. The Contractor shall file a “Notice of Intent” (NOI) with the State Water Resources Control Board to comply with the California General Construction Activity Stormwater Permit (NPDES No. CAS000002) and prepare and implement a Stormwater Pollution Prevention Plan (SWPP). Whenever the CONTRACTOR is required to get any type of permit from the Department of Building and Safety (DBAS), the CONTRACTOR shall show a Waste Discharge Identification Number (WDID) to the DBAS as proof of submittal of the NOI. If the CONTRACTOR does not need any type of permit from the DBAS, the CONTRACTOR shall show the WDID to the PROJECT MANAGER.

3. Noise and Vibration

a. General

i. The Work specified in this Article consists of eliminating excessive noise and vibration generated by construction activities, complying with applicable noise regulations and specifications requirements, monitoring and reporting noise and vibration measurements.

ii. Use equipment with effective noise-suppression devices and employ other noise

control measures such as enclosures and noise barriers necessary to meet the noise limits specified and to protect the public. Schedule and conduct operations in a manor that will minimize, to the greatest extent feasible, the disturbance to the public in areas adjacent to the construction activities and to occupants of buildings in the vicinity of the construction activities.

iii. Noncompliance Corrective Action – If, at any time prior to or during the construction, complaints are received from the public, the PROJECT MANAGER shall direct the CONTRACTOR to undertake immediate corrective action through equipment modification, additional noise abatement equipment or a change in operating procedures.

b. Construction Vibration

i. Ground-borne vibrations from equipment may have the potential of causing an impact to the existing structure. The CONTRACTOR shall mitigate and/or repair any damage caused by vibration.

6. MOBILIZATION

A. GENERAL

Mobilization shall include, but not be limited to, the following items, all as required for the proper performance and completion of the work:

1. Obtaining all permits, insurance, and bonds.
2. Moving onto the job-site all CONTRACTOR's plant and equipment as required.
3. Erecting temporary buildings and other construction facilities.
4. Installing temporary construction power and wiring.
5. Establishing fire protection system for its temporary facilities.
6. Developing construction water supply.
7. Providing field office trailers for the CONTRACTOR AND INSPECTOR, complete with all specified furnishings and utility services, including telephones.
8. Providing connections to onsite sanitary facilities as specified.
9. Providing for potable water facilities as specified. This includes a means by which all on site contractor, subcontractor or supplier personnel can wash their hands with soap.
10. Arranging for and erection of CONTRACTOR's work and storage yards and sheds.
11. Submittal of all required Subcontractor insurance certificates and bonds.
12. Posting all CAL-OSHA required notices and establishment of safety programs.
13. Have the CONTRACTOR's representative at the job site full time.
14. Furnishing of Construction Schedule, Bid Breakdown and Submittal Schedules.

B. TEMPORARY CONSTRUCTION UTILITIES AND WORKSITE FACILITIES

The Contractor shall provide the following worksite facilities, as indicated below:

Yes (1) The Contractor shall provide adequate sanitary conveniences for use of persons employed on the work. These conveniences shall be properly secluded from public observation and maintained in a neat and sanitary condition in the manner and places required by the Project Manager. The use of these conveniences shall be strictly enforced, and they shall be maintained at all times until completion of the work, when they shall be removed from the premised and the area left clean and free from any nuisance. They shall also comply with all

applicable laws, ordinances and regulations pertaining to the public health and sanitation of dwelling and camps.

Wastewater shall not be interrupted. Should the Contractor disrupt existing sewer facilities, sewage shall be conveyed in closed conduits and disposed of in a sanitary sewer system. Sewage shall not be permitted to flow in trenches or be covered by backfill.

Yes (2) The Contractor shall provide the power and light needed for construction until permanent meter installation is completed. The Contractor shall make all necessary arrangements with the City Department of Water and Power; assume all costs; and make and remove all connections to power facilities as necessary for required tests.

Yes (3) The Contractor shall provide the water needed for construction until permanent meter installation is completed. The Contractor shall make all necessary arrangements with the City Department of Water and Power; assume all costs; and make and remove all connections to water facilities as necessary for required tests.

Yes (4) The Contractor shall provide the gas needed for construction until permanent meter installation is completed. The Contractor shall make all necessary arrangements with the Gas Company; assume all costs; and make and remove all connections to gas facilities as necessary for required tests.

Yes (5) The Contractor shall provide a temporary shed on the site for the safe storage of his material and equipment. The floor shall be weathertight with a wood floor above grade. The shed shall be removed upon completion of the work or by order of the General Manager.

Yes (6) The Contractor shall provide an office for the Inspector for the entire period of construction or until the General Manager orders its removal. The office, to be located as the General Manager directs, shall be weathertight and have not less than 100 square feet floor area; screened windows that open in opposite walls; a door with latch set and hasp for padlocking; a built in counter of sufficient size for a full set of job blue prints with a drawer for filing 9" x 12" folders; a stool and a plan rack for drawings; an electric heater, a 12" electric fan and electric lights.

Yes (7) The Contractor shall provide a job telephone for the use of City personnel only. The Contractor shall make all necessary arrangements with the telephone company; assume all costs and pay for all calls. The telephone is to be located so that it is easily accessible from the job office and provided with an outside extension bell.

Yes (8) The Contractor shall maintain temporary drainage to keep excavations, pits and trenches free of water accumulation, by pumping if necessary. The Contractor shall protect against damage caused by water backing up in sewers and drains.

Yes (9) The Contractor shall exercise every reasonable precautions to protect channels, storm drains and bodies of water from pollution; and shall conduct and schedule construction operations so as to minimize or avoid muddying and silting of said channels, drains and waters. Water pollution control work shall consist of constructing any facilities which may be required to prevent, control and abate water pollution.

The Project Manager, authorized representative of the General Manager, in charge of this project is:

Alex Ngo at (213) 825-4821

All correspondence should be addressed to the Project Manager at [Note new address as of 03/29/12]:

Department of Public Works, Bureau of Engineering
Recreation and Cultural Facilities Program
1149 S. Broadway, Suite 830
Los Angeles, California 90015

7. REMOVAL, CLEANUP, AND DEMOBILIZATION

A. Upon completion of the contracted Work, remove all CONTRACTOR tools, materials and other articles from the CITY's property. Should the CONTRACTOR fail to take prompt action to this end, the CITY at its option and without waiver of such other rights as it may have, on thirty (30) calendar days notice, may

treat them as abandoned property. Sweep floors broom clean, clean exterior and interior surfaces and windows and remove rubbish and debris resulting from the contracted Work and maintain the job site in a clean, orderly and safe condition at all times until completion of the physical Work and written Notice of Partial Acceptance. Failure to comply with this requirement shall be grounds for the CITY to assess clean-up costs in the amount of 5% of the mobilization cost.

8. RECORD DRAWINGS

A. Record Drawings are full size drawings (Plans) which are marked up during construction to delineate the actual in-place constructed conditions. Record Drawings shall be provided by the CONTRACTOR for this Project. Requirements for Record Drawings as specified elsewhere shall supplement the requirements specified herein.

B. Record Drawings shall include all changes in the plans including those issued as Change Orders, Plan Clarifications, Addenda, Notice to Bidders, responses to Requests for Information, Jobsite Memos, and any additional details needed for the construction of the Project but not shown on the plans. Substructures encountered while excavating that are left in place shall be located by survey, to the satisfaction of the PROJECT MANAGER, shown, and identified on the Record Drawings. Substructures, including but not limited to concrete structures, electrical conduit and duct banks, drains and sanitary sewer pipelines, process piping, water lines, etc, whose installed location differs from that shown on the original plans shall be precisely located by survey to the satisfaction of the PROJECT MANAGER and recorded on the as-built drawings before backfilling.

C. Mark Record Drawings with red ink or chemical fluid on one (1) set of full size prints to produce a record of the complete installation. Prepare additional drawings that may be required to indicate record conditions on 24" x 36" paper. Additions to Contract Drawings shall employ and use drafting standards, which are consistent with the drafting standards, used in the Contract Drawings.

D. Keep Record Drawings on the job and update during construction and make available for the PROJECT MANAGER'S inspection and copying at all times. The PROJECT MANAGER will review the Record Drawings before submittal of monthly payment requests. If in the opinion of the PROJECT MANAGER, the Record Drawings are not current, approval of the monthly payment may be withheld until the drawings are made current. Submit a signed certification with each monthly payment request stating that the Record Drawings are current and accurate as of the date of the payment request.

E. Where the plans are diagrammatic or lacking precise details, produce dimensioned full size sheets as the Record Drawings. For installations outside of structures, the locations shall be given by coordinates and elevations. Where substructures are encased in concrete, the outside dimensions of the encasement shall also be given.

F. In the case of those drawings which depict the detail requirements for equipment to be assembled and wired in the factory, the Record Drawings shall be updated by indicating those portions which are superseded by final Shop Drawings and by including appropriate reference information describing the Shop Drawings by manufacturer, drawing and revision numbers.

G. At the completion of the Work and after final inspection, copy the Record Drawing (as installed) data, using red ink, onto a new set of high quality prints provided by the CITY. Certify to the completeness and accuracy of the "as installed" information indicated on the prints with its signature. Then deliver as a submittal to the PROJECT MANAGER for review and approval both the field developed prints and the final signed prints as a condition precedent to the CITY'S release of any retained funds.

9. EXCAVATION SHORING, FORMS, AND FALSEWORK

A. Whenever Work under the Contract involves trench excavation five (5) feet or more in depth, or any kind of shoring, design and prepare plans for the required shoring, bracing, and sloping. In addition to the Division 2 specified requirements, submit plans and calculations to the PROJECT MANAGER in advance of excavation to ensure workers' protection from the hazard of caving ground during the excavation. If such plan varies from the shoring system standards established by the Cal-OSHA Construction Safety

Orders, the plan shall be prepared by a California registered civil or structural PROJECT MANAGER employed by the CONTRACTOR, and include all costs therefore in the price named in the Contract for completion of the Work as set forth in the Contract Documents. Nothing in this Article shall be deemed to allow the use of a shoring, sloping, or other protective system less effective than that required by the Construction Safety Orders. Nothing in this Article shall be construed to impose liability on the CITY, PROJECT MANAGER, INSPECTOR, or any of their officers, agents, representatives, or employees.

B. Secure approval, in advance, from authorities concerned for the use of any bridges proposed by it for public use. Temporary bridges shall be clearly posted as to load limit, with signs and posting conforming to current requirements set forth in the Traffic Manual published by the California Department of Transportation, covering "signs". This manual shall also apply to the street closures, barricades, detours, lights, and other safety devices required.

C. Comply fully with the requirements of the Cal-OSHA Construction Safety Orders, regarding the design of forms, false work, and shoring for concrete placement, and the inspection of same before placement of concrete. Where the Construction Safety Orders requires the services of a civil PROJECT MANAGER registered in the State of California to approve design calculations and Working Drawings of the false work or shoring system, to inspect such system prior to placement of concrete, employ a registered civil PROJECT MANAGER for these purposes, and all costs therefore shall be included in the price named in the Contract for completion of the Work as set forth in the Contract Documents.

D. No Work under this Article shall start until the PROJECT MANAGER has accepted the plans and the CONTRACTOR has obtained permits required and furnished a copy to the PROJECT MANAGER.

10. SUBMITTALS

A. Furnish a schedule and list of required submittals to the PROJECT MANAGER, in accordance to CONTRACTOR'S CONSTRUCTION SCHEDULE AND REPORTS of these General Requirements, including required submittals by Subcontractors.

B. Wherever called for in these specifications or on the plans, or where required by the PROJECT MANAGER, furnish to the PROJECT MANAGER for review 10 copies of each submittal. The term "submittal" as used herein shall be understood to include detail design calculations, design drawings, Shop Drawings, Working Drawings fabrication and installation drawings, erection drawings, lists, graphs, operating instructions, catalog sheets, data sheets, samples, and similar items. Unless otherwise required, Submit said submittals to the PROJECT MANAGER at a time sufficiently early (see paragraph F. below) to allow review of same by the PROJECT MANAGER and to accommodate the rate of construction progress required under the Contract without delaying the Contract Work and with due regard for the possibility of resubmittals. Submittals shall be in English.

C. Design or Shop Drawings or other submittal shall be accompanied by the standard "CONTRACTOR's SUBMITTAL TRANSMITTAL" form. A submittal not accompanied by such a form, or where all applicable items on the form are not completed, or are incorrectly completed, may be returned, at the PROJECT MANAGER'S discretion, for resubmittal.

D. Normally, a separate transmittal form shall be used for each specific item or class of material or equipment for which a submittal is required. Transmittal of a submittal of various items using a single transmittal form will be permitted only when the items taken together constitute a manufacturer's "package" or are so functionally related that expediency indicates a review of the group or package as a whole. A multiple-page submittal shall be collated into sets, and each set shall be stapled or bound, as appropriate, prior to transmittal to the PROJECT MANAGER.

E. Shop Drawings shall show in detail the size, sections, and dimensions of all the member(s); the arrangement and construction of all connections and joints; all holes, straps, and other fittings required for attaching Work; and other pertinent details. When required, PROJECT ENGINEERING computations

shall be submitted. Be responsible for delivering reviewed copies of Shop Drawings to all others whose Work is dependent thereon. Maintain at the site of the Project, a complete file of approved Shop Drawings and manufacturers' data for this Project, at all times.

F. Except as may otherwise be provided herein, the PROJECT MANAGER will make a reasonable attempt to return prints of each submittal to the CONTRACTOR, with its comments noted thereon, within 30 calendar days following their receipt by the PROJECT MANAGER. It is considered reasonable that the CONTRACTOR shall make a complete and acceptable submittal to the PROJECT MANAGER by the second submission of a submittal item. The CITY reserves the right to withhold moneys due the CONTRACTOR to cover additional costs of the PROJECT MANAGER's review beyond the third submittal. Submittal will be returned to the CONTRACTOR with one of three (3) markings:

G. If three (3) copies of a submittal are returned to the CONTRACTOR marked "NO EXCEPTIONS TAKEN/PROCEED," formal revision and resubmission of said submittal will not be required.

H. If three (3) copies of a submittal are returned to the CONTRACTOR marked "MAKE CORRECTIONS NOTED/PROCEED CONDITIONALLY," formal revision and resubmission of said submittal will not be required.

I. If one (1) copy of a submittal is returned to the CONTRACTOR marked "REJECTED-RESUBMIT/DO NOT PROCEED," revise said submittal and resubmit TEN (10) copies of said revised submittal to the PROJECT MANAGER.

J. Work for which Shop Drawings are required shall be performed in accordance with the reviewed and approved copies. Fabrication of an item shall not commence before the PROJECT MANAGER has reviewed the pertinent submittal and returned the copies to the CONTRACTOR marked either "NO EXCEPTIONS TAKEN/PROCEED," or "MAKE CORRECTIONS NOTED/PROCEED CONDITIONALLY." Revisions indicated on submittals shall be considered as changes necessary to meet the requirements of the Contract Documents and shall not be taken as the basis for claims for extra Work.

K. CONTRACTOR submittals shall be carefully reviewed by an authorized representative of the CONTRACTOR prior to submission to the PROJECT MANAGER. Each submittal shall be dated, signed, and certified by the CONTRACTOR as being correct and in strict conformance with the Contract Documents. No consideration for review by the PROJECT MANAGER of any CONTRACTOR submittal will be made for any items that have not been so certified by the CONTRACTOR. Non-certified submittals will be returned to the CONTRACTOR without action taken by the PROJECT MANAGER, and any delays caused thereby shall be the total responsibility of the CONTRACTOR.

L. The PROJECT MANAGER's review of CONTRACTOR submittal shall not relieve the CONTRACTOR of the entire responsibility for the correctness of details and dimensions and conformance to the specifications. Assume all responsibility and risk for any misfits due to any errors in the submittal. Any fabrication or other Work performed in advance of the receipt of accepted submittals shall be entirely at the CONTRACTOR's risk and expense. Be responsible for the dimensions and the design of adequate connections and details.

11. SUBSTITUTIONS AND "OR EQUAL" SUBMITTAL

A. Make "Or Equal" submittals within thirty (30) calendar days after issuance of Notice-to-Proceed. A request or submittal received after the specified period will be considered as NOT EQUAL to that so specified and will be processed as a substitution described hereinafter.

B. Clearly identify manufacturers' data submitted to the PROJECT MANAGER for review and acceptance each proposed substitute with the corresponding Contract Drawing detail and Specification section. If the PROJECT MANAGER decides to accept for use in the Project a material, process or article which is not the equal of that specified, make substitution in the manner described in Article 52 CHANGES AND

EXTRA WORK of the General Conditions, with a credit to the CITY for the difference in value.

C. The PROJECT MANAGER will determine whether the material offered is equivalent to that specified. Any revision to structures, piping, mechanical, electrical, instrumentation, or any other Work made necessary by such substitution must be approved by the PROJECT MANAGER, and the entire cost both direct and indirect of these revisions shall be borne by the CONTRACTOR.

D. Materials, processes, or articles may be requested as a substitution by the CONTRACTOR, in lieu of that specified, under the following conditions:

1. Submit in writing and in the manner described in SUBMITTAL of these General Requirements.

2. Submit thirty (30) calendar days before starting the Work, as established by the PROJECT MANAGER, so as not to cause any delay in completion of the Project. No other request will be considered after expiration of the period specified, except that in exceptional cases where it is determined to be in the best interest of the CITY, as approved by the PROJECT MANAGER.

3. Agree to pay for all PROJECT ENGINEERING and design services, if required, to make changes and adjustments in material and Work of trades directly or indirectly affected by the substitute, to the satisfaction of the PROJECT MANAGER, at no cost to the CITY.

4. All requests for substitution shall be made through the CONTRACTOR. Submissions by the CONTRACTOR shall imply the CONTRACTOR's approval of such substitution.

5. No requests for substitutions will be considered during the bidding period.

6. Furnish adequate data with each request for approval of a substitute to enable the PROJECT MANAGER to evaluate the proposed substitution.

MATERIALS, EQUIPMENT, AND APPLIANCES

12. SURVEYING

A. DEFINITIONS

1. CONTRACTOR's Surveyor - Shall be a registered (licensed) Land Surveyor or Registered Civil Engineer authorized to practice land surveying by the State of California in compliance with Business and Professions Code Section 8700, *et. Seq*. cited as the Land Surveyor's Act.

2. Construction Stakes - Durable markers that will maintain elevations, station, and offset for the duration of use as reference markers for construction.

3. Surveying - Described in Section 8726 of the Land Surveyor's Act.

4. Survey Manual - City of Los Angeles, Bureau of PROJECT ENGINEERING Manual, Part J – Survey.

B. SURVEY SERVICES

1. The CONTRACTOR's Surveyor shall comply with State Law and the latest edition of the Standard Specifications for Public Works Construction, "Green Book", and its supplement.

a. The contractor shall employ the Contractor's Surveyor.

b. All work shall utilize CCS 83, Zone 5, and NAVD 88 control systems.

c. CONTRACTOR's Surveyor to utilize horizontal & vertical control provided by PROJECT MANAGER and referenced on drawings.

d. Work shall conform to the lines, elevations, and grades shown on the plans.

e. CONTRACTOR's Surveyor shall notify the PROJECT MANAGER, in writing, of all material discrepancies between existing survey control and the current Work. Any material discrepancies shall be resolved prior to start of construction.

f. During progress of construction, CONTRACTOR's Surveyor to provide surveying services as necessary, or as requested by PROJECT MANAGER or INSPECTOR, to assure construction complies with Contract Documents.

g. CONTRACTOR's Surveyor shall fulfill duties of "PROJECT MANAGER" described in Standard Specifications for Public Works Section 2.9, Surveying, except that the City forces shall be notified 7 days prior to the CONTRACTOR disturbing any street centerline control monuments so they can be preserved by City forces.

2. Safety - CONTRACTOR's Surveyor shall conform to recommended safety standards for all Work, as set forth in the latest edition of Work Area Traffic Control Handbook (WATCH) adopted by the City of Los Angeles Board of Public Works. Compliance with the Confined Space Regulations in the California Code or Regulations, Title 8, Section 5157 of the Cal/OSHA Safety Orders is mandatory.

C. CONSTRUCTION SURVEYS:

1. Conform to Survey Manual Part J, Section J 600 of Bureau of PROJECT MANAGER.

2. CONTRACTOR's Surveyor - Provide all reference stakes and form checks necessary for construction and inspection of improvements. Document construction staking in survey field notes as described in Part C.4 in this Article. Staking may include, but is not limited to - removals, joins, rough grade, slope, utilities, storm drain, sewer, curb, walk, paving, wall, tunnels, building stakes and other staking necessary for construction and inspection.

3. Form Checks - CONTRACTOR's Surveyor to check forms where durable points may be disturbed, removed, or is impractical to be used to verify the design location. Record measured location in survey field notes as described in Part C.4 in this Article. Notify PROJECT MANAGER of all variations from plan locations.

4. Staking Interval and Offset Lines - Staking intervals shall be in accordance with Survey Manual, Figure J 615.225A. CONTRACTOR's Surveyor to set stake lines at an offset distance from the improvement to ensure proper grade, station and alignment.

5. Utility Stakes - CONTRACTOR's Surveyor shall provide stakes for utilities, public or private, which require location or relocation unless PROJECT MANAGER states otherwise.

13. SITE INVESTIGATION

A. Before beginning the Work, inspect related and appurtenant Work and report in writing to the PROJECT MANAGER conditions which will prevent proper completion of the Work. Except as provided for in Article 53, DIFFERING SITE CONDITIONS, of the General Conditions, failure to report any such conditions shall constitute acceptance of all site conditions, and required removal, repair, or replacement caused by unsuitable conditions shall be performed by the CONTRACTOR at its sole cost and expense without any adjustment in the Contract Price or extension of the Contract Completion Date.

14. INSPECTION OF THE WORK

A. Whenever the CONTRACTOR intends to carry on the Work of this Contract on a Saturday, Sunday, or holiday, or more than two eight (8) hours a day shifts on Monday through Friday, or any variation in the time of the workday as set forth in the GENERAL CONDITIONS, length of the workday and work week, notification shall be given to the INSPECTOR and the PROJECT MANAGER of such intention at least forty-eight (48) hours in advance so that inspection may be arranged. No Work shall be allowed during

these times without the approval of the INSPECTOR and no demolition will be permitted on Saturdays, Sundays, or holidays without the prior approval of the Board. All CITY inspection required by the CONTRACTOR on holidays, weekends and overtime for the sole convenience of the CONTRACTOR shall be accomplished at the sole expense of the CONTRACTOR by issuance of a deductive Change Order.

B. Conduct the Work under the general observation of the PROJECT MANAGER and be subject to inspection by the INSPECTOR to ensure compliance with the requirements of the Contract Documents. Such inspection may include mill, Plant, shop or field inspection, as required. The INSPECTOR shall be permitted access to all parts of the Work, including Plants where materials or equipment are manufactured or fabricated. Materials and articles furnished by the CONTRACTOR shall be subject to inspection, and no materials or articles shall be used in the Work until they have been inspected and accepted by the INSPECTOR.

C. Do not backfill, bury, cast concrete, hide or otherwise cover Work until it has been inspected by the INSPECTOR, and other Agencies from which a permit is required. Whenever the CONTRACTOR is ready to backfill, bury, cast in concrete, hide, or otherwise cover any Work under the Contract, notify the INSPECTOR not less than forty-eight (48) hours in advance to request inspection before beginning such Work of covering. Failure of the CONTRACTOR to notify the INSPECTOR at least forty-eight (48) hours in advance of such inspections will be cause for the INSPECTOR to require a sufficient delay in the progress of Work to allow time for such inspections and any remedial or corrective Work required, and costs of such delays, including its effect upon other portions of the Work, shall be borne by the CONTRACTOR. Work so covered in the absence of inspection shall be subject to uncovering at the sole expense of the CONTRACTOR. Where uninspected Work cannot be uncovered, such as in concrete cast over reinforcing steel, such Work shall be subject to demolition, removal, and reconstruction under proper inspection, and no additional payment will be allowed therefore.

D. The presence of the PROJECT MANAGER or the INSPECTOR, shall not relieve the CONTRACTOR of the responsibility for the proper execution of the Work in accordance with all requirements of the Contract Documents. Compliance is a duty of the CONTRACTOR, and said duty shall not be avoided by any act or omission on the part of the PROJECT MANAGER or the INSPECTOR. If the CONTRACTOR fails to replace any defective or damaged Work or material after reasonable notice, the INSPECTOR may cause such Work or materials to be replaced. The replacement shall be deducted from the amount to be paid to the CONTRACTOR, otherwise the CONTRACTOR shall pay the CITY if there remains insufficient or no amount to be paid by the CITY to the CONTRACTOR.

E. The INSPECTOR will have the right, at all times and places, to reject any articles or materials to be furnished hereunder which, in any respect, fail to meet the requirements of these specifications, regardless of whether the defects in such articles or materials are detected at the point of manufacture or after completion of the Work at the site. If the INSPECTOR, through an oversight or otherwise, has not rejected materials or Work which is defective or which is contrary to the specifications, such material, no matter in what stage or condition of manufacture, delivery, or erection, may be rejected by the INSPECTOR upon discovery. Promptly remove rejected articles or materials from the site of the Work after notification of rejection. Costs of removal and replacement of rejected articles or materials as specified herein shall be borne by the CONTRACTOR.

F. At the completion of Work, after completion of all corrections, a final inspection will be made by the INSPECTOR, the PROJECT MANAGER, and the CONTRACTOR, as applicable. The INSPECTOR will provide a Final Inspection Correction List itemizing all Work necessary to complete the Project satisfactorily.

15. SAMPLING, TESTING AND FABRICATION INSPECTION

A. GENERAL

1. Materials and fabricated articles furnished by the CONTRACTOR may be subject to inspection and testing and no materials or fabricated articles shall be incorporated into the Work until they have been accepted by the INSPECTOR. The CONTRACTOR shall ensure that all items requiring shop inspection are inspected at their source as required by the CONTRACT.

2. Fabrication may be subject to inspection by the INSPECTOR, to ensure strict compliance with the requirements of the Contract Documents. Such inspection may include mill, plant, shop or field inspection, as required. The PROJECT MANAGER or INSPECTOR shall be permitted access to all parts of the Work, including Plants where materials or equipment are manufactured or fabricated. When a third party inspector is approved, meetings may be scheduled with the PROJECT MANAGER or INSPECTOR at the manufacturing facility to review the progress of the Work and the inspection activities.

3. Fabricate items using Shop Drawings that have been submitted to the PROJECT MANAGER and approved in accordance with SUBMITTALS of the GENERAL REQUIREMENTS. Provide shop inspection on materials and/or equipment so designated on the CONTRACTOR's approved Shop Drawings.

4. Material which is subject to or requires shop inspection and arrives at the job site without inspection by the INSPECTOR will be rejected by the INSPECTOR and shall be removed from the job site by the CONTRACTOR at the CONTRACTOR's sole expense.

B. SAMPLES AND TEST SPECIMENS

1. CONTRACTOR shall obtain, perform and pay for all testing. Testing shall be performed at a certified laboratory approved by the PROJECT MANAGER.

2. Samples and test specimens required under these specifications shall be furnished, prepared for testing, and delivered, to the approved testing laboratory at no cost to the CITY.

3. In addition to any other inspection or quality assurance provisions that may be specified, the PROJECT MANAGER or the INSPECTOR shall have the right to independently select, test, and analyze, at the expense of the CITY, additional test specimens of any or all of the materials to be used. Whenever any portion of the Work fails to meet the requirements of the specifications as shown by the results of independent testing or investigation all costs of such independent inspection and investigation, and all costs of removal, correction, and reconstruction or repair of any such Work shall be borne solely by the CONTRACTOR.

4. When the manufacturer, fabricator, supplier, or subcontractor provides the results of tests from samples taken at the mill, factory, or warehouse, the PROJECT MANAGER or INSPECTOR will accept the test reports provided the following conditions are met:

   a. The Testing Agency was approved by the PROJECT MANAGER or INSPECTOR prior to performing the tests, and that all necessary certifications were valid at the time the tests were performed.

   b. The tests were performed in conformity with the specifications for the specified materials or items.

   c. The reports are made in the form of an affidavit specified hereinafter.

5. Whenever the approved independent testing laboratory or inspector takes samples of materials other than at the site, the deliveries to the site of materials represented by such samples shall be identified as specified for the specific material. The results of such tests shall be reported to the INSPECTOR in the form of affidavits attested to by the testing agency. Such affidavits shall furnish the following information with respect to the material sampled:

   a. Manufacturer's name and brand.

   b. Place of sampling.

c. Sufficient information to identify the lot, group, bin, or silo from which the samples were taken.

d. Amount of material in the lot sampled.

e. Statement that the material has passed the requirements.

f. Notarized signature and title of the person making the affidavit and the date of execution of the affidavit.

6. THIRD PARTY INSPECTION REQUIREMENTS

a. The proposed third party inspection and/or testing company must gain approval by the PROJECT MANAGER after award. Obtain this approval before producing any material or manufacturing any product or equipment. The approved inspection and/or testing agency shall not sublet or assign its Work to any other agency.

b. Comply with requirements as identified in the CONTRACT.

c. The Work and activities of the third party inspection and/or testing agency shall be monitored by the INSPECTOR during meetings to ensure compliance with the Contract Documents.

7. THIRD PARTY TESTING AND INSPECTION LABORATORY APPROVAL PROCEDURES

a. The PROJECT MANAGER will approve third party inspection and/or testing agencies/laboratories.

b. Requests for approval of a third party inspection agency and/or test laboratory shall be in writing from the CONTRACTOR to the PROJECT MANAGER.

c. The letter requesting approval of a third party test laboratory and/or private inspection agency shall contain all of the following information:

i. Complete title of Project.

ii. Project Work order number.

iii. Name of proposed testing laboratory or inspection agency.

iv. Address and telephone number of proposed testing laboratory/inspection agency.

v. Contact person at proposed testing laboratory/inspection agency.

d. The PROJECT MANAGER will notify the CONTRACTOR by letter if the testing laboratory/inspection agency has been approved.

16. GUARANTY/WARRANTY

A. The CONTRACTOR shall and does hereby warrant and guaranty that Work executed under this Contract will be free from defects of materials and workmanship for a period of one (1) year from the date of final acceptance of the Project by the Recreation and Park Commission, except certain specific items of Work, materials and equipment requiring a guaranty or warranty for a greater period of time as hereinafter specified. In the event, that portions of the Work are sufficiently complete to allow use or occupancy by the CITY in the manner and for the purposes intended prior to final completion and acceptance of the Project, the guarantee period for those portions will commence on the date shown on the Statement of Partial Completion.

B. The CONTRACTOR hereby agrees to indemnify and save harmless the CITY, and their officers, agents and employees against and from all claims and liability arising from damage and injury due to said defects. The CONTRACTOR shall repair or replace, at no cost to the CITY, any and all such defective Work and all other Work damaged thereby, which becomes defective during the term of the above-

mentioned guaranties and warranties.

C. Within thirty (30) calendar days prior to completion of all Work the CONTRACTOR shall submit to the PROJECT MANAGER original copies of all manufacturers guaranties covering all supplied and installed equipment and, where applicable, systems.

D. In addition to the requirements of Contract Bonds, of the General Conditions, it shall be understood that the Surety for the faithful performance bond, submitted in conformance with the terms of the Contract for this Project, is liable on its bond for all obligations of the CONTRACTOR including guaranty provisions.

E. The CONTRACTOR shall, within twenty-four (24) hours of notice from the PROJECT MANAGER of any Work not in accordance with the requirements of the Contract, or any defects in the Work, commence and prosecute with due diligence all work necessary to fulfill the terms of this Article and to complete the Work within a period of time as approved by the PROJECT MANAGER. In the event of failure by the CONTRACTOR and/or its surety to respond to the notice or to complete the Work required by this Article within the time specified, the CITY shall proceed to have such Work done at the CONTRACTOR's expense. The CONTRACTOR or its Surety shall promptly reimburse the CITY all direct and indirect cost associated with performing this Work.

17. STORAGE OF MATERIALS AND EQUIPMENT

A. Store and protect materials and equipment in accordance with the manufacturer's instructions, with seals and labels intact and legible. Exercise measures necessary to ensure preservation of the quality, quantity, and fitness of the materials or equipment and perform the manufacturers recommended maintenance of the material or equipment. Absorb any and all cost incurred to store, protect, and maintain the materials and equipment without modification to the Contract Amount.

B. Do not store construction materials in streets, roads, or highways for more than 5 days after unloading. Materials or equipment not installed or used in construction within 5 days after unloading shall be stored elsewhere by the Contractor at its expense unless authorized additional storage time.

C. Do not store construction equipment at the worksite before its actual use on the Work, nor after use for more than 5 days after it is no longer needed.

D. Excavated material, except that which is to be used as backfill in the adjacent trench within three days shall not be stored in public streets unless otherwise permitted. Remove excess material after placing backfill from the site immediately.

PROGRESS OF THE WORK

18. CONSTRUCTION SCHEDULE AND COMMENCEMENT OF WORK

A. After notification of award and prior to start of any work, the Contractor shall submit its Schedule of Values to the Project Manager for review and approval. Upon approval of the Schedule of Values, and prior to start of any contract work, other than mobilization, the Contractor shall submit its Baseline Schedule to the Project Manager for acceptance. The Baseline Schedule shall be based on the approved Schedule of Values. The approved Schedule of Values work items shall be the basis for the construction elements for the accepted Baseline Schedule and the Monthly Billing items. As a minimum the Baseline Schedule shall indicate the work plan of all specifications sections. The Baseline Schedule shall include, but is not limited to: all items noted on I.2.a. through I.2.f. and I.2.h. through I.2.o. The Baseline Schedule shall recognize the protection, removal, or relocation of utilities and how they affect construction. The Baseline Schedule shall also reflect completion of all work under the Contract within the specified time and in accordance with the Specifications.

Unless otherwise provided, the Contract time shall commence as indicated in the Notice-to-Proceed letter. The Work shall start within 10 days thereafter, and be diligently prosecuted to completion within the time provided in the Specifications or as modified through change order.

Upon acceptance of the Baseline Schedule by the Project Manager, the Contractor shall maintain a copy of the accepted schedule in the jobsite office, recording thereon progress of the work at the end of each

calendar week.

B. Methodology: The Baseline Schedule and all Updated Progress/Recovery Construction Schedules (UPRS) shall be in the form of a Critical Path Method schedule showing chronological relationship of all activities of the project. The principles and definitions of the terms used herein shall be as set forth in the Associated General Contractor's publication "As-Planned CPM Schedule - Handbook", latest edition. To the extent there are any conflicts between the Associated General Contractor's publication and the Specifications, the Specifications shall govern. The Contractor shall utilize Primavera Sure-Trak 3.0 or Microsoft Project 2000 as the computer program for formatting the Baseline Schedule, and subsequent updated schedules.

C. The Contractor shall have the right to complete the job in advance of the scheduled completion date and within the allowable days allotted for the project. In the event that the Contractor elects to finish the project in advance, a Change Order shall be issued to reflect reduced duration and revised completion date. The Contractor shall not be entitled to any additional compensation for early project completion.

D. A schedule showing the Work completed in less than the Contract Time, which has been accepted by Owner and amended by Change Order, shall be considered to have Project Float. The Project Float is the time between the scheduled completion of the Work and Contract Substantial Completion. Project Float is a resource available to both City and Contractor. No compensation shall be due to the Contractor for use of this float time by either party.

E. Float Ownership: Neither City nor Contractor owns float. The Project owns the float. As such, liability for delay of any Substantial Completion date rests with the party whose actions, last in time, actually cause delay to a Substantial Completion date.

F. The Contractor shall forward to the General Manager, along with the monthly Request for Payment, the Updated Schedule, referred to in Section B of this Article, indicating the progress of any part of the work not up to Baseline Schedule, stating the existing status, cause of delay, impact of change orders and approximate time of completion.

G. If the Contractor should fall behind the progress schedule by more than one month, the Contractor must provide the General Manager with an Updated Progress/Recovery Schedule (UPRS). Failure to comply with the full requirements of this Article shall be cause for withholding all future progress payments until full compliance. Failure to provide more than 2 consecutive Updated Schedules or UPRS shall constitute grounds for cancellation of the project.

H. The Department reserves the right to request a two-week "look ahead" schedules if the Department determines that the submitted UPRS does not reflect the as-built condition, manpower utilization or sequential progress necessary to fulfill the intent of the UPRS.

I. Network Details:

1. The Schedule shall include time-scaled network diagram, based on working days, as well as tabulations. It shall be constructed to show the order in which the Contractor proposed to carry out the Work, to indicate restrictions of access and to show availability of work areas, and availability and use of manpower, materials and equipment. The Contractor shall utilize the Schedule in planning, scheduling, coordinating, and performing the Work under the Contract (including activities of Subcontractors, equipment venders, and Suppliers). Provide the Project Manager with written confirmation of the concurrence of listed trade Subcontractors and Suppliers with the Schedule. Major trade Subcontractors and Suppliers shall approve the Schedule before they are submitted.

2. The Schedule shall provide the Project Manager and Inspector with a tool to monitor and follow the progress of all phases of the Work. The Schedule submitted to the Project Manager shall comply with all limits imposed by the scope of Work, and with all constraints, restraints or sequences included in the Contact. The degree of detail shall include factors to the satisfaction of the Project Manager, including, but not limited to:

a. Physical breakdown of the Project including estimated starting and completion dates of activities.

b. Float Time.

c. Contract milestones and completion dates, building occupancy date, constraints, restraints, sequences of Work shown in the Contract, the maintenance period and the final completion date. Durations shall be in calendar day.

d. Type of Work to be performed, and the sequences.

e. Purchases, submittals, submittal reviews, manufacturing, tests, delivery, and installation activities for all major materials and equipment.

f. Deliveries of City furnished equipment and/or materials in accordance with the dates or schedule windows of such items set forth in the Contractor furnished by the Project Manager, or items to be salvaged and delivered to the City.

g. Preparation, submittal and approval of Shop Drawings and material samples showing a thirty (30) day minimum time specified for the Project Manager's review of normal or routine submittals. A forty (40) day review time for all major submittals and the same time frame shall be allowed for at least one (1) re-submittal on all major submittals.

h. Impact of Change Orders issued to the Contract.

i. Approvals required by regulatory agencies or other third parties.

j. Plans for all subcontract Work.

k. Access to and availability of Work areas including all anticipated shutdowns.

l. Identification of linkage between preceding, concurrent and follow-on Sub- contractors and utilities that are shown on the Plans or called out in the Specifications.

m. Actual tests, submission of test reports, and approval of test results.

n. Training and classes required under the Contract.

o. Pre-Final and Final Inspection punch lists and final cleanup, allow time for preparation of the punch lists.

p. Clearly identify any manpower, material, or equipment restrictions, as well as any activity requiring unusual shift Work, specified overtime, or Work at times other than regular days or hours.

3. Durations of the labor, equipment, and materials required to perform each activity shall be based on a normal work day unless otherwise approved by the Project Manager.

4. Critical or near critical paths resulting from the use of manpower or equipment restraints shall be kept to a minimum. Near critical paths shall be defined as those paths having fifteen (15) working days or less of total float as shown on the accepted Baseline Schedule.

5. Time scale shall show a continuous flow of information from left to right. The critical path shall be clearly and graphically identified on the schedule.

J. SCHEDULE REPORTS

1. The Schedule submitted to the Project Manager shall include the time scaled network diagram. Network diagrams shall be based on early start and early finish dates of activities shown and any related calculations generated by the scheduling program which describes the events and activities depicted.

K. APPROVAL OF BASELINE SCHEDULE

1. Acceptance Process:

2. The Project Manager will accept or reject, in writing, the Contractor's submission within fourteen (14) days after receipt of required information. The Construction Schedule, once accepted, becomes the Baseline Schedule which shall be used for monitoring and evaluating all facets of Contract performance, including, but not limited to: payment progress, changes, and delays.

3. Revise the Schedule, periodically per B, F, G, and H of this Article.

L. REVISIONS TO ACCEPTED BASELINE SCHEDULE

1. No change to the accepted Baseline Schedule shall be made without the prior written approval of the Project Manager.

M. UPDATES TO ACCEPTED BASELINE SCHEDULE AND PROGRESS PAYMENTS

1. Updated Schedules or UPRS:

a. See Section F of this Article.

b. The Update Report shall show the activities or portions of activities completed during the reporting period and their total value as the basis for the Contractor's monthly request for payment. Payments made pursuant to Partial Payments of these General Requirements will be based on the total value of such activities completed or partially completed after verification by the Inspector. The report shall state the percentage of the Work actually complete as of the report date.

N. RESPONSIBILITY FOR COMPLETION

1. Whenever it becomes apparent from the Updated Schedule or UPRS that phasing, milestone, constraint, restraint, or Contract completion dates will not be met, the Contractor shall execute some or all of the following remedial actions:

a. Increase construction manpower in such quantities and crafts as necessary to eliminate the backlog of Work.

b. Increase the number of working hours per shift, shifts per working day, working days per week, the amount of construction equipment, or any combination of the foregoing to eliminate the backlog or Work. Contractor shall be responsible for all additional costs associated in having the Inspector present at the job site for all periods in excess of the basic work day.

c. Reschedule the Work in conformance with the Specification requirements.

2. Before implementing any of the above actions, the Contractor shall notify and obtain written approval from the Project Manager.

3. Under no circumstances will the addition of equipment or construction forces, increasing the working hours or any other method, manner, or procedure to return to the contractually required completion date be considered justification for a Change Order or be treated as acceleration where the need for a UPRS has been caused by the Contractor and/or its Subcontractors or Suppliers, at any tier.

4. The Project Manager may elect to withhold progress payments until the Contractor's progress indicates that the milestone date(s) and/or the Contract completion date will be met.

19. WORK BY CITY OR OTHERS

A. Be responsible for ascertaining the nature and extent of any simultaneous, collateral and essential work by others. The CITY, its employees and contractors, and others, shall have the right to operate within or adjacent to the worksite to perform such Work.

B. The CITY, the CONTRACTOR, and each of such employees, contractors and others, shall coordinate their operations and cooperate to hold interference to a minimum.

C. Include in its Bid all costs involved as a result of coordinating its Work with others. The CONTRACTOR shall not be entitled to additional compensation from the CITY for damages resulting from such simultaneous, collateral and essential Work. The CONTRACTOR's coordinating efforts shall include redeployment of his Work forces to other parts of the Work.

PAYMENT FOR WORK

20. PARTIAL PAYMENTS (Revised as of 02/12/16)

A. Unless otherwise prescribed by law, three (3) working days prior to the last work day of each month, or other such date mutually agreed upon by the CONTRACTOR and the INSPECTOR, the CONTRACTOR shall prepare and submit to the INSPECTOR, an estimate of the cumulative amount and value of acceptable Work performed by the CONTRACTOR at the jobsite up to that date. Said amount shall also include the value of all acceptable materials and equipment for the Contract that have been delivered and suitably stored but not yet used in the Work, subject to the requirements of PAYMENTS FOR MATERIALS OR EQUIPMENT DELIVERED AND STORED ON THE JOBSITE and PAYMENT FOR MATERIALS OR EQUIPMENT STORED OFF THE JOBSITE of these General Requirements.

B. Payments for undelivered, specifically manufactured equipment to be incorporated into the Work, excluding "off the shelf " or catalog items, will be made when all of the following conditions exist:

1. The equipment must be specifically designated in the Technical Specifications for partial payment prior to delivery.
2. The equipment to be specifically manufactured for the Project could neither be readily utilized on nor diverted to another job, and,
3. A fabrication period of more than six (6) months is anticipated,

C. Upon verification and approval by the INSPECTOR, such estimate shall be processed by the INSPECTOR in accordance with the provisions of the California Public Contracts Code.

D. The CITY may retain a portion of the amount otherwise due to the CONTRACTOR, as follows:

1. Retention of **five percent (5%)** will be held on the original Contract value on each approved payment claim until the amount paid of the original Contract equals fifty percent (50%). The CITY may then, at its sole discretion discontinue further retention on the original Contract value for all subsequently approved payment claims.
2. At any time during the course of the Contract, the CITY may, at its sole discretion, reinstate the **five percent (5%)** retention.
3. Additional deductions will be made from each monthly payment request for amounts due the CITY as follows:
    a. Equipment or materials furnished by the CITY.
    b. Services rendered to the CONTRACTOR by the CITY.
    c. Amounts due the CITY for liquidated damages or penalties under the terms of the Contract.
    d. Amounts required to be deducted by federal, state, or local governmental authority or other provisions of these Contract Documents.

E. From the balance thus determined will be deducted the amount of all previous payments, and the remainder shall constitute the monthly payment due the CONTRACTOR. Within thirty (30) calendar days after receipt of the INSPECTOR's recommendation by the Department of the monthly payment due the CONTRACTOR and subject to the deductions provided, herein, the CITY will pay the amount found due.

F. On lump-sum items the INSPECTOR's estimate of the monthly payment due the CONTRACTOR will not be required to be made by strict measurement, and an approximate estimate will suffice.

G. The monthly payments may be withheld or reduced, for the following reasons:

1. If the CONTRACTOR is not diligently or efficiently complying with the express intent of the Contract.
2. If there are unresolved Notices of Non-Compliance.
3. If Technical Manuals are not submitted.
4. If Record Drawings are not kept up-to-date.
5. If progress photographs are not submitted, and
6. If construction schedules are not submitted in accordance with these General Requirements.
7. The CONTRACTOR shall promptly submit the following in response to requests by the INSPECTOR:
8. Information and records necessary to determine the cost of the Work for purposes of estimating monthly payment.
9. Itemized statements, in a form satisfactory to the INSPECTOR, of the actual cost of all acceptable materials delivered by the CONTRACTOR to the site.

H. The making of any payment to the CONTRACTOR shall not relieve the CONTRACTOR from contractual obligations. These payments shall not be construed as the transfer of ownership of any equipment or materials to the CITY.

I. Responsibility of ownership shall remain with the CONTRACTOR who shall be obligated to store, protect, repair, replace, rebuild or otherwise restore any fully or partially completed Work or structure for which payment has been made. The CONTRACTOR shall replace any materials or equipment required to be provided under the Contract that may be damaged, lost, stolen, or otherwise degraded in any way prior to acceptance of the Work under the Contract.

J. At its own expense, the CONTRACTOR has the option, to substitute for any money being withheld by the CITY, securities equivalent to the amount being withheld. Securities eligible for such substitution are bank or savings and loans certificates of deposit or such securities eligible for investment pursuant to California Government Code. Any such security or securities so substituted for monies withheld, shall be owned by the CONTRACTOR who shall receive earned interest.

K. Such security shall, at the request and expense of the CONTRACTOR, be deposited with CITY or with a State or Federally Chartered Bank as the escrow agent who shall pay such monies to the CONTRACTOR upon notification by the CITY that payment can be made. Such notification will be given at the expiration of sixty (60) calendar days from the date of acceptance of the Work by the Board, or as prescribed by law, provided, however, that there will be a continued retention of necessary securities to cover such amounts as are required by law to be withheld by properly executed and filed notices to stop payment, or as may be authorized by the Contract to be further retained.

L. Any escrow agreement entered into pursuant to this provision shall contain as a minimum, the following provisions - the amount of securities to be deposited; the terms and conditions of conversion to cash in case of the default of the CONTRACTOR; and the termination of the escrow upon completion of the Contract and the other requirements as herein above provided.

21. PAYMENT FOR MOBILIZATION

A. General Mobilization

1. Payment for general mobilization shall be limited to those items of Work described in MOBILIZATION, of these General Requirements.
2. The CONTRACTOR shall submit to the PROJECT MANAGER for approval a breakdown of the amount established for mobilization. The payment for each item of mobilization will be made when

that item of mobilization has been completed and as specified below:

3. When the monthly partial payment estimate of the amount earned, not including the amount earned for mobilization, is five percent (5%) or more of the original Contract amount, the total amount earned for mobilization may be up to fifty percent (50%) of the Contract item price for mobilization or five percent (5%) of the original Contract amount, whichever is less will be included in the said estimate for payment.

4. When the monthly partial payment estimate of the amount earned, not including the amount earned for mobilization, is ten percent (10%) or more of the original Contract amount, the total amount earned for mobilization may be up to seventy-five (75%) of the Contract item price for mobilization or seven point five percent (7.5%) of the original Contract amount, whichever is less will be included in the said estimate for payment.

5. When the monthly partial payment estimate of the amount earned, not including the amount earned for mobilization, is twenty percent (20%) or more of the original Contract amount, the total amount earned for mobilization may be up to ninety-five percent (95%) of the Contract item price for mobilization or nine point five percent (9.5%) of the original Contract amount, whichever is less will be included in the said estimate for payment.

6. When the monthly partial payment estimate of the amount earned, not including the amount earned for mobilization, is fifty percent (50%) or more of the original Contract amount, the total amount earned for mobilization may be up to one hundred percent (100%) of the Contract item price for mobilization or ten percent (10%) of the original Contract amount, whichever is less will be included in the said estimate for payment.

7. After acceptance of the Contract by the BOARD, the amount, if any, of the Contract item price for mobilization in excess of ten percent (10%) of the original Contract amount will be included for payment in the final monthly payment.

8. The Contract lump sum price paid for mobilization shall include full compensation for furnishing all labor, materials, tools, equipment, and incidentals, and for doing all the Work involved in mobilization as specified herein.

9. The adjustment provisions in PAYMENT FOR CHANGES AND EXTRA WORK of these General Requirements, and the retention of funds provisions of PARTIAL PAYMENTS of these General Requirements shall not apply to the Contract lump sum item for Mobilization.

10. When other Contract items are adjusted as provided in PAYMENT FOR CHANGES AND EXTRA WORK of these General Requirements, if the costs applicable to such item of Work include mobilization costs, such mobilization costs will be deemed to have been recovered by the CONTRACTOR by the payments made for mobilization and will be excluded from consideration in determining compensation under said Article.

11. When the Contract does not include a Contract pay item for mobilization as specified above, full compensation for any necessary mobilization required shall be considered as included in the prices paid for the various Contract items of Work involved and no additional compensation will be allowed.

22. PAY ITEM DEFINITIONS

This Article describes methods of measurement and payment for lump sum and unit priced items listed on the Schedule of Work and Prices, contained in the Contract Proposal.

A. The Contractor shall not take advantage of any apparent error or omission on the Drawings or Specifications, and the PROJECT MANAGER shall be permitted to make corrections and interpretations as may be deemed necessary for fulfillment of the intent of the Contract Documents.

B. All portions of the Work are either in an applicable allowance, lump sum, or unit price item listed on the schedule of Work and Prices. Work for which there is not a separate item will be considered incidental to

the contract and no additional compensation shall be allowed.

C. ALLOWANCES

1. Fixed allowances may have been allocated to the Schedule of Work and Prices for certain items of work. Requirements for each Allowance Item are specified below or a reference is given to the General Requirements article that describes the work. Allowance item work is to be performed only as directed by the PROJECT MANAGER. Unless otherwise noted, Allowances will be paid on a time and materials basis in accordance with Section C, PARTIAL PAYMENTS of these General Requirements.

2. If allowance items are not executed or are only partially executed or the allowance for any item is not expended or partially expended, then a deductive change order shall be issued for the amount that is not expended. If, however, these items are over expended then an appropriate change order shall be executed in accordance with, PAYMENT FOR CHANGES AND EXTRA WORK, of these General Requirements.

D. LUMP SUM ITEMS:

1. Payment of the lump sum items established in the contractor's Bid under the various line items in the Bid Form shall be full compensation for all labor, materials, and equipment required to furnish, install, construct, and test the Work covered under the lump sum bid item.

2. Payment for the lump sum items established in the Contractor's Bid shall also fully compensate the Contractor for any other work which is not specified or shown, but which is necessary to complete the Work.

3. Payments for Lump Sum Work other than Mobilization will be based upon physical progress for each activity in accordance with the breakdown of the Lump Sum prices agreed to in the Schedule of Values.

E. UNIT PRICE ITEMS:

1. Payment for all work shall be in accordance with the unit price bid items in the schedule of Work and Prices and shall be full compensation for all labor, materials, and equipment required to furnish, install, construct and test the Work covered under the unit price bid item. Work for which there is not a price schedule item will be considered incidental to the Work and no additional compensation shall be allowed.

2. Payment will be made only for the actual quantities of work performed in compliance with the Drawings and Specifications. The Contractor will receive reimbursement equal to the approved quantity times applicable unit price.

23. SCHEDULE OF VALUES

A. The Schedule of Values will be used as a basis for determining progress payments on a lump sum Contract or any designated lump sum bid item. The Schedule of Values shall be a schedule of cost loaded construction activities equal, in total, to the lump sum bid and shall be in such form and sufficient detail to correctly represent a reasonable apportionment of the lump sum. Prior to submitting an invoice for payment, the CONTRACTOR shall have submitted a detailed Schedule of Values and obtained approval from the PROJECT MANAGER.

B. Each lump sum bid item on the Schedule of Work and Prices as set forth in the Bid must be broken down separately. The breakdown of each lump sum bid item must cover the cost of construction required by the plans and specifications for that item. The sum of the values for the construction activities, within a bid item must equal the total amount bid for that item.

C. Each activity in the Schedule of Values shall delineate one construction activity. For example, the placement of concrete between construction joints, the construction of an electrical duct bank or pipeline between points A & B. The costing for each activity should include all costs for the labor and materials or

equipment required to complete the activity. For example, concrete construction activities should include all costs for the forming, placing of reinforcement, placing concrete and curing. The cost for pipeline construction activities should include materials, equipment and installation including pipeline supports or thrust blocks. The excavation and backfill for a pipeline or structure may be separate activities. No non-construction activity shall be cost loaded.

24. NOTICE TO WITHHOLD AND/OR STOP NOTICE

A. When a "Notice to Withhold" or "Stop Notice" is served upon the CITY, or the BOARD, pursuant to the lien statutes of the State of California, to withhold sufficient funds from payments to the CONTRACTOR in support of a claim resulting from default by the CONTRACTOR in payment for labor or materials used in prosecution of the Contract, the CITY shall withhold from payment due the CONTRACTOR an amount of money equal to the amount of the claim stated in the "Notice to Withhold" or "Stop Notice," and an additional amount equal to twenty-five percent (25%) of the amount of said claim, to defray the costs of litigation in the event of court action on the claim, for a total withholding of one and one quarter times the stated amount of the claim. At the discretion of the CITY, the CITY may allow the CONTRACTOR to file with the CITY the bond referred to in the Civil Code of the State of California after which said monies will not be withheld on account of such "Notice to Withhold" or "Stop Notice."

B. In the event the Contract is terminated for CONTRACTOR default, any funds due the CONTRACTOR and retained by the CITY in accordance with PARTIAL PAYMENTS of these General Requirements, shall become the property of the CITY to the extent necessary to repay to the CITY any excess in the Contract price above the cost of the Work completed at the time of termination. After issuance of notice to discontinue Work, no further payments will be made to the CONTRACTOR for the Work covered by the notice until completion of Work and final settlement has been made.

25. FINAL PAYMENT

A. Final payment to the CONTRACTOR is made following action by the BOARD that formally adopts the recommendation of the PROJECT MANAGER to accept the Contract.

B. After acceptance of the Work by the BOARD and not more than sixty (60) calendar days after filing Notice of Completion, the CITY will make final payment to the CONTRACTOR of the amount remaining after deducting all prior payments and all amounts to be kept or retained under the provisions of the Contract, including the following items:

1. Liquidated damages, as applicable;
2. Lien claims or Stop Notices filed on behalf of suppliers, Subcontractors, and labor performed in connection with the Project; except, that upon submittal of a Stop Notice Release Bond issued by an approved Surety Company executed in favor of the CONTRACTOR, the CITY will release such portion of the retainage funds to said CONTRACTOR that is being held solely to cover Stop Notice Claims.
3. No claim of the CONTRACTOR under this Article shall be allowed unless the CONTRACTOR has given the required written notice. Nor shall a claim by the CONTRACTOR for an equitable adjustment hereunder be allowed if asserted after final payment under this Contract.

26. CHANGE ORDER REQUESTS

A. The CONTRACTOR's quotations for preliminary change orders for extras, changes, additions, or deletions to the Work as described in Article 52 CHANGES AND EXTRA WORK of the General Conditions shall be submitted to the PROJECT MANAGER, in writing, on the Change Order Cost Quotation Form provided by the PROJECT MANAGER, and in conformance with the requirements of PAYMENT FOR CHANGES AND EXTRA WORK of these General Requirements. Examples of these forms are bound at the end of these General Requirements. The quotation shall be firm for a period of not less than sixty (60) calendar days from the date of receipt of the quotation by the PROJECT MANAGER. Submit its written cost quotation and Time Impact Analysis not later than two (2) weeks after being requested to provide such quotation, unless the PROJECT MANAGER allows more time. Delays in

submitting quotations beyond the two (2) weeks set forth herein, which cause a delay in the issuance of a Change Order or a delay to the completion date of the Project, shall not be cause for a claim or a time extension under the Contract.

B. The PROJECT MANAGER's request for quotation on a preliminary change shall not be considered authorization to proceed with the changed Work prior to the issuance of a formal Change Order, unless directed otherwise in writing by the PROJECT MANAGER, nor shall such request constitute justification for a delay to the existing Work or a time extension under the Contract.

27. PAYMENT FOR CHANGES AND EXTRA WORK

Payment to the CONTRACTOR, or credit to the CITY, for any extra, change addition or deletion to the Work under the Contract, or settlement of any claim under the Contract, covered by any Change Order, shall be determined by the methods set forth herein. The PROJECT MANAGER may change the plans and specifications, character of the Work, or quantity of Work provided the total arithmetic dollar value of all such changes, both additive and deductive, does not exceed twenty-five percent (25%) of the Contract price. Should it become necessary to exceed this limitation, the change shall be by written Supplemental Agreement between the CONTRACTOR and the CITY, which shall be executed by a Change Order.

A. LUMP SUM

A total sum for the changed Work may be mutually determined by the PROJECT MANAGER and the CONTRACTOR. The CONTRACTOR shall furnish a breakdown of the costs satisfactory to the PROJECT MANAGER, of the proposed lump sum, in complete accordance with C through J of this Article. Such lump sum costs shall be full and final compensation as described in D of this Article. All cost proposals for lump sum Change Orders shall be presented in accordance with C through J of this Article.

B. COST REIMBURSEMENT (TIME AND MATERIALS) WORK

The costs of all changed Work submitted under the cost reimbursement (time and materials) method shall be formulated in accordance with the provisions of C through J of this Article.

Additionally, if the method or amount of payment cannot be agreed upon prior to the beginning of the Work, the PROJECT MANAGER may issue a unilateral Change Order in the amount determined reasonable by the PROJECT MANAGER for the changed Work and direct the CONTRACTOR to proceed with the changed Work or the PROJECT MANAGER may direct in writing that the Work be done on a cost reimbursement (time and materials) basis, and the CONTRACTOR shall provide all labor, equipment, and materials necessary to complete the Work in a satisfactory manner and within a reasonable period of time. For Work performed, payment shall be made for the documented actual cost, in accordance with the following provisions.

1. Labor, up to and including general foremen, who are directly assigned to the changed Work. Employees identified as superintendents shall not be charged as labor on changed Work, but shall be covered under overhead costs. These costs shall include actual documented payroll costs including wages, payroll taxes as established by law (i.e., FICA, Federal and State Unemployment Taxes), fringe benefits as established by negotiated labor agreements, and any insurance costs (such as Worker's Compensation and General Liability Insurance but shall not include Automobile Liability Insurance, OCIP coverage, or any other insurance costs which are provided for in B.6 below which are currently assessed against labor costs. A detailed breakdown of the subcomponents of labor costs, by all crafts shall be submitted to the PROJECT MANAGER, by the CONTRACTOR and all SUBCONTRACTORS, for approval, as part of the documentation of labor costs, within forty-five (45) days after issuance of the Notice to Proceed. No other subcomponents of labor costs shall be considered, unless approved in writing by the PROJECT MANAGER.

2. Materials - The cost of materials used in performing the changed Work will be the cost, including sales tax, to the purchaser, whether CONTRACTOR, Subcontractor or other forces, from the supplier thereof, except as the following are applicable:

a. Cash or trade discounts available to the purchaser shall be credited to the CITY notwithstanding the fact that such discounts may not have been taken by the CONTRACTOR.

b. For materials secured by other than a direct purchase and direct billing to the purchaser, the cost will be deemed to be the price paid to the actual supplier as determined by the PROJECT MANAGER. Markup, except for actual costs incurred in the handling of such materials, will not be allowed.

c. Payment for materials from sources owned wholly or in part by the purchaser shall not exceed the price paid by the purchaser for similar materials from said sources on Contract items or the current wholesale price for such materials delivered to the job site, whichever price is lower.

d. If, in the opinion of the PROJECT MANAGER, the cost of materials is excessive, or the CONTRACTOR does not furnish satisfactory evidence of the cost of such materials, then the cost shall be deemed to be the lowest current wholesale price for the quantity concerned, delivered to the job site less cash or trade discount. The CITY reserves the right to furnish materials for the Work and no claim shall be made by the CONTRACTOR for costs and profit on such materials.

e. For the purposes of this Article, a "Supplier" is defined as any person or persons, firm or business, who supplies materials, of construction and/or permanent equipment, but who does not perform any portion of the Work of the Contract on site, for the CONTRACTOR, except that labor or labor supervision which may be required by some manufacturers as part of their equipment installation for warranty or other purposes.

3. EQUIPMENT COSTS, including ownership, lease or rental costs, as well as operating costs, for individual equipment units whose replacement value is in excess of $1,000. Transportation and set up costs shall be included, but only if the equipment is imported to the worksite solely to perform Work on the changed Work included in the Change Order and the CONTRACTOR can demonstrate that the changed Work cannot or could not be performed economically with equipment already at the site. Equipment costs shall be determined in accordance with the requirements set forth in H of this Article.

4. SUBCONTRACTOR COSTS, provided that such costs are direct costs to the CONTRACTOR for performing the changed Work as set forth in E of this Article.

5. BOND COSTS on the incremental change in the value of the Contract shall be determined and paid for as set forth in I.1 of this Article.

6. INSURANCE COSTS (other than labor insurance or OCIP coverage) shall be determined and paid for as set forth in I.2 of this Article.

C. GENERAL

1. It is the intent of the CITY to settle all Change Orders full and final at the time the Change Order is issued. Therefore, the following paragraph will be incorporated, in writing, on all Change Orders.

> "The compensation (time and cost) set forth in a Change Order comprises the total compensation due the CONTRACTOR, all Subcontractors, and all Suppliers, for the Work or change defined in the Change Order, including impact on unchanged Work. By signing the Change Order, the CONTRACTOR acknowledges and agrees on its behalf and on the behalf of all Subcontractors, and all Suppliers, that the stipulated compensation includes payment for all Work contained in the Change Order, plus all payment for the interruption of schedules, extended field overhead costs, delay, and all impact, ripple effect or cumulative impact on all other Work under this Contract. The signing of the Change Order indicates that the Change Order constitutes full mutual accord and satisfaction for the change, and that the time and/or cost under

the Change Order constitutes the total adjustment to price or time or performance owed the CONTRACTOR, all Subcontractors, and all Suppliers as a result of the change. The CONTRACTOR, on behalf of himself, all Subcontractors, and all Suppliers, agrees to waive all rights, without exception or reservation of any kind whatsoever, to file any further claim related to this Change Order. No further claim or request for adjustment of any type, excepting only bond and insurance cost as set forth in these General Requirements of the Contract Documents for any reasonably foreseeable cause shall arise out of or as a result of this Change Order or the impact of this Change Order on the remainder of the Work under this Contract."

2. Costs which shall not be paid in Change Orders under this Contract include, but are not limited to, interest costs of any type; claim preparation or filing costs; legal expenses; the costs of preparing or reviewing proposed Change Orders or Change Order proposals; lost revenue; lost profits; lost income or earnings; rescheduling costs; costs of idled equipment when such equipment is not at the site or has not yet been employed on the Work; lost earnings or interest on unpaid retainage; claims consulting costs; and the costs of corporate officer or staff visiting the site; any compensation due to the fluctuation of foreign currency conversion or exchange rates; loss of other business; changes in taxes or increased tax rates of any kind or any costs identified as unallowable under the provisions of the Federal Acquisition Regulations.

3. Extensions of time shall be based solely upon the effect of delays to the Work as a whole. Extensions of time shall not be granted for delays to the Work, unless the CONTRACTOR can clearly demonstrate, through analysis of the current updated schedule, that the delay to the Work as a whole arose or will arise from causes other than normal weather, beyond the control and without fault or negligence of the CONTRACTOR, or any Subcontractor, at any tier, and that such delays did or will, in fact, delay the progress of the Work as a whole. The CONTRACTOR shall not be entitled to a time extension unless it submits a Time Impact Analysis which is a calculation of the extent of the delay to the end date of the Work and which shows that the Work has been or will be extended beyond the current Contract completion date. A Time Impact Analysis is an estimating procedure which utilizes the networking techniques (fragnets) and a written analysis of the facts associated with the alleged delay to demonstrate the effect of the alleged delay on the critical path of the schedule. A "fragnet" is defined as a sequence of new activities and/or activity revisions that are proposed to be added to the existing current updated schedule to demonstrate (mathematically and graphically) the influence of the alleged delay on the end date of the Work and shall be the sole method for incorporating delays and impacts into the schedule. The objective of a Time Impact Analysis is to pinpoint, isolate, and quantify all time impact associated with a specific issue and determine its time relationship to past or current delays. Time extensions shall not be allowed for delays to parts of the Work that are not on the critical path of the currently approved monthly updated Project Schedule. Time extensions shall not be granted, nor delay damages of any kind whatsoever paid to the CONTRACTOR, until all available float, slack, or contingency time on the Project is used and the end date of the Work is moved beyond the current, adjusted Contract completion date.

4. The CONTRACTOR'S Cost Breakdowns submitted under the lump sum method described in paragraph A and its Change Order Quotations submitted under the cost reimbursement (time and materials) method described in paragraph B (including without limitation requests for cost reimbursement for delay, disruption, hindrance and interference associated with extras, changes, additions or deletions) shall be itemized in a manner that, with mathematical certainty and without reliance upon probabilities or inferences, segregates the direct, actual reimbursable costs associated with each individual extra, change, addition, deletion and (on an event-by-event basis) each individual delay or disruption event. Such Change Order Cost Quotations shall not be based, in whole or in part, upon any methodology (such as "total cost" or "modified total cost" methodologies) that purports to calculate the CONTRACTOR'S additional costs of performance of the extra, change, addition or deletion (including without limitation the additional costs of delay, disruption or other impact) based on the difference between CONTRACTOR'S total actual Project

or line item costs (with or without fee) and its original bid estimate for the Project or any original bid estimate line item. In connection with the foregoing, CONTRACTOR represents and warrants that it has the ability to generate and maintain complete and accurate cost accounting records that will reflect:

a. The actual costs incurred or saved for each individual item of extra work, change, addition, deletion (including without limitation any costs of associated delay, disruption, interference, hindrance and the cumulative impact of each extra, change, addition, deletion on other parts of the Work); and,

b. On an event-by-event basis, the effect of each delay or disruption that forms the basis of each request for extension of time, regardless of their scope, number, complexity, cumulative effect, or time of issuance or occurrence.

5. Except as provided in Article 51, COMPENSATION FOR DELAY, DISRUPTION, UNANTICIPATED OVERHEAD of the General Conditions, CONTRACTOR shall have no right to recovery of any compensation, costs, expenses or damages resulting from delay, disruption, interference, or hindrance in the performance of the Work (including without limitation interruption of schedules, excess or extraordinary extended field and indirect overhead costs, loss of productivity and the impact, ripple or cumulative effect on other Work).

6. CONTRACTOR waives any claim or rights and remedies based on abandonment, quantum merit, rescission or other similar legal theory by reason of any of the following circumstances, which the CONTRACTOR acknowledges and agrees are within the reasonable contemplation of the parties:

a. Extras, changes, additions and deletions to the Work after execution of the CONTRACT and issued from time to time throughout the period of construction, regardless of their scope, number, cumulative value, or complexity, to correct errors, omissions, conflicts, and ambiguities in the Contract Documents, or to implement discretionary changes the scope of Work requested by the CITY;

b. The issuance and performance of extras, changes, additions and deletions in a manner that is not in sequence with the as-built or as-planned progress of the Work;

c. Changes due to Differing Site Conditions;

d. Suspensions of the Work or parts thereof, or limitations on access to portions or all of the Work, for the convenience of CITY or in the interests of the Project;

e. Delay or disruption to the Work due to failure of the CITY, PROJECT MANAGER or INSPECTOR to timely perform any contractual obligation.

D. OVERHEAD COSTS

To the costs under Paragraphs C.1., C.2., and C.3., above, an added fixed fee to provide compensation for all overhead costs shall be allowed as established in Paragraph E.1 below. This overhead rate is not applicable to the costs under Paragraphs C.4. through C.6. above.

The overhead rates determined in Paragraphs 1 and 2 below shall be applied to all additive and deductive Change Orders, of this Article.

1. GENERAL AND ADMINISTRATIVE OVERHEAD RATE:

a. An allowance of eight percent (8%) for overhead costs will be allowed to the CONTRACTOR, only when CONTRACTOR uses its own organization to perform a part of the Work under the Change Order based upon the value of labor, material and construction equipment required to accomplish said part of the change Paragraphs C.1., C.2., and C.3.

b. An allowance of twelve percent (12%) for overhead costs will be allowed to the Subcontractors (at any tier), only when Subcontractors use their own organization to perform a part of the Work under the Change Order, based upon the value of labor,

material, and construction equipment required to accomplish said part of the change Paragraphs C.1., C.2.,and C.3.

c. Overhead percentages shall be considered to include all insurance costs other than specifically mentioned in this Article, all field and office supervisors and assistants, all onsite project administration, security costs, the cost of small tools and consumables, incidental job burdens, and all general home office expenses and no separate allowance will be made therefore. Assistants to field and office supervisors include all clerical, stenographic, and general office help. Incidental job burdens include, but are not necessarily limited to, office equipment and supplies, temporary toilets, telephone and conformance to OSHA requirements. Items such as, but not necessarily limited to, review and coordination, estimating, PROJECT MANAGER, scheduling, and expediting relative to Change Orders, and updating and furnishing Record Drawings to incorporate changes, are associated with field and office supervision and are considered to be included in the CONTRACTOR's overhead percentage set forth herein.

d. For those Change Orders with both additive and deductive costs, the overhead rate shall be determined by the net amount of the additive and deductive work.

E. SUBCONTRACTOR COSTS

1. Where Work under the Change Order is performed in whole or in part by a Subcontractor, at any tier, the cost of the Change Order shall include the cost to the Subcontractor. Subcontractor's costs shall be presented in strict accordance with A., B., and C., above, and D. through J. as applicable.

2. An additional fixed fee of six percent (6%) based upon the sum of the costs of all Subcontractors, at any tier, involved in the Work of the Change Order, shall be allowed to the CONTRACTOR for profit and General and Administrative Overhead Costs. An additional fixed fee of six percent (6%) shall be allowed to first tier Subcontractors for profit and General and Administrative Overhead costs for any Work involved in the Change Order that is performed by Sub-subcontractors. No additional fixed fee shall be allowed for Change Order Work performed by Subcontractors to Sub-subcontractors, at any tier.

F. PROFIT

To the costs of C.1., C.2., and C.3., above, plus applicable overhead costs from D.1.a. or D.2.b., if a SUBCONTRACTOR at any tier above, an added fixed fee for Profit shall be allowed as established herein.

1. An allowance of ten percent (10%) for Profit for the party performing the Work under the Change Order, shall be included on all Change Orders that are negotiated full and final in advance of any changed Work being performed.

2. An allowance of five percent (5%) for Profit for the party performing the Work under the Change Order shall be included on all Change Orders where any portion of the Work is performed before the Change Order is executed full and final by both the PROJECT MANAGER and the CONTRACTOR.

3. No added fixed fee for Profit shall be allowed for any cost other than those costs under C.1., C.2., and C.3., of this Article, if Subcontractor at any tier above. No fixed fee for profit shall be allowed on the costs of C.4., C.5., C.6., or F of this Article.

4. On Change Orders with both additive and deductive cost components, the profit allowance on net additive Change Orders shall be based on the Change Order amount after overhead rates have been added. The profit allowance shall be as set forth in Paragraphs 1 and 2 above as applicable. No profit allowance shall be included for net deductive Change Orders.

G. CITY FURNISHED MATERIALS AND EQUIPMENT

The CITY reserves the right to furnish such materials and equipment as it deems expedient, and the CONTRACTOR shall have no claim for profit or overhead on the cost of such materials and equipment.

H. EQUIPMENT COSTS

Full rental costs for rental or leased equipment shall not exceed the rates as set forth in the Rental Rate Blue Book (the Blue Book) published by Dataquest, Inc., Palo Alto, California, as adjusted to the regional area of the Work under this Contract. Owned equipment costs shall not exceed the rates listed in the Cost Reference Guide (the CRG) for Construction Equipment, published by Dataquest, Inc., Palo Alto, California. The most recent published edition in effect at the commencement of actual equipment use shall be used.

1. RENTED OR LEASED EQUIPMENT

a. For equipment rented or leased (including lease with purchase option) in arm's length transactions from outside vendors, the CONTRACTOR shall be paid the actual invoiced, rented or leased rates provided that the invoiced lease or rental rates do not exceed the rates set forth in the Blue Book. Arm's length rental or lease transactions are those in which the firm involved in rental or lease of such equipment is not associated with, owned by, have common management, directorship, facilities, or stockholders with the firm renting the equipment. Submittal by a CONTRACTOR of a rental or leased invoice from the lessor will be prima facie proof of compliance with the above. However, such invoices are not conclusive proof; if questioned, the burden of proof remains with the CONTRACTOR. In no event shall the leased equipment rate billed to the CITY be at rates exceeding those prescribed in the following table:

Actual Usage (Change Order & Contract Work Combined	Blue Book Payment Category
Less than 8 hours	Hourly Rate
8 or more hours but less than 7 days	Daily Rate
7 or more days but less than 30 days	Weekly Rate
30 calendar days or more	Monthly Rate

b. When in Use:

Actual equipment use time documented by the INSPECTOR or PROJECT MANAGER shall be the basis that the equipment was utilized on the changed Work and paid for under the Change Order. In addition to the lease or rental rate, equipment operating costs shall not exceed the estimated hourly operating rate as set forth in the Blue Book. The hours of operation shall be based upon actual equipment usage on the changed Work as recorded by the INSPECTOR or PROJECT MANAGER. For multiple shift Work sequences, the allowable equipment rate shall not exceed fifty percent (50%) of the base rate, for second or third shifts.

c. When Idle:

Idle equipment is equipment on site and necessary to perform the Work under the change but not in actual use due solely to the impact of the changed Work. Equipment operating costs due to idle time, documented by the INSPECTOR or PROJECT MANAGER, shall be paid at the rate determined in Paragraph I above. Idle time shall include a reasonable time allowance to and from the Project site.

2. OWNED AND OTHER EQUIPMENT

a. Equipment rates for owned equipment or equipment provided in other than arm's length transactions will not exceed the total hourly costs as set forth in the Cost Reference Guide.

Adjustments to the listed rates provided for under the section of the Cost Reference entitled "Cost and Production Formulas" shall not be allowed. Except as noted herein below, this equipment hourly rate plus the estimated operating cost per hour from the Cost Reference Guide will be paid for each hour the equipment actually performs Work on the changed Work. Daily records listing the equipment units and their respective operators, identification code, and actual usage on the Work under the Change Order, as certified at the end of each Work day (or work shift if the Work is being performed in multiple work shift sequence) by the INSPECTOR or PROJECT MANAGER shall be the record upon which actual equipment use shall be based. For multiple shift Work sequences, the allowable equipment rate shall not exceed the hourly depreciation and operating costs listed in the Cost Reference Guide, for second or third shifts. It is agreed that this rate shall represent payment in full for all the CONTRACTOR's direct costs.

b. When Idle:

Equipment necessary to be on the site to complete the Work, but not in actual use due solely to the impact of the changed Work, shall not exceed fifty percent (50%) of the hourly rates identified in the "Ownership" column under the heading "Hourly Operating and Overhaul Expenses" set forth in the Cost Reference Guide, provided that its presence and necessity on the site has been documented by the INSPECTOR or PROJECT MANAGER, and further provided that the equipment was idled solely by actions of the CITY. Idle equipment time will only be paid as a function of delays specifically directed or caused by the CITY's actions. In no event shall the idle time claimed in a day for a particular piece of equipment exceed the normal Work schedule established for the Project - usually eight (8) hours per day or forty (40) hours per week, and excluding Saturdays, Sundays, and holidays. For multiple shift Work sequence, the allowable idle equipment rate shall not exceed fifty percent (50%) of the hourly depreciation costs listed in the Cost Reference Guide, for second or third shifts. It is agreed that this rate shall represent payment in full for all the CONTRACTOR's direct costs.

3. EQUIPMENT HAULAGE AND SET UP COSTS

a. Documented and actual equipment haulage and set up costs shall be paid for, if applicable as set forth in C of this Article.

4. OTHER EQUIPMENT COST GUIDES

a. In the event that a piece of equipment used on a Change Order is not listed in the Blue Book or the CRG, costs may be derived from the Associated General CONTRACTOR's of America Equipment Ownership Guide, the Associated Equipment Dealers Guide, or the Equipment Rate Guide published by the U.S. Army Corps of PROJECT MANAGERs as adjusted appropriately for the type of Work and use and the regional area of the Work under this Contract.

I. BONDS AND INSURANCE COSTS

1. Bond premium adjustment, consequent upon the Change Orders issued by the PROJECT MANAGER, shall be paid at the time of completion of the Work and will not be included in individual Change Orders. Additional bond costs on the incremental value of all Change Orders issued under the Contract shall be paid for through issuance of a separate Change Order upon receipt, by the PROJECT MANAGER, or a fully paid invoice from the CONTRACTOR's and Subcontractor's sureties. No allowances for overhead or profit shall be included in such separate Change Order.

2. Insurance costs, other than insurance assessed on labor costs, consequent upon the Change Orders issued by the PROJECT MANAGER, shall be paid for by the PROJECT MANAGER at the time of completion of the Work and will not be included in individual Change Orders. Additional insurance costs on the incremental value of all Change Orders issued under the Contract shall be

paid through issuance of a separate Change Order upon receipt of a fully paid invoice from the CONTRACTOR's and Subcontractor's insurance carriers. On Contracts where the duration exceeds 365 calendar days from Notice to Proceed, the CONTRACTOR and its Subcontractors will be allowed to submit such fully paid invoices at the end of every year after issuance of the Notice to Proceed, and again at the end of the Project.

J. RECORDS

1. The CONTRACTOR's records shall make clear the distinction between the direct costs of Work paid for under the Change Order and the costs of the base scope Work under the Contract. Furnish the INSPECTOR with daily report sheets in duplicate of each day's cost reimbursement Work no later than the working day following execution of said Work. The daily report sheets shall itemize the materials and equipment used in the Work. The daily report sheets shall provide for identification and classification of workers; the hourly rates of pay and hours worked; and the size, type, identification number, and hours operated for each piece of equipment. The Daily Report sheets shall itemize the materials used in the Work.

2. Substantiate material charges by copies of vendor's invoices. Submit such invoices with the daily report sheets or, if not available at that time, submit with subsequent daily report sheets. Sign daily report sheets by the CONTRACTOR or his authorized agent and the INSPECTOR at the time of submittal.

3. On a weekly basis submit to the PROJECT MANAGER an approximate accounting of the Contract expended on the cost reimbursement Work to date and an estimate of the Impact to the time of performance of Work.

28. PRICE REDUCTION FOR DEFECTIVE COST OR PRICING DATA

A. If the PROJECT MANAGER determines that any price, including profit or fee, negotiated in connection with any Change Order under this contract, or any cost reimbursable under this Contract, was increased because:

1. The CONTRACTOR furnished cost or pricing data which was not accurate, complete, and current as certified in the CONTRACTOR's Certificate of Current cost or Pricing Data;

2. A Subcontractor or prospective Subcontractor furnished cost or pricing data was submitted in support of a subcontract cost estimate furnished by the CONTRACTOR but which was not accurate, complete, and current as of the date certified in the CONTRACTOR's Certificate of Current Cost or Pricing Data.

3. The CONTRACTOR or a Subcontractor or prospective Subcontractor, at any tier, furnished any data not within paragraph 1 or 2 above, which was not accurate as submitted;

then price shall be reduced accordingly and the Contract shall be modified in writing as may be necessary to reflect such reduction. However, any reduction in the Contract price due to defective subcontract data of a perspective Subcontractor, when the subcontract was not subsequently awarded to such Subcontractor, will be limited to the amount (plus applicable overhead and profit allowances) by which the actual subcontract or actual cost to the CONTRACTOR if there was no Subcontract, was less than the prospective subcontract cost estimate submitted by the CONTRACTOR; provided that the actual subcontract price was not affected by defective cost or pricing data.

B. The following certification from the CONTRACTOR is required to be provided on all Change Order quotations or requests for adjustment in excess of $10,000.

1. CERTIFICATION OF CURRENT COST AND PRICING DATA.

2. This is to certify that, to the best of my knowledge and belief, cost or pricing data submitted in writing, or specifically identified in writing if actual submission of the data is impracticable, to the

CITY in support of [CONTRACTOR is to insert appropriate identification such as Change Order quotation, proposal quotation, price adjustment, etc.] are accurate, complete, and current as of [CONTRACTOR to insert date].

CONTRACT NO.: _____

PROPOSED CHANGE ORDER NO.: _____

FIRM: _____

NAME: _____

TITLE: _____

DATE: _____

SIGNATURE: _____

29. PAYMENT FOR MATERIALS OR EQUIPMENT DELIVERED AND STORED ON THE JOB

A. Partial payment for materials or equipment delivered to the worksite and stored shall be subject to the following conditions:

1. Payment will not be made for any materials or equipment unless each individual piece of the material or equipment becomes a permanent part of the Work and has a value of more than $5,000.
2. The material or equipment is required by the specifications, and is specifically manufactured for the Project and could not readily be utilized or diverted to another job.
3. The CONTRACTOR shall provide secure storage facilities as required in STORAGE OF MATERIALS AND EQUIPMENT of these General Requirements.
4. No payment will be made for living or perishable Plant material, or for degradable materials such as rock, sand, cement, or for reinforcing steel, miscellaneous piping, off the shelf and catalog items, and similar items of construction, until they are incorporated into the Work.
5. The payment for the materials or equipment shall not exceed ninety-five percent (95%) of the invoice cost. The amount paid shall not exceed the total amount of the bid item less an amount estimated for installation.
6. Include cost loaded activities for the materials and equipment, for which payment will be requested, in the Schedule of Values. The CONTRACTOR shall provide all documentation necessary to establish the cost of the materials or equipment.
7. Suppliers, fabricators, or manufacturers who intend to furnish materials or equipment to the CITY must file a notice with the CITY in accordance with the State of California lien laws.
8. Each supplier, fabricator or manufacturer shall file a list, with the INSPECTOR, indicating the materials or equipment to be furnished to the Project. They shall also provide a notarized declaration from their company indicating the employees authorized to sign an unconditional release for the company. The persons signing the declaration and the unconditional release shall be identified by name and title.
9. Each request for payment shall include a notarized Unconditional Release, which conforms to the California Civil Code. The release shall be signed by an authorized employee identified in the corporate declaration. The request shall include the suppliers invoice for the materials or equipment.

10. Absorb costs incurred to meet the requirements of this Article without modification to the Contract amount.

30. PAYMENT FOR MATERIALS OR EQUIPMENT STORED OFF THE JOBSITE

A. Partial payment for materials or equipment stored off the jobsite shall be subject to the following conditions:

1. Payment will not be made for any materials or equipment unless each individual piece of the material or equipment becomes a permanent part of the Work and has a value of more than $5,000, unless otherwise approved by the city.

2. The materials or equipment is required by the specifications, and is specifically manufactured for the Project and could not readily be utilized or diverted to another job.

3. No payment will be made for living or perishable Plant material, or for degradable materials such as rock, sand, cement, or for reinforcing steel, miscellaneous piping, off the shelf and catalog items, or similar items, until they are incorporated into the Work.

4. Payment for the materials or equipment stored shall not exceed sixty percent (60%) of the invoice cost of the materials or equipment. Percent of the invoice paid shall be at the discretion of the CITY. The amount paid shall not exceed the total amount of the bid item less an amount estimated for installation.

5. Include cost loaded activities for the materials and equipment, for which payment will be requested, in the Schedule of Values. Provide documentation necessary to establish the cost of the materials or equipment.

6. Suppliers, fabricators, or manufacturers who intend to furnish materials or equipment to the CITY must file a notice with the CITY in accordance with the State of California lien laws.

7. Each supplier, fabricator or manufacturer shall file a list, with the INSPECTOR, indicating the materials or equipment to be furnished to the Project. They shall also provide a notarized declaration from their company indicating the employees authorized to sign an unconditional release for the company. The persons signing the declaration and the unconditional release shall be identified by name and title.

8. Each request for payment shall include a notarized Unconditional Release, which conforms to the California Civil Code. The release shall be signed by an authorized employee identified in the corporate declaration. The request shall include the suppliers invoice for the materials or equipment.

9. Store the materials and equipment as required in STORAGE OF MATERIALS AND EQUIPMENT of these General Requirements, in a bonded warehouse or facility approved by the INSPECTOR. The storage site shall be located within 50 miles of the geographic limits of the CITY. The materials and equipment shall be physically segregated from all other materials or equipment within the facility and shall be identified as being the "PROPERTY OF THE CITY OF LOS ANGELES". Exercise measures necessary to ensure preservation of the quality, quantity, and fitness of such materials or equipment and perform the manufacturers recommended maintenance of the materials or equipment. Inspect the materials and equipment, and submit a monthly written report to the INSPECTOR listing the equipment stored, results of their inspection, and the maintenance performed.

10. Grant the INSPECTOR and the PROJECT MANAGER access to the storage facility at any time and assist the INSPECTOR and the PROJECT MANAGER in conducting a full view, piece by piece, inventory of all such material or equipment.

11. Provide additional insurance necessary to insure the materials or equipment against loss of damage. The insurance provided shall be provided as stated in Article 37, INSURANCE of the General Conditions. The insurance shall cover the material or equipment, while stored at the

approved site, while in transit to the project site, while being off-loaded at the site and until the material or equipment is incorporated into the Work and the Contract is accepted by the BOARD.

12. Be responsible for damage to, defects therein, misfabrication thereof, or loss of the materials or equipment.

13. Be responsible for any resulting Project delays or consequential damages as if the CONTRACTOR were the owner of the material or equipment until it is incorporated in the Work and accepted by the CITY.

14. Absorb any and all cost incurred to meet the requirements of this Article without modification in the Contract amount.

15. Present the storage arrangements in writing and sign a Security Agreement, which shall be submitted to the INSPECTOR for approval by the CITY ATTORNEY. This agreement shall set forth the terms of ownership, storage and insurance necessary to insure the material or equipment against damage or loss.

31. PAYMENT FOR PERMITS

See PAYMENT FOR MOBILIZATION of these General Requirements.

32. AUDIT AND ACCESS TO RECORDS

A. Maintain books, records, documents and other evidence directly pertinent to performance of Work under this Contract in accordance with generally accepted accounting principles and practices consistently applied. Also maintain the financial information and data used by the CONTRACTOR in the preparation or support of cost submissions required for this Contract, or any Modifications or claims, and a copy of the cost summary submitted to the CITY. The CITY authorized representatives shall have access, at all times during normal business hours, to such books, records, documents and other evidence for the purpose of inspection, audit and copying. Provide proper facilities for such access and inspection.

B. Agree to make A through G of this Article applicable to this Contract and Modifications or claims affecting the Contract price. Agree to include A through G of this Article in all his contracts and all tier Subcontracts in excess of $5,000, and to make A through G of this Article applicable to Modifications and claims related to Project performance.

C. Audits conducted under this Article shall be in accordance with generally accepted auditing standards and established procedures and guidelines of the reviewing or audit agency.

D. Agree to the disclosure of information and reports resulting from access to records under A and B of this Article, to the CITY and affected agencies.

E. Records under A and B of this Article shall be maintained and made available during performance of Work under this Contract until final payment, or until settlement of all disputes, claims, or litigation, whichever occurs later. In addition, those records which relate to any portion of this Contract, to any Modification, to any dispute, to litigation, to the settlement of claims arising out of such performance, or to costs or items to which an audit exception has been taken, shall be maintained and made available until final payment or until final resolution of such dispute, litigation, claim or exception, whichever occurs later.

F. This right of access Article applies to financial records pertaining to this Contract and all Contract Modifications. In addition this right of access applies to all records pertaining to all contracts, contract modifications, and contract amendments:

1. To the extent the records pertain directly to Contract performance;

2. If there is any indication that fraud, gross abuse or corrupt practices may be involved; or

3. If the Contract is terminated for default or for convenience.

G. Access to records is not limited to the required retention periods. The authorized representatives designated in A of this Article shall have access to records at any reasonable time for as long as the

records are maintained.

H. Provided that CITY has made demand for access or audit pursuant to this Article, CONTRACTOR's compliance with provisions A through G of this Article shall be a condition precedent to maintenance of any legal action or proceeding by the CONTRACTOR against the CITY and to CONTRACTOR's right to Progress or Final Payment. Without limitation to the foregoing or to any other provisions for withholding set forth in the Contract Documents, CITY shall have the right, in its sole discretion and in addition to any right of withholding of retention, to further withhold from any payment to CONTRACTOR a sum of up to ten percent (10%) of the total amount set forth in CONTRACTOR's current, unpaid Application(s) for Payment, until CONTRACTOR has complied with any outstanding and unsatisfied request by CITY for audits under this Article. Upon CONTRACTOR's compliance with this Article, any monies withheld pursuant to this Paragraph solely due to CONTRACTOR's failure to permit an audit requested by CITY shall be released to CONTRACTOR.

I. CONTRACTOR hereby consents and agrees that any failure by CONTRACTOR to provide access to records as provided in A through G of this Article shall be specifically enforceable by issuance of a preliminary and/or permanent mandatory injunction by a court of competent jurisdiction based on affidavits submitted to such court, without the necessity of oral testimony, to compel CONTRACTOR to permit access and inspection of the records or to require delivery of the records to CITY for inspection.

MISCELLANEOUS

33. INTERFACE/COORDINATION REQUIREMENTS

A. Vehicular and pedestrian traffic adjacent to the laydown area and/or within the jobsite must be maintained. If an existing street in the CONTRACTOR's work area is to be demolished or obstructed, the CONTRACTOR shall be responsible for providing access through or around the effected area, including signs, barricades, and lights, as approved by the PROJECT MANAGER and any local agencies having jurisdiction over any public access areas. The CONTRACTOR shall follow WATCH standards and City of Los Angeles Department of Transportation Worksite Traffic Control Plans for all traffic, including a minimum traffic lane dimensions for vehicles and pedestrians.

B. The CONTRACTOR shall not park any vehicles, including concrete, hauling and delivery trucks, in any street at any time unless approved by the PROJECT MANAGER. Access must be maintained at all times for emergencies, sampling, equipment operations, maintenance and like items.

C. Before altering any vehicular or pedestrian access, the CONTRACTOR shall notify the PROJECT MANAGER thirty (30) days in advance on forms provided by the PROJECT MANAGER. The CONTRACTOR shall then request the alteration on forms provided by the PROJECT MANAGER. Requests shall include reasons for the alteration, times, boundary limits, special safety measures, proposed traffic rerouting with widths of such route, and a map detailing the above. Such requests shall be submitted to the PROJECT MANAGER not less than fifteen (15) days before the requested date of the access alteration. If any of the information changes, an additional fifteen (15) days may be required after the changes are brought to the attention of the PROJECT MANAGER. Approval when granted, will always be conditional. Final approval of the request, including date and time, will be given three (3) days in advance. The CITY retains the right to ticket and impound vehicles blocking traffic.

34. PROGRESS PHOTOGRAPHS

A. As directed by the PROJECT MANAGER, take a minimum of 4 views of each Project worksite location, at 14 days intervals during the entire period of Contract Work. Take the first photographs before start of construction operations at the jobsite. Take the final photographs when all Contract Work has been completed and accepted by the CITY regardless of time intervals since previous photographs were taken. View locations shall be as directed by the PROJECT MANAGER.

B. Provide 4, 8-inch by 10-inch color prints of each photograph on double weight glossy paper with each monthly progress report. Clearly label each print with the name of the job, view location, date of exposure and CONTRACTOR's name. Photographs and prints shall be of professional quality.

C. Submittal of progress photographs shall be a condition precedent to the making of the monthly payments.

35. COMMUNITY RELATIONS

A. The contractor shall cooperate with the City in conducting a public relations program for the project. The program will provide information to address concerns and complaints and to promote a positive project image. Contractor cooperation shall include the following:

1. The Project Manager shall attend public meetings, when requested by the PROJECT MANAGER.
2. Provide safe access for on-site community meetings and tours, on average twice per month per work site. Tours will be conducted by the PROJECT MANAGER and will be coordinated with the Contractor to limit interference with the work.
3. Do not provide any information directly to the public or news media without approval of the PROJECT MANAGER.

36. PROJECT CLOSEOUT

A. CLOSEOUT TIMETABLE

The CONTRACTOR shall establish dates for equipment testing and acceptance periods (as required under the Contract). Such dates shall be established not less than one week prior to beginning any of the foregoing items, to allow the CITY, the PROJECT MANAGER, and their authorized representatives sufficient time to schedule attendance at such activities.

B. FINAL SUBMITTALS

1. The CONTRACTOR, prior to requesting final payment, shall obtain and submit the following items to the PROJECT MANAGER.
    a. Written guarantees, where required.
    b. Technical manuals and instructions.
    c. Maintenance stock items; spare parts; special tools.
    d. Completed record drawings.
    e. Certificates of inspection and acceptance by local governing agencies having jurisdiction.
    f. Releases from all parties who are entitled to claims against the subject project, property, or improvement pursuant to the provisions of law.

C. FINAL CLEANUP

The CONTRACTOR shall perform all tasks specified in REMOVAL, CLEANUP, AND DEMOBILIZATION of these General Requirements.

D. MAINTENANCE AND GUARANTEE

1. The CONTRACTOR shall make all repairs and replacements promptly upon receipt of written order from the PROJECT MANAGER. If the CONTRACTOR fails to make such repairs or replacements promptly, the PROJECT MANAGER reserves the right to do the work and the CONTRACTOR and his surety shall be liable to the CITY for the cost thereof.
2. Replacement of earth fill or backfill, where it has settled below the required finish elevations, shall be considered as a part of such required repair work, and any repair or resurfacing constructed by the CONTRACTOR which becomes necessary by reason of such settlement shall likewise be considered as a part of such required repair work.

E. BOND

1. The CONTRACTOR shall provide a bond to guarantee performance of the provisions contained in Article 31 and Article 37 (Paragraph K) of the General Conditions, Article 24 of these General Requirements, Paragraph D of this Article.

ATTACHMENTS

ATTACHMENT TO GENERAL REQUIREMENTS ARTICLE 27

CHANGE ORDER COST QUOTATION FORM **DATE __/__/20__**

Estimate Summary for Prime CONTRACTOR Total Costs

W.O. _____ C.O. _____ CONTRACT #_____

ESTIMATOR_____P.E._____

	LABOR PER General Requirements 27		
	Journeyman **Supervision**		
	_____ MH **_____ MH**	**$**	
	2) MATERIALS (and Other Taxables)		
	Including Sales Tax	**$**	
	3) EQUIPMENT(Rented, Leased, and/or OWNED)		
	Blue Book and/or CRG, including Sales Tax if applicable	**$**	
SUBTOTAL	**(A) _____ 1) + 2) + 3)**		**$**
	4) G and A OH per General Requirements 27		
	Show calculations on separate sheet	**$**	
SUBTOTAL	**(B)_____ (A) + 4)**		**$**
	5) PROFIT_____% x Line (B)		
	Per General Requirements 27	**$**	
SUBTOTAL	**(C) _____ (B) + 5)**		**$**
	6) SUBCONTRACTS (All Subcontractors)	**$**	
	7) FIXED FEE FOR ALL SUBS 6%		
	Per General Requirements 27	**$**	
SUBTOTAL	**(D) _____ (C + 6) + 7)**		**$**
	8) FIELD OFFICE OVERHEAD:		
	$ _____ X _____ DAYS		
	Exclude if not required	**$**	
	9) SCHEDULING COSTS ($200 Max.)		
	Exclude if not required	**$**	
SUBTOTAL	**(E) _____ (D) + 8) + 9)**		**$**
	10) IMPACT COST, per General Requirements 27		
	Show calculations on separate sheet	**$**	
GRAND TOTAL	**_____ (E) +10)**		**$**

CHANGE ORDER COST QUOTATION FORM

Estimate Summary for Prime CONTRACTOR Total Costs **DATE __/__/20__**

W.O._____ C.O. _____ CONTRACT #_____

ESTIMATOR _____ P.E._____

		LABOR PER General Requirements 27 **Journeyman Supervision** **_____ MH _____ MH**	**$**	
	2)	**MATERIALS (and Other Taxables)** **Including Sales Tax**	**$**	
	3)	**EQUIPMENT(Rented, Leased, and/or OWNED)** **Blue Book and/or CRG, including Sales Tax if applicable**	**$**	
SUBTOTAL	**(A)**	**_____ 1) + 2) + 3)**		**$**
	4)	**G and A OH per General Requirements 27** **Show calculations on separate sheet**	**$**	
SUBTOTAL	**(B)**	**_____ (A) + 4)**		**$**
	5)	**PROFIT _____% x Line (B)** **Per General Requirements 27**	**$**	
SUBTOTAL	**(C)**	**_____ (B) + 5)**		**$**
	6)	**SUBCONTRACTS (ALL SUB-SUBS)**	**$**	
	7)	**FIXED FEE FOR ALL SUB-SUBS 6%** **Per General Requirements 27**	**$**	
SUBTOTAL	**(D)**	**_____ (C + 6) + 7)**		**$**
	8)	**FIELD OFFICE OVERHEAD:** **$ _____ X _____ DAYS** **Exclude if not required**	**$**	
SUBTOTAL	**(E)**	**_____ (D) + 8)**		**$**
		IMPACT COST, per General Requirements 27 **Show calculations on separate sheet**	**$**	
GRAND TOTAL		**FOR SUBCONTRACTOR (E) + 9)** **To Line 6) of Prime CONTRACTOR'S Summary**		**$**

THIS PAGE INTENTIONALLY LEFT BLANK

III. SUPPLEMENTARY GENERAL REQUIREMENTS

GRANADA HILLS PARK
POOL AND BATHHOUSE REPLACEMENT
PROJECT

PREPARED BY:

BUREAU OF ENGINEERING - ARCHITECTURAL DIVISION
DEPARTMENT OF PUBLIC WORK
CITY OF LOS ANGELES

WORK ORDER NO: E170517F

ENGINEERING
CITY OF LOS ANGELES

THIS PAGE INTENTIONALLY LEFT BLANK

SUPPLEMENTARY GENERAL REQUIREMENTS

1.0 GENERAL SCOPE OF WORK:

A. Work in this Contract: All labor, material, and equipment necessary for construction of **the Granada Hills Park - Pool and Pool Building Replacement** as noted on the Contract Drawings and in these Specifications (Project Manual) and all other Contract Documents including but not limited to the GENERAL CONDITIONS, and GENERAL REQUIREMENTS.

B. Demolition of existing pool, pool deck, pool equipment building, utilities and other improvement elements as shown on Plan Sheets CD101, C400, L-0.20, L-0.30, L-1.01, L-1.02, A2.00, P2.00, PSD1.01, E-1.1.

C. Demolition, removal or modification of erosion control as shown on Plan Sheet C600 will be necessary to construct this project and must be included in contract price.

D. The Project Site will be excavated and re-compacted per the Geotechnical Report to permit construction of the pool and pool equipment building. This area boundary is approximately 160 feet southerly of Chatsworth Street property line and about 50 feet easterly of the existing concrete walkway edge that leads into the park from Petit Ave. This area must be excavated and re-compacted to conform to the Geotechnical Report and to allow construction of the project. This is to be included in the contract price.

1.1 CONTRACT DRAWINGS: In addition to provisions noted in the GENERAL CONDITIONS and the GENERAL REQUIREMENTS.

1.2 The following are in addition to GENERAL CONDITIONS and GENERAL REQUIREMENTS:

- This Supplementary General Requirements
- All Soils Report Approval Letters from the Department of Building and Safety for this project.
- All Soils Report Correction Letters from the Department of Building and Safety for this project.
- All Geotechnical and Supplementary Geotechnical Engineering Reports, Geotechnical Engineering Division for this project.
- Asbestos and Lead Survey Report for this project.
- Protection of Trees During Construction Guidelines (12-page Tree Care Manual)
- Project Specifications. See specifications set.
- Construction Document Sheets. See plans set.

1.3 **PRIME CONTRACTOR'S MINIMUM QUALIFICATIONS and EXPERIENCE:** The prime contractor that will actually construct the project must have adequate qualifications and experience in constructing public recreation facilities. In order for a bid to be considered eligible for this project, the prime contractor must have completed at least three (3) public recreation facilities of $5 million or greater each for government agencies in the past six (6) years. The facilities must be new construction and currently in operation. The bidder must complete and submit with the bid the "Prime Contractor's Minimum Qualifications – Experience with Public Recreation Facilities Construction" forms (pages GR-S3 through GR-S4), attached herewith. **Failure to submit the completed said forms with the bid or failure to meet the minimum qualifications of the Prime Contractor will result in the bid being non-responsive**.

1.4 **POOL CONTRACTOR'S MINIMUM QUALIFICATIONS and EXPERIENCE:** The specific contractor that will actually construct the lap pool and spray pad activity pool must have adequate qualifications and experience in constructing public swimming pools comparable to this project. In order for a bid to be considered eligible for this project, the pool contractor must have a C-53 license and must have completed in the last six (6) years at least five (5) public use pools for government agencies each with:

- A size of at least 50 meters in length and water surface area in excess of 6,000 square feet, **or** a size of at least 25 yards in length and water surface area in excess of 6,000 square feet
- Cast-in-place concrete construction or shortcrete construction
- Tile finish with painted finished or plastered finished concrete shell
- Perimeter overflow gutter in conjunction with a self-modulating surge and balance tank system

The pools must be all new construction including the pool shell and must be currently in operation for at least one

year. Only cast-in-place concrete or shortcrete built pools will be considered in assessing the required experience of the POOL CONTRACTOR. The bidder must complete and submit with the bid the "Pool Contractor's Minimum Qualifications – Experience with Public Swimming Pool Construction" forms (pages GR-S5 through GR-S6), attached herewith. **Failure to submit the completed said forms with the bid or failure to meet the minimum qualifications of the Pool Contractor will result in the bid being non-responsive**.

1.5 **QUALIFIED STORM WATER POLLUTION PREVENTION PLAN (SWPPP) DEVELOPER (QSD) and QUALIFIED SWPPP PRACTITIONER (QSP):** All qualifying bidding contractors shall have under their employment or contract the QSD that will be responsible for preparing, amending, and certifying the SWPPP for this project, and the QSP that will be responsible for performing the monitoring of the storm water and non-storm water visual observations, sampling, and analysis of the Best Management Practices (BMPs) required by the State of California Water Resources Control Board General Permit and the Section 01571 of the specifications. This form (page GR-S7) must provide valid names and certification numbers for the QSD and QSP at the time of bid to meet the minimum qualification for this project; however, submission of the form (pages GR-S7) does not in and of itself constitute qualification. **Failure to submit the completed said form with the bid will result in the bid being non-responsive**.

1.6 The following supplements modify the **"GENERAL REQUIREMENTS" (ATTACHMENT 'A')**

1. ADD Section **01116 "ELECTRONIC DOCUMENT CONTROL"**

2. ADD Section **01212 "FIXED CASH ALLOWANCE ITEMS"**

3. ADD Section **01353 "OPPORTUNITY TO PARTNER"**

4. SUBSTITUTE **Article 18 CONSTRUCTION SCHEDULE AND COMMENCEMENT OF WORK**" for Section **01321 "CONTRACTOR'S CONSTRUCTION SCHEDULE AND REPORTS"**

5. SUBSTITUTE **Article 10" SUBMITTALS"** for Section **01330 "SHOP DRAWINGS/SUBMITTALS"**

6. ADD **Section 01520 "CONSTRUCTION FACILITIES"** that will be used to substitute **Article 6 Mobilization**, Section B. Temporary Construction Utilities and Worksite Facilities, Note 6 in reference to field office trailers.

7. MODIFY the following items under **"MOBILIZATION"**

    a. ADD the following Note 15 under Item A. General: At least ten (10) days before the start of construction, the CONTRACTOR is required to notify, in writing, abutting property occupants of the proposed construction start date. A copy of said written notification shall be provided to the INSPECTOR.

8. ADD **Section 015723 "Stormwater Pollution Control Measures for Construction Activities,"** for project involves construction activity on more than one acre of disturbed soil.

PRIME CONTRACTOR'S MINIMUM QUALIFICATIONS -- EXPERIENCE with PUBLIC RECREATION FACILITIES CONSTRUCTION

FAILURE TO SUBMIT THIS FORM WITH THE BID OR FAILURE TO MEET THE MINIMUM QUALIFICATIONS OF THE PRIME CONTRACTOR OR FAILURE TO SUBMIT THIS FORM WITH THE BID WILL RESULT IN THE BID BEING NON-RESPONSIVE

The intent of this form is to solicit information to confirm if the prime contractor meets the minimum qualifications for the (Project Title). The prime contractor that will actually construct the project must have adequate qualifications and experience in constructing public recreation facilities. In order for a bid to be considered eligible for this project, the prime contractor must have completed at least three (3) public recreation facilities of $5 million or greater each for government agencies in the past six (6) years. The facilities must be new construction and are currently in operation. The bidder must complete and submit with the bid the "Prime Contractor's Minimum Qualifications – Experience with Public Recreation Facilities Construction" forms (pages GR-S3 through GR-S4), attached herewith. The forms (pages GR-S3 through GR-S4) will help to determine if the GENERAL CONTRACTOR meets the minimum qualification for this project; however, submission of the forms (pages GR-S3 through GR-S4) does not in and of itself constitute qualification.

The Bidder must submit information below on projects that the PRIME CONTRACTOR has completed.

PROJECT NO. 1

A. Project Information
   1. Project Name and Address_____
   2. Project Description (Meeting minimum qualifications above) _____
   3. Construction Cost_____
   4. Year Completed _____

B. Contact Information
   1. Owner / Reference Name _____
   2. Telephone _____

PROJECT NO. 2

A. Project Information
   1. Project Name and Address_____
   2. Project Description (Meeting minimum qualifications above) _____
   3. Construction Cost_____
   4. Year Completed _____

B. Contact Information
   1. Owner / Reference Name _____
   2. Telephone _____

PROJECT NO. 3

A. Project Information
   1. Project Name and Address_____

   2. Project Description _____
      (Meeting minimum _____
      qualifications above) _____

   3. Construction Cost_____

   4. Year Completed _____

B. Contact Information
   1. Owner / Reference Name _____

   2. Telephone _____

PROJECT NO. 4 (if applicable)

A. Project Information
   1. Project Name and Address_____

2. Project Description _____
      (Meeting minimum _____
      qualifications above) _____

   3. Construction Cost_____

   4. Year Completed _____

B. Contact Information
   1. Owner / Reference Name _____

   2. Telephone _____

PROJECT NO. 5 (if applicable)

A. Project Information
   1. Project Name and Address_____

   2. Project Description _____
      (Meeting minimum _____
      qualifications above) _____

   3. Construction Cost_____

   4. Year Completed _____

B. Contact Information
   1. Owner / Reference Name _____

   2. Telephone _____

POOL CONTRACTOR'S MINIMUM QUALIFICATIONS AND EXPERIENCE WITH PUBLIC SWIMMING POOLS CONSTRUCTION

FAILURE SUBMIT THIS FORM WITH THE BID OR FAILURE TO MEET THE MINIMUM QUALIFICATIONS OF THE POOL CONTRACTOR WILL RESULT IN THE BID BEING NON-RESPONSIVE

The intent of this form is to solicit information to confirm if the Pool Contractor meets the minimum qualifications as a pool builder for the Granada Hills Pool and Bathhouse Replacement project. The POOL CONTRACTOR that will actually construct the swimming pool must have completed in the last six (6) years at least five (5) public use recreation pools for government agencies with full perimeter deep trough gutter, surge tank, individual water surface area in excess of 6,000 square feet, and a depth of 12 feet or more. The pools must be all new construction including the pool shell and must be currently in operation for at least one year. These forms (pages GR-S2 through GR-S3) will help to determine if the POOL CONTRACTOR meets the minimum qualification for this project; however, submission of the forms (pages GR-S2 through GR-S3) does not in and of itself constitute qualification.

Submit the following information on projects that the POOL CONTRACTOR has completed.

PROJECT NO. 1

A. Project Information

1. **Project Name and Address** _____

2. **Project Description** _____
   (Meeting minimum _____
   qualifications above) _____

3. **Construction Cost** _____

4. **Year Completed** _____

B. Contact Information

1. **Owner / Reference Name** _____

2. **Telephone** _____

PROJECT NO. 2

A. Project Information

1. **Project Name and Address** _____

2. **Project Description** _____
   (Meeting minimum _____
   qualifications above) _____

3. **Construction Cost** _____

4. **Year Completed** _____

B. Contact Information

1. **Owner / Reference Name** _____

2. **Telephone** _____

PROJECT NO. 3

A. Project Information

1. Project Name and Address _____

2. Project Description _____
(Meeting minimum _____
qualifications above) _____

3. Construction Cost _____

4. Year Completed _____

B. Contact Information

1. Owner / Reference Name _____

2. Telephone _____

PROJECT NO. 4

A. Project Information

1. Project Name and Address _____

2. Project Description _____
(Meeting minimum _____
qualifications above) _____

3. Construction Cost _____

4. Year Completed _____

B. Contact Information

1. Owner / Reference Name _____

2. Telephone _____

PROJECT NO. 5

A. Project Information

1. Project Name and Address _____

2. Project Description _____
(Meeting minimum _____
qualifications above) _____

3. Construction Cost _____

4. Year Completed _____

B. Contact Information

1. Owner / Reference Name _____

2. Telephone _____

QUALIFIED SWPPP DEVELOPER
AND
QUALIFIELD SWPPP PRACTITIONER

FAILURE TO LIST A QUALIFIED STORM WATER POLLUTION PREVENTION PLAN (SWPPP) DEVELOPER (QSD) AND A QUALIFIED SWPPP PRACTIONER (QSP) OR FAILURE TO SUBMIT THIS FORM WITH THE BID WILL RESULT IN THE BID BEING NON-RESPONSIVE

The intent of this form is to solicit information to confirm the name and certification number of (A) the QSD that will be responsible for preparing, amending, and certifying the SWPPP for this project, and the name and certification number of (B) the QSP that will be responsible for performing the monitoring of the storm water and non-storm water visual observations, sampling, and analysis of the Best Management Practices (BMPs) required by the State of California Water Resources Control Board General Permit and the Section 01571 of the specifications. This form (page GR-S5) must provide valid names and certification numbers for the QSD and QSP at the time of bid to meet the minimum qualification for this project; however, submission of the form (pages GR-S5) does not in and of itself constitute qualification.

ITEM NO. 1

A. QUALIFIED SWPPP DEVELOPER

1. **Name of Qualified SWPPP Developer** _____
2. **Certification Number** _____
3. **Address** _____
4. **Telephone** _____

ITEM NO. 2

B. QUALIFIED SWPPP PRACTITIONER

1. **Name of Qualified SWPPP Practitioner** _____
2. **Certification Number** _____
3. **Address** _____
4. **Telephone** _____

THIS PAGE INTENTIONALLY LEFT BLANK

ATTACHMENT ‘A’

THIS PAGE INTENTIONALLY LEFT BLANK

THIS PAGE INTENTIONALLY LEFT BLANK

SECTION 01116

ELECTRONIC DOCUMENT CONTROL

1.1 USE OF ELECTRONIC DOCUMENT CONTROL SYSTEM

A. The CONTRACTOR shall use a web based document control system to submit and receive all construction related documentation on this project. The system used is “e2020” and costs associated for the use of the software have been paid for by the City. The website address to be used will be provided by the PROJECT MANAGER after award of the contract. The CITY will provide training to the CONTRACTOR on the use of the system. The information to be generated, transmitted and tracked by the e2020 document control system shall include, but not be limited to the following:

1. Correspondence (including PROJECT MANAGER’s Communication).
2. Plan Clarifications.
3. Request for Information (RFI’s).
4. Shop Drawings.
5. Change Orders.
6. Allowance Orders.
7. Progress Photos.
8. Project Schedules.
9. Meeting Minutes.
10. Permits.
11. Partnering (Issue Resolution Ladder, Charter).

B. When large drawings or product samples are required to be submitted that cannot be submitted through e2020, the CONTRACTOR shall:

1. Upload a transmittal sheet for the submittal in e2020,
2. Submit six (6) full-size hard copies,
3. Submit one half-sized hard copy (not exceeding 11x17 inches),
4. Transmit electronic files to the PROJECT MANAGER in Adobe Acrobat (.PDF) format.

C. The CONTRACTOR shall be responsible for the installation of its own computer system, scanner, and the procurement of an Internet Service Provider (ISP) with a high speed broadband internet connection for its own and the PROJECT MANAGER/INSPECTOR site offices to access the document control system.

D. At the request of the PROJECT MANAGER, the CONTRACTOR must provide a hard copy of approved submittals to the INSPECTOR, at no additional cost to the CITY.

(END OF SECTION)

SECTION 01212
FIXED CASH ALLOWANCE ITEMS

1.1 THE REQUIREMENT

A. A fixed cash allowance has been allocated to each of the following items of the Bid Breakdown (see Bid Proposal). Requirements for each Fixed Cash Allowance Item are specified in the GENERAL REQUIREMENTS (GR) section referenced below. Overhead and Profit, at the rates listed below, shall be added to the actual invoiced amount.

Bid Item No.	Description	Overhead and Profit
1.	MOBILIZATION per GENERAL REQUIREMENT, Article 21 **$200,000**	0%
2.	ALLOWANCE FOR PERMIT per the GENERAL CONDITION Article 19 and GENERAL REQUIREMENTS Article 31. **$70,600**	0%

B. If these items are not executed, or are only partially executed, or the allowance for any item is not expended or partially expended, then a deductive Change Order shall be issued for the amount that is not expended. If, however, these items are over expended (with ENGINEER'S prior approval), then an appropriate Change Order shall be executed in accordance with the provisions of the GENERAL REQUIREMENTS Section 01254 –- CHANGE ORDERS, except for Overhead and Profit wherein the above listed rates shall apply.

C. The ENGINEER'S AND INSPECTOR'S field office supply allowance is to be used at the ENGINEER'S and/or INSPECTOR'S discretion to purchase office supplies and/or office equipment, perform repairs to field offices or equipment owned or leased by the City, pay field office utility bills, purchase reference documents, etc. The items covered by this allowance are in addition to those required to be furnished by the CONTRACTOR under GR Section 01721-Mobilization. The CONTRACTOR shall be reimbursed the actual invoice amount plus the markup allowed by Section A, above.

(END OF SECTION)

THIS PAGE INTENTIONALLY LEFT BLANK

SECTION 01353
OPPORTUNITY TO PARTNER

1.1 THE REQUIREMENT

A. The successful bidder will have the opportunity to enter into a cooperative partnership agreement with the CITY for the contract. Participation in Partnering is highly encouraged. Partnering will create a framework for conflict resolution, improved communications, reduced litigation, and cost containment. During the partnering session, all parties will participate in developing an Issue Resolution Ladder, which will help establish and communicate the chain of command in each organization (See Attachment 01353–A1). Each level of the organization is expected to work cooperatively to resolve issues. However, if issues cannot be resolved in a timely manner or are beyond the authority granted that level, each party understands that the issue must be elevated to the next level.

B. The objective of this Partnering agreement would be effective completion of the Work on time and to achieve a standard of quality that would be a source of pride to both the CITY and the CONTRACTOR. Partnering is intended only to establish an environment of cooperation between the parties and will not affect the terms of this contract.

C. An initial partnering session of 8 hours is recommended to initiate the partnership agreement. All subsequent partnering sessions (of 4 hours each) shall be held quarterly unless it is deemed unnecessary by the PROJECT MANAGER. The meeting shall be held at a mutually agreed upon time and place. The cost of the partnering session shall exclude staff labor charges. No Overhead and Profit shall be added to the cost of the partnering session. If a third-party facilitator is used, a change order will be issued to the contractor to reimburse the contractor for the cost of the facilitator.

(END OF SECTION)

(SEE ATTACHMENT)

ATTACHMENT TO SECTION 01353

Attachments to General Requirements Section 01353 consists of one (1) document, as follows:

ATTACHMENT NUMBER	TITLE OF ATTACHMENT	NUMBER OF PAGES IN THIS ATTACHMENT
01353-A1	Issue Resolution Ladder – Line Management Form	1

City of Los Angeles, Department of Public Works
Bureaus of Engineering and Contract Administration

Contractor: **{name}**

Project Title: **{title}**

Issue Resolution Ladder – Line Management

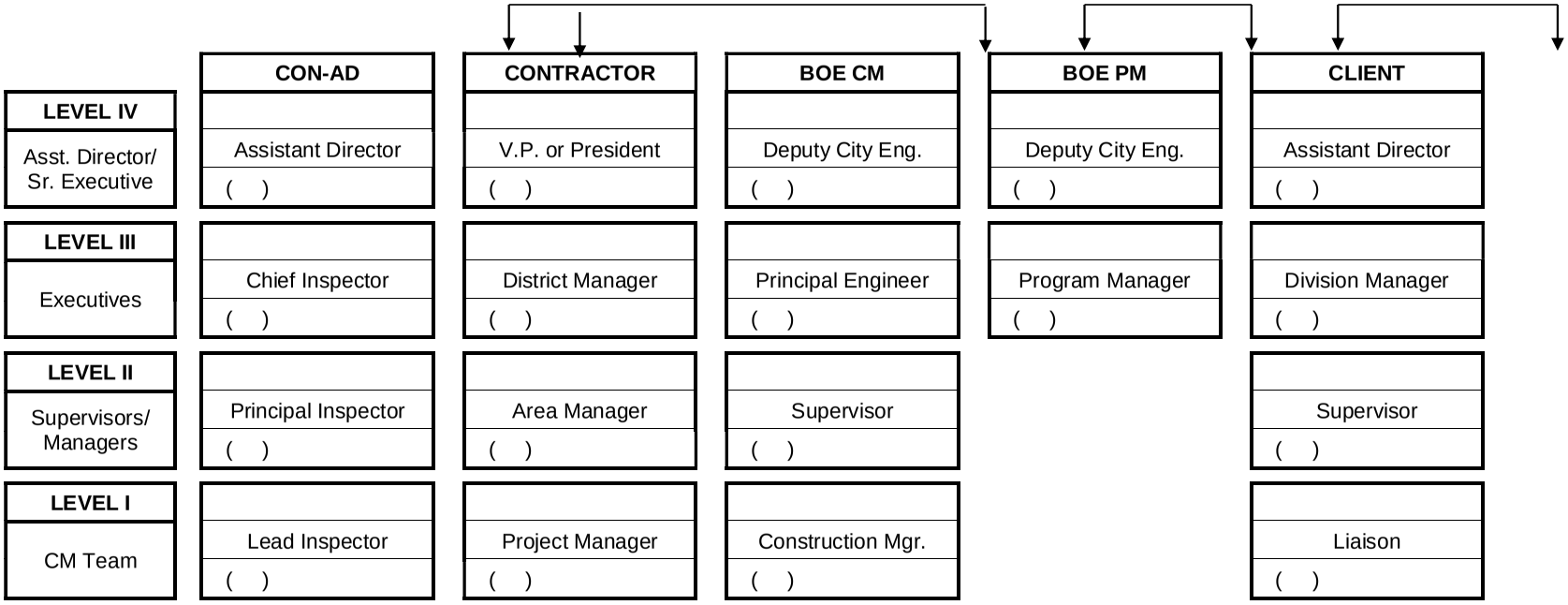

SECTION 01353

SECTION 01321

CONTRACTOR'S CONSTRUCTION SCHEDULE AND REPORTS

1. THE REQUIREMENT

A. Progress of the Work

1. It is expressly understood and agreed that the time of beginning, the rate of progress, and the time of completion of the Work are of the essence of this Contract. The Work shall be executed with such progress as required to prevent any delay to other CONTRACTORS that may be working on other contracts at the site, the Contract milestones, and the general completion of the Contract.

B. CONTRACTOR'S Construction Scheduler

1. The CONTRACTOR shall continuously employ or retain the services of a Construction Scheduler. The Construction Scheduler shall have at least five (5) years of verifiable experience as the person primarily responsible for preparing and maintaining detailed project schedules on projects of the same or similar size and nature as this project. The Construction Scheduler is required to attend all meetings pertaining to scheduling and progress of the Work. If the construction scheduler leaves employment of the CONTRACTOR, the CONTRACTOR must fulfill the requirements of B.2 a and b within thirty (30) days.

2. Within five (5) calendar days after the Notice of Award the CONTRACTOR shall provide a statement to the PROJECT MANAGER with the following:

a. Identification, qualifications, and experience of the CONTRACTOR’S Construction Scheduler and all other members of the CONTRACTOR’S scheduling staff.

b. References of not less than two (2) previous projects on which the CONTRACTOR’S Construction Scheduler has utilized CPM scheduling.

(As used in this Section only, "days" mean consecutive calendar days unless otherwise noted.)

3. The PROJECT MANAGER and the INSPECTOR reserve the right to disapprove any scheduling candidate or Scheduling System proposed for the project. The PROJECT MANAGER and the INSPECTOR reserve the right to remove, without rights to work on the project, any member of the CONTRACTOR’S scheduling staff, that is, in the PROJECT MANAGER’S or INSPECTOR’S opinion, incompetent in scheduling.

C. General

1. Schedule Methodology

a. The scheduling method to be used shall be a Critical Path Method schedule in the form of an activity on node Precedence Diagram Network (PDN) with capabilities of identifying the critical path. The principles and definitions of the terms used herein shall be as set forth in the Associated

General CONTRACTOR'S publication "CPM in Construction", latest edition. To the extent there are any conflicts between the Associated General CONTRACTOR'S publication and the Specifications, the Specifications shall govern.

2. Work Breakdown Structure

a. The CONTRACTOR shall submit to the PROJECT MANAGER for approval, at the Preconstruction Scheduling Conference, the following:

1) A Work breakdown structure.

2) The associated alphanumeric coding structure to implement the Work breakdown structure.

3) The activity identification system for labeling all Work activities.

The first code field shall designate the bid item. The second code field shall identify the type of activity. (Types of activities shall be defined as "submittal", "review/approval", "procurement/fabrication", "delivery", and "construction/installation" or "Change Order".) The third code field shall identify which Specification section the activity shall be paid under. The fourth code field shall identify who is responsible to perform the activity (i.e., CONTRACTOR, Subcontractor(s), Supplier, etc.). The fifth code field shall identify the area being worked in or the facility, if appropriate. The sixth code field shall identify the construction phase or project element (if phasing of Work or project elements are identified in the Contract.) All Change Orders and Notices of Non-Compliance shall be included as separate code fields.

3. Scheduling System

The CONTRACTOR shall use Primavera Project Management or Microsoft Project, latest version, and a hardware system commensurate with the size of the program. This shall be referred to as the Scheduling System. The system shall be capable of handling, processing, printing, and plotting data to satisfy all requirements of this Section.

D. Preconstruction Scheduling Conference

1. The PROJECT MANAGER will schedule and conduct a Preconstruction Scheduling Conference with the CONTRACTOR'S Project Manager and Construction Scheduler within seven (7) calendar days after Notice of Award, to commence development of the required project schedule. At this meeting, the requirements of this Section, as they apply to the Contract, will be reviewed with the CONTRACTOR. The CONTRACTOR shall be prepared to review and discuss methodology for the schedule and sequence of operations plus cost, manpower, and equipment loading methodology.

The Contractor shall include the effects of adverse weather in the construction schedule in terms of working days (wds). The number of wds, Monday through Friday excluding any day designated as a holiday by the City or in a Master Labor Agreement binding Contractor, of normal adverse weather per month is as follows: January-3 wds, February-2 wds, March-3 wds, April-1 wd, October-1 wd,

November-2 wds, December-2 wds. Unusually severe weather is defined as the number of working days over what is normal adverse weather, as defined in the previous sentence. For partial months, the aforementioned numbers shall be prorated and rounded to the nearest whole number. There shall be no extension of time for adverse weather unless the Contractor is prevented from working during the first five (5) hours of a workday with at least sixty percent (60%) of the normal work force on more days per month than listed above. Even if there is unusually severe weather, a non-compensable extension of time will not be granted unless the other conditions required by the General Conditions (GC) are met, negative impact to the critical path and delay beyond the current Contract Completion date in particular.

E. CONTRACTOR'S Detailed Project Schedule

1. Fifteen (15) calendar days after approval of the Preliminary Project Schedule, the CONTRACTOR shall provide to the PROJECT MANAGER an update on the progress in the development of the Project Schedule. The CONTRACTOR shall prepare and submit to the PROJECT MANAGER the Project Schedule within forty-five (45) calendar days after approval of the Preliminary Project Schedule.

2. The Detailed Project Schedule shall show the sequence and interdependence of activities required for complete performance of the Work, beginning with the date of the Notice to Proceed and concluding with the date of Final Completion of the Contract.

3. Pursuant to the float sharing requirements of the Contract, use of float suppression techniques such as preferential sequencing, special lead/lag logic restraints, extended activity times or imposed dates shall be cause for rejection of the Project Schedule and any revisions or updates. The use of float time disclosed or implied by the use of alternative float suppression techniques shall be shared as directed by the PROJECT MANAGER.

4. If the CONTRACTOR submits a Detailed Project Schedule showing completion of the Work more than thirty (30) calendar days in advance of the Contract completion date, the schedule shall show the time between the early completion date and the current Contract completion date as "project float". The CONTRACTOR agrees that the PROJECT MANAGER may, at no cost to the CITY, decrease the Contract duration by issuance of a Change Order which will change the appropriate Milestone Date(s) and the Contract completion date to the completion date reflected on the Project Schedule. Any approved schedule, revision, or update having an early completion date shall show the time between the early completion date and the current Contract completion date as "project float".

5. The PROJECT MANAGER will review and make comments on the Project Schedule. Meetings will be held between the PROJECT MANAGER, the CONTRACTOR, and all Subcontractors and Suppliers whom the CONTRACTOR may desire to invite or whom the PROJECT MANAGER may request be present.

6. Comments made by the PROJECT MANAGER on the Project Schedule, during review, will not relieve the CONTRACTOR from compliance with requirements of the Contract Documents. To the extent that there are any conflicts between the approved schedule and the requirements of the Contract Documents, the Contract Documents shall govern.

7. If requested by the PROJECT MANAGER at any time during the project, the CONTRACTOR shall provide highly detailed, a short-term schedule for specific crucial items (work-around, start-up, etc.) or for change order work that may change the schedule.

F. Network Details

1. The Project Schedule for the Contract shall include time-scaled network diagrams, based on calendar days, as well as computer tabulations. It shall be constructed to show the order in which the CONTRACTOR proposes to carry out the Work, to indicate restrictions of access and to show availability of Work areas, and availability and use of manpower, materials and equipment. The CONTRACTOR shall utilize the Project Schedule in planning, scheduling, coordinating, and performing the Work under the Contract (including all activities of Subcontractors, equipment vendors, and Suppliers). The CONTRACTOR will provide the PROJECT MANAGER with written confirmation of the concurrence of all major trade Subcontractors and Suppliers with the Project Schedule. (The term "major Subcontractors and Suppliers" as used in this Section, shall include any Subcontractor or Supplier with five (5) percent or more of the value of the Contract.) The logic shall be determined by which activity must be completed before a successor can start; maximum concurrent work; and manpower or equipment constraints which prevent concurrent work.

2. The Project Schedule shall provide the PROJECT MANAGER with a tool to monitor and follow the progress of all phases of the Work. The Project Schedule submitted to the PROJECT MANAGER shall comply with all limits imposed by the scope of Work, with all contractually specified intermediate milestone and completion dates, and with all constraints, restraints or sequences included in the Contract. The degree of detail shall include factors to the satisfaction of the PROJECT MANAGER, including, but not limited to:

a. Physical breakdown of the project.

b. Contract milestones and completion dates, substantial completion dates, constraints, restraints, sequences of Work shown in the Contract, the planned substantial completion date, and the final completion date.

c. Type of Work to be performed, the sequences, and the labor trades involved.

d. All purchases, submittals, submittal reviews, manufacturing, tests, delivery, and installation activities for all major materials and equipment, and a separate list of all major material items or items of equipment for which the CONTRACTOR intends to seek payment prior to installation.

e. Deliveries of CITY furnished equipment and/or materials in accordance with the dates or schedule windows of such items set forth in the Contract or furnished by the PROJECT MANAGER, or items to be salvaged and delivered to the CITY.

f. Preparation, submittal and approval of Shop and/or Working Drawings and material samples showing a [thirty (30) (for WW)][Twenty-one (21) (for MF)

day minimum time specified for the PROJECT MANAGER'S review of normal or routine submittals and a forty five (45) day review time for all major submittals, so identified in the technical specifications, and the same time frame shall be allowed for at least one (1) resubmittal on all major submittals so identified in the Contract Documents.

g. Approvals required by regulatory agencies or other third parties [notifications to utility companies, and request of services].

h. Planned activities for all subcontract Work, [concrete placement sequence, structural steel, plumbing, heat, ventilation, air conditioning, electrical, etc.].

i. Assignment of responsibility for performing specific activities,[notifications to utility companies and request of services].

j. Access to and availability of Work areas including all anticipated plant shutdowns, if applicable.

k. Identification of interfaces and dependencies with preceding, concurrent and follow-on CONTRACTORS and utilities as shown on the Plans or called out in the Specifications.

l. Resource loading for cost, manpower, material, and equipment.

m. Actual tests by the CONTRACTOR and the CITY, submission of test reports, and approval of test results.

n. All start up, testing, training, and assistance required under the Contract.

o. Planning for phased or total takeover by the CITY.

p. Punchlist and final cleanup.

q. Identification of any manpower, material, or equipment restrictions, as well as any activity requiring unusual shift work, such as two shifts, six (6) day weeks, specified overtime, or work at times other than regular days or hours, shall be clearly identified in the Project Schedule.

3. The activities included in the Project Schedule shall be analyzed in detail to determine activity durations in units of project working days. Durations shall be based on the labor, equipment, and materials required to perform each activity on a normal Workday basis. No on-site activity shall have a duration over fifteen (15) working days except non-construction activities such as submittals, submittal reviews, procurement and delivery of materials or equipment, and concrete curing. Only on-site construction activities will be shown in their resource loaded state to reflect cost, manpower, materials and equipment except for those activities specifically identified under 1.1F.2d of this Section. The manpower and equipment, by item designation, shall be shown for each construction activity for the network on a tabular listing, and in information furnished in accordance with O and P of this Section.

4. Critical or near critical paths resulting from the use of manpower or equipment restraints shall be kept to a minimum. Near critical paths shall be defined as those

paths having [fifteen (15) working days] [twenty one (21) calendar days] or less of total float at the time of initial submission. Restraints related to resource loading must be identified as “For resource loading only”.

5. The estimated cost to perform each work activity shall be noted for each activity in the network on a tabular listing. The sum of the costs assigned to all activities shall equal the Contract value. No activity costs shall be assigned to submittals or submittal reviews. The accepted cost loaded Project Schedule shall constitute the Schedule of Values in accordance with the SCHEDULE OF VALUES / CONTRACT PRICE BREAKDOWN of these GENERAL REQUIREMENTS, from which monthly progress payments will be made in accordance with the provisions of PARTIAL PAYMENTS in these GENERAL REQUIREMENTS. Acceptance of the Cost Loaded Schedule by the CITY does not relieve the CONTRACTOR’S responsibility to submit any cost information or data as requested by the PROJECT MANAGER for verification of cost.

6. The network diagram shall be prepared on (E) size sheets (28 inches by 40 inches), shall have a title block in the lower right-hand corner, and a timeline on each page. Exceptions to the size of the network sheets and the use of computer graphics to generate the networks shall be subject to the approval of the PROJECT MANAGER.

7. All networks shall be drafted time scaled to show a continuous flow of information from left to right. The primary path(s) of criticality shall be clearly and graphically identified on the network(s).

G. Detailed Project Schedule Reports

1. The Project Schedule submitted to the PROJECT MANAGER shall include the time scaled network diagram. Network diagrams shall be based on early start and early finish dates of activities shown. The network diagrams submitted to the PROJECT MANAGER shall also be accompanied by a computer-generated mathematical analysis for each activity included in the Project Schedule. Such mathematical analysis shall be submitted to the PROJECT MANAGER and shall include at a minimum, the following:

   a. A list of all activities sorted by Activity I.D. Number with predecessor and successor activity numbers and descriptions;

   b. Activity number and description.

   c. Activity code(s).

   d. Schedule and actual/remaining duration for each activity.

   e. Earliest start date (by calendar date).

   f. Earliest finish date (by calendar date).

   g. Actual start date (by calendar date).

   h. Actual finish date (by calendar date).

   i. Latest start date (by calendar date).

j. Latest finish date (by calendar date).

k. Float in work days.

l. Monetary value and cost-to-date of each activity.

m. Percentage of activity complete and remaining duration for incomplete activities.

n. Cumulative value of Work completed based on the CONTRACTOR'S reported portion of activities complete and accepted.

o. Imposed constraints and/or contractual milestones.

2. The following printed computer outputs shall be required as part of the Project Schedule submittal and each revision or update thereafter as a condition precedent to receipt of progress payments:

a. Activity listing sorted by I.D. number showing predecessor and successor activities in numerical order, with original and remaining duration, early start, early completion, late start, late completion and total float.

b. A sublisting of materials and equipment sorted by Specification Section number. The sublisting of materials and equipment shall include the following activities: preparation of Shop Drawings, submittal to the PROJECT MANAGER, review by the PROJECT MANAGER, and fabrication, testing, and/or delivery of material and equipment which shall be interfaced with the earliest start date that the material or equipment is to be installed on the project.

c. Activity sort(s) by organizational responsibility, including submittals to the PROJECT MANAGER for all major items or material and equipment, the number of shifts, crew sizes of each craft and construction equipment to accomplish the activity;

3. Outputs 1 and 2, above, shall show all activities, including restraints, for the duration of the project.

H. Approval Of Baseline Project Schedule

1. The Project Schedule network diagram and computer tabulations, the Cash Flow Projection, and the Manpower and Equipment Requirements Forecast shall be submitted to the PROJECT MANAGER for approval in the following quantities:

a. **Three (3)** sets of the Network Diagram and Master Bar Chart Summary Schedule.

b. Computer tabulations, Predecessor/Successor Report (three (3) copies, 8 1/2" x 11" in size).

c. Manpower Requirements Forecast (three (3) copies, 8 1/2" x 11" in size).

d. Cash Flow Projection (three (3) copies, 8 1/2" x 11" in size).

e. All required reports specified in F and G of this Section (three (3) copies).

f. Three (3) CD's with appropriate job title, data date, and date of submittal shall be labeled on them.

g. Written confirmation of concurrence of all major trade Subcontractors and Suppliers.

2. Approval Process:

a. The PROJECT MANAGER shall approve or disapprove, in writing, the CONTRACTOR'S submission within twenty one (21) calendar days after receipt of all required information. The Project Schedule, once approved, becomes the Baseline Record Schedule which shall be used for monitoring and evaluating all facets of Contract performance, including, but not limited to; progress, changes, and delays, and shall be referred to as the Record Schedule.

b. The CONTRACTOR, the CONTRACTOR'S Construction Scheduler, and those major trade Subcontractors and Suppliers, as required by the PROJECT MANAGER, shall be required to participate in all meetings necessary to reach mutual agreement and approval of the initial Project Schedule, the Manpower Requirements Forecast, and the Cash Flow Projection.

c. The CONTRACTOR shall revise the schedule, as required by the PROJECT MANAGER, to reflect project construction. If any of the required submissions are returned to the CONTRACTOR for corrections or revisions, they shall be resubmitted along with a new CD and a hard copy listing of each change (Claim Digger report) for approval within seven (7) calendar days after receipt. Resubmittals shall be as required in H.1 and H.2 of this Section. Review and response by the PROJECT MANAGER shall be given within **seven (7) calendar days** after receipt of each new submission.

d. Should the Baseline Project Schedule, submitted for approval, show variances from the requirements of the Contract, the CONTRACTOR shall make specific mention of such variations in the letter of transmittal, in order that, if accepted, proper adjustments to the Project Schedule can be made. Otherwise, the CONTRACTOR will not be relieved of the responsibility for executing the Work in strict accordance with the requirements of the Contract Documents.

e. Submittal and approval of the initial Detailed Project Schedule, the Manpower Requirements Forecast, the Cash Flow Projection, major trade Subcontractor and Supplier confirmation in writing, or CD(s), within the time prescribed, or revisions thereof within the required time, is a condition precedent to the issuance and payment of progress payments.

f. Failure of the CONTRACTOR to submit the Baseline Project Schedule, or any required resubmittals, in a timely, accurate manner and in accordance with the requirements of this Section will result in costs to the CITY which are difficult if not impossible to determine; therefore, the CONTRACTOR

shall pay the CITY liquidated damages in the amount of $300 per calendar day, for every work day the schedule submittal, revision, or resubmittal is late. This amount shall be subtracted from any monies due and shall be forfeited by the CONTRACTOR.

I. Revisions To Approved Baseline Project Schedule

1. The CONTRACTOR shall execute the Work in accordance with the approved Baseline Project Schedule. Out of sequence construction, defined as a change in the Project Schedule, requires prior approval of the PROJECT MANAGER as defined below.

2. Upon approval of a Time Impact Analysis the change shall be reflected in the next schedule submittal by the CONTRACTOR.

3. No change (except for resubmittals) to the approved Baseline Project Schedule or the Record Schedule shall be made without the prior written approval of the PROJECT MANAGER. If the CONTRACTOR desires to make a change to the approved Baseline Project Schedule, the CONTRACTOR shall request permission from the PROJECT MANAGER in writing, stating the reasons for the change as well as the specifics, such as revisions to activities, logic, durations, etc. The PROJECT MANAGER will provide a response within five (5) calendar days. Actual status and/or forecast dates for revised submittals shall be added without prior acceptance by the PROJECT MANAGER. They are still subject to review by the PROJECT MANAGER.

4. If the PROJECT MANAGER considers a schedule change to be of a major nature, the PROJECT MANAGER may require the CONTRACTOR to revise and submit for acceptance all of the affected portion(s) of the Project Schedule including an analysis to show the effect on the entire project. The proposed revision and analysis shall be submitted to the PROJECT MANAGER within fifteen (15) calendar days after the PROJECT MANAGER notifies the CONTRACTOR the revision is of a major nature. A change will be considered to be of a major nature if the time estimated for an activity or sequence of activities is varied from the original plan to the degree that there is reasonable doubt that the Contract completion date will be met, or if the change impacts the Work of other CONTRACTORS at the Jobsite. Changes to activities having adequate float shall be considered as minor changes, except that an accumulation of minor changes may be considered a major change when such changes affect the Contract completion date. (Activities having adequate float are activities which are not critical after the change is made.).

5. Only upon approval of a change by the PROJECT MANAGER shall it be reflected in the next schedule update submitted by the CONTRACTOR.

J. Updates To Approved Baseline Project Schedule And Progress Payments

1. Monthly Updates:

a. All updated or revised schedules shall be submitted in the same detail as the original submittal, unless modified in writing by the PROJECT MANAGER. Written confirmation of the major trade Subcontractors and Suppliers shall be required quarterly.

b. The initial updating shall be submitted within seven (7) calendar days after approval of the Baseline Project Schedule. The updating shall be cost loaded. Subsequent updates shall be submitted at the beginning of each month thereafter for the duration of the Contract. The data date shall be the first working day of the month unless otherwise directed by the PROJECT MANAGER. The Project Schedule and computer tabulations shall be reviewed by the CONTRACTOR'S Construction Scheduler at a joint update meeting with the PROJECT MANAGER and the INSPECTOR.

2. Monthly Updated Schedules:

a. The CONTRACTOR shall submit the Monthly Update Schedule to the PROJECT MANAGER each month, on a date assigned by the PROJECT MANAGER. The proposed update schedule prepared by the CONTRACTOR shall include all information available as of the cutoff date established by the PROJECT MANAGER. A detailed list of all proposed schedule changes (logic, duration, status, additions, and deletions) shall be submitted with the update (Claim Digger report). Prior to the monthly update review meeting, the CONTRACTOR shall obtain from his Subcontractors, Suppliers, and staff the necessary information as required to reflect progress to date. A proposed Monthly Update Schedule containing the information set forth below shall be available for review at the meeting.

1) For activities started and/or completed during the previous period: Actual start and actual completion dates, and number of shifts used to accomplish the activity.

2) For activities begun but not yet complete to date: Remaining duration of the Work, estimated percent complete, and estimated completion date. The schedule shall be calculated using remaining durations and progress override.

3) For activities not yet started: Estimated start dates, revised duration's, and estimated completion dates, as necessary.

4) For authorized Change Orders, including Emergency Change Orders, Time and Material Change Orders, and Unilateral Change Orders: Revised and original activities, number of shifts, crew sizes by craft, construction equipment required, cost, and durations, and status of all outstanding Notices of Non-Compliance, where required.

5) The monthly update of the Network Diagram shall be for the whole project. The previous month's activities shall be reported as they actually took place and designated as complete, if actually completed, on the network diagram update.

6) The electronic file of the submitted Network Diagrams and the related reports shall constitute a clear record of progress of the Work from Notice to Proceed to final completion.

7) The monthly submittal to the PROJECT MANAGER shall be accompanied by [three (3)] copies of the Schedule Narrative

Report. The Schedule Narrative Report shall describe the physical progress during the report period, Plans for continuing the Work during the forthcoming report period, actions planned to correct any negative float predictions, and an explanation of potential delays and/or problems and their estimated impact on performance and the overall project completion date. In addition, alternatives for possible schedule recovery to mitigate any potential delay and/or cost increases shall be included for consideration by the PROJECT MANAGER. The report shall follow the outline set forth below:

CONTRACTOR'S Schedule Narrative Report Outline:

- CONTRACTOR'S Transmittal Letter.
- Description of problem areas.
- Current and anticipated delays:
  -Cause of the delay.
  -Corrective action and schedule adjustments to correct the delay.
  -Impact of the delay on other activities, milestones, and completion dates.
- Changes in construction sequences.
- Pending items and status thereof:
  -Permits.
  -Change Orders.
  -Time extensions.
  -Non-Compliance Notices.
- Contract completion date(s) status:
  -Ahead of schedule and number of working days.
  -Behind schedule and number of working days.
- Other project or scheduling concerns including any plant shutdowns, duration of each shutdown, and analysis of any Work to be performed during the shutdown period.
- Include reviewed and updated Network Diagram and Reports.
- Include revised Cost Loading and Cash Flow Information of this Section.
- Include substantial revisions to manpower and equipment requirements

8) The CONTRACTOR shall provide to the PROJECT MANAGER, three (3) copies of the Network Diagram, three (3) printed copies of the Predecessor/Successor Report sorted by activity number, three (3) copies of the printed list of all changes made to the

previously approved Record Schedule, and three (3) copies of the Schedule Narrative Report. The data required to provide all other scheduling reports called for in of this Section shall be provided on a CD.

3. The CONTRACTOR'S Construction Scheduler and representatives from major subcontractors and suppliers (as requested by the PROJECT MANAGER shall attend the monthly update meetings with the above data prepared in advance for each meeting to provide, as of the end of the updating period, a complete and accurate report of the current procurement schedule (in accordance with the requirements of CONSTRUCTION STATUS REPORTS of the GENERAL REQUIREMENTS), construction progress, and a depiction of how the CONTRACTOR plans to continue the Work of the project to meet all Contract completion dates. All network changes and status dates agreed to during each update meeting shall be considered as acceptable by all parties unless written notice of exception is given by an objecting party within five (5) calendar days after the update meeting. For major network changes that cannot be agreed to during an update meeting, the CONTRACTOR shall submit, in writing, such revisions for the PROJECT MANAGER'S approval prior to inserting such changes into the network. Submissions may be in the form of marked-up networks, fragments, or schedule abstracts provided they are submitted with a letter of transmittal. The submission and approval procedures for this information shall follow the same timetable described in H.2 of this Section.

4. Predicated on the results of the PROJECT MANAGER'S review of monthly submissions of the updated Project Schedule or Record Schedule and accompanying reports, the CONTRACTOR may be required to revise the Project Schedule. Conditions under which a revision will be made are as follows:

   a. When a delay in the completion of any Work item or sequence of Work items results in an indicated extension of the project completion or interim milestone dates detailed herein by ten (10) working days.

   b. When delays in submittals or deliveries or Work stoppages are encountered which make replanning, rescheduling, or resequencing of the Work necessary.

   c. When the schedule does not represent the actual execution and progress of the project.

5. Required revisions of the Monthly Update Schedules are due within five (5) calendar days of notice by the PROJECT MANAGER that a revision is required. All revisions and additions to the Project Schedule are subject to the review of the PROJECT MANAGER. No changes (except resubmittal cycles) are to be implemented in the schedule by the CONTRACTOR without the prior approval of the PROJECT MANAGER. When the Monthly Schedule Update or its required revision is approved by the PROJECT MANAGER, it then becomes the Current Record Schedule. The Current Record Schedule will be used for the period from which it is approved until its successor is submitted and approved.

6. Three (3) copies each of the Schedule Narrative Report, the updated Project Schedule (networks, and computer computations), the Cash Flow Projection, the updated network diagram, and one (1) copy of the updated CD reflecting the status

of the project agreed to at the updating meeting, shall be submitted to the PROJECT MANAGER within five (5) calendar days after each updating meeting.

7. The update report shall show the activities or portions of activities completed during the reporting period and their total value as the basis for the CONTRACTOR'S request for partial payment. Payments made pursuant to PARTIAL PAYMENTS of these GENERAL REQUIREMENTS will be based on the total value of such activities completed or partially completed after verification by the INSPECTOR. The report shall state the percentage of the Work actually complete as of the report date. If the project is behind schedule, progress along other paths with negative float shall also be reported.

8. Failure of the CONTRACTOR to submit schedule updates in a timely, accurate manner and in accordance with the requirements of this Section will result in costs to the CITY which are difficult, if not impossible to determine; therefore, the CONTRACTOR shall pay the CITY liquidated damages in the amount of $100 per calendar day for every work day the submittal is late or not in full compliance with the requirements of this Section. This amount shall be deducted from any monies due, and forfeited by the CONTRACTOR. In addition to the liquidated damages, if the CONTRACTOR fails to submit any of the update deliverables, or to meet any of the other updating requirements, progress payments will be withheld until such time as the required update information is submitted.

K. Weekly Progress Reports

1. Once each week, on a day established by the PROJECT MANAGER, the CONTRACTOR shall submit:

   a. A progress schedule listing the activities completed and in progress for the previous week and the activities scheduled for the succeeding two (2) weeks. The activity designations shall be consistent with the activity designations in the Current Record Schedule. A bar chart shall be used to display the information in pictorial form. The appropriate schedule activity number shall be listed for each bar.

L. Cost Loading and Cash Flow

1. With the initial Project Schedule submittal, each monthly update, and each revision, the CONTRACTOR shall also submit a schedule of cost loading and cash flow to the PROJECT MANAGER. There shall be a strict correlation between the sum of individual activity costs and the total values indicated for bid items. That is, each individual activity within the Project Schedule shall employ a code, which in summary, attaches its cost, if any, to the appropriate bid items. The sum of activity costs within a specific code shall equal the cost of its corresponding bid items and approved Change Orders.

2. Expected payment requests for each month shall be included with proposed updates. The cash flow shall show the net payment requests for each month. The cumulative payment requests to date shall also be shown after deducting retainage and any other monies withheld. The cash flow shall be shown in tabular format and in graphic format.

3. The CONTRACTOR, at the Preconstruction Scheduling Conference, shall explain in detail the procedure to be used to develop the schedule activity cost loading and cash flow. This procedure is subject to the review and approval of the PROJECT MANAGER and the INSPECTOR. Receipt and approval of the Schedule Cost Loading and Cash Flow Summary is a condition precedent to the making of any payments under the Contract. Therefore, failure to submit an acceptable schedule cost loading and cash flow summary shall be cause for withholding any progress payments due or that may become due under this Contract, until such time as an acceptable cost loading and cash flow summary is received.

4. In accordance with the updating procedures, when an activity is deemed substantially complete by the PROJECT MANAGER, then such activity will no longer be treated as an activity affecting the critical path or successor activities on the project. The cost of correction of any punchlist items associated with substantially completed activities will be covered by amounts deemed by the PROJECT MANAGER and the INSPECTOR to be adequate to cover such costs.

M. Responsibility For Completion

1. Whenever it becomes apparent from the current monthly updated Project Schedule that phasing, milestone, constraint, restraint, or Contract completion dates will not be met, the CONTRACTOR shall submit a plan to recover the delay using some or all of the following remedial actions;

   a. Increase construction manpower in such quantities and crafts as necessary to eliminate the backlog of work and meet the current completion date.

   b. Increase the number of working hours per shift, shifts per working day, working days per week, the amount of construction equipment, or any combination thereof to eliminate the backlog of Work.

   c. Reschedule the Work in conformance with the Specification requirements.

2. Prior to implementing any of the above actions, the CONTRACTOR shall notify the PROJECT MANAGER and obtain approval from the PROJECT MANAGER. If such actions are approved, the Project Schedule revisions shall be incorporated by the CONTRACTOR into the Network Diagram before the next update.

3. Under no circumstances will the addition of equipment or construction forces, increasing the Working hours or any other method, manner, or procedure to return to the contractually required completion date be considered justification for a Change Order or be treated as acceleration where the need for a recovery schedule has been caused by the CONTRACTOR and/or its Subcontractors or Suppliers, at any tier.

4. The PROJECT MANAGER may elect to withhold progress payments until the CONTRACTOR'S progress indicates that the milestone date(s) and/or the Contract completion date will be met.

N. Schedule Time Extensions

1. When Change Orders or delays are experienced by the CONTRACTOR and a time extension is requested, the CONTRACTOR shall submit to the PROJECT

MANAGER, a written Time Impact Analysis illustrating the influence of all changes or all delays on the current project completion date. The Time Impact Analysis shall be based on an As Built Schedule Analysis approach. The As Built Schedule that will be created will incorporate all Actual Start and Finish dates, actual durations of activities, and actual sequences of construction. This Time Impact Analysis shall incorporate all delays (including CITY, CONTRACTOR, and Third Party delays without exception) in the time frame they occurred with actual logic ties. The As Built Schedule data shall be obtained from the most recent accepted Baseline or monthly schedule update as of the time the preliminary change order, Emergency Change Order, Unilateral Change Order, or Allowance Order was issued to the CONTRACTOR. The As Built Schedule shall be created as an early start schedule. The As Built Schedule shall use the original activity durations for all incomplete work and the actual logic driving all activities. All requests for time extensions shall be based upon an analysis of this As Built Schedule. The critical path will be established and all CITY caused delays on the critical path will be identified. The time extension will be based solely upon the cumulative duration of all CITY and Third Party caused delays (as set forth in UNAVOIDABLE DELAY of the GENERAL CONDITIONS) which are on the critical path. Any time extensions to the project Interim Milestone Dates shall be non-compensable time extensions only.

2. Time extensions will be granted only to the extent that equitable time adjustments for the activity or activities affected exceed the total or remaining float along the critical path of activities at the time of actual delay, or at the time the Preliminary Change Order, the Emergency Change Order, the Unilateral Change Order, or the Allowance Order was issued to the CONTRACTOR. Float or slack time is not for the exclusive use or benefit of the PROJECT MANAGER or the CONTRACTOR but is an expiring resource available to all parties as needed to meet Contract milestones and the Contract completion date. Time extensions shall not be granted nor delay damages paid until;

   A delay occurs which is beyond the control and without the fault or negligence of the CONTRACTOR and its Subcontractors or Suppliers, at any tier; and

   Which extends actual performance of the Work beyond the applicable current Contract completion date and the most recent date predicted for completion of the project on the approved schedule update current as of the time of the delay or as of the time of issuance of the Preliminary Change Order, the Emergency Change Order, the Unilateral Change Order, or the Allowance Order was issued to the CONTRACTOR.

3. Each Time Impact Analysis shall be submitted in triplicate, within fifteen (15) calendar days after a delay occurs, or issuance of the Preliminary Change Order, Emergency Change Order, Time and Materials Change Order, or Unilateral Change Order. If the CONTRACTOR does not submit a Time Impact Analysis for a specific Change Order or delay within the specified period of time, the CONTRACTOR shall be deemed to have irrevocably waived any rights to additional time and cost.

4. Since float time within the Project Schedule and the Record Schedule is jointly owned it is acknowledged and agreed by the CONTRACTOR that CITY caused delays on the project may be offset by CITY caused time savings (including, but not limited to: critical path submittals returned in less time than allowed for in the Contract, approval of substitution requests which result in a savings of time along

the critical path for the CONTRACTOR, etc.). In such an event the CONTRACTOR shall not be entitled to receive an extension of time or delay damages until all CITY caused time savings are exceeded and the Contract completion date is also exceeded.

5. Approval or rejection of each Time Impact Analysis by the PROJECT MANAGER shall be made within **thirty (30) calendar days** after receipt of each Time Impact Analysis, unless subsequent meetings and negotiations are necessary. Upon approval, a copy of a Time Impact Analysis signed by the PROJECT MANAGER shall be returned to the CONTRACTOR for incorporation into the schedule.

6. Upon mutual agreement by both parties, fragnets illustrating the influence of Change Orders and delays shall be incorporated into the Project Schedule or Record Schedule during the first update after agreement is reached.

7. In the event the CONTRACTOR does not agree with the decision of the PROJECT MANAGER regarding the impact of a change or delay, it shall be resolved in accordance with CLAIMS AND PROTESTS of the GENERAL CONDITIONS.

O. Manpower

1. The CONTRACTOR shall submit with the Project Schedule a histogram depicting total project manpower for its own forces and for each of its Subcontractors for each month. The histogram shall be based upon and shall be in substantive agreement with the number of shifts and crew sizes in the Project Schedule and shall be updated monthly and submitted with the Monthly progress report. The update shall show actual manpower for each month during the construction period to date and required manpower for both base scope and Change Order Work each month, necessary to complete all remaining activities to insure timely project completion.

P. Construction Equipment

1. The CONTRACTOR shall submit with the initial Project Schedule a tabular report listing each major piece of construction equipment for itself and each of its Subcontractors for each month. This major equipment is the equipment that is or will be used at the Worksite. Each major piece of the CONTRACTOR'S and the Subcontractor's equipment shall be separately described, identified, and numbered in the report. The tabular report shall be based upon and in substantive agreement with the number of shifts and crew sizes by craft in the Project Schedule and shall be updated monthly and submitted with the monthly progress report. The update shall show actual construction equipment for each month during the construction period to date and the required construction equipment for each month necessary to complete all remaining activities including the Change Order Work, on the early finish date.

Q. Submittal Of "As Built" Schedule

As a condition precedent to any release of retention, the last update to the Record Schedule submitted shall be identified by the CONTRACTOR as the "As Built Schedule". The "As Built Schedule" shall reflect the exact manner in which the project was actually constructed (including start and completion dates, activities, sequences, and logic) and shall be signed and certified by the CONTRACTOR'S

Project Manager and Construction Scheduler as being a true reflection of the way in which the project was actually constructed.

(END OF SECTION)

THIS PAGE INTENTIONALLY LEFT BLANK

SECTION 01330
SHOP DRAWINGS / SUBMITTALS

1.1 THE REQUIREMENT

A. GENERAL

1. Shop Drawings and submittals shall be provided at the CONTRACTOR'S expense, when required by the Plans or Specifications, or requested by the PROJECT MANAGER. Shop drawings and submittals shall be submitted in accordance with General Requirements Section - 01116 Electronic Document Control. The CONTRACTOR shall furnish a schedule and list of all required shop drawings and submittals to the PROJECT MANAGER, in accordance to CONTRACTOR'S CONSTRUCTION SCHEDULE AND REPORTS of these GENERAL REQUIREMENTS, including required shop drawings and submittals by all Subcontractors. Submittals and Shop Drawings, including administrative submittals, may be required by any of the contract documents, including, but not limited to, the General Conditions, General Requirements, Standard Specifications for Public Works Construction ("Green Book") or the Caltrans Standard Specifications as determined by the PROJECT MANAGER.

2. CONTRACTOR'S shop drawings and submittals, including administrative submittals, required for performance of Contract Work, shall include, but are not limited to, the following:

a. Schedule of Values for Lump Sum items

b. Construction Schedules

c. Daily Construction Reports

d. Bridge Falsework Shop Drawings and Structural Calculations.

e. Manufacturer's Data and Specifications

f. Samples

g. Temporary Shoring Plans

h. Certificates of Compliance

i. Construction Photographs

j. Substitution Requests

k. Record Drawings and Record Project Manual

l. Operation & Maintenance Manuals

m. Stock Materials, Spare parts, tools

n. Material Testing Results

o. Daily Statements of time & materials Change Order
p. Copies of Notice-To-Correction or Notice of Non-Compliance from governing authorities.

q. Maintenance Logs and Maintenance Schedule.

r. Mix Designs (Asphalt Concrete, Portland Cement Concrete, grout, etc.)

s. Payment Requests

t. Notices of Materials to be Used (if Caltrans forms are required)

u. Storm Water Pollution Prevention Plan (SWPPP)

v. Solid Waste Resource Management Forms

w. Required Written Warranties/Guarantees.

x. Work Erection Sequences

3. Materials shall not be furnished or fabricated, nor any Work done for which Shop Drawings or submittals are required, before those Shop Drawings or submittals have been reviewed, as provided in this Section. Neither review nor approval of Shop Drawings or submittals by the PROJECT MANAGER shall relieve the CONTRACTORS from responsibility for errors, omissions, or deviations from the Contract Documents, unless such deviations were specifically called to the attention of the PROJECT MANAGER in the letter of transmittal. The CONTRACTOR shall be responsible for the correctness of the submittals and Shop Drawings, including shop fits, field connections, and results obtained by use of such drawings.

4. Unless noted elsewhere in the contract documents, the CONTRACTOR shall allow a minimum of thirty (30) working days for each review of Shop Drawings and submittals for temporary bridges, bridge falsework, or prestressing shop drawings. The CONTRACTOR shall allow a minimum of sixty (60) working days for review of bridge falsework drawings and/or prestressing shop drawings over railroads. For all other Shop Drawings and submittals, the CONTRACTOR shall allow a minimum of twenty (20) working days for each review, unless otherwise mutually agreed to by the CONTRACTOR and the PROJECT MANAGER. Review periods are not cumulative. The aforementioned time frames begin anew upon each submission of Shop Drawings and/or submittal whether it is the initial submission or a resubmission after review by the PROJECT MANAGER. Each set of Shop Drawings or submittals shall be accompanied by a letter of transmittal describing exactly what is being transmitted. The transmittal shall be cross-referenced to the Project Manual and/or Standard Specification Section Number and/or Bid Item Number as appropriate. The transmittal shall identify any deviations from the contract documents in any of the submittals or shop drawings.

5. In each Section of the Project Manual or for each Bid Item as appropriate, all required lists of material, product or equipment; manufacturer's data; and etc., shall be appropriately grouped and submitted to the CITY for review as one submittal. Piece meal submittals will not be acceptable. Any submittal with outstanding product data, manufacturer's specification or any required information shall deem to be incomplete and subject for rejection without any review. Subsequent submittal shall be considered as second submission. It is considered reasonable that the CONTRACTOR shall make a complete and acceptable submittal to the PROJECT MANAGER or Consultant by the second

submission of a submittal item. The CITY reserves the right to withhold moneys due to the CONTRACTOR to cover additional costs of the PROJECT MANAGER or Consultant's review beyond the second submittal. On the third submittal by CONTRACTOR, the CONTRACTOR will be charged $120 per hour of CITY'S or Consultant's review time and no additional Contract time shall be allowed.

6. CONTRACTOR shall appropriately package and label each submittal for transmittal and handling from CONTRACTOR to Consultant or PROJECT MANAGER using a preprinted standard transmittal form verifying that the CONTRACTOR has met the following CITY requirements:

Conformance in all respect to the Contract Document requirements.

Has reviewed and coordinated all aspects of each submitted item relative to manufacturer's product data, Specifications, etc.

Has verified with site conditions and all dimensions.

That all questions and/or comments prepared by the Consultant or PROJECT MANAGER have been reviewed and answered.

CONTRACTOR is not relieved from responsibilities for errors, omissions and any deviation in the required submittals as revealed resulting from the CITY'S or Consultant's review of such submittals.

CONTRACTOR shall add and sign the following paragraph on all submittals:

> "It is hereby certified that the **[equipment] [material] [color samples] [details]** shown and marked in this submittal is that proposed to be incorporated into the project; is in compliance with the Contract Drawings and Project Manual and can be installed in the allocated space,"

Failure to add the above written statement for compliance will result in return of submittals or shop drawings without review, and any delays caused thereby shall be the total responsibility of the CONTRACTOR.

7. Submittals and Shop Drawings will be returned to the CONTRACTOR with one of three (3) markings:

A. If copies of a submittal or shop drawing are returned to the contractor marked "NO EXCEPTIONS TAKEN/PROCEED," formal revision and resubmission of said submittal will not be required.

b. If copies of a submittal or shop drawing are returned to the CONTRACTOR marked "MAKE CORRECTIONS NOTED/PROCEED CONDITIONALLY" formal revision and resubmission of said submittal will not be required

c. If a submittal or shop drawing is returned to the CONTRACTOR marked "REJECTED-RESUBMIT/DO NOT PROCEED", the CONTRACTOR shall revise said submittal and shall resubmit all six copies of said revised submittal to the PROJECT MANAGER.

Revisions indicated on submittals shall be considered as changes necessary to meet the requirements of the Contract Documents and shall not be taken as the basis for claims for extra work.

The CONTRACTOR is advised that the CITY may delegate submittal review to third parties such as Consultants or Caltrans. The PROJECT MANAGER may require the CONTRACTOR to address the comments from third parties.

B. Shop Drawings

1. Shop Drawings shall be prepared in accordance with current modern engineering practice and shall be of a size and scale to clearly show all necessary details. Shop Drawings shall show in detail the size, sections, and dimensions of all the member(s); the arrangement and construction of all connections and joints; all holes, straps, and other fittings required for attaching work and other pertinent details. When required, engineering computations shall be submitted. The CONTRACTOR shall be responsible for delivering reviewed copies of shop Drawings to all others whose work is dependent thereon. The CONTRACTOR shall maintain at the site of the Project, at all times, a complete file of approved Shop Drawings and manufacturers' data for this Project.

2. Each Shop Drawing shall be submitted in accordance with GENERAL REQIREMENTS Section 01116 – ELECTRONIC DOCUMENT CONTROL.

3. Layout diagrams or schedules are required for pipelines utilizing pipe materials conforming to the indicated subsections. The diagrams or schedules shall be submitted for reference only, except curve layouts are required for approval.

4. The diagram shall be of a size and scale to show clearly all necessary details. Pipeline layouts, for reference only, may be submitted in tabulated form in increasing order of alignment stationing.

5. All Shop Drawings shall be provided with dimensions and measurements verified at the site as stated hereinbefore. If the CONTRACTOR decides to submit the dimensions and measurements at a later time, the CONTRACTOR must state the reason, for the PROJECT MANAGER'S approval, why the dimensions and measurements cannot be taken. If approval is granted, the CONTRACTOR shall re-submit the approved submittal with the final dimensions and measurements after the Works are completed. The CONTRACTOR is not relieved from the responsibilities of error and omission, or any problem that may arise during the fabrication or installation.

C. Submittals

1. Submittals shall consist of the appropriate combination of catalog sheets, material lists, manufacturer's brochures, technical bulletins, specifications, diagrams, certificates of compliance, or product samples, necessary to describe a system, product, or items. Submittals for systems shall be bound together and include all manufactured items for the system. Each Submittal shall be submitted in accordance with GENERAL REQIREMENTS Section 01116 – ELECTRONIC DOCUMENT CONTROL.

2. Submittals are required for irrigation systems, street lighting systems, and traffic signals, concrete mix designs, asphalt mix designs, and may be required for any product, manufactured item, or system. The CONTRACTOR is advised that multiple concrete and asphalt mix designs may be necessary if the Contract Documents require mix designs that comply with both “Green Book” and Caltrans specifications.

3. Certificates of Compliance for any item furnished according to Caltrans Standard Specifications shall comply with Caltrans Standard Specification 6-1.07, “Certificates of Compliance”.

(END OF SECTION)

THIS PAGE INTENTIONALLY LEFT BLANK

SECTION 01520
CONSTRUCTION FACILITIES

1.1 THE REQUIREMENT

A. General

1. All facilities provided for CITY personnel shall be at suitable locations approved by the PROJECT MANAGER. Such facilities must be in a room, building, or trailer provided for this purpose with acceptable means of locking.

2. A Class "A" Field office, in accordance with the requirements herein, shall be provided at any offsite plant facility furnishing pipe subject to CITY inspection during manufacture. A Field Laboratory, in accordance with the requirements herein described, shall be provided at any offsite or project site. plant facility furnishing portland cement, concrete or asphalt paving material. A Modified Class "B" Field Office shall be provided for CITY Construction Management Staff as specified below in Paragraph 5. Any other facilities for CITY personnel shall be provided only when required by the Specifications.

3. Offices and laboratories at plants may be used concurrently by inspection personnel of other agencies provided such use does not seriously conflict with CITY personnel. The Modified Class "B" Field Office provided for City Construction Management Staff shall not be a shared facility.

4. All facilities shall conform to the applicable codes, ordinances, and regulations of the local jurisdiction, and of the State of California, and shall conform to current practice. The interior shall be paneled or suitably lined to provide a facility of good appearance.

5. The CONTRACTOR shall provide a Modified Class _"B"_ Field Office, in accordance with the requirements herein, at a location acceptable to the PROJECT MANAGER and the INSPECTOR. for use by CITY Construction Management staff

6. The CONTRACTOR shall provide janitorial and other maintenance services in all types of facilities provided. Such services shall include the supply of the appropriate paper products and dispensers. Trash receptacles shall be provide an emptied by the CONTRACTOR at weekly intervals or sooner as required. The trash shall be removed from the Project site.

7. All costs to furnish, maintain, service, and remove the specified facilities at the Project site shall be included in the price bid for such facilities. If no bid items provided in the proposal, costs shall be included in other items for which bids are entered.

8. The first Progress Payment will not be approved until all facilities are in place and fully comply with the Specifications.

B. Field Office Facilities

1. Class "A" Field Office

a. This office shall have a minimum floor space of 400 ft2, at least two doors, and window area of not less than 66 ft2). All doors and windows shall be provided with screens.

b. Furniture shall be provided as follows: two (2) plan tables, two (2) standard 1.5M (5 feet) long double-pedestal desks with a drawer suitable for holding files, two (2) chairs, one (1) drafting stool, and two (2) plan racks.

c. Electric power shall be provided to include a minimum of four (4) duplex convenience outlets. The office shall be illuminated at the tables and desk. An outdoor lighting fixture with a 300-watt bulb shall be installed

d. Heating and air conditioning of sufficient capacity shall be provided at no expense to the CITY. The CONTRACTOR shall provide drinking water within the office and integral sanitary facilities directly adjoining. Sanitary facilities shall include a toilet and wash basin with hot and cold running water.

e. Extended area, non-coin-operated telephone service shall be provided within the office area. The installation shall include sufficient extension cord to serve the plan table and desk.

2. Modified Class "B" Field Office for CITY Construction Management Staff

a. This office shall be the same as class "A" with integrated sanitary facilities. The office shall include the following:

i. Three cell phones (including all airtime and other charges) for use by City personnel during the construction period. Each cell phone is to be new and to include a desktop battery charger and an auto battery charger. Cell phones will be returned to the Contractor after substantial completion of the project and punchlist completion.

ii. A black-and-white photocopier capable of 11"x17" copies and scanning, including maintenance and repair service.

iii. The drinking water shall include hot and cold water, plus coffee service equipment.

iv. A fax machine (plain paper)

v. A second desk, a folding table, and four chairs in addition to the furniture listed above.

vi. Security satisfactory to the PROJECT MANAGER to include bars over the window(s) and a deadbolt door or padlock securing the door.

vii. One new laptop computer, one new tablet with a keyboard with access to e2020, and one printer with an Intel Pentium IV processor or approved equal, with internet access at the trailer, or other approved highspeed Internet access.

viii. One digital camera with minimum 5.0 mega pixels and 5x optical zoom capability. Rechargeable batteries and memory card, 1 gigabyte minimum

memory, which can be used with the camera, shall also be included

b. The CITY will not provide a location for the Modified Class "B" Field Office for CITY Construction Management staff. The CONTRACTOR is responsible for securing adequate space adjacent to the project site for the City's Modified Class "B" Field Office for CITY Construction Management staff. If the Contractor maintains a yard adjacent to the site, the City's Modified Class "B" Field Office for CITY Construction Management staff shall be provided within the CONTRACTOR's yard, and all security installed for the CONTRACTOR's field office (if any) shall be duplicated for the CITY's Field Office.

C. Field Laboratories

1. Offsite at Manufacturing Plant

a. Field laboratories shall conform to the requirements for a Class "C" Field Office specified hereinabove, except for the following:

1) Telephone service per that of a Class "A" office; Chair;
2) Work table: 1.2m by 3.Om (4 foot by 10 foot), 0.9m (3 feet) high;
3) Sieves per SSPWC Section 203-6; Scales and weights; Burner plate for heating samples;
4) Thermometer, with 90°C to 260°C (200°F to 400°F) degree range (Asphalt Plants only); and Air meter for all concrete in accordance with ASTM C231 of the type that indicates percentage of air directly (Precast Concrete Plants only).

b. These facilities shall be serviced and provided with necessary sanitary supplies.

c. These facilities shall be for the exclusive use of CITY personnel. However, a separate building need not be provided for this purpose if such facilities are located in a separate room in a building which includes other facilities.

D. Removal of Facilities

1. Field offices, laboratories, and bathhouse facilities at the Project site shall be removed upon completion of the Work. Buildings and equipment furnished by the CONTRACTOR at the Project site under the provisions of this Section are the property of the CONTRACTOR.

E. Basis of Payment

1. All costs incurred in furnishing, maintaining, servicing, and removing field offices, laboratories, or bathhouse facilities required at the Project site shall be included in the Bid item for furnishing such facilities. If such facilities are required by the Plans or Specifications and no bid item is provided in the proposal, the costs shall be included in other items for which bids are entered or in MOBILIZATION if a bid item is provided for laboratories at plants shall be borne by the planet owners. Payment for office facilities will be made as follows: twenty-five percent (25%) when completely installed, seventy-five (75%) prorated over the remainder of the

Contract duration.

(END OF SECTION)

SECTION 01 57 23
STORMWATER POLLUTION CONTROL MEASURES FOR CONSTRUCTION ACTIVITY

PART 1 - GENERAL

1.1 SUMMARY

A. Section Includes:

1. Stormwater pollution prevention control activities

B. Related Requirements:

1. Division 01 - General Requirements.

2. Section 33 4000 - Storm Drainage Utilities.

1.2 SUBMITTALS

A. For sites with over one acre of land disturbance Contractor shall provide a SWPPP plan.

1.3 QUALITY ASSURANCE

A. Comply with the following as a minimum requirement:

1. Standard Specifications for Public Works Construction.

2. Regional Water Quality Control Board

B. The Contractor shall exercise every reasonable precaution to protect channels, storm drains, and bodies of water from pollution.

1. Conduct and schedule operations to minimize or avoid muddying and silting channels, drains, and waters.

2. As required, obtain permits for erosion and water pollution control from the appropriate jurisdictional agency before starting work. All costs for work required for compliance with this Section shall be included within the bid Prices.

3. Provide any necessary water pollution control devices to prevent, control, and abate water pollution, and implement good housekeeping pollution control measures to reduce the discharge of pollutants from work sites to the maximum extent practicable. These water pollution control devices include drains, gutters, slope protection blankets and retention basins and shall be constructed concurrently with other Work at the earliest practicable time.

4. Exercise care in preserving vegetation and protecting property, to avoid disturbing areas beyond the limits of the work. Promptly repair any damage caused by Contractor operations.

5. Comply with the specific requirements based on acreage of disturbed soil.

6. Penalties: Failure to comply with this Section may result in significant fines and possible imprisonment. The RWQCB or other prosecuting authority may assess fines of up to $32,500

per day for each violation. Should the City be fined or penalized as a result of the Contractor failing to comply with this Section, the Contractor shall reimburse the City for any and all fines, penalties and related costs.

7. Notification and Report: If pollution occurs in the work area for any reason or when the Contractor becomes aware of any violation of this Section, correct the problem and immediately notify the Inspector. In addition, submit a written report to the Engineer within seven (7) calendar days describing the incident and the corrective actions taken. If either the Inspector or Engineer is first to observe pollution or a violation, the Contractor shall also explain in the written report why the Work was inadequately monitored.

8. The provisions of this Section describe minimum compliance and do not preclude other more stringent stormwater pollution control measures that may be required in the Contract.

1.4 DEFINITIONS

A. Construction Activity: Includes clearing, grading, excavation, stockpiling, and reconstruction of existing facilities involving removal and replacement. Construction activity does not include routine maintenance such as, maintenance of original line and grade, hydraulic capacity, or original purpose of the facility.

B. LRP: Legally Responsible Person

C. PRD: Permit registration Document

D. QSD: Qualified SWPPP Developer

E. QSP: Qualified SWPPP Practitioner

F. RWQCB: Regional Water Quality Control Board

G. SMARTS: Stormwater Multiple Application Tracking System

H. SWPPP: Stormwater Pollution Prevention Plan

PART 2 – PRODUCTS (NOT USED)

PART 3 - EXECUTION

3.1 PROJECTS HAVING MORE THAN ONE ACRE OF DISTRUBED SOIL

A. Projects with construction activity that will result in one acre or more of disturbed soil, or less than one acre but part of a larger common plan of development, the Contractor shall comply with the requirements included in Section 1 above, and the following requirements:

1. The Contractor shall comply with General Permit 2009-0009-DWQ for Discharges of Storm Water Associated with Construction Activities (General Permit). A copy of the General Permit may be downloaded from the California State Water Resources Control Board (SWRCB) website using the following link:

http://www.waterboards.ca.gov/waterissues/programs/stormwater/ construction.shtml.

2. The Contractor shall provide a SWPPP Developer (QSD) to prepare all PRDs, as defined in the General Permit. All PRDs must be uploaded to the RWQCB's General Permit web application called the SMARTS prior to commencement of construction activities. The SMARTS website link is:

   http://smarts.waterboards.ca.gov/ smarts/faces/SwSmartsLogin.jsp.

   The PRDs include the Notice of Intent, Risk Assessment, Post-Construction Calculations, Site Map, SWPPP, and the first annual fee. The Contractor shall calculate the estimated permit fee using the fee schedule on the RWQCB website which is based on the total disturbed area. The Contractor must submit the prepared SWPPP to the City for review and approval prior to uploading it to the SMARTS system. Upon City approval, the SWPPP shall be uploaded by the Contractor and certified by the City's LRP. At that time, the actual fee invoice will be provided by the City to the Contractor and the Contractor will submit payment to the State for the first annual fee. The Contractor is also responsible for all subsequent annual fees for this project.

3. The Contractor's QSD shall complete the Risk Level analysis as per the General Permit and insert the proper risk level. The Contractor shall comply with all visual monitoring, effluent water quality sampling, reporting, and record keeping requirements associated with this Risk Level, in accordance with the General Permit. For projects with Risk Level 2 or Risk Level 3, the Contractor must prepare and implement a Rain Event Action Plan, as described in the General Permit.

4. The Contractor shall provide a SWPPP Practitioner (QSP) to implement all SWPPP requirements at the project site and monitor the effectiveness of the SWPPP, in accordance with the General Permit.

5. The Contractor shall prepare the Annual Report required by the General Permit and submit it to the City for review and approval by August 1st of each year. The City's LRP will certify the Annual Report.

6. The Contractor shall provide and submit all reports and data necessary to complete the Notice of Termination at the Completion of the Work, in accordance with the General Permit.

END OF SECTION

THIS PAGE INTENTIONALLY LEFT BLANK

IV. TECHNICAL SPECIFICATIONS

GRANADA HILLS PARK
POOL AND BATHHOUSE REPLACEMENT
PROJECT

PREPARED BY:

Sparano + Mooney Architecture

June 22, 2021

ENGINEERING
CITY OF LOS ANGELES

THIS PAGE INTENTIONALLY LEFT BLANK



©2021 AWC WEST. All rights reserved.

Reproduction of this document in any form without prior written permission of AWC WEST is prohibited. For more information contact:



AWC WEST
24990 Greensbrier Drive
Stevenson Ranch, CA 91381
p: 661.287.4211 f: 775.252.0145

Email us at info@awcwest.com
Post a comment on our blog at www.awcwest.com
Tweet us at twitter.com/awcwest
Friend us on Facebook at facebook.com/pages/awc-west/105069230176

THIS PAGE INTENTIONALLY LEFT BLANK

TABLE OF CONTENTS

DIVISION	SECTION TITLE
DIVISION 1	
DIVISION 2 - SITE CONSTRUCTION	
02 22 20	SITE DEMOLITION
02 41 19	SELECTIVE DEMOLITION
02 4120	SELECTIVE BUILDING DEMOLITION
02 82 13	ASBESTOS & LEAD-BASED PAINT ABATEMENT
DIVISION 3 - CONCRETE	
03 1000	CONCRETE FORMWORK
03 1513	WATERSTOPS
03 2000	CONCRETE REINFORCEMENT
03 3000	CAST-IN-PLACE CONCRETE
03 3290	JOINTS IN CONCRETE
03 3510	CONCRETE FLATWORK FINISHING AND CURING
03 5416	HYDRAULIC CEMENT UNDERLAYMENT
DIVISION 4 – MASONRY	
04 0120	MASONRY RESTORATION AND CLEANING
04 2200	CONCRETE UNIT MASONRY
DIVISION 5 - METALS	
05 0512	HOT-DIP GALVANIZING
05 0513	SHOP-APPLIED STEEL PRIMER
05 0523	METAL FASTENINGS
05 1200	STRUCTURAL STEEL
05 3000	METAL DECKING
05 4000	COLD-FORMED METAL FRAMING
05 5000	METAL FABRICATIONS
05 5500	STAIR TREADS AND NOSINGS
05 7300	DECORATIVE METAL RAILINGS
05 7800	METAL FABRIC
DIVISION 6 - WOOD AND PLASTICS	
06 1000	ROUGH CARPENTRY
06 1053	MISCELLANEOUS ROUGH CARPENTRY
06 1813	GLUE-LAMINATED BEAMS
06 4123	SOLID PHENOLIC CORE CASEWORK
DIVISION 7 - THERMAL AND MOISTURE PROTECTION	
07 1113	BITUMINOUS DAMPPROOFING
07 1900	WATER REPELLENTS
07 2150	BUILDING ENCLOSURE INSULATION
07 2513	SHEET WEATHER-RESISTIVE BARRIERS
07 3113	ASPHALT SHINGLES
07 5419	PVC ROOFING
07 6200	SHEET METAL FLASHING AND TRIM
07 6526	SASM FLASHING
07 9200	JOINT SEALANTS
DIVISION 08 - OPENINGS	
08 1213	STANDARD HOLLOW METAL FRAMES

08 1313 STANDARD HOLLOW METAL DOORS
08 3116 ACCESS PANELS
08 4113 ALUMINUM-FRAMED ENTRANCES AND STOREFRONTS
08 7100 DOOR HARDWARE
DOOR SCHEDULE
CATELOG CUTS
08 8100 GLASS GLAZING
08 9113 FIXED LOUVERS

DIVISION 9 - FINISHES
09 0516 PREPARATION OF CONCRETE SUBSTRATES FOR FINISH FLOORING
09 2216 LIGHTGAGE METAL FRAMING
09 2238 CEMENT PLASTER BASE
09 2443 POLYMER-MODIFIED PORTLAND CEMENT PLASTERING
09 2514 ACRYLIC PLASTER FINISH
09 2516 INTERIOR PLASTER FINISH
09 2814 CEMENTITIOUS TILE BACKING BOARD
09 2900 GYPSUM BOARD
09 3000 TILING
09 5113 ACOUSTICAL PANEL CEILINGS
09 6713 MECHANICAL ROOM COATING
09 8133 ACOUSTICAL INSULATION, SEALANTS, AND ACCESSORIES
09 9100 PAINTING
PAINT PRODUCTS SCHEDULE
09 9623 GRAFFITI-RESISTANT COATINGS
09 9656 EPOXY COATINGS
09 9713 HIGH PERFORMANCE STEEL COATINGS
09 9723 PENETRATING CONCRETE FLOOR SEALER

DIVISION 10 - SPECIALTIES
10 1413 REGULATORY SIGNAGE
10 2113 TOILET COMPARTMENTS
10 2133 CUBICLE CURTAINS AND TRACK
10 2813 COMMERCIAL TOILET ACCESSORIES
10 2814 COMMERCIAL SHOWER ACCESSORIES
10 4116 EMERGENCY KEY VAULTS
10 5129 SOLID PHENOLIC CORE LOCKERS
10 5743 BAG CHECK RACKS

DIVISION 11 - EQUIPMENT (NOT USED)

DIVISION 12 - SPECIALTIES
12 3617 STAINLESS STEEL COUNTERTOPS

DIVISION 13 - SPECIAL CONSTRUCTION
13 1100 SWIMMING POOL GENERAL REQUIREMENTS
13 1101 SWIMMING POOL EXCAVATION
13 1102 SWIMMING POOL CONCRETE
13 1103 SWIMMING POOL SHOTCRETE
13 1104 SWIMMING POOL CERAMIC TILE
13 1106 SWIMMING POOL EQUIPMENT
13 1107 SWIMMING POOL MECHANICAL
13 1108 SWIMMING POOL ELECTRICAL
13 1155 SWIMMING POOL PAINTING

DIVISION 14 - CONVEYING EQUIPMENT (NOT USED)

DIVISION 21 - FIRE SUPPRESSION

21 1313 FIRE-SUPPRESSION SPRINKLER SYSTEM

DIVISION 22 - PLUMBING
22 0500 COMMON WORK RESULTS FOR PLUMBING
22 0513 BASIC PLUMBING MATERIALS AND METHODS
22 0553 PLUMBING IDENTIFICATION
22 0700 PLUMBING INSULATION
22 1000 PLUMBING

DIVISION 23 - HEATING, VENTILATING, AND AIR CONDITIONING (HVAC)
23 0500 COMMON WORK RESULTS FOR HVAC
23 0513 BASIC HVAC MATERIALS AND METHODS
23 0548 HVAC SOUND, VIBRATION, AND SEISMIC CONTROL
23 0553 HVAC IDENTIFICATION
23 0593 TESTING ADJUSTING AND BALANCING FOR HVAC
23 0700 HVAC INSULATION
23 0800 HVAC SYSTEMS COMMISSIONING
23 0813 ENVIRONMENTAL CONTROLS AND ENERGY MANAGEMENT SYSTEMS COMMISSIONING
23 0900 HVAC INSTRUMENTATION AND CONTROLS
23 0923 ENVIRONMENTAL CONTROLS AND ENERGY MANAGEMENT SYSTEMS
23 3000 AIR DISTRIBUTION
23 8000 HEATING, VENTILATING, AND AIR CONDITIONING EQUIPMENT

DIVISION 25 - INTEGRATED AUTOMATION (NOT USED)

DIVISION 26 - ELECTRICAL
26 0500 COMMON WORK RESULTS FOR ELECTRICAL
26 0513 BASIC ELECTRICAL MATERIALS AND METHODS
26 0519 LOW VOLTAGE WIRES (600 VOLT AC)
26 0526 GROUNDING AND BONDING
26 0533 RACEWAYS, BOXES, FITTINGS, AND SUPPORTS
26 2200 LOW-VOLTAGE TRANSFORMERS
26 2416 PANELBOARDS AND SIGNAL TERMINAL CABINETS
26 2419 MOTOR CONTROL DEVICES
26 3100 PHOTOVOLTAIC SYSTEM
26 5000 LIGHTING

DIVISION 27 - COMMUNICATIONS (NOT USED)

DIVISION 28 - ELECTRONIC SAFETY AND SECURITY (NOT USED)

DIVISION 31 - EARTHWORK
31 1000 SITE CLEARING
31 2200 GRADING
31 2316 EXCAVATION AND FILL FOR PAVING
31 2319 EXCAVATION AND FILL FOR STRUCTURES
31 2323 EXCAVATION AND FILL FOR UTILTIES
31 2326 BASE COURSE

DIVISION 32 - EXTERIOR IMPROVEMENTS
32 0117 ASPHALT PAVEMENT REPAIR
32 1216 ASPHALT PAVING
32 1236 SEAL FOR BITUMINOUS SURFACING
32 1313 SITE CONCRETE WORK
32 3119 FABRICATED DECORATIVE METAL FENCES AND GATES
32 8400 LANDSCAPE IRRIGATION

32 9000 PLANTING
32 9119 LANDSCAPE GRADING

DIVISION 33 - UTILITIES
33 1100 SITE WATER DISTRIBUTION UTILITIES
33 3000 SITE SANITARY SEWER UTILITIES
33 4000 STORM DRAINAGE UTILITIES

APPENDIX

GEOTECHNICAL REPORT DATED 8-22-17
SUPPLEMENTAL GEOTECHNICAL REPORT DATED 10-25-18
SUPPLEMENTAL GEOTECHNICAL REPORT DATED 2-18-20
ASBESTOS AND LEAD-BASE PAINT SURVEY REPORT DATED 2-8-19
RAP TREE PROTECTION GUIDELINES
WOOD FRAMING INSPECTION – REPORT SER171212

END OF TABLE OF CONTENTS

DIVISION 01

DIVISION 02

EXISTING CONDITIONS

02 22 20
SITE DEMOLITION

PART 1 - GENERAL

1.1 SUMMARY

A. This section covers all wrecking and demolition, together with the removal and disposal of items.

B. Related requirements:

1. Division 01 - General Requirements.

2. Section 31 1000 – Site Clearing

3. Section 32 0190 – Tree preservation

1.2 SUBMITTALS

A. Shop Drawings: Submit site plan indicating extent of site demolition.

B. Existing conditions: Documentation of existing trees and plantings, adjoining construction, and site improvements that establishes preconstruction conditions that might be misconstrued as damage caused by site clearing.

1. Use sufficiently detailed photographs or videotape

2. Include plans and notations to indicate specific wounds and damage conditions of each tree or other plants designated to remain.

C. Contractor shall be responsible for obtaining all necessary permits, approvals and Construction Manager's authorization for disposal of material resulting from clearing and grubbing operations in areas not already specified in the contract documents.

1.3 QUALITY ASSURANCE

A. Requirements of Regulatory Agencies:

1. Traffic Obstruction: Do not close, obstruct, or store material or equipment in streets, sidewalks, alleys or passageways without a permit in accordance with all local ordinances, regulations and codes.

B. Environmental Requirements:

1. Ground and Surface Water: After the existing buildings or structures have been removed, protect the resulting building excavation or open area from surface or ground water. Promptly remove any water which accumulates in the excavation or opening. The method of dewatering and the disposal of the water is subject to review by the City engineer.

C. Workmanship

1. Demolition Work: Execute in an orderly and careful manner with due consideration for neighbors and the public. Execute the work to insure adjacent properties and the public against damages incurred by falling debris or other causes.

2. Masonry: Demolish in small sections and brace and shore where necessary to avoid collapse of the structure.

3. Burning of Materials: Burn no materials or debris on the premises.

4. Dust control: Constantly sprinkle all rubbish and debris to lay down the dust.

5. Traffic: Conduct operations with minimum interference with roads, streets, driveways, alleys, sidewalks and other facilities.

B. Protection:

1. General Requirements: Protect persons and property in accordance with the General Conditions. Remove all temporary construction upon completion of the Project.

a. Temporary Barricade Fence on all sides of the property except where existing buildings are on the property line or where a sidewalk shed is specified, erect an 8 foot high fence built solid for its entire length and height, except for such openings as doors, necessary for the proper prosecution of the work.

b. Temporary protective fence: Provide before beginning any excavation or construction work at the site, erect a temporary protective fence around the excavation. Erect a 4 foot high fluorescent orange temporary protective fence secured to posts not more than 8 feet.

2. Existing structures and property: Take precautions to guard against movement or settlement of adjacent buildings or structures. Provide and place bracing or shoring as necessary or proper in connection therewith. Be responsible for safety and support of such buildings and structures. Be liable for any movement or settlement, any damage or injury caused thereby or resulting therefrom. If at any time safety of any adjacent buildings or structures appears to be endangered, cease operation, take precautions to support such buildings or structures and notify the Architect. Resume operations only after permission has been granted. If the Architect considers additional bracing or shoring necessary to safeguard, or prevent movement or settlement, install such bracing or shoring upon Architect's order. If the Contractor fails to comply promptly with such order, such bracing and shoring may be placed by the Owner at the Contractor's expense.

PART 2 - NOT USED

PART 3 EXECUTION

3.1 INSPECTION

A. Condition of Premises:

1. Accept the premises as found and clear the site as specified. The City assumes no responsibility for condition of buildings on site at time of proposal or continuation of

conditions thereafter. Assume risk regarding damage or loss, whether by reason of fire, theft, or other casualty or happening to specified buildings.

3.2 PREPARATION

A. Utilities:

1. Prior to disconnecting, removing, plugging or abandoning existing utilities serving the buildings being removed, notify all utility corporations, companies, individuals or local authorities concerned with the work.

3.3 DEMOLITION

A. Buildings and Other Items. Wreck, demolish, dismantle and completely remove all buildings, items, and obstructions as shown on the drawings or called out in these specifications. Remove any existing rubbish, trash and junk and leave the site clear of such materials. Remove all foundations completely. Remove all basement and cellar floors and other concrete slabs.

a. Dust Retention. In demolishing masonry walls, etc., keep work wet down thoroughly to prevent dust and dirt from rising. Provide necessary water, waterlines and connections for this purpose.

B. Walks and Drives: Where indicated on the drawings, remove pavement, curbs and sidewalks to full depth, take care to avoid damage to adjacent remaining pavement or sidewalks. Make cuts in such a manner that a clean vertical joint remains.

C. Utilities: Disconnect electrical service and/or cut off and cap gas, water and sewer services at the mains on the property or in the street as required by the responsible utility company, or local authority or relocate as shown on the drawings. Remove and cut off and plug or cap all utilities within the existing building areas, except those designated to remain. The Contractor shall coordinate the removal work with the relocation and/or new work being performed by all contractors.

3.4 CLEANING

A. Temporary Structures: Remove all temporary structures when they are no longer required.

B. Removal. Unless otherwise noted or specified to be relocated or stored, all materials are to be completely removed from the site by the Contractor. Do not store or permit debris to accumulate on the Site. If the Contractor fails to remove excess debris promptly, the City reserves the right to cause same to be removed at Contractor's expense.

C. Repair: Clean up, repair, or replace at no cost to the City, all property damaged by reason of required work, including restoring all disturbed areas, surfaced and unsurfaced, to their original condition on completion of the work. All patchwork shall match existing and be performed in a neat and workmanlike manner by craftsmen skilled in the trade involved. Painted surfaces shall be painted to match the adjacent areas. In newly graded areas take every precaution and temporary measures necessary, such as temporary seeding, to prevent damage from erosion of freshly graded areas. Where any settlement or washing may occur prior to acceptance of the work, repair and re-establish grades to the required elevations and slopes at no additional cost to the City. This applies to damage to the newly graded areas within the construction limits and damage to adjacent properties by eroded material.

END OF SECTION

SECTION 02 41 19
SELECTIVE DEMOLITION

PART 1: GENERAL

1.1 SCOPE

A. Clearing and removals as indicated on the drawings and specified herein including but not limited to the following:

1. Protection of existing elements and landscape to remain
2. Temporary partitions and barricades
3. Removal of items noted on plans
4. Stump Grinding

B. Provide the City with a fencing and tree protection plan, and temporary tree irrigation plan for approval prior to the start of demolition.

C. Related work specified elsewhere:
1. Grading
2. Planting Irrigation
3. Landscape Planting
4. Protection of Trees, see Appendix

1.2 REFERENCE STANDARDS

A. “Standard Specifications for Public Works Construction” latest edition and amendments thereof.

B. Industrial Safety Orders of the State of California, Division of Industrial Safety.

1.3 GENERAL PROVISIONS

A. Field conditions: Take into consideration as necessary work all obvious existing conditions and installations on the site as though they were completely shown or described. Accept the site of the work as it exists and clear obstructions to the work shown. Field verify actual locations and tag trees to be removed prior to City approval and actual removal of tree to avoid errors.

B. Examine the site and all conditions and limitations thereon and thereabouts. Take into account all such existing conditions and limitations whether or not the same are specifically shown or mentioned in any of the contract documents and include whatever is needed to complete the work in every part as shown, described, or reasonably required or implied to attain the completed condition contemplated by the contract.

C. Include the reworking of abutting surfaces as required to make new work join and match existing surfaces to remain.

D. Reference drawings may not accurately depict placement of utilities such as water, gas, waste, irrigation, vents, vaults and boxes, and electrical wire conduits on site. Contractor is responsible for any damage done to the existing utilities and damage shall be repaired at the Contractor’s expense. Contractor to notify the City 24 hours in advance to inspect and approve any repairs prior to backfilling.

E. Limits of the Work: The indicated items of demolition are not to be construed by the Contractor as a complete list of all the demolition work, but as a guide to the main areas of work involved. Other demolition shall be carried out by the Contractor, at the direction of the City where it is required to complete the project and carry out the intent of the Contract Documents.

1.4 PROTECTION

A. Barricades: Furnish and install a minimum 6' high construction fence to protect public and workmen. Fence shall enclose entire construction area and shall be left in place until removed by contractor after completion of construction.

B. Warning Signs: Adequate warning signs, lanterns, lighting, etc. for vehicular and personnel protection shall be provided and maintained during the period of work as required by applicable safety ordinances.

C. Utilities: preserve in operating condition, unless otherwise noted, all active utilities traversing project site. Repair damage to such utilities caused by work under this contract to satisfaction of owning utility company or agency.

D. Existing work to remain: Provide such forms of protection as may be necessary to prevent damage to existing work and items to remain.

1.5 SITE UTILIZATION

A. Confining of activities: Confine operations to areas indicated so as not to interfere with the functional operation of the street and vehicular traffic.

B. Traffic and site entry: Confine equipment and employee traffic pattern designated entry or exit gates as directed by the City.

C. Storage area: Equipment and materials shall be stored on the site or in a secured storage area as designated by the City. Do not store construction materials under canopies of existing trees to remain.

PART 2: PRODUCTS

2.1 MATERIALS

A. As necessary for the proper completion of this work.

PART 3: EXECUTION

3.1 GENERAL

A. Verify all items and extent of removal of all items indicated for removal with the City before processing.

B. Reduce or elevate grade of planters and all areas of site work where new construction and/or planting occurs as necessary to accommodate cobble mulch, mulch, topsoil, or turf grass. Meeting grade will be micro-area specific. All planting area grades must be approved by owner or owner representative.

C. Refer to Appendix, Protection of Trees.

3.2 METHODS

A. Within the limits of the construction area, on-site and off-site, clear and remove from the premises all trees specifically indicated for removal per plan, grass, brush, decayed vegetable matter, trunks, large roots, asphalt concrete and concrete pavements, concrete footings and slabs, base material and all other material indicated for removal on plans.

B. Refill depressions excavated below grade for the removal of objectionable materials with suitable materials compacted to a relative density of 90% or more in accordance with ASTM D1557-70.

C. Refill any depression within the park to re-establish a grade 3” below the top of planter, or other adjacent surface with suitable growing soil medium. Refill after soil settling and watering

as necessary to meet requirements. Turf areas will require backfill with suitable topsoil to grade prior to reseeding.

D. Concrete and bituminous surfacing to be removed shall be removed to the limits indicated or required, and shall be disposed of off the site. All cutting shall be done to a neat and even line with proper tools or a concrete cutting saw. Any concrete broken beyond the indicated limits shall be removed to the nearest joint or score line and then replaced with new concrete to match the existing at the Contractor's expense.

E. Crushed Concrete:

1. Break up and completely remove all existing concrete surfacing, curbs, gutters, walks and bituminous surfacing indicated to be removed. The Contractor shall haul the material and disposing of it off the site. Crushed materials may not be incorporated in fill areas.

F. Tree Removal:

1. Within working limits of this contract remove all trees indicated by symbol or noted on plans to be removed. Remove trees, together with the bulk of roots, to a minimum depth of 4' - 0" below existing grade and within a radius of 7'-0" beyond perimeter of trunk at ground line. Tree removal shall be the first work performed upon job start.

2. Tree trunk stumps will be completely removed or ground to a depth that stump and roots are a minimum of 12 inches (1 foot) below grade. If new planting is going to occur over ground stump, the conditions may require a deeper grinding or woody stump and root removal to a 24 inch (2 foot depth per the specification for Landscape Grading as necessary. Contractor must prepare planter or turf areas to meet new planting requirements throughout the project site.

   In turf areas, stumps must be removed or ground below the surface of the turf to allow soil backfill and proper reseeding of turf grass. As each stump is different, stump grinding should reduce the stump to 12 inches (1 foot) below turf finish grade. Any surface roots must also be removed to a depth of 12 inches (1 foot) to allow reseeding of turf grass.

2. Holes resulting from tree removal shall be filled and compacted with clean earth to the required density as specified for filling under sections "Grading". Filling shall not be done until holes have been approved by the City. Add to backfill until final soil level is achieved. Sunken areas will not be approved.

G. Protect bench marks, survey control points, existing light poles and signs, and existing utilities and/or structures from damage or displacement.

3.3 CLEAN-UP

A. Site: all debris resulting from the work of this section, together with all tools, equipment, and appliances used shall be completely removed from the site upon completion of the work.

END OF SECTION

SECTION 02 41 20
SELECTIVE BUILDING DEMOLITION

PART 1 - GENERAL

1.01 SUMMARY

A. Section Includes:
   1. Systematic removal of portions of buildings and structures.
   2. Salvage of existing items for reuse.
   3. Salvage of construction materials for recycling.
   4. Supplementary components and accessories normally furnished or necessary for a complete installation, whether or not such items are indicated on the Drawings or included in the Specifications.

1.02 REFERENCES

A. Definitions:
   1. Remove: Means to detach from existing construction and legally dispose off-site.
   2. Demolish: Means the same as “remove”.
   3. Dispose: Means to get rid of by throwing away; or by giving or selling to someone else.
   4. Reuse: Means to use again for the same function without re-processing.
   5. New-Life Reuse: Means to use again for a different function without re-processing.
   6. Remove and Salvage: Means to detach from existing construction, prepare for reuse or storage as applicable, and then deliver to the Owner.
   7. Remove and Reinstall: Means to detach from existing construction, prepare for reuse, and reinstall where indicated.
   8. Recycle: Means to detach from existing construction, break down into raw materials, and then process the materials to make new items.
   9. Existing-to-Remain: Means existing items that are not removed, reused, or recycled.

1.03 ADMINISTRATIVE REQUIREMENTS

A. Coordination: Demolition drawings are diagrammatic and show existing conditions with information developed from field surveys and to generally show the extent and type of demolition required. The Owner will maintain conditions existing at the time of inspection for bidding purposes as far as practicable.
   1. Make a detailed survey of existing conditions before beginning demolition, and report discrepancies or conflicts between Drawings and actual conditions in writing to the Architect for clarifications and instructions.
   2. Do not proceed, when such conflicts or discrepancies occur, before receipt of the Architect's instructions.

B. Pre-Demolition Conference: To review methods and procedures related to the work of this specification Section, conduct a pre-demolition conference at the project site.
   1. Inspect and discuss condition of construction to be selectively demolished.
   2. Review structural load limitations of existing structure.
   3. Review and finalize selective demolition schedule and verify availability of materials, demolition personnel, equipment, and facilities needed to make progress and avoid delays.

4. Review requirements of work that rely on substrates exposed by selective demolition operations.
5. Review areas where construction is existing-to-remain and requires protection.

1.04 SUBMITTALS

A. Informational Submittals:
1. Schedule of Selective Demolition Activities: Indicate the following.

a. Detailed sequence of selective demolition and removal work, with starting and ending dates for each activity. Ensure Owner's on-site operations are uninterrupted.

b. Interruption of utility services. Indicate how long utility services will be interrupted.

c. Coordination for shutoff, capping, and continuation of utility services.

d. Use of elevator and stairs.

e. Locations of proposed dust- and noise-control temporary partitions and means of egress.

f. Coordination of Owner's continuing occupancy of portions of existing building and of Owner's partial occupancy of completed work.

g. Means of protecting existing-to-remain items in the path of waste removal.

2. Inventory: After selective demolition is complete, submit a list of items that have been removed and salvaged.
3. Pre-Demolition Photographs or Videos: Submit videos or photographs showing existing conditions of adjoining construction and site improvements, including finish surfaces that might be misconstrued as damage caused by selective demolition operations.

1.05 QUALITY ASSURANCE

A. Quality Standards: Comply with the safety requirements of both American National Standards Institute/ American Society of Safety Engineers publication ANSI/ASSE A10.6. “*Safety Requirements for Demolition Operations*” and National Fire Protection Association publication NFPA 241, “*Standard for Safeguarding Construction, Alteration, and Demolition Operations*”.

1.06 PROJECT CONDITIONS

A. Hazardous Materials: Hazardous materials may be encountered in the building or at the project site.
1. If materials suspected of containing hazardous materials are encountered, do not disturb; promptly notify the Architect and Owner.
2. The Owner removes asbestos containing materials (ACMs) under separate contract; Contractor removes all others. (e.g., lead-based/containing paint, etc.)

PART 2 - PRODUCTS (NOT USED)

PART 3 - EXECUTION

3.01 EXAMINATION

A. Oversight: Ensure adequate supervision practices are followed at the project site before demolition work begins and at all times during installation.

B. Survey: Engage a professional engineer to survey condition of building to determine whether removing any element might result in structural deficiency or unplanned collapse of any portion of structure or adjacent structures during selective demolition operations.
   1. Survey existing conditions and correlate with requirements indicated to determine extent of selective demolition required.
   2. Provide means to have digital molds created to repair ornate items in case of loss (e.g., laser cloud point scan).
   3. Inventory and record the condition of items removed and reinstalled and removed and salvaged.
   4. When unforeseen mechanical, electrical, or structural elements are encountered that conflict with intended function or design, investigate and measure the nature and extent of conflict. Promptly submit written report to Architect.
   5. Perform surveys as the work progresses to detect hazards resulting from selective demolition activities.

3.02 PREPARATION

A. Site Protection: Protect existing-to-remain sitework against damage and soiling during demolition.
   1. Do not begin selective demolition work until temporary partitions, barricades, warning signs, and other forms of protection are installed.
   2. Protect trees, plants, utilities, and existing improvements that are not to be removed from injury or damage. Replace damaged landscaping, improvements, and utilities in kind.
   3. During demolition, provide safeguards for protection of the public, Contractor's employees, and existing improvements existing-to-remain, including warning signs and lights, barricades, and the like.
   4. Provide and maintain shoring, bracing, and structural supports required to preserve stability and prevent movement, settlement, or collapse of existing-to-remain construction and finishes; and to prevent unexpected or uncontrolled movement or collapse of construction being demolished.

B. Building Protection: Protect existing-to-remain building construction against damage and soiling during selective demolition.
   1. Do not begin selective demolition work until temporary building bracing, barricades, and other protection necessary to prevent injury to people and damage to adjacent existing-to-remain facilities.
   2. Do not allow water to enter existing-to-remain wall or roof insulation. Replace insulation when it is wetted.

C. Utilities, Services, and Building Systems Protection:
   1. Maintain existing-to-remain utility services and mechanical and electrical systems and protect them against damage during selective demolition operations.

2. Locate, identify, disconnect, and seal or cap off indicated utility services and mechanical and electrical systems serving areas indicated for demolition.

    a. Arrange with utility companies to shut off indicated utilities.

    b. If building systems or mechanical and electrical systems are indicated as removed, relocated, or abandoned, provide temporary services and systems that bypass demolition areas and maintain continuity of services and systems to other parts of building before proceeding with selective demolition.

    c. Cut off pipe or conduit in walls or partitions to be removed. Cap, valve, or plug and seal remaining portion of pipe or conduit after bypassing.

3.03 DEMOLITION

A. General Demolition Requirements:

1. Coordinate demolition to assure the proper sequence, limits, methods, and time of performance. Schedule demolition to impose minimum of hardship on present facility operations and performance of the work.
2. Conduct selective demolition and debris-removal operations to ensure the least interference with roads, streets, walks, walkways, and other adjacent occupied and used facilities.
3. Demolish and remove existing construction only as shown and to the extent required by new construction. Use methods necessary to complete the work within indicated or specified limitations.

    a. Maintain existing building structure (including structural floor and roof decking) and envelope (exterior skin and framing, excluding window assemblies and nonstructural roofing material) not shown as demolished; do not demolish existing construction beyond indicated limits.

    b. Maintain existing interior nonstructural elements (interior walls, doors, floor coverings, and ceiling systems) not shown as demolished.

    c. Do not demolish existing construction beyond indicated limits.
4. Neatly cut openings and holes plumb, square, and true to dimensions required. Use cutting methods least likely to damage existing-to-remain construction or adjoining construction.
5. Use hand tools or small power tools designed for sawing or grinding, not hammering and chopping, to minimize disturbance of adjacent surfaces.
6. Cut or drill from the exposed or finished side into concealed surfaces to avoid marring existing finished surfaces. Verify condition and contents of hidden space before starting cutting operations.
7. Do not use cutting torches until after work areas are cleared of flammable materials. Maintain portable fire-suppression devices during flame-cutting operations.
8. Temporarily cover existing-to-remain openings.
9. Locate selective demolition equipment and remove debris and materials so as not to impose excessive loads on supporting walls, floors, or framing.
10. Do not remove any item in a manner that that results in any warranty or guarantee becoming void.

B. Special Techniques:

1. Removed and Salvaged Items:

    a. Clean salvaged items.

b. Pack or crate items after cleaning. Identify contents of containers.

c. Store items in a secure area or location until delivery to the Owner.

2. Removed and Reinstalled Items:

a. Clean and repair items to functional condition adequate for intended reuse. Paint equipment to match new equipment.

b. Pack or crate items after cleaning and repairing. Identify contents of containers.

c. Protect items from damage during transport and storage.

d. Reinstall items in locations indicated. Comply with installation requirements for new materials and equipment. Provide connections, supports, and miscellaneous materials necessary to make items functional for use indicated.

3. Existing-to-Remain Items:

a. When permitted by the Architect, items may be removed to a suitable, protected storage location during selective demolition and cleaned and reinstalled in their original locations after selective demolition operations are complete.

3.04 CORRECTION AND REPAIR

A. Damaged existing-to-remain work must be patched and repaired. Correct and repair as necessary, without limitation, including arranging all correction and repair work and paying all correction and repair costs, until accepted in writing by the Architect.

B. Corrective and repair work must be performed in conformance with a correction and repair plan submitted to and accepted in writing by the Architect before correction or repair work begins. At a minimum, correction and repair plans must include
   1. written descriptions of non-conforming, damaged, and defective work;
   2. supporting sketches, diagrams, photographs, and other visual depictions of non-conforming, damaged, and defective work; and
   3. similar written descriptions and visual depictions of Contractor-proposed corrections and repairs.

C. Do not correct, repair, or replace any item in a manner that that results in any warranty or guarantee becoming void.

D. Arrange and pay costs for removing and replacing work that cannot be corrected or repaired to the Architect’s acceptance.

3.05 CLEANING

A. Except for recycled, reused, salvaged, and reinstalled items and other existing-to-remain items on Owner's property, remove demolished materials from the project site and legally dispose off-site. Do not burn demolished materials.

B. Removed items not indicated for reuse, reinstallation, or salvage are the property of the Contractor and must be cleared from the project site.
   1. Continuously clean up and clear these items; do not allow them to accumulate in the building or at the project site.
   2. Material and equipment may not be viewed by prospective purchasers nor sold on the site.
   3. The Owner is not responsible for the condition, loss, or damage to removed items.

C. Waste Management: After completing the work of this specification section, leave work areas free from debris, waste, scrap, equipment, tools, and other items.

END OF SECTION

©AWCWEST 18E22 All rights reserved.
TAGDSC, ELMTF, CLSF3030

SECTION 02 82 13
ASBESTOS AND LEAD-BASED PAINT ABATEMENT

PART 1: GENERAL

1.1 PROJECT SITE

The project site is located at the Granada Hills Recreation Center, 16730 Chatsworth Street, Granada Hills, California. The project area consists of the Pool and associated decking, walls and fencing, Bathhouse, Pool Equipment Building and Spectator Seating area.

1.2 SCOPE OF WORK

A. The main goal for this project is the removal of asbestos-containing materials (ACMs), Lead-Based Paint (LBPs), and Lead-Containing Materials prior to the demolition and renovation activities.

B. All removal and disturbance of ACMs shall be performed by an asbestos abatement contractor, using 32-hour asbestos certified workers (Asbestos Worker trained as outlined in 40 CFR 763). Abatement contractor's workforce shall be supervised by experienced persons trained, knowledgeable and qualified in the techniques of asbestos abatement, handling and disposal of asbestos-containing and/or asbestos-contaminated materials, and the subsequent cleaning of contaminated areas, including, at a minimum, Competent Person/Contractor Supervisor training as outlined in 40 CFR 763.

C. All removal and disturbance of LBPs and lead-containing materials shall be performed by a state-licensed contractor, using California Department of Public Health (CDPH) certified workers with at least one CDPH-certified Supervisor. All removal and disturbance of lead-containing materials (not meeting the definition of lead-based) as defined in 8 CCR 1532.1, shall be performed by a state-licensed contractor, using lead-trained workers with certification of training meeting the requirements of 8 CCR 1532.1. Abatement contractor's workforce shall be supervised by experienced persons trained, knowledgeable and qualified in the techniques of lead abatement, handling and disposal of lead-containing and/or lead- contaminated materials, and the subsequent cleaning of contaminated areas.

D. When exposure monitoring of a particular lead-related task indicates that the permissible exposure limit (PEL) is or will be exceeded, the contractor shall use CDPH-certified lead workers to complete the task. Contractors performing work that disturbs any lead-containing material (LCM) must submit proof of negative exposure assessment (NEA) if personal protective equipment is not to be used.

E. For Cal/OSHA compliance purposes, all painted, varnished, and glazed surfaces identified in the survey report with lead concentrations less than 1.0 milligrams per square centimeter (mg/cm^2) will require that contractors performing activities that will disturb these surfaces/materials comply with the requirements of 8 CCR 1532.1.

F. Contractor shall furnish all labor, materials, services, insurance (specifically covering the handling and transportation of asbestos, lead, and other hazardous materials), and equipment which is specified, shown or reasonably implied for the removal, transport, and disposal of the hazardous materials identified in the following tables:

Table 1 – ACMs and ACCMs to be Abated

Building Material	Percent Asbestos	Comments
Asphaltic roofing material (roofing shingles)	10 – 20% Chrysotile	Asbestos was detected amongst multiple layers of roofing on the Bathhouse. Approximately 5,800 square feet of roofing material. The asphaltic roofing is a non-friable ACM and was in good condition at the time of the survey. Pipes and penetrations observed on the roof were metal.
Roof penetration mastic	10% Chrysotile	Asbestos was detected on the mastic used at roof penetrations at vents, approximately 25 square feet. The roof penetration mastic is a non-friable ACM and was in good condition at the time of the survey.
Exterior stucco	0.2 – 0.49% Chrysotile (1,000-point count)	Located at the exterior northeast, northwest, southeast and southwest walls and the west entrance to the Bathhouse, approximately 1,100 square feet. The samples were further analyzed by 1,000-point count method. The exterior stucco is an ACCM and was in good condition at the time of the survey.
Grey rolled roofing	10 – 15% Chrysotile	Located on the roof of the Pool Equipment Building. Asbestos detected amongst multiple layers of roofing, approximately 850 square feet. The grey rolled roofing is a non-friable ACM and was in good condition at the time of the survey.
Grey roof mastic	10% Chrysotile	Located at vent pad corners and roof penetrations on the Pool Equipment Building roof, approximately 10 square feet. The mastic is a non-friable ACM and was in good condition at the time of the survey.
Interior plaster walls	< 0.1 – 0.5% Chrysotile (1,000-point count)	Located on the interior beige, rough- finish plaster walls inside the Bathhouse, approximately 3,500 square feet. Metal pipes inside wall cavities and along the ceiling were observed to be uninsulated. Samples of interior plaster were analyzed further by 1,000-point count method. The beige interior plaster walls are an ACCM and were in good condition at the time of the survey.
Grey rolled roofing	15 – 20% Chrysotile	Asbestos was detected amongst multiple layers of roofing at the Spectator Shelter, approximately 600 square feet. The rolled roofing is a non-friable ACM and was in good condition at the time of the survey.
Roof patch mastic	5 – 10% Chrysotile	Located as patches on the roof of the Spectator Shelter, approximately 15 square feet. No roof penetrations were observed. The mastic is a non-friable ACM and was in good condition at the time of the survey.

Lead was detected above concentrations greater than 0.7 mg/cm^2 in the following areas. Table 2 is a listing of LBPs and LCMs that may be impacted by the planned renovation activities:

Table 2 – Lead-Containing Materials (LCMs) to be Removed

Building Component	Paint Color	Lead Content (mg/cm2)	Comments
Ceramic tile	Black	16.9 - 18	Ceramic tile located on the north and south pool walls as lane markers. They have been painted over with black paint. Approximately 14 square feet. The tiles are intact.
Ceramic sink	White	33.7	Located on the interior west wall of the Director's Office in the Bathhouse. One (1) sink in intact condition.
Ceramic wall tile	Tan	3.9	Located at the interior lower west wall in the Men's Restroom in the Bathhouse, by the urinals. Approximately 32 square feet. The tile is intact.
Ceramic urinals	White	2.8	Located at the southwest side of the Men's Restroom in the Bathhouse. Three (3) urinals. The urinals are intact. Ceramic sinks in the Men's and Women's Restrooms are negative for lead.
Ceramic toilets	White	2.8 – 3.2	Located in the Men's and Women's Restrooms in the Bathhouse, approximately seven (7) toilets total. The toilets are intact. The toilets and sinks in the Men's and Women's Staff Restrooms are negative for lead.
Ceramic sink	White	8.8	Located in the Utility Room next to the Women's Shower Hall in the Bathhouse. (One) 1 sink in intact condition.

LCMs impacted by the planned project shall require component removal. It is recommended that those LCMs that can be removed intact, be done so and that measures be taken to avoid the creation of lead dust during the abatement/removal of LCMs that have to be demolished (i.e. ceramic tiles).

G. The work includes the removal, transport, and disposal of the following:

1. All impacted hazardous materials identified in the tables and listed in Article 1.2.F, above.
2. All materials used for work area preparation.
3. All materials used for paint stabilization and cleaning of contaminated areas.
4. All discarded personnel protective equipment.
5. All other potentially contaminated materials.

H. Other items and responsibilities of work shall include:

1. As per agreement between Contractor and Owner.

2. The abatement contractor will coordinate with the General Contractor accessibility to the existing water supply for construction purposes.

3. The abatement contractor will coordinate with the General Contractor accessibility to the existing electrical power for construction purposes.

I. Damages caused to property features not associated with the buildings during the performance of abatement activities shall be repaired by Contractor (at no additional expense to Owner, unless other arrangements and approval have been provided by the Owner).

J. Listed quantities are for budgetary information and are not to be used for bidding purposes. The abatement contractor has the sole responsibility for confirming the location, quantity and degree of difficulty in removing the impacted identified materials.

K. All contractors providing bids for abatement of asbestos-containing, LBPs and LCMs (see Article F above) shall provide a cost break down of their bids to include labor (preparation time, abatement time and number of workers), materials (equipment to be used and material costs), and disposal and transportation costs as well as a final total.

L. The bidding contractors shall provide unit costs in their bids for the removal and disposal of ACMs (per square foot) and LBPs (per square foot or fixture) encountered during the demolition project. Contractor may provide actual quantities and values to be compared to the total allowance.

M. If during the renovation activities, additional suspect ACMs and/or LBPs are found that have not been previously sampled, the materials will need to be assumed asbestos and lead-containing and abated by applicable procedures (see Part 3, Execution). Abatement of assumed ACMs and LBPs can be avoided if the suspect materials are sampled and analyzed for asbestos and/or lead content, with the analytical results indicating no asbestos or lead detected.

1.3 WORK TO BE PERFORMED BY OTHERS

As per Project Specifications.

1.4 RESPONSIBILITIES OF OWNER

A. The Owner will provide daily oversight of and environmental monitoring surrounding the abatement/removal operations.

B. The abatement contractor shall coordinate with the Owner, project representatives, and/or General Contractor for the location of equipment storage, staging and waste storage locations.

1.5 REQUIRED LICENSURE

A. Contractor shall be licensed by the State of California, Contractors State License Board and be registered to perform asbestos related work with the Division of Occupational Safety and Health, Department of Industrial Relations, and at a minimum contractor shall hold the following license classifications:

1. C-22 – Asbestos Abatement Contractor

2. EPA Lead-Safe Certified Renovator

3. HAZ – Hazardous Substance Removal Certification

B. Transportation of Friable and Non-Friable Asbestos Containing Materials: Contractor shall itself be or have a subcontractor who is a registered hazardous waste transporter with the State of California, Department of Toxic Substances Control.

C. Subcontractors shall hold all licenses applicable to specified trade work.

1.6 PERMITS

A. As required by Cal/OSHA

B. As required by the South Coast Air Quality Management District.

C. As required by City of Los Angeles, as applicable.

1.7 NOTIFICATIONS

A. Contractor shall make all required written notifications to regulatory agencies including the following:

1. Cal/OSHA

2. SCAQMD

3. CDPH

1.8 INSURANCE REQUIREMENTS

Please refer to the General Conditions and General Requirements of the Project in Division 1.

1.9 BONDING REQUIREMENTS

Please refer to the General Conditions and General Requirements of the Project in Division 1.

1.10 PROJECT SCHEDULE

A. Project Start Date: Please refer to the Project Manual. Project Completion Date: Please refer to the Project Manual.

B. All work shall be performed as per agreement between Contractor and Owner.

C. For the purposes of this Work Plan "submittal due date" shall mean the day on which submittals required by Article 1.12 shall be received by the Construction Manager, "start work" shall mean the day Contractor arrives on the project site, and "completion date" shall mean the day Contractor leaves the project site including final clearance testing and demobilization.

D. Contractor to indicate the number and duration of shifts required to perform abatement monitoring as part of the bid document. Costs associated with hazardous materials abatement monitoring, beyond those pertaining to the project duration indicated in the Contractor’s Bid, shall be deducted from Contractor’s Contract Amount.

1.11 APPLICABLE REGULATIONS

A. Contractor shall perform all work in compliance with the most recent edition of all applicable federal, state, and local regulations, standards and codes governing asbestos abatement, transport, and disposal of asbestos containing/contaminated materials, lead-based/containing surface coatings and contaminated materials.

1. Requirements include obtaining permits, licenses, inspections, releases and similar documentation, as well as payments, statements and similar requirements associated with codes, regulations, and standards.

B. Regulations, Standards, and Codes (General):

1. General applicability of federal, state, and local regulations, standards and codes governing hazardous materials abatement, demolition, transport, and disposal, except to the extent that more explicit or more stringent requirements are written directly into the contract documents, all applicable regulations, standards, and codes have the same force and effect and are made a part of the contract documents as if copied directly into the contract documents, or as if published copies are bound herewith.

C. Contractor Responsibility: The Contractor shall assume full responsibility and liability for the compliance with all applicable federal, state, and local regulations pertaining to work practices, transport, disposal, and protection of workers, visitors to the site, and persons occupying areas adjacent to the site.

1. The contractor is responsible for providing training, medical examinations and maintaining training/medical records of personnel as required by the applicable federal, state, and local regulations, including personal air monitoring for all work practices.

2. The Contractor shall hold the Owner and Project Environmental Consultant harmless for failure to comply with any applicable hazardous materials abatement, transport, disposal, safety, health or other regulation on the part of himself, his employees, or his subcontractors.

1.12 SUBMITTALS

A. No later than 10 days prior to commencement of work, Contractor shall submit (two copies) to the Owner Representative and/or Project Environmental Consultant documentation that includes, without limitation, the following:

1. Current Copies of licenses and registrations required by Article 1.5 Required Licensure (include copies of subcontractor’s licenses).

2. Copies of written notification to the following regulatory agencies:

a. Cal/OSHA

b. SCAQMD

c. City of Los Angeles Permits (if applicable)

d. CDPH

3. Current proof of insurance coverage required by Article 1.8 Insurance Requirements (include proof of insurance for subcontractors).

4. Current proof that required permits, site location and arrangements for transport and disposal of asbestos and lead waste materials have been made.

5. Current proof of legal right to use patented equipment or processes.

6. Current Manufacturer's certification that HEPA vacuums, differential pressure air filtration devices and other local exhaust ventilation equipment conform to ANSI Z9.2-79 and have been permitted by the SCAQMD.

7. Current documentation showing that Contractor's employees, including foreman, supervisor, and any other company personnel or agents who may be exposed to airborne asbestos fibers or who may be responsible for any aspects of asbestos abatement activities, have received training as required by 29 CFR 1926.1101 and 8 CCR 1529.

8. Current documentation showing that Contractor's employees, including foreman, supervisor, and any other company personnel or agents who may be exposed to airborne lead dust or who may be responsible for any aspects of lead abatement activities, have received training as required by 29 CFR 1926.62 and 8 CCR 1532.1.

9. Current documentation from Physician (signed by an M.D.) showing that all employees or agents who may be exposed to airborne asbestos fibers, and/or lead dust, in excess of background levels have received medical monitoring to determine whether they are physically capable of working while wearing the respirator required without suffering adverse health effects. The Contractor must be aware of and provide information to the examining physician about unusual conditions in the workplace environment (e.g. high temperatures, humidity, chemical contaminants) that may impact on the employee's ability to perform work activities.

10. Current documentation of respirator fit-testing for all Contractor employees and agents who must enter the work area. This fit-testing shall be conducted annually and in accordance with procedures as required by 29 CFR 1910.134 and 8 CCR 5144.

11. An emergency preparedness plan as required by Article 1.15 - Emergency Planning.

12. Master schedule, showing phasing, number of shifts, time for air clearances, tear down and manpower loading to be utilized for the duration of the project.

13. A site-specific work plan based on scope of work. Include a diagram showing containment set-up, decontamination unit(s), locations of negative air machines and exhaust placement.

14. The name, address and telephone number of the transporter and disposal facility must be provided to Owner.

B. During abatement activities, Contractor shall submit to the Owner Representative and/or Project Environmental Consultant documentation that includes, without limitation, the following:

1. Copies of the work area entry/exit log book. Log book must record name, affiliation, time in, and time out for each entry into the work area.

2. Copies of logs documenting filter changes on respirators, HEPA vacuums, differential pressure air filtration devices, water filtration device, and other engineering controls.

3. Copies of Safety Data Sheets (SDS) for solvents, encapsulants, wetting agents, replacement materials, and other substances brought by Contractor to the Project Site. SDSs shall be available the first day that subject materials/substances are present on the project site.

4. Results of all required OSHA compliance air monitoring. Results shall be available prior to the start of the following shift and within 24 hours of completion of the last shift.

5. Copies of all accident/incident reports where injury or damage has occurred on or to the Owner's property.

6. Copies of daily logs indicating location(s) worked, type of materials removed, quantity of materials removed and number of personnel conducting the aforementioned activities.

7. Copies of all transport manifests, trip tickets and disposal receipts for all asbestos, lead and universal waste materials removed from the work area shall be provided. Copies shall be provided to the City Project Inspector per General Requirements in Division 1.

8. Abatement contractor is responsible for profiling all waste streams that contain lead prior to transport and disposal. Results must be submitted to the Owner Representative and/or Environmental Consultant for verification of prior to disposal. See Section 3.3 and 3.4 of this specification.

1.13 NOTICES

A. Post in the clean room area of the worker decontamination enclosure a list containing the names, and telephone numbers of Owner, Construction Manager, Abatement Contractor, and Project Environmental Consultant.

B. Post in the clean room area of the worker decontamination enclosure a list of all persons authorized to enter the work area.

C. Additional postings shall include:

1. Visitor Entry and Exit Log
2. Employee Daily Sign in Log
3. Entry and Exit Procedures
4. Emergency Procedures
5. Copies of permits required in Article 1.6 of this document and copies of notifications required in Article 1.7 of this document.
6. As required by the Department of Labor.

1.14 SITE USE AND SECURITY

A. Confine operations at the site to the areas permitted under the Contract. Portions of the site beyond which areas on which work is indicated are not to be disturbed.

B. The work area shall be restricted only to authorized, trained and protected personnel, including Contractor, Contractor's employees, and Owner employees, Owner, Construction Manager, Project Environmental Consultant, State and Local Inspectors.

C. Entry into the work area by unauthorized individuals shall be reported immediately to the Project Environmental Consultant.

D. Contractor shall be responsible for Project site security during abatement operations in order to protect work efforts and equipment.

1.15 EMERGENCY PLANNING

A. Emergency planning and procedures shall be developed by Contractor prior to abatement initiation.

B. Emergency procedures shall be in written form and prominently posted. Contractor shall ensure that all persons entering the work area read these procedures and understand the Project site layout, location of emergency exits and emergency procedures.

C. Emergency planning shall include considerations of fire, explosion, electrical hazards, slips, trips and falls, confined spaces, park emergencies and heat related injury. Written procedures shall be developed and employee training in procedures shall be provided by Contractor.

D. Employees shall be trained in evacuation procedures in the event of work place emergencies.

1. For non-life-threatening situations, employees injured or otherwise incapacitated shall decontaminate following normal procedures with assistance from fellow workers, if necessary, before exiting the work place to obtain proper medical treatment.
2. For life-threatening injury or illness, worker decontamination shall take least priority. After measures to stabilize the injured worker, remove him from the work place and secure proper medical treatment.
3. Telephone numbers of all emergency response personnel and map to closest hospital shall be prominently posted in the clean and equipment rooms.

1.16 FIRE PROTECTION

A. All plastic, spray-on strippable coatings, and structural materials used in the asbestos abatement process shall be UL-approved and certified as fire retardant or noncombustible.

B. Wood shall be pressure impregnable and certified as fire retardant.

C. Safety Data Sheets (SDS) for fire retardant materials shall be made available upon request.

D. All combustible rubbish and debris, including properly bagged asbestos shall be properly disposed of at the end of each working day.

E. A minimum of one (1) 4A/60BC dry-chemical extinguisher shall be maintained at each of the following locations:

1. At each corner of the work area. Where no clear corners exist, four (4) extinguishers shall be placed around the exterior wall of the work area so that they are approximately 25 percent of the total distance apart.

a. Exception: Where the total contained work, area is less than 1,000 square feet, two (2) 4A/60BC extinguishers shall be provided. All extinguishers shall be clearly identified with red tape.

2. Contractor shall ensure that on site personnel are aware of the location and proper use of all extinguishers and other fire/life safety equipment.

F. All existing fire detection, alarm systems, connections and standpipes shall remain in place, active and unobstructed. Any alteration to this equipment must be approved by the Owner.

PART 2 - PRODUCTS

2.1 MATERIALS

A. Generally, Contractor shall carefully adhere to the following:

1. All plastic, spray-on strippable coatings and structural materials used shall be UL-certified as fire retardant or non-combustible.

2. Deliver all materials in the original packages, containers, or bundles bearing the name of the manufacturer and brand name (where applicable).

3. Fire-retardant polyethylene sheeting utilized for worker decontamination and construction/containment barriers shall be a minimum of six-mil in thickness.

4. Disposal bags shall be of six-mil polyethylene, pre-printed with labels as required by EPA regulation 40 CFR 61.152 (b) (I) (iv) or applicable Cal/OSHA requirements.

5. Stick-on labels as per EPA or Cal/OSHA requirements for disposal drums.

6. Warning signs as required by Cal/OSHA shall be utilized.

7. Disposal drums shall be 55-gallon DOT A1A (DOT 17H) with locking ring tops and will meet the requirements of 49 CFR 172-178.

B. Removal and Encapsulation:

1. Surfactant (wetting agent) shall be a 50/50 mixture of polyethylene ether and polyethylene ester, or equivalent, mixed in proportion of 1 fluid ounce to 5 gallons.

2. The encapsulating agent to be applied shall adhere to the substrate surfaces from which asbestos-containing material has been stripped.

3. The encapsulating agent shall not be flammable and should not be solvent-based or utilize a vehicle (the liquid in which the solid parts of the encapsulant are suspended) consisting of hydrocarbon.

4. If utilized, mastic removal solvents shall NOT be or create a RCRA waste and shall be of the low odor variety.

2.2 EQUIPMENT

A. General

1. A sufficient quantity of HEPA vacuums and/or differential pressure air filtration devices equipped with HEPA filtration and operated in accordance with ANSI Z9.2-79 (local exhaust ventilation requirements) and EPA guidance document EPA 560/5-83-002 Guidance for Controlling Friable Asbestos Containing Materials in Buildings. To calculate total air flow requirement:

$$\text{Total ft}^3\text{/minute} = \frac{\text{Volume of work area (in cubic feet (ft}^3\text{)}}{\text{15 minutes}}$$

To calculate the number of units needed for the abatement:

$$\text{Number of units needed} = \frac{\text{Total ft}^3\text{/minute}}{\text{Capacity of unit in ft}^3\text{/minute}}$$

2. At a minimum, full-face powered air-purifying respirators (PAPRs) with HEPA P-100 cartridges shall be utilized during all friable/Class I asbestos removal and for all removal of lead-containing paints/substances involving abrasive removal techniques.

3. At a minimum, half-face air-purifying respirators with HEPA P-100 cartridges shall be utilized during all ceramic tile or lead-containing paint removal/impact except abrasive removal, or for the removal of all non- friable/Class II asbestos removal.

4. Respirators shall be furnished to the abatement workers by Contractor. The respirators shall have been tested and approved by National Institute of Occupational Safety and Health (NIOSH) for use in asbestos atmospheres.

5. Full body disposable protective clothing, including head, body, and foot coverings shall be furnished to visitors in sizes adequate to accommodate movement without tearing.

6. Additional safety equipment as supplied in accordance with 8 CCR 1514, (e.g. hard hats meeting the requirements of 8 CCR 1515, eye protection meeting the requirements of 8 CCR 1516, safety shoes meeting the requirements of 8 CCR 1517, hand protection meeting the requirements of 8 CCR 1520, hearing protection meeting the requirements of 8 CCR 1521 and body protection meeting the requirements of 8 CCR 1522), as necessary, shall be furnished to all workers and authorized visitors.

7. Non-skid foot wear shall be furnished to all abatement workers. Disposable clothing shall be adequately sealed to the footwear to prevent body contamination.

8. Furnish a sufficient supply of disposable mops, rags, and sponges for work area decontamination.

9. Fall protection, including harnesses and lanyards complying with Cal/OSHA requirements shall be supplied by the Contractor for workers engaged in abatement activities on scaffolding and/or roofs.

B. Removal:

1. A sufficient supply of scaffolds, ladders, lifts and hand tools (e.g., scrapers, wire cutters, brushes, utility knives, wire saws, etc.) shall be furnished as needed.

2. Rubber dustpans and rubber squeegees shall be furnished for cleanup. Under no circumstances shall brooms be used for the cleanup of asbestos debris.

3. Brushes utilized for removing loose asbestos-containing material shall have nylon or fiber bristles, not metal.

4. A sufficient supply of HEPA filtered vacuum systems shall be furnished during cleanup.

C. Encapsulation: Encapsulants shall be sprayed using airless spray equipment or hand pressurized sprayer.

D. Enclosure: Hand tools equipped with HEPA filtered local exhaust ventilation shall be utilized during the installation of enclosures and supports if there is any need to disturb asbestos containing materials during this process. As an alternative, asbestos material may be partially removed following controlled removal procedures approved by the Project Environmental Consultant.

PART 3 - EXECUTION

3.1 CLASS II ASBESTOS REMOVAL WORK (INTERIOR) – INCLUDING SPOT ABATEMENT

The following procedure shall be utilized for all removal of non-friable/Class II ACM and ACCM from all impacted surfaces, as applicable.

A. Contractor shall coordinate all items of work with the Project Environmental Consultant.

B. Contractor shall shut down and lock out all heating, cooling, and air conditioning systems (HVAC) components that are in supply or pass through the work area. In the event that there is any impact to the HVAC system (such as an air intake), the HVAC system shall remain off during the project.

C. Contractor shall shut down and lock out electric power to all Work Areas. Contractor shall provide temporary power and lighting sources, insure safe installation of temporary power sources and equipment by compliance with all applicable electrical code requirements and Cal/OSHA requirements for temporary electrical systems. Protect each circuit with a Ground Fault Circuit Interrupter (GFCI) of proper size located in the temporary panel.

D. Install worker decontamination unit described in Article 3.5 or as agreed upon with Project Environmental Consultant.

E. Post warning signs meeting the specifications of 8 CCR 1529, 8 CCR 5208, and 29 CFR 1926.1101, at any location and approaches to a location where airborne concentration of asbestos fibers may exceed ambient background levels. Signs shall be posted at a distance sufficiently far enough away from a work area to permit a person to read the sign and take necessary protective measures to avoid exposure.

F. Asbestos Handlers shall don personnel protective equipment as required in Article 2.2 - Equipment.

G. Pre-clean all vertical and horizontal surfaces within the work area using HEPA-filtered vacuum and/or wet cleaning techniques, as appropriate. Contractor shall not use any methods that would raise dust, such as dry sweeping or vacuuming with equipment not equipped with HEPA filters and shall not disturb asbestos-containing materials during the pre-cleaning phase.

H. Seal off all windows, doorways, elevator openings, corridor entrances, drains, ducts, grills, grates, diffusers, skylights and any other openings between the Work Area and uncontaminated areas outside of the Work Area with two layers six-mil fire retardant

polyethylene sheeting and tape as critical barriers.

I. Cover floors in the area of wall removal with fire retardant polyethylene sheeting.

1. A single layer of six-mil (minimum) sheeting. Additional layers of sheeting shall be utilized as a drop cloth to aid in cleanup of bulk materials.

2. Containment plastic shall be sized to minimize seams. If the floor area necessitates seams, those on successive layers of sheeting shall be staggered to reduce the potential for water to penetrate to the flooring material. A distance of at least 6 feet between seams is sufficient. Do not locate any seams at wall/floor joints.

3. Sheeting shall be installed in a fashion so as to prevent slippage between successive layers of material.

J. Cover all immovable items (plumbing, etc.) and/or construct walls in the Work Area with fire retardant polyethylene sheeting. Walls that will be demolished do not necessarily need protection (check with Project Environmental Consultant). Walls shall be decontaminated using HEPA vacuums and wet cleaning techniques. Walls with mortar joints (e.g., tile) are considered porous. These walls must be sealed by critical barriers.

1. Walls shall be covered with two layers six-mil fire-retardant polyethylene sheeting (sealed airtight with duct tape).

2. Plastic shall be sized to minimize seams. Seams shall be staggered and separated by a distance of at least six feet.

3. Wall sheeting shall overlap floor sheeting by at least 12 inches beyond the wall/floor joint to provide a better seal against water damage and for negative pressure if the wall is not being demolished.

4. Wall sheeting shall be secured adequately to prevent it from falling away from the walls. This will require additional support/attachment when Negative Pressure Ventilation Systems are utilized.

5. Fire exits shall be clearly labeled as required by Regulations.

K. Install the minimum number of 2' x 3' clear view windows that will provide visual access to ALL areas of the enclosure.

L. Install and initiate operation of negative pressure air filtration differential as required in Article 2.2 - Equipment. Negative pressure differential shall be at a minimum of -0.02" of water column at all times during asbestos removal operations.

M. Install and maintain a manometer equipped with a strip chart recorder. Manometer shall be capable of detecting at least 0.02" of water column.

N. The Contractor shall carry out all asbestos removal activities in a manner that will minimize pulverizing, breaking or creation of dust.

O. Keep the ACMs/ACCMs being removed wet throughout removal operations. In the event that visible dust is generated during the abatement process, also mist the air within containment periodically to reduce airborne asbestos fiber concentrations.

P. Once all removal activities have been completed, clean-up of the work areas shall be conducted in accordance with Article 3.4 - Clean-Up.

Q. Encapsulate entire work area with a penetrating and/or lock-down type encapsulant following acceptance of clean-up activities.

R. Dispose of all asbestos containing/contaminated waste; debris shall be kept wet at all times and be bagged while wet in accordance with Article 3.6 - Disposal Procedures.

1. ACCM waste is to be placed in unlabeled, clear plastic bags or wrapped in unlabeled plastic sheeting for disposal.

S. For small areas of wall plaster that require abatement, the following procedures shall be

used for the set-up and use of *Mini Containments*:

1. The mini containment shall be equipped with a HEPA filter equipped vacuum or a HEPA ventilation system to maintain negative pressure within the mini containment. Negative pressure must be maintained during the removal process.
2. All exposed ACMs/ACCMs within the mini containment must be encapsulated.
3. Tools and equipment used in the mini containment must be wet wiped until no visible residue remains. Wet wiped tools and equipment must be passed through the mini containment door in a sealed, leakproof container. The leakproof container must be opened only inside another mini containment or decontamination unit.
4. After the removal of the ACMs/ACCMs, encapsulation or enclosure is complete, the interior of the mini containment must be cleaned using HEPA filter equipped vacuuming, wet wiped, or both; or apply an encapsulant to the interior of the mini containment.
5. Before the mini containment is removed, a visual inspection of the interior and abated surfaces must be performed. If debris or material is still present, the interior of the mini containment must be recleaned.
6. Once the visual inspection is completed, the mini containment can be removed by sealing the door and collapsing the containment using a HEPA filter equipped vacuum or tearing down the mini containment after clearance air sampling indicated the fiber level is within the acceptable levels.

3.2 CLASS II ASBESTOS REMOVAL WORK (EXTERIOR)

The following procedure shall be utilized for all removal of non-friable/Class II asbestos-containing roofing products, including asphaltic roof membranes, flashings, and related mastics, and exterior stucco.

A. Contractor shall coordinate all items of work with the Project Environmental Consultant.

B. Contractor shall shut down and lock out all heating, cooling, and air conditioning system (HVAC) components that are in supply or pass through the work area. In the event that there is any impact to the HVAC system (such as a fresh air intake), the HVAC system shall remain off during the project.

C. Contractor shall shut down and lock out electric power to all Work Areas. Contractor shall provide temporary power and lighting sources, ensure safe installation of temporary power sources and equipment by compliance with all applicable electrical code requirements and Cal/OSHA requirements for temporary electrical systems. Protect each circuit with a Ground Fault Circuit Interrupter (GFCI) of proper size located in the temporary panel.

D. Contractor shall establish a regulated area around the perimeter of the designated work area. At a minimum, the regulated area shall consist of barrier tape and delineators at sufficient distance from the work area so that roofing debris does not fall outside of the regulated area based on current conditions at the site. The barrier tape may contain appropriate wording such as “DANGER ASBESTOS”. Appropriate signage and a worker decontamination unit shall be included, and part of the regulated area (see below).

E. Install worker decontamination unit described in Article 3.5 or as agreed upon with Project Environmental Consultant. If installation cannot occur on the roof, installation shall occur as close to the roof access as possible, with polyethylene sheeting laid-down between the decontamination unit and the roof access.

F. Post warning signs meeting the specifications of 8 CCR 1529, 8 CCR 5208, and 29 CFR 1926.1101, at any location and approaches to a location where airborne concentration of asbestos fibers may exceed ambient background levels. Signs shall be posted at a distance sufficiently far enough away from a work area to permit a person to read the sign and take necessary protective measures to avoid exposure (generally, at roof

accesses, or at least twenty feet from removal, if on roof).

G. Asbestos Handlers shall don personnel protective equipment as required in Article 2.2.A. Double-suiting is recommended if decontamination unit is not on roof or close by.

H. Pre-clean all vertical and horizontal surfaces within the work area using HEPA-filtered vacuum and/or wet cleaning techniques, as appropriate. Generally, this will include organic material or debris on the roof, roof- mounted duct work and equipment only; there is no need to pre-clean surfaces to be removed. Contractor shall not use methods that would raise dust, such as dry sweeping or vacuuming with equipment not equipped with HEPA filters and shall not disturb asbestos-containing materials during the pre-cleaning phase.

I. Seal off all windows, doorways, drains, ducts, skylights, roof penetrations, and any other openings between the Work Area and uncontaminated areas outside of the Work Area with six-mil fire retardant polyethylene sheeting and tape. Walls with mortar joints (e.g., tile) are considered porous. Openings through these walls must be sealed by critical barriers.

J. Place 6-mil plastic sheeting at the base of building underneath the work area and fasten to the building wall with tape to catch any roofing material debris that may fall from the roof during abatement. At a minimum, plastic sheeting shall be placed 10 feet out from the work area but must remain inside the regulated area. The regulated area and plastic sheeting may need to be extended based on site conditions at the time of abatement. Roofing material abatement shall not take place when wind speeds exceed 15 miles an hour.

K. The Contractor shall carry out all asbestos removal activities in a manner that will minimize pulverizing, breaking or creation of dust. Generally, manual removal methods will be preferred, although larger systems, such as mechanical shears for cutting membranes into strips, are acceptable, as long as they are equipped with proper shrouding and HEPA-filtration equipment. Remove asbestos-cement piping at joints if possible. Keep any breakage to a minimum.

L. Keep the ACMs/ACCMs being removed wet throughout removal operations. In the event that visible dust is generated during the abatement process, also mist the air within regulated area periodically to reduce airborne asbestos fiber concentrations.

1. Bags of asbestos waste shall not be dropped or thrown from the roof, but carefully lowered to the ground.

M. Once all removal activities have been completed, clean-up of the work areas shall be conducted in accordance with Article 3.4 - Clean-Up.

N. Encapsulate entire work area with a penetrating and/or lock-down type encapsulant following acceptance of clean-up activities.

O. Dispose of all asbestos containing/contaminated waste in accordance with Article 3.6 - Disposal Procedures.

P. Mini Containments may be used for abatement of small areas of exterior stucco. See Item 3.2, S above for installation, use, clean-up and removal of mini containments.

3.3 LBP/LEAD-CONTAINING SURFACE COATING IMPACTS – REMOVAL/DEMOLITION

This section applies to the removal of lead-based paints and/or the demolition of components coated with lead-based or lead-containing surface coatings, including lead-based paints, ceramic tiles with leaded glazing, lead-containing plumbing fixtures, and other such materials.

A. Post warning signs meeting the specifications of 8 CCR 1532.1 and 29 CFR 1926.62 at any location and approaches to a location where airborne concentrations of lead dust may exceed ambient background levels. Signs shall be posted at a distance sufficiently far enough away from a work area to permit a person to read the sign and take necessary protective measures to avoid exposure. Barrier tape shall be utilized in

conjunction with signs for exterior removal activities, to delineate the extent of regulated work areas.

B. Prepare appropriate fall protection systems in accordance with the requirements of Title 8 California Code of Regulations, Sections 1669, 1670, 1724 and anchoring guidance from Title 8 California Code of Regulations, Section 3283 (where applicable).

C. Install worker decontamination unit described in Article 3.5 or as agreed upon with Project Environmental Consultant.

D. Lead-containing material handlers involved in removal procedures shall wear disposable Tyvek suits, including gloves, hood and footwear. Minimum respiratory protective equipment shall be half-face air-purifying respirators equipped with P100 filters.

1. For exterior lead work, it is recommended that workers wear two (2) disposable Tyvek suits. Upon exiting the work area, the handlers shall HEPA vacuum all visible debris from the outer suit, dispose of it as lead- contaminated waste, and proceed through the decontamination unit for full decontamination.

E. Isolate work area by installing critical barriers or curtained doorways across all openings where airborne lead dust migration may cause secondary lead contamination (for work where components will be removed relatively intact, such as doors, downspouts, and wood trim, drop cloths will suffice). Establish regulated areas with delineators, barrier tape and lead signage for exterior work areas.

F. Cover floors in each work area with fire retardant polyethylene sheeting (do not cover floors where flooring finishes, such as ceramic flooring, for example, are to be removed).

1. A single layer of six-mil (minimum) sheeting.

2. Containment plastic shall be sized to minimize seams.

3. Where multiple layers of floor poly are utilized, sheeting shall be installed in a fashion so as to prevent slippage between successive layers of material.

G. Cover all immovable items and/or construct walls in the Work Area with fire retardant polyethylene sheeting. Walls that will be demolished do not necessarily need protection (check with Project Environmental Consultant).

1. Walls shall be covered with six-mil fire-retardant polyethylene sheeting (sealed airtight with duct tape).

2. Plastic shall be sized to minimize seams.

3. Wall sheeting shall overlap floor sheeting by at least 12 inches beyond the wall/floor joint to provide a better seal for negative pressure.

4. Wall sheeting shall be secured adequately to prevent it from falling away from the walls. This may require additional support/attachment when Negative Pressure Ventilation Systems area utilized.

5. Fire exits shall be clearly labeled with red tape or equivalent.

H. Where manual demolition is employed for lead removal, such as ceramic tile demolition (for example), periodically mist the work area and materials to be impacted to maintain a wet condition and avoid the creation of airborne dust, which may carry lead.

I. The Contractor shall carry out all impacts to lead-based surface coatings in a manner that will minimize pulverizing, breaking, abrading, or in any other way impacting lead-containing paints and generating airborne lead-containing dust.

J. Once all removal activities have been completed, clean-up of the work areas shall be conducted in accordance with Article 3.4 - Clean-Up.

K. Dispose of all lead-containing/contaminated waste in accordance with Article 3.6 - Disposal Procedures.

3.4 CLEAN-UP PROCEDURES

A. Remove and containerize all visible accumulations of ACMs, LBPs, and asbestos/lead-contaminated debris utilizing rubber dust pans and rubber squeegees to move material around. Do not use metal shovels to pick up or move accumulated waste within contained work areas.

Asbestos-containing/contaminated waste shall be placed in leak tight disposal bags. Disposal bags shall be doubled six-mil polyethylene, pre-printed with labels as required by EPA regulation 40 CFR 61.152 (b) (I) (iv), Cal/OSHA (Title 8 CCR Sections 1529 and 5208), SCAQMD Rule 1403, and if applicable Title 22 CCR Section 66504.

Lead-containing wastes shall be containerized in 55-gallon steel drums with labels as required by 8 CCR 1532.1 and 22 CCR 66504.

All other hazardous wastes shall be containerized as appropriate and disposed of in a manner that satisfies the requirements for waste characterization and disposal in accordance with the requirements of Title 22 of the California Code of Regulations, Sections 66243, et seq., and Sections 25157.8, et al, of the California Health and Safety Code.

B. Whether cleaning an asbestos work area or a lead work area (or both), wet clean all surfaces in the work area utilizing rags, mops and sponges, and clean all horizontal surfaces within each work area with a HEPA-vacuum, as appropriate.

C. Remove the cleaned layer of polyethylene sheeting from floors and walls, as applicable. Windows, doors, HVAC system vents and all other openings (critical barriers, if employed) shall remain sealed. Dispose of as asbestos- contaminated or lead-contaminated as appropriate to the work area in question.

D. After gross cleaning of the work area, HEPA-vacuum and wet clean all objects and surfaces in the work area are completed, remove all containerized waste from the work area.

E. Decontaminate all tools and equipment and remove at the appropriate time in the cleaning sequence.

F. Project Environmental Consultant will inspect the work area for visible residue. If any accumulation of residue is observed, it will be assumed to be asbestos and/or lead, as appropriate to the work area, and a second settling period and cleaning cycle repeated at no additional cost to Owner.

G. Following the satisfactory completion of clearance air monitoring or clearance wipe testing, the remaining barriers may be removed and prepared for proper disposal. A final visual inspection by Project Environmental Consultant will be performed. Unsatisfactory conditions may require additional cleaning and air monitoring/wipe sampling, at no additional cost to Owner.

3.5 WORKER DECONTAMINATION SYSTEMS

A. Worker decontamination enclosure systems shall be provided at all locations where workers will enter or exit the work area. At a minimum, one three- stage system at a single location is preferred. Each work area where negative pressure enclosure is the selected method of engineering controls shall have a worker decontamination unit.

B. Worker decontamination enclosure systems constructed at the Project site shall utilize six-mil, fire-retardant polyethylene sheeting, or other approved materials for privacy.

C. Personnel Decontamination Units shall not be located inside the work area(s) unless specifically authorized by the Project Environmental Consultant.

D. Alternate methods of providing Decontamination facilities may be submitted to the Project Environmental Consultant for approval. Do not proceed with any such method(s) without the written authorization.

E. The worker decontamination enclosure system shall consist of at least a cleansing station in accordance with the requirements of 8 CCR 1527 and 8 CCR 1529, equipped with adequate water, towels and cleansing agents to accommodate the entire crew and

visitors.

3.6 DISPOSAL PROCEDURES

A. All friable asbestos waste shall be disposed of as Hazardous, Friable Asbestos Waste.

All non-friable asbestos waste shall be disposed of as Non-Hazardous, Non- Friable Asbestos Waste.

All ACCM waste shall be disposed of as non-regulated waste (construction debris) unless co-mingled with friable or non-friable asbestos waste, see above.

Contractor is responsible for characterization of lead waste prior to waste being transported off site. All waste characterization samples must be taken under the supervision of the Project Environmental Consultant. Characterization sample results must be submitted to the Owner and/or

Project Environmental Consultant for review prior to waste being transported off site. Refer to Section 1.12.B.8 of this specification.

All asbestos-containing waste shall be placed and stored in clear, sealed, leak-tight and appropriately labeled containers, in accordance with 8 CCR 1529 and SCAQMD Rule 1403.

All ACM waste shall be stored in a locking metal storage bin or in an enclosed, lockable location approved by the Owner and/or Environmental Consultant. The interior of the waste storage location shall be lined with two

(2) layers of 6-mil plastic sheeting on walls, floors, and ceiling. Signage in accordance with SCAQMD Rule 1403 shall be affixed to the entry and sides of the asbestos waste storage location. Signage in accordance with 8 CCR 1529 shall be placed as described above for lead waste storage locations. The waste storage location shall remain locked when not in use. Wastes generated during abatement shall be stored in the waste location at the end of the work shift until finally transported to an appropriate landfill for disposal.

Friable and non-friable asbestos waste shall not be co-mingled but stored separately.

B. All lead wastes shall be either disposed of as construction debris (if STLC/TCLP results allow) or lead-containing waste (with attendant RCRA codes, if STLC/TCLP results so require).

C. All hazardous wastes (including non-hazardous asbestos wastes) must be disposed of by a certified waste hauler approved by the Owner.

D. Arrange for proper disposal of any generated hazardous waste stream through an Owner-approved waste disposal facility.

E. Obtain the EPA Hazardous Waste Generator Identification Number and State of California Hazardous Waste Tax Identification Number from the Owner.

F. All hazardous waste manifests, non-hazardous material data forms and bills of lading shall be delivered to the Project Environmental Consultant. Record keeping format shall utilize a chain of custody form which includes the names and addresses of the Generator (Owner), Contractor, Waste Hauler, pickup site, disposal site, the estimated quantity of the asbestos waste and the type of containers used. The form shall be signed by the Generator, Contractor, Waste Hauler and the Disposal Site Operator, as the responsibility for the material changes hands.

3.7 REESTABLISHMENT OF THE WORK AREAS

A. Reestablishment of the work area shall only occur following the completion of clean-up procedures and after clearance air monitoring has been performed and documented to the satisfaction of the Owner Representative or Project Environmental Consultant.

B. Contractor and Owner Representative or Project Environmental Consultant shall visually inspect the work area for any remaining visible residue. Evidence of contamination will necessitate additional cleaning and air monitoring requirements at no additional cost to

Owner, until approved by Project Environmental Consultant.

C. Upon approval by Owner Representative or Project Environmental Consultant, the Contractor shall remove remaining fire-retardant polyethylene sheeting, critical barriers, and decontamination unit.

D. Repair all areas of damage that occurred as a result of abatement activities at no additional cost to Owner, unless other arrangements and written approval have been provided by the Owner.

3.8 ENVIRONMENTAL MONITORING

Stop Work Order Due to Inefficiencies:

If, at any time, the Owner Representative or Project Environmental Consultant decides work practices are violating Specifications, or, Federal or local regulations to extent of potential endangerment of building users, workers, Owner Representative, employees or public, he/she will immediately notify Contractor (followed up in writing) that operations shall cease until corrective action is taken by Contractor. Contractor shall take such corrective action before proceeding with work. Loss or damage due to Stop Work Order(s) shall be Contractor's responsibility. A Stop Work Order, issued by Owner's Representative or Project Environmental Consultant shall become effective immediately.

A. Air monitoring may be carried out by the Project Environmental Consultant on behalf of the Owner to verify that the building beyond the contamination area and the outside environment remains uncontaminated.

B. Area Air Monitoring: The Project Environmental Consultant will conduct in- progress air monitoring daily to determine area airborne contaminant concentrations within the confines of the work area.

Environmental Air Sampling: Ambient air samples are taken and analyzed to indicate fiber migration from containment to the environment. Should any environmental sample outside work areas exceed the base line of 0.01 f/cc of air, all work will immediately halt except for corrective work. The Project Environmental Consultant shall determine the source of the high fiber count and notify the contractor with directions for the corrective action.

C. Clearance Air/Wipe Monitoring:

1. Following the completion of final clean-up operations, notify the Owner Representative and/or Project Environmental Consultant that work areas are ready for final inspection and clearance air monitoring (asbestos).

2. Project Environmental Consultant will then sample the air in the interior work area for airborne fiber concentrations.

3. Phase Contrast Microscopy (PCM): In each homogeneous work area after completion of all cleaning work, a minimum number of samples will be collected and analyzed in accordance with the NIOSH 7400 Methodology.

   a. Release Criteria: Decontamination of the work site is complete when each sample analyzed reveals airborne asbestos fiber concentrations are at or below 0.010 f/cc.

   b. If these conditions are not met, then the decontamination is incomplete, and the cleaning procedures noted in Article 3.4 above shall be repeated. The area shall be re-tested at no additional cost to Owner until satisfactory levels are obtained.

4. For work associated with LBPs, wipe sampling shall be performed within the controlled work areas following completion of all lead-related impact and decontamination efforts.

   a. Release Criteria: Decontamination of the work site is complete when each of at least two samples per work area are analyzed and reveal lead concentrations below those set forth in 17 CCR 35001, et. seq. Generally, this shall be 40 micrograms of lead per square foot for interior

horizontal surfaces and 400 micrograms of lead per square foot of area on exterior surfaces.

b. If these conditions are not met then the decontamination is incomplete and the cleaning procedures noted in Article 3.5 above shall be repeated. The area shall be re-tested at no additional cost to Owner until satisfactory levels are obtained.

3.9 OSHA PERSONNEL AIR MONITORING

A. Air monitoring required by OSHA is the responsibility of the contractor. The contractor is responsible for providing daily OSHA compliance monitoring as per 29 CFR 1926.1101, 8 CCR 1529 for asbestos and 29 CFR 1926.62 and 8 CCR 1532.1 for lead.

1. At minimum, Contractor shall conduct representative (25% of crew) breathing zone personal air monitoring of its employees twice each shift (asbestos only) and repeated daily or until a "negative exposure assessment", as derived in accordance with 29 CFR 1926.1101 (f)(2)(iii) and 8 CCR 1529 for asbestos, and 8 CCR 1532.1 for lead.

2. Monitoring shall be conducted by a qualified air professional experienced and knowledgeable about the methods of air monitoring and in accordance with 29 CFR 1926.1101, 8 CCR 1529 and 8 CCR 1532.1.

3. Monitoring results and appropriate laboratory analysis work shall be submitted to the Owner Representative or Project Environmental Consultant within 24 hours of when the samples were collected.

3.10 ALTERNATIVE PROCEDURES

A. If specified procedures cannot be utilized, a request shall be made in writing to Project Environmental Consultant providing details of the problem encountered and recommended alternatives.

B. The removal of all “other” hazardous materials shall be handled as an alternative procedure. Contractor shall submit a work plan for the removal, handling, and disposal of all “other” hazardous materials, including but not limited to suspect ACMs not previously sampled (see Article 1.2.M), suspect LBP not previously sampled, fluorescent light ballasts and tubes, mercury switches, refrigerants, batteries, and radioactive smoke detector sources. Work described in said work plan(s) shall not commence until the work plan has been accepted and approved, in writing, by Project Environmental Consultant and Owner Representative.

C. Alternative procedures shall provide equivalent or greater protection than procedures that are replaced.

D. Any alternative procedure must be approved in writing by the Project Environmental Consultant and the Owner Representative prior to the implementation of the procedure.

END OF SECTION

DIVISION 03

CONCRETE

SECTION 03 10 00
CONCRETE FORMWORK

PART 1 - GENERAL

1.01 SUMMARY

A. Provide the finish work of this Section as indicated on drawings and specified herein and needed for a complete proper installation.

B. Provide and secure formwork, ties, shoring, bracing, anchorage and blockouts.

C. Related Requirements: The General Provisions of the Contract Documents affecting the work of this Section includes but not necessarily limited to General Conditions, Supplementary Conditions and Sections of Division 1 of the Project Manual.

1.02 RELATED WORK

A. Site work.

B. Reinforcing.

C. Cast-in-place concrete.

D. Masonry

1.03 QUALITY ASSURANCE

A. Construct and erect formwork in accordance with ACI 318, 347 and as required indicated on Structural Drawings.

B. Design forms and falsework to adequately support live and dead loads, including equipment, concrete drops, pressures of foundations, etc.

1.04 CODES AND STANDARDS

A. Title 24, Part 2, C.C.R., 2013 C.B.C.

B. Follow recommendations of ACI 318 and 347.

1.05 ARCHITECT REVIEW

Architect will review for general architectural applications only. Design of formwork for structural stability and sufficiency is the sole responsibility of the workers and contractors.

PART 2 - PRODUCTS

2.01 EARTHEN FORMS

A. Provide earthen forms as indicated on drawings only for footings where the soil is firm and stable and the concrete will not be exposed, and as approved or directed. Cut earthen forms square, neat and accurate to size. Clean bottoms of excavations.

2.02 WOOD FORMS

A. Provide APA Plyform of B-B Class I exterior, high density overlaid one side for forms, sound, undamaged, and clean, 5/8 inch thick minimum.

2.03 LUMBER

A. Provide douglas fir, construction grade lumber for forming, studding and bracing.

2.04 ACCESSORIES

A. Provide nails, spikes, lag bolts, through bolts and anchorages required, of sufficient strength, length and character to maintain formwork during pouring operations.

B. Use snap-off, removable, or adjustable type metal ties. All metal is to be hot-dip galvanized. Provide standard metal form clamp assembly spreader type, leaving no metal within 1 inch of concrete exposed face. Leave inner tie rod within concrete when forms are removed.

C. Provide colorless mineral oil type form coating, non-grain raising and non-staining type, Noxcrete's Non-Crete Form Coating, Arcal Chemical's Arcalo 80, Industrial Synthetic's Synthex, or other approved.

D. Rigid foam plastic fillets may be used for chamfered corners.

2.05 FORMED CONSTRUCTION JOINTS

A. Provide galvanized steel or extruded plastic tongue and groove type, with knock-out holes at 6 inches on centers.

2.06 DOVETAIL ANCHOR SLOTS

A. Provide minimum 24 gage galvanized steel foam filled type, with release tape sealed slots, bent tab anchors, securable to formwork.

2.07 COLD JOINTS

A. Provide standard metal keyed dividers for cold joints, subject to approval.

2.08 ANCHORS AND HANGERS

A. Use anchors which do not leave exposed metal at surface.

PART 3 - EXECUTION

3.01 INSPECTION

A. Prior to commencing work, inspect the work of others and verify that such work has been properly completed and installed to allow for proper installation of all materials and methods required of this section.

3.02 FORMING

A. Earthen forms: Foundation concrete may be placed directly into neat excavations provided the foundation trench walls are stable as determined by the architect and Geotechnical Engineer, subject to the approval of the Division of the State Architect. In such case, the minimum formwork shown on the drawings is mandatory to insure clean excavations immediately prior to and curing the placing of concrete. Trench earthen forms at least two inches wider than footing widths shown on drawings. Construct wood edge strips at each side of trench at top to secure reinforcing and prevent trench from caving. Form sides of footings where earth caves. Tamp form and clean all debris and loose materials in earthen forms before depositing concrete.

B. Design forms and shoring to resist all anticipated loads.

C. Verify accuracy of lines, levels, and centers.

D. Construct formwork and appurtenances to meet design and code requirements. Construct of sound materials, of correct shape and dimensions, mortar tight and of sufficient strength to prevent sagging, buckling, movement and failures. Provide adequate shores of wood or metal to safely carry imposed loads and adjustable to prevent displacements during the work.

E. Align joints and make them watertight.

F. Set reinforcing accurately and ensure secure placement.

G. Maintain tolerances of ACI 347, within 1/8 inch in 10 feet.

H. Assist in setting and placing blockouts and sleeves for materials and products to be embedded in and passing through concrete. Comply with CCR Title 24 Section 1906.3.

I. Provide ports and openings to facilitate inspection and cleaning.

J. Chamfer all corners 1 inch unless shown otherwise.

K. Set screeds and establish levels for tops of concrete for finish surfaces. Shape surfaces as indicated on drawings.

L. Screed supports for concrete over waterproof membranes or vapor barriers should be of a cradle, pad, or base type which will not puncture membrane.

M. Wet formwork prior to placing concrete and keep wet during concrete curing process.

3.03 FORM REMOVAL

A. Do not remove formwork, shoring and bracing until such time as masonry and concrete has gained sufficient strength to carry its own weight, and construction and design loads which are liable to be imposed upon it. Verify strengths by compressive strength test results. Loosen forms carefully. Do not wedge pry bars, hammers or other tools against masonry and concrete surfaces. Comply with Section 1906.2, Title 24.

B. The following are minimum times for forms and shoring to remain in place prior to removal:

1. Footings and grade beams - 1 days.

2. Walls and columns - 2 days.

3. Beam sides - 3days.

4. Beam and slab soffits – 3 days.

C. Cut nails and form ties off flush and leave all surfaces smooth and clean.

D. Forms shall not be removed from concrete that is still “green”, i.e. the concrete is still moist.

END OF SECTION 03 10 00

SECTION 03 15 13
WATERSTOPS

PART 1 - GENERAL

1.01 SUMMARY

A. Section Includes:
   1. Hydrophillic strip waterstops. (swelling waterstops)
   2. Supplementary components and accessories normally furnished or necessary for a complete installation, whether or not such items are indicated on the Drawings or included in the Specifications.

1.02 SECTION REQUIREMENTS

A. Submittals: Submit product data and shop drawings.

PART 2 - PRODUCTS

2.01 HYDROPHILLIC STRIP WATERSTOPS (SWELLING WATERSTOPS)

A. Description: Waterstops made from strips of rubber modified with a hydrophilic agent (e.g., bentonite) that swell in the presence of moisture to effectively seal construction joints.

B. Applications: Used for sealing cold joints in concrete, to prevent water migration through construction joints below grade, and at shotcrete lift joints.

C. Products: Provide one of the following, or equal.
   1. “Waterstop-RX” manufactured by CETCO.
   2. “Adcor ES” manufactured by GCP Applied Technologies.
   3. “Hydro-Flex HF302” manufactured by Henry Co.
   4. “Superstop” manufactured by Tremco, Inc.

D. Requisite Properties:
   1. Size: At least one inch by 1-1/2 inches.
   2. Cross-Section Shape: Rectangle.

2.02 ACCESSORIES

A. Primer and Adhesive: Supplied, required, recommended, or accepted by the manufacturer for actual products and in-service conditions applicable to the project.

B. Other Accessories: Provide accessories and secondary items normally furnished or necessary for a complete installation; or supplied, required, recommended, or accepted by the manufacturer for actual in-service conditions applicable to the project.

PART 3 - EXECUTION

3.01 INSTALLATION REQUIREMENTS

A. General:
   1. Ensure proper supervision practices are followed at the project site before the installer begins work and at all times during installation.
   2. Verify in-place supporting and adjacent construction conforms to the manufacturer's requirements or recommendations and satisfies all other conditions that might affect the quality of installation or the durability, appearance, or performance of installed waterstops and adjacent items.
   3. Install waterstops using materials and methods required, recommended, or accepted by the manufacturer, along with manufacturer-recommended accessories and techniques.
   4. Set items true to line, to required levels and lines, and plumb, level, and square, without warp or rack, with flush well-fitted joints, and in alignment with adjacent construction.
   5. Perform drilling and fitting as required or necessary for an accurate fit and complete installation.
   6. Securely attach waterstops in place to supporting construction.
   7. Installed waterstops must be warrantable. Do not install, correct, or replace waterstops in a manner that results in any warranty or guarantee becoming void.

B. Installation Tolerances: Install waterstops to an allowable tolerance variation of not more than 1/4-inch from true position and not more than 1/8-inch and from plumb, level, and alignment.

C. Correction and Repair:
   1. Correct deficiencies that do not conform to the Contract Documents.
   2. Repair non-conforming, damaged and defective work.
   3. Replace soiled items that cannot be cleaned to the same condition as new.

D. Protection:
   1. Protect installed waterstops in place from soiling, deterioration, and damage until Substantial Completion.
   2. Remove protection when it's no longer needed and before Substantial Completion.

END OF SECTION

©AWCWEST 18E22 All rights reserved.
TAGDSC, ELMTA, CLSA1010, CLSA2010

SECTION 03 20 00
CONCRETE REINFORCEMENT

PART 1 - GENERAL

1.01 SUMMARY

A. Provide reinforcing steel bars, welded wire fabric, support chairs, bolsters, bar supports and spacers as indicated on the drawings as specified herein and needed for a complete and proper installation.

B. Related Requirements: The General Provisions of the Contract Documents affecting the work of this Section to include but not necessarily limited to the General Conditions, Supplementary Conditions and Sections of Division 1 of the Project Manual.

1.02 RELATED WORK

A. Site Concrete.

B. Formwork.

C. Cast-in-place concrete.

D. Concrete Unit Masonry.

1.03 QUALITY ASSURANCE

A. Perform reinforcing work in strict conformance with CRSI unless specified otherwise or required otherwise by local code jurisdiction.

1.04 CODES AND STANDARDS

A. Title 24, Part 2, C.C.R., 2013 C.B.C., Chapter 19A and applicable Sections.

B. In addition to CRSI specifications, follow ACI 315 and 318, AWS welding codes and qualifications, and ASTM A185, A305, A615, and A706.

C. Testing of bars in accordance with Title 24, Part 2, C.C.R., 2013 C.B.C. Section 1903A and 1913A.2.

1.05. TESTING

A. Where samples are taken from bundles as delivered from the mill, with the bundles identified as to heat number, and provided the mill analyses accompany the report, then one tensile test and one bend test shall be made from a specimen from each 10 tons or fraction, of each size of reinforcing steel.

B. Where positive identification of the heat number cannot be made or where random samples are to be taken, then one series of tests shall be made from each 2-1/2 tons or fraction, of each size of reinforcing steel.

C. Comply with Title 24, Part 2, C.C.R., 2013 C.B.C., Chapter 17A & Section 1913A.2.

D. Comply with Section 01 25 43 of Division 1.

1.06 STORAGE

A. Do not allow reinforcing materials to have direct contact with the ground. Cover materials adequately to prevent rusting, and contact with materials or construction injurious to proper bonding.

PART 2 - PRODUCTS

2.01 REINFORCING BARS

A. Deformed billet steel bars, ASTM A615, plain finish, see drawings for grade. ASTM A706 for bars to be welded, and elsewhere as defined on drawings.

2.02 WELDED WIRE FABRIC

A. Provide plain type, ASTM A185, in coiled rolls, or flat sheets, plain finished, void of rust, dust, scale, paint, grease and other coatings, conforming to UBC Standard 19-1.

2.03 ACCESSORIES

A. Provide minimum 16 gage galvanized annealed tie wires, and chairs, bolsters, bar supports, and spacers sized and shaped for strength and support of reinforcing. Plastic accessories may be acceptable if approved by Architect prior to use.

2.04 FABRICATION AND MANUFACTURE

A. Fabricate in accordance with details shown.

B. Accurately bend, cut and place bars as shown on drawings. Bend bars cold; heating of bars is not permissible. Do not bend or straighten bars in any manner that will injure materials. Comply with Title 24, Section 1907A.2 and 3.

C. Welding: All welded reinforcing steel shall be A.S.T.M. A706. Perform welding, where shown or approved, by the direct electric arc process in accordance with AWS D1.4 using 90 series low hydrogen electrodes. Preheat 6 inches each side of joint. Protect joints from drafts during cooling process; accelerated cooling is prohibited. Do not tack weld bars. Clean metal surfaces to be welded of all loose scale and foreign materials. Clean welds each time electrode is changed and chip burned edges before placing welds. When wire brushed, completed welds must exhibit uniform section, smooth welded metal, feather edges without undercuts or overlays, freedom from porosity and clinkers, and good fusion and penetration into the base metal. Cut out welds or parts of welds found defective, with chisel, and replace with proper welding. Comply to Title 24, Section 1903A.7.

1. Employ only experienced AWS certified welding operators.

2. Prequalification of welds are to be in accordance with code and carbon equivalent of reinforcing not exceeding 0.75.

PART 3 - EXECUTION

3.01 INSPECTION

A. Prior to commencing work of this section, inspect work of others and verify that such work has been properly completed and installed to allow for proper installation of all materials and methods required of this section. Inspection of welding shall be done by a special inspector approved by D.S.A., services retained and paid for by the Owner.

3.02 INSTALLATION

A. Fabricate reinforcing in accordance with ACI 315. Locate reinforcing splices not shown on drawings, at mid span. Where shown or required, weld reinforcing bars in accordance with AWS D1.4 (1989).

B. Place reinforcing supported and secured against displacement. Do not deviate from true alignment.

C. Ensure that reinforcing used is clean, free of scale, dirt, dust, rust and other matter.

D. Provide a minimum splice for bars noted as "cont.", typical wall reinforcing, no splices in concrete column reinforcing. Provide a standard lap of 48 bar diameters in masonry and 36 bar diameters in concrete, and in no case less than 24 inches. Wire all laps and splices in welded wire mesh and provide side and end laps of at least 8 inches.

1. Spacing - minimum center-to-center distance between parallel reinforcing bars is to be in compliance with that shown on drawings, or in the absence of such information on drawings, the clear spacing is to be 1-1/2 bar diameter, but in no case less than 1-1/2 inch, nor 1-1/3 times the maximum size of aggregate.

2. Where possible, stagger splices of adjacent bars.

E. Only splice reinforcing where shown or noted. Splices at other locations must be approved by the Architect or Structural Engineer. Provide continuous reinforcement between splice locations in vertical walls. No splices of vertical wall reinforcing may occur except at foundations, unless specifically approved by the Architect or Structural Engineer..

1. Securely tie reinforcing with 16 gage tie wire at all splices and intersections, and as may be directed.

2. Point ends of wire ties away from forms.

F. Stagger splices in adjacent horizontal wall reinforcing bars a minimum of 4 feet.

G. Provide dowels in footings and/or grade beams the same size and number as vertical wall or column reinforcing. Provide a minimum dowel protection equal to standard lap splices unless noted otherwise.

1. Secure tie dowels in place before depositing concrete. Install No. 3 bars for securing dowels where no other reinforcement is provided.

H. Provide the minimum coverage of reinforcing by concrete:

Below grade (unformed)	3 inches clear
Below grade (formed)	2 inches clear
Walls	2 inch clear
Columns, beams	2-1/2 inches clear

3.03 CORRECTION DURING CONCRETING

A. Maintain capable steel workers during placement of concrete for properly resetting reinforcement displaced by runways, workers, or other causes.

3.04 DEFECTIVE WORK

A. The following reinforcing work will be considered defective and may be ordered by Owner to be removed and replaced at no additional expense to Owner.

1. Bars with kinks or bends not shown on drawings.

2. Bars injured due to bending or straightening.

3. Bars heated for bending.

4. Reinforcement not placed in accordance with drawings or specifications.

5. Rusty or oily reinforcement.

6. Re-bent bars.

3.05 INSPECTIONS

A. 48 hours prior to pouring concrete, notify the architect, structural engineer and D.S.A. that reinforcing is ready for inspection. Secure approvals by testing laboratory and inspector before concrete operations are commenced.

END OF SECTION 03 20 00

SECTION 03 30 00
CAST-IN-PLACE CONCRETE

PART 1 - GENERAL

1.01 SUMMARY

A. General Provisions apply to this section.

B. Section Includes:
   1. Cast-in-place concrete placement and finishing.

C. Related Sections:
   1. Section 30 10 00: Concrete Forms and Accessories.
   2. Section 03 20 00: Concrete Reinforcement.

1.02 SUBMITTALS

A. Shop Drawings: Submit Shop Drawings indicating locations of cast-in-place concrete Work and accessory items such as vapor barriers. Include details and locations of reinforcing, embedded items, and interfacing with other Work.

B. Product Data:
   1. Mix Design: Submit a concrete mix design for each mix that will be provided for the Work. Include water/ cement ratio, size of coarse aggregate and amount of any admixture. Predict minimum compressive strength, maximum slump and air content percentage.
   2. Manufacturer of ready-mixed concrete shall deliver to the ior a certificate with each mixer truck. Certificate shall bear the signature of representative of the testing laboratory, and shall state quantity of cement, water, fine and coarse aggregate and admixtures.

C. Material Samples: Submit Samples illustrating concrete finishes, minimum 12 inches x 12 inches in size.

D. Certificates: Submit a notarized certificate that each of following conforms to standards indicated:
   1. Aggregates – ASTM Standards C33
   2. Admixtures - ASTM Standards C260
   3. Curing materials - ASTM Standards C171

1.03 QUALITY ASSURANCE

A. Comply with the following as a minimum requirement.

B. American Concrete Institute (ACI) Publication:
   1. ACI 211 - Recommended Practice for Selecting Proportions of Concrete.
   2. ACI 304 - Recommended Practice for Measuring, Mixing, Transporting and Placing Concrete.
   3. ACI 305 - Recommended Practice for Hot Weather Concreting.

4. ACI 306 - Recommended Practice for Cold Weather Concreting.
5. ACI 308 - Recommended Practice for Curing Concrete.
6. ACI 309 - Recommended Practice for Consolidation of Concrete.

C. American Society for Testing and Materials (ASTM) Standards:
1. ASTM A 185 - Welded Steel Wire Fabric For Concrete Reinforcement.
2. ASTM C 31 - Making and Curing Concrete Test Specimens in the Field.
3. ASTM C 33 - Concrete Aggregates.
4. ASTM C 39 - Compressive Strength of Cylindrical Concrete Specimens.
5. ASTM C 88 - Soundness of Aggregates by use of Sulphate or Magnesium Sulphate.
6. ASTM C 94 - Ready-Mixed Concrete.
7. ASTM C 143 - Slump of Hydraulic Cement Concrete.
8. ASTM C 150 - Portland Cement.
9. ASTM C 171 - Sheet Materials for Curing Concrete.
10. ASTM C 172 - Sampling Freshly Mixed Concrete.
11. ASTM C 173 - Air Content of Freshly Mixed Concrete by the Volumetric Method.
12. ASTM C 227 - Potential Alkali Reactivity of Cement-Aggregate Combinations (Mortar-Bar Method).
13. ASTM C 231 - Air Content of Freshly Mixed Concrete by the Pressure Method.
14. ASTM C 260 - Air-Entraining Admixtures for Concrete.
15. ASTM C 289 - Potential Reactivity of Aggregates (Chemical Method).
16. ASTM D 1751 - Preformed Expansion Joint Fillers for Concrete Paving and Structural Construction (Non-extruding and Resilient Bituminous Types).

D. Continuous inspection shall be provided at the batch plant and for transit-mixed concrete to run check sieve analysis of aggregate, check moisture content of fine aggregate, check design of mix, check cement being used with test reports, check loading of mixer trucks, and certify to quantities of materials placed in each mixer truck.

E. Inspection shall be performed by a representative of a testing laboratory selected by the Owner. Owner will pay for inspection costs. Notify the laboratory 24 hours in advance of time concrete is to be mixed. Notify the laboratory of postponement or cancellation of mixing within at least 24 hours of scheduling time.

F. Continuous batch plant inspection requirement may be waived in accordance with CBC section 1929 A. 5. Waiver shall be in writing, including DSA approval.

G. Strength Test of Concrete: Refer to Section 01 45 23: Testing and Inspection.

1.04 DELIVERY, STORAGE AND HANDLING

A. Mixing and Placing Concrete: Refer to Section 01 45 23: Testing and Inspection.

B. Ready-mix concrete shall be mixed and delivered in accordance with ASTM C 94 and CBC Standard 19-3 and 19-4. Each batch of concrete delivered to the Project site shall be accompanied by a time slip bearing departure time and signature of batch plant supervisor. Concrete shall be placed within 90 minutes after start of mixing.

C. Store cement and aggregate materials so as to prevent their deterioration or intrusion by foreign matter. Deteriorated or contaminated materials shall not be furnished.

1.05 JOB CONDITIONS

A. Cold Weather Requirements:
1. Adequate equipment shall be provided for heating concrete materials and protecting concrete during freezing or near-freezing weather. Surfaces, in which concrete is to come in contact with, shall be free from frost or ice. No frozen materials or materials containing ice shall be furnished.
2. When placing concrete during freezing or near-freezing weather the mix shall have a temperature of at least 50 degrees F., but not more than 90 degrees F. when cement is added. Concrete shall be maintained at a temperature of at least 50 degrees F. for at least 72 hours after placing or until it has thoroughly hydrated. When necessary, concrete materials shall be heated before mixing. Special precautions shall be provided for protection of transit-mixed concrete.

B. Hot Weather Requirements:
1. During hot weather, proper attention shall be provided for ingredients, production methods, handling, placing, protection and curing, to prevent excessive concrete temperatures or water evaporation which could impair required strength or durability.

PART 2 - PRODUCTS

2.01 GENERAL

A. Ready-Mixed Concrete: Mix and deliver in accordance with requirements of CBC Chapter 1905A.

B. Strength of Concrete: Concrete, unless otherwise indicated or specified, shall be provided with a minimum ultimate 28-day strength of 3000 psi (f'c). For high-early-strength concrete, age for reaching the f'c shall be as indicated on Drawings.

2.02 MATERIALS

A. Cement: ASTM C 150. Furnished cement shall be as selected and reviewed for concrete proportioning.

B. Aggregates: Aggregates shall conform to ASTM C 33 and C 227 except as modified herein. Any suitable individual grading of coarse aggregate may be furnished, provided Grading of Combined Aggregate indicated in following table is obtained. Refer to Section 01 45 23: Testing and Inspection.

GRADING OF COMBINED AGGREGATE			
Sieve Sumber or Size in inches	**1-1/2" Maximum**	**1" Maximum**	**3/4" Maximum**
Passing a 2"	------	------	------
Passing a 1-1/2"	95-100	------	------
Passing a 1"	70-90	90-100	------
Passing a 3/4"	50-80	70-95	90-100
Passing a 3/8"	40-60	45-70	55-75
Passing a No. 4	35-55	35-55	40-60
Passing a No. 8	25-40	27-45	30-46
Passing a No. 16	16-34	20-38	23-40
Passing a No. 30	12-25	12-27	13-28
Passing a No. 50	2-12	5-15	5-15
Passing a No. 100	0-3	0-5	0-5

C. Water: Water shall be potable and free from deleterious matter.

D. Admixtures: CBC Chapter 19A, Section 1903A.6, Type A or D.

E. Expansion Joint Fillers: Preformed strips, non-extruding and resilient bituminous type, of thickness indicated, conforming to ASTM D 1751.

F. Curing Paper and Liquid Curing Compounds:

1. Curing Paper: A standard brand conforming to ASTM C 171, Type 1 - Regular, Kure-N-Seal.
2. Liquid Curing Compounds: A standard brand, clear liquid conforming to ASTM C 309, Master Builders, Grace, Antihydro.

G. Abrasive Aggregate: Norton Alundum, Union Carbide Carborundum, or equal, graded #12 through #30 sizes, color as selected by Architect.

H. Underlayment: Latex underlayment for filling low spots in concrete shall be Tile-Tex by Flintkote Co., Webtex #60 or Fixallatex by Dowman Products Co.

I. Vapor Barrier: ASTM D 21O3, polyethylene sheeting, clear, 10 mils minimum thickness, impact strength greater than 70 grams per mil, 10 feet minimum width. Provide minimum 2-inch wide waterproof plastic self-adhering tape for sealing edges and ends of sheeting.

1. Moisture barrier is required where an interior area is scheduled to receive moisture sensitive floor finishes.

J. Stair Strips and Nosing:

1. Fabricated from 6063-T5 extruded aluminum, mill finish. Anti-slip filler shall contain at least 60 percent virgin grain aluminum oxide abrasive. Binder shall be fully cured resilient type epoxy, with binder-to-filler ratio of 13 percent. The epoxy-abrasive filler shall extend over the curved front edge of the nosing and shall be securely bonded to the extruded aluminum base.
2. Manufactured by Wooster Products Inc. American Safety Tread Co. Inc., or equal.

3. Nosing and strips for concrete casting shall be provided with Sure-Hold anchors, chevron shaped continuous full length of nosing or strip.
4. Nosings and anchors for attachment to hydrated concrete stairs and wood stairs shall be similar to those specified below, except they shall be provided with countersunk holes for screws and fasteners.
5. Colors: As selected by Architect to contrast with stair color. Colors shall extend uniformly through the filler.
6. Strip and Nosing Types:

    a. Nosings for sloped riser steel pan stairs: Type WP4J, 4-1/16 inches wide, 3/8 inch thick.
    b. Nosings for new concrete stairs: Type WP4C, 4-1/16 inches wide, 3/8 inch thick, nose projects down 1/4 inch.
    c. Nosings for square edged steel pan stairs: Type WP4SP, 4-1/16 inches wide, 3/8 inch thick nose.
    d. Strips for recessing into concrete stairs: Type WP1A, except 2-1/4 inches wide, 3/8 inch thick. American Safety Tread Co., Type 24, or equal.
    e. Strips for adhering to existing or hydrated concrete: Flex-Tred anti-safety strips, minimum 2-1/4 inches wide. Cut from rolls and round corners.
    f. Strips for anchoring into wood or stone: American Safety Tread Co., Type 24H, or equal, with holes for fasteners, 2-1/4 inches wide.

PART 3 - EXECUTION

3.01 GENERAL

A. Time of Placing: Do not place concrete until reinforcement, conduits, outlet boxes, anchors, hangers, sleeves, bolts, and other embedded materials are securely fastened in place. Contact the IOR at least 24 hours before placing concrete; do not place concrete until inspected by the IOR.

B. Pouring Record: A record shall be kept on the Project site of time and date of placing concrete in each portion of structure. Such record shall be maintained on the Project site until Substantial Completion and shall be available for examination by the Architect and DSA.

3.02 PREPARATION

A. Moisture Barrier: Before installation of screeds and slab reinforcement, install a moisture barrier under slabs on grade. Place membrane in as large sheets as possible, lapped 12 inches at sides and ends, with top lap placed in the direction of the spreading of concrete. Extend membrane and lap at least 4 inches onto adjoining wall surfaces and seal with pressure-sensitive tape.

1. Install moisture barrier on minimum 2-inch bed of sand, unless otherwise indicated, over gravel base as indicated on the Drawings.
2. Patch punctures and tears in moisture barrier.

B. Reglets and Rebates:

1. Form reglets and rebates in concrete to receive flashing, frames and other equipment as detailed and required. Coordinate dimensions and locations required with other related Work.
2. If concrete slabs on grade adjoin a wall or other perpendicular concrete surface, form a reglet in wall to receive and carry horizontal concrete Work. Reglet shall be full thickness of the slab and shall be 3/4 inch wide, unless otherwise indicated. Requirement does not apply to exterior walks, unless specifically indicated.

C. Anchor Slots: Dove-tail anchor slots at concrete walls to receive masonry veneer shall be set vertically in forms, 24 inches maximum on centers measured horizontally. Anchor slots shall be No. 24 gage galvanized sheet steel with removable fiber filler to prevent seepage of cement in slot.

D. Screeds: Install screeds accurately and maintain at required grade or slab elevations after steel reinforcement has been installed, but before starting to place concrete. Install screeds adjacent to walls and in parallel rows not to exceed 8 feet on centers.

3.03 INSTALLATION

A. Conveying and Placing:
1. Concrete shall be placed only under direct observation of the IOR. Do not place concrete outside of regular working hours, unless the IOR has been notified at least 48 hours in advance.
2. Concrete shall be conveyed from mixer to location of final placement by methods, which will prevent separation or loss of materials.
3. Concrete shall be placed as nearly as practicable to its final position to avoid segregation due to re-handling or flowing. No concrete that has partially hydrated or has been contaminated by foreign materials shall be placed, nor shall re-tempered concrete or concrete which has been remixed after initial set be placed.
4. In placing concrete in thin sections, provide openings in forms, elephant trunks, tremies or other recognized devices, to prevent segregation and accumulation of partially hydrated concrete on forms or metal reinforcement above level of concrete being placed. Such devices shall be installed so that concrete will be dropped vertically. Unconfined vertical drop of concrete from end of such devices to final placement surface shall not exceed 6 feet.
5. Concrete shall be placed as a continuous operation until placing of panel or section is completed. Top surfaces of vertically formed lifts shall be level.
6. Concrete shall be thoroughly consolidated during placement, and shall be worked around reinforcement and embedded fixtures with mechanical vibrators.
7. Where conditions make consolidation difficult, or where reinforcement is congested, batches of mortar containing same proportions of cement, sand, and water as provided in the concrete, shall first be deposited in the forms to a depth of at least one inch.

B. Compaction and Screeding:
1. Tamp freshly placed concrete with a heavy tamper until at least 3/8 inch of mortar is brought to surface. Concrete shall then be tamped with a light tamper and screeded with a heavy straightedge until depressions and irregularities are

eliminated, and surface is true to finish grades or elevations. Remove excess water and debris.

2. Where slabs are to receive separate cement finish or mortar setting bed, continued tamping to raise mortar to surface is not performed. Laitance shall be removed by brushing with a stiff brush or by light sandblasting to expose clean top surface of coarse aggregate.

C. Floating and Troweling:
   1. When concrete has hydrated sufficiently, it shall be floated to a compact and smooth surface. After floating, wait until concrete has reached proper consistency before troweling. Top surfaces shall receive at least 2 troweling operations with steel hand trowel. Prior to and during final troweling, apply a fine mist of water frequently with an atomizing type fog sprayer. Omit troweling for slabs to receive a separate cement finish.
   2. For interior finish slabs, final troweling shall provide a hard, impervious, and non-slip surfaces, free from defects and blemishes. Finished surface shall be within a tolerance of 1/8 inch in 10 feet. Avoid burnishing. Do not add cement or sand to absorb excess moisture.
      a. Floor of Walk-In Refrigerator: Finish as specified above, to a smooth finish.
      b. At gymnasium locker room floors shall be given a fine broom finish. After floating, and while the surface is still plastic, provide a fine textured finish by drawing a fine fiber bristle broom uniformly over the surface in one direction only. Floors sloped for drainage should be brushed in the direction of flow.
   3. Exterior Paving and Cement Walks: Finish as specified above, except surface shall be given a non-slip broom finish to match Sample reviewed by the Architect.
   4. Vertical concrete surfaces shall be finished smooth and free from marks or other surface defects.

D. Curing:
   1. Concrete shall be maintained above 50 degrees F., and in a moist condition for 7 days after placing, except that high early strength concrete shall be maintained in a moist condition for 3 days.
   2. Before applying curing paper, interior floor treated with colored hardener shall be given a heavy protective coat of colored wax left unpolished, and then immediately covered with paper. If wax is not applied within two hours after final troweling, concrete shall be sprayed with a fine water mist and maintained continuously moist until wax is applied, unless spraying is not recommended by hardener manufacturer. After other Work such as plastering and painting has been completed, curing paper shall be removed and waxed floors cleaned of protective wax coating.
   3. Forms containing concrete, top of concrete between forms, and exposed concrete surfaces after removal of forms shall be maintained in a thoroughly wet condition for at least 7 consecutive days after placing.
   4. If weather is hot or surface has dried out, spray surface of concrete slabs and paving with fine mist of water, starting not later than 2 hours after final troweling and continuing until sunset. Surface of finish shall be kept continuously wet until curing medium has been installed.

5. Immediately after finishing, roof slabs and monolithic floor finish to receive resilient floor covering shall be uniformly and completely coated with liquid curing compound.
    a. Install compound in a manner and quantity sufficient to produce a uniform continuous thin film of water-impervious membrane. Compound shall be installed in accordance with manufacturer's directions.
    b. Protect adjoining surfaces from damage during installation. If curing compound is not applied immediately, cover finished concrete with wet burlap or curing paper and keep concrete surface wet for a period not to exceed thirty hours following finishing of concrete. At end of that time, burlap or paper shall be removed and curing compound installed as specified above.
6. Immediately after finishing, monolithic floor slabs not scheduled to receive resilient floor covering shall be covered with curing paper. Paper shall be lapped 3 inches at joints and sealed with waterproof sealer. Edges shall be cemented to finish. Repair or replace paper damaged during construction operations.
7. Within 24 hours after finishing, exterior slabs and paving, and interior slabs to receive cement topping or mortar setting beds, shall be covered with sand to a depth of 2 inches and kept thoroughly wet for 7 days.
    a. Instead of sand covering, exterior walks and paving where no other surface treatment is specified, may be cured with clear liquid curing compound immediately installed in accordance with manufacturer's directions.

E. Filling, Leveling and Patching:
1. Concrete slabs exhibiting high or low spots and indicated to receive resilient floor covering or soft floor covering, shall have surfaces repaired. High spots shall be honed, or ground with power-driven machines to required tolerances. Low spots shall be filled with latex underlayment, installed in strict accordance with manufacturer's written recommendations.
2. Holes resulting from form ties or sleeve nuts shall be solidly packed, through exterior walls, by pressure grouting with cement grout, as specified. Grouted holes on exposed surfaces shall be screeded flush and finished to match adjoining surfaces.

F. Cement Base: Cement base shall be of the height, thickness, and shape detailed. Base shall be reinforced with one inch mesh, 18 gage, zinc-coated wire fabric. Base finish mixture shall be one part Portland cement, 2 parts of fine aggregate and one part pea gravel. Colored cement base shall include a chemically inert mineral oxide pigment in the mix.

3.04 FINISHING

A. Soda and Acid Wash: Concrete surfaces to receive plaster, paint or other finish, and which have been formed by oil coated forms, shall be scrubbed with a solution of 1-1/2 pounds of caustic soda to one gallon of water. Surfaces where smooth wood or waste molds have been furnished shall be scrubbed with a solution of 20 percent muriatic acid. Wash with clean water after scrubbing.

B. Sacking: Exposed concrete curbs, walls, and other surfaces shall be sacked by an application of Portland cement grout, floated, and rubbed. Sacking shall not be

performed until patching and filling of holes has been completed. Entire sacking operation for any continuous area shall be started and completed within the same day.

1. Mix one part Portland cement and 1-1/2 parts fine sand with sufficient water to produce a grout having consistency of thick paint. Wet surface of concrete sufficiently to prevent absorption of water from grout. Apply grout uniformly with a brush or spray gun, then immediately float surface with a cork or other suitable float, scouring wall vigorously.
2. While grout is still plastic, finish surface with a sponge-rubber float, removing excess grout. Allow surface to dry thoroughly, then rub vigorously with dry burlap to completely remove dried grout. No visible film or grout shall remain after rubbing with burlap.

C. Sandblasting: Exterior concrete surfaces to receive stucco dash coat finish, where plywood or other smooth forms have been furnished, shall be uniformly sand-blasted with sharp quartz sand under sufficient air pressure to remove dirt, form oil and other foreign materials, and roughen surface to provide a proper bond. Such surfaces shall be thoroughly washed with clean water after sandblasting.

D. Abrasive: Concrete stair treads, landings, ramps and steps on interior and exterior of buildings, and interior exposed concrete floors in shop buildings shall receive an abrasive finish. Abrasive grains in amount of 30 pounds per 100 square feet shall be evenly installed by dust-on method and embedded into surface during first troweling operation. Additional abrasive grains, in amount of 30 pounds per 100 square feet, shall then be evenly installed and embedded into surface during final troweling operation.

E. Floor Hardener: Exposed interior concrete floors throughout shall be treated with floor hardener, as specified. Install hardener after surface of concrete has reached the point where no excess moisture is present, but while it is still plastic. Hardener shall be installed as follows:

1. Colored Hardener: Install at rate of 40 pounds per 100 square feet of surface for initial application.
2. Gray (natural) Hardener: Install at rate of 20 pounds per 100 square feet of surface for initial application.
3. Hardener shall be evenly distributed and thoroughly floated into surface mortar with a wood float. An additional 20 pounds of hardener, colored or gray, specified as above, shall be installed over each 100 square feet, and troweled to an even surface having uniform color and texture.

F. Cement Grout and Dry-Pack Concrete: Cement grout shall be mixed at the Project site and shall be composed of one volume of Portland cement and 2-1/2 volumes of fine aggregate. Materials shall be mixed dry with sufficient water added to make mixture flow under its own weight. When grout is used as a dry pack concrete, add sufficient water to provide a stiff mixture, which can be molded into a sphere.

G. Broom Finish: Exterior stair treads and landings shall be provided with a non-slip broom finish in addition to abrasive finish specified.

H. Abrasive Stair Nosing: Nosing shall be installed according to manufacturers written recommendations.

3.05 EXPANSION AND CONSTRUCTION JOINTS

A. Construction Joints: Details and proposed location of construction joints shall be as indicated on the Drawings, located to least impair strength of structure, in accordance with the following:
   1. Thoroughly clean contact surface by sand blasting entire surface not earlier than 5 days after initial placement.
   2. A mix containing same proportion of sand and cement provided in concrete plus a maximum of 50 percent of coarse aggregate shall be placed to a depth of at least one inch on horizontal joints. Vertical joints shall be wetted and coated with a neat cement grout immediately before placing of new concrete.
   3. Should contact surface become coated with earth, sawdust, or deleterious material of any kind after being cleaned, entire surface shall be re-cleaned before applying mix.

B. Expansion Joints: Provide expansion joints where indicated in walks and exterior slabs. Space approximately 20 feet apart, unless otherwise indicated. Joints shall extend entirely through slab with joint filler in one piece for width of walk or slab. Joint filler shall be 3/8 inch thick, unless otherwise indicated.

C. Tooled Joints: Slabs, walks and paving shall be marked into areas as indicated with markings made with a V-grooving tool. Marks shall be round-edged, free from burrs or obstructions, with clean cut angles and shall be straight and true. Walks, if not indicated, shall be marked off into rectangles of not more than 12 square feet and shall have a center marking where more than 5 feet wide.

3.06 TESTING

A. Molded Cylinder Tests:
   1. Owner Consultant will prepare cylinders. Each cylinder shall be dated, given a number, point in structure from which sample was obtained, mix design number, mix design strength and result of accompanying slump test noted.
   2. Separate tests of molded concrete cylinders obtained at same place and time shall be made at age of 3 days, 7 days, and 28 days. A strength test shall be the average of the compressive strength of 2 cylinders, obtained from the same sample of concrete and tested at 28 days or at test age designated for determination of f'c.
   3. Test cylinders shall be prepared at the Project site and stored in testing laboratory in accordance with ASTM C 31, and tested in accordance with ASTM C 39.

B. Core Test: At request of the Architect, cores of hardened concrete shall be cut from portions of hydrated structures for testing, in accordance with CBC and ASTM C 42.
   1. Provide 4 inch diameter cores at representative places throughout the structure as designated by the Architect.
   2. In general, provide sufficient cores to represent concrete placed with at least one core for each 4,000 square feet of building area, and at least 3 cores total for each Project.
   3. Where cores have been removed, fill voids with drypack, and patch the finish to match the adjacent existing surfaces.

C. Concrete Consistency: Measure consistency according to ASTM C 143. Test twice each day or partial day's run of the mixer.

D. Adjustment of Mix: If the strength of any grade of concrete for any portion of Work, as indicated by molded test cylinders, fall below minimum 28 days compressive strength specified or indicated, adjust mix design for remaining portion of construction so that resulting concrete meets minimum strength requirements.

E. Defective Concrete:

1. Should strength of any grade of concrete, for any portion of Work indicated by tests of molded cylinders and core tests, fall below minimum 28 days strength specified or indicated, concrete will be deemed defective Work and shall be replaced or adequately strengthened in a manner acceptable to the Architect and DSA.
2. Concrete Work that is not formed as indicated, is not true within 1/250 of span, not true to intended alignment, not plumb or level where so intended, not true to intended grades and levels, contains sawdust shavings, wood or embedded debris, or does not fully conform to Contract provisions, shall be deemed to be defective Work and shall be removed and replaced.

F. Concrete for Equipment Pads, Mechanical and Electrical Work: Unless otherwise indicated, strength shall be 3,000 psi concrete. Exposed concrete shall be provided with a hand trowel finish with radius corners and edges. Form and place concrete where necessary as described in Section 30 10 00: Concrete Forms and Accessories, and reinforced as described in Section 03 20 00: Concrete Reinforcement. Calcium chloride shall not be furnished in any concrete mix provided for the installation of underground electrical conduits. For concrete encasement of more than one conduit, furnish 3/4 inch to 1 inch aggregate as specified for concrete mix.

3.07 CLEAN UP

A. Remove rubbish, debris and waste materials and legally dispose of off the Project site.

3.08 PROTECTION

A. Protect the Work of this section until Substantial Completion.

END OF SECTION 03 30 00

SECTION 03 3290
JOINTS IN CONCRETE

PART 1 - GENERAL

1.1 SUMMARY

A. Section Includes:

1. Concrete pavement joints.

B. Related Requirements:

1. Division 01 - General Requirements.

2. Section 03 3740 – Concrete Repair

3. Section 32 1313 – Site Concrete Work

1.2 SUBMITTALS

A. Submittals shall be made in accordance with the General Requirements.

B. The following submittals and specific information shall be provided.

1. Waterstops: Prior to use of the material required under this contract, qualification samples shall be submitted. Such samples shall consist of extruded or molded sections of each size or shape to be used. The material sample shall be representative of the material to be furnished under this contract. The balance of the material to be used under this contract shall not be produced until after the City Engineer has reviewed and approved the qualification samples.

2. Joint Sealant: Prior to ordering the sealant material, the Contractor shall submit to the City Engineer for review and approval, data to show compliance with the requirements of the Contract Documents. Certified test reports from the sealant manufacturer on the actual batch of material being supplied indicating compliance with the above requirements shall be furnished the City Engineer before the sealant is used on the job.

3. Shipping Certification: The Contractor shall provide written certification from the manufacturer as an integral part of the shipping form, to show that all of the material shipped to this project meets or exceeds the physical property requirements of the Contract Documents. Supplier certificates are not acceptable.

4. The Contractor shall submit placement shop drawings showing the location and type of all joints for each structure.

1.3 QUALITY ASSURANCE

A. Comply with the reference standards of the General Requirements

B. Comply with the current provisions of the following Codes and Standards, as applicable:

1. Federal Specifications:

TT-S-0227E(3) Sealing Compound, elastomeric type, Multi-component for Caulking, Sealing, and Glazing Buildings and Other Structures).

2. Commercial Standards:

ASTM C 920 Specification for Elastomeric Joint Sealants.

ASTM D 624 Test Method for Rubber Property -- Tear Resistance.

ASTM D 638 Test Method for Tensile Properties of Plastics.

ASTM D 746 Test Method for Brittleness Temperature of Plastics and Elastomers by Impact.

ASTM D 747 Test Method for Apparent Bending Modulus of Plastics by Means of a Cantilever Beam.

ASTM D 1751 Premolded Joint Filler

ASTM D 1752 Specification for Preformed Sponge Rubber and Cork Expansion Joint Fillers for Concrete Paving and Structural Construction.

ASTM D 2240 Test Method for Rubber Property -- Durometer Hardness.

C. Waterstop manufacturer shall demonstrate five years (minimum) continuous, successful experience in production of waterstops.

D. Waterstop Inspection: It is required that all waterstop field joints shall be subject to inspection, and no such work shall be scheduled or started without having made prior arrangements with the INSPECTOR to provide for the required inspections. Not less than 24 hours notice shall be provided to the INSPECTOR for scheduling such inspections.

E. All field joints in waterstops shall be free of misalignment, bubbles, inadequate bond, porosity, cracks, offsets, and other defects which would reduce the potential resistance of the material to water pressure at any point. All defective joints shall be replaced with material which shall pass said inspection, and all faulty material shall be removed from the site and disposed of by the Contractor at its own expense.

F. The following waterstop defects represent a partial list of defects which shall be grounds for rejection:

1. Offsets at joints greater than 1/16-inch or 15 percent of material thickness, at any point, whichever is less.

2. Exterior crack at joint, due to incomplete bond, which is deeper than 1/16-inch or 15 percent of material thickness, at any point, whichever is less.

3. Any combination of offset or exterior crack which will result in a net reduction in the cross section of the waterstop in excess of 1/16-inch or 15 percent of material thickness at any point, whichever is less.

4. Misalignment of joint which result in misalignment of the waterstop in excess of 1/2-inch in 10 feet.

5. Porosity in the welded joint as evidenced by visual inspection.

6. Bubbles or inadequate bonding.

G. Waterstop Samples: Prior to use of the waterstop material in the field, a sample of a fabricated metered cross and a tee constructed of each size or shape of material to be used shall be submitted to the City Engineer for approval. These samples shall be fabricated so that the material and workmanship represent in all respects the fittings to be furnished under this contract. Field samples of fabricated fittings (crosses, tees, etc.) will be selected at random by the Inspector for testing. When tested, they shall have a tensile strength across the joints equal to at least 600 psi.

H. Construction Joint Sealant: The Contractor shall prepare adhesion and cohesion test specimens as specified herein, at intervals of 5 working days while sealants are being installed.

I. The sealant material shall show no signs of adhesive or cohesive failure when tested in accordance with the following procedure in laboratory and field tests:

1. Sealant specimen shall be prepared between 2 concrete blocks (1 inch by 2-inch by 3-inch). Spacing between the blocks shall be 1/2-inch. Coated spacers (2-inch by 1-1/2-inch by 1/2-inch) shall be used to insure sealant cross-sections of 1/2-inch by 2 inches with a width of 1/2-inch.

2. Sealant shall be cast and cured according to manufacturer's recommendations except that curing period shall not exceed 24 hours.

3. Following curing period, the gap between blocks shall be widened to one inch. Spacers shall be used to maintain this gap for 24 hours prior to inspection for failure.

J. Store waterstops under tarps to protect from oil, dirt, and sunlight

1.4 GUARANTEE

A. The Contractor shall provide a 5-year written guarantee of the entire sealant installation against faulty and/or incompatible materials and workmanship, together with a statement that it agrees to repair or replace, to the satisfaction of the City, at no additional cost to the CITY, any such defective areas which become evident within said 5-year guarantee period.

1.5 DEFFINITIONS

A. Construction Joints: When fresh concrete is placed against a hardened concrete surface, the joint between the two pours is called a construction joint. Unless otherwise specified, all joints in water bearing members shall be provided with a waterstop and sealant groove of the shape specified and as shown on the plans.

B. Contraction Joints: Contraction joints are similar to construction joints except that the fresh concrete shall not bond to the hardened surface of the first pour, which shall be coated with a bond breaker. The slab reinforcement shall be stopped 4-1/2 inches from the joint, unless noted otherwise; which is provided with a sleeve-type dowel, to allow shrinkage of the concrete of the second pour. Waterstop and sealant groove shall also be provided.

C. Expansion Joints: To allow the concrete to expand freely, a space is provided between the two pours, the joint shall be formed as shown on the plans. This space is obtained by placing a filler joint material against the first pour, which acts as a form for the second pour. Unless otherwise specified, all expansion joints in water bearing members shall be provided with an approved type waterstop.

Premolded expansion joint material shall be installed with the edge at the indicated distance below or back from finished concrete surface, and shall have a slightly tapered, dressed, and oiled wood strip secured to or placed at the edge thereof during concrete placement, which shall later be removed to form space for sealing material. The space so formed shall be filled with a joint sealant material as specified in the Paragraph in Part 2 entitled "Joint Sealant." In order to keep the two elements in line the joint shall be provided with a sleeve-type dowel as shown.

D. Control Joints (Weakened Plane): The function of the control joint is to provide a weaker plane in the concrete, where shrinkage cracks will probably occur. A groove, of the shape and dimensions as shown on the plans, is formed or saw-cut in the concrete and shall be filled with a joint sealant material as specified in the Paragraph in Part 2 entitled "Joint Sealant."

PART 2 - PRODUCTS

2.1 PVC WATERSTOPS

A. General: Waterstops shall be extruded from an elastomeric polyvinyl chloride compound containing the plasticizers, resins, stabilizers, and other materials necessary to meet the requirements of these Specifications. No reclaimed or scrap material shall be used. The CONTRACTOR shall obtain from the waterstop manufacturer and shall furnish to the ENGINEER for review, current test reports and a written certification of the manufacturer that the material to be shipped to the job meets the physical requirements as outlined in the U.S. Army Corps of Engineers Specification CRD-C572 and those listed herein.

B. Flatstrip and Center-Bulb Waterstops: Flatstrip and center-bulb waterstops shall be as detailed and as manufactured by: [Kirkhill Rubber Co., Brea, California; Greenstreak, St. Louis, MO, Water Seals, Inc., Chicago, Illinois; Progress Unlimited, Inc., New York, New York]; or an approved equal; provided, that at no place shall the thickness of flat strip waterstops, including the center bulb type, be less than 3/8-inch.

C. Multi-Rib Waterstops: Multi-rib waterstops, where required, shall be as detailed and as manufactured by [Water Seals, Inc., Chicago, Illinois; Progress Unlimited, Inc., New York, New York; Greenstreak, St. Louis, MO], or an approved equal. Prefabricated joint fittings shall be used at all intersections of the ribbed-type waterstops.

D. Other Types of Waterstops: When other types of waterstops, not listed above are required and shown, they shall be subjected to the same requirements as those listed herein.

E. Waterstop Testing Requirements: When tested in accordance with the specified test standards, the waterstop material shall meet or exceed the following requirements:

Physical Property, Sheet Material	Value	ASTM Std.
Tensile Strength-min (psi)	1750	D 638, Type IV
Ultimate Elongation-min (percent)	350	D 638, Type IV
Low Temp Brittleness-max (degrees F)	-35	D 746
Stiffness in Flexure-min (psi)	400	D 7

Accelerated Extraction (CRD-C572)		
Tensile Strength-min (psi)	1500	D 638, Type IV
Ultimate Elongation-min (percent)	300	D 638, Type IV
Effect of Alkalies (CRD-C572)		
Change in Weight (percent)	+0.25/-0.10	------
Change in Durometer, Shore A	+5	D 2240
Finish Waterstop		
Tensile Strength-min (psi)	1400	D 638, Type IV
Ultimate Elongation-min (percent)	280	D 638, Type IV

F. Accessories

1. Provide factory made waterstop fabrications for all changes of direction, intersections, and transitions leaving only straight butt joint splices for the field.

2. Provide hog rings or grommets spaced at 12 inches on center along length of waterstop.

3. Provide Teflon coated thermostatically controlled waterstop splicing irons for field butt splices.B.

2.2 JOINT SEALENT

A. Joint sealant shall be polyurethane polymer designed for bonding to concrete which is continuously submerged in water.

B. Joint sealant material shall meet the following requirements:

Work Life	45 - 90 minutes
Time to Reach 20 Shore "A" Hardness (at 77 degrees F, 200 gr quantity)	24 hours, maximum
Ultimate Hardness	30 - 40 Shore "A"
Tensile Strength	250 psi, minimum
Ultimate Elongation	400 percent, minimum
Tear Resistance (Die C ASTM D 624)	75 pounds per inch of thickness, minimum
Color	Light Gray

C. All polyurethane sealants for waterstop joints in concrete shall conform to the following requirements:

1. Sealant shall be 2-part polyurethane with the physical properties of the cured sealant conforming to or exceeding the requirements of ASTM C 920 or Federal Specification TT-S-00227 E(3) for 2-part material, as applicable.

2. For vertical joints and overhead horizontal joints, only "non-sag" compounds shall be used; all such compounds shall conform to the requirements of ASTM C 920 Class B, or Federal Specification TT-S-0027 E(3), Type II.

3. For plane horizontal joints, the self-leveling compounds which meet the requirements of ASTM C 920 Class A, or Federal Specification TT-S-0027 E(3), Type I shall be used. For joints subject to either pedestrian or vehicular traffic, a compound providing non-tracking characteristics, and having a Shore "A" hardness range of 25 to 35, shall be used.

4. Primer materials, if recommended by the sealant manufacturer, shall conform to the printed recommendations of the sealant manufacturer.

5. All sealants, wherever shown, or required hereunder shall be [Rubbercalk 2101-I or 270 as manufactured by Products Research Company; GS 102 or GS 1102 as manufactured by General Sealants Corp]; or an approved equal. For sanitary structures mastic/sealant material shall be [Ram Nek Sealant by Henry Co.; Sika Flex 1A, Sikadur 51 NS by Sika Corp].

6. Sealants for non-waterstop joints in concrete shall conform to the requirements of Section 07 9000, "Joint Sealants". Mastic joint sealer shall be a material that does not contain evaporating solvents; that will tenaciously adhere to concrete surfaces; that will remain permanently resilient and pliable; that will not be affected by continuous presence of water and will not in any way contaminate potable water; and that will effectively seal the joints against moisture infiltration even when the joints are subject to movement due to expansion and contraction. The sealer shall be composed of special asphalts or similar materials blended with lubricating and plasticizing agents to form a tough, durable mastic substance containing no volatile oils or lubricants and shall be capable of meeting the test requirements set forth hereinafter, if testing is required by the City Engineer.

2.3 PREFORMED JOINT FILLER

A. Preformed joint filler material shall be of the preformed non-extruding type joint filler constructed of cellular neoprene sponge rubber or polyurethane of firm texture. Bituminous fiber type will not be permitted. All non-extruding and resilient-type preformed expansion joint fillers shall conform to the requirements and tests set forth in ASTM D 1752 for Type I, except as otherwise specified herein.

B. Unless otherwise noted, preformed joint filler shall be a non-extruding, resilient, bituminous type conforming to the requirements of ASTM D 1751.

2.4 BACKING ROD

A. Backing rod shall be an extruded closed-cell, polyethylene foam rod. The material shall be compatible with the joint sealant material used and shall have a tensile strength of not less than 40 psi and a compression deflection of approximately 25 percent at 8 psi. The rod shall be 1/8-inch larger in diameter than the joint width except that a one-inch diameter rod shall be used for a 3/4-inch wide joint.

2.5 BOND BREAKER

A. Bond breaker shall be [Super Bond Breaker as manufactured by Burke Company, San Mateo, California; Hunt Process 225-TU as manufactured by Hunt Process Co., Santa Fe Springs, California; Select Cure CRB as manufactured by Select Products Co., Upland, California]; or an approved equal. It shall contain a fugitive dye so that areas of application will be readily distinguishable

PART 3 – EXECUTION

3.1 GENERAL

A. Unless otherwise shown, waterstops of the type specified herein shall be embedded in the concrete across joints as shown. All waterstops shall be fully continuous for the extent of the joint. Splices

necessary to provide such continuity shall be accomplished in conformance to printed instructions of manufacturer of the waterstops. The Contractor shall take suitable precautions and means to support and protect the waterstops during the progress of the work and shall repair or replace at its own expense any waterstops damaged during the progress of the work. All waterstops shall be stored so as to permit free circulation of air around the waterstop material.

B. When any waterstop is installed in the concrete on one side of a joint, while the other half or portion of the waterstop remains exposed to the atmosphere for more than 2 days, suitable precautions shall be taken to shade and protect the exposed waterstop from direct rays of the sun during the entire exposure and until the exposed portion of the waterstop is embedded in concrete.

3.2 SPLICES IN WATERSTOPS

A. Splices in waterstops shall be performed by heat sealing the adjacent waterstop sections in accordance with the manufacturer's printed recommendations and the following requirements:.

1. The material not be damaged by heat sealing.
2. The splices have a tensile strength of not less than 60 percent of the unspliced materials tensile strength.
3. The continuity of the waterstop ribs and of its tubular center axis be maintained.

B. Butt joints of the ends of two identical waterstop sections may be made while the material is in the forms.

C. All joints with waterstops involving more than 2 ends to be jointed together, and all joints which involve an angle cut, alignment change, or the joining of 2 dissimilar waterstop sections shall be prefabricated by the Contractor prior to placement in the forms, allowing not less than 24-inch long strips of waterstop material beyond the joint. Upon being inspected and approved, such prefabricated waterstop joint assemblies shall be installed in the forms and the ends of the 24-inch strips shall be butt welded to the straight run portions of waterstop in place in the forms.

3.2 JOINT CONSTRUCTION

A. Setting Waterstops:

1. In order to eliminate faulty installation that may result in joint leakage, particular care shall be taken of the correct positioning of the waterstops during installation. Adequate provisions must be made to support the waterstops during the progress of the WORK and to insure the proper embedment in the concrete. The symmetrical halves of the waterstops shall be equally divided between the concrete pours at the joints. The center axis of the waterstops shall be coincident with the joint openings. Maximum density and imperviousness of the concrete shall be insured by thoroughly working it in the vicinity of all joints

2. In placing flat-strip waterstops in the forms, means shall be provided to prevent them from being folded over by the concrete as it is placed. Unless otherwise shown, all waterstops shall be held in place with light wire ties on 12-inch centers which shall be passed through the edge of the waterstop and tied to the curtain of reinforcing steel. Horizontal waterstops, with their flat face in a vertical plane, shall be held in place with continuous supports to which the top edge of the waterstop shall be tacked. In placing concrete around horizontal waterstops, with their flat face in a horizontal plane, concrete shall be worked under the waterstops by hand so as to avoid the formation of air and rock pockets.

3. Adequate means shall be provided for anchoring the waterstop in concrete. Waterstops shall be positioned so that they are equally embedded in the concrete on each side of the joint.

B. Joint Location:

1. Construction joints, and other types of joints, shall be provided where shown. When not shown, construction joints shall be provided at 10 foot maximum spacing for all concrete construction, subject to the approval of the City Engineer, unless noted otherwise. The location of all joints, of any type, shall be submitted for acceptance by the City Engineer.

C. Joint Preparation:

1. Special care shall be used in preparing concrete surfaces at joints where bonding between two sections of concrete is required. Unless otherwise shown, such bonding will be required at all horizontal joints in walls. Surfaces shall be prepared in accordance with the requirements of Section [03300] [03310], "Cast-in-Place Concrete." Except on horizontal wall construction joints, wall to slab joints or where otherwise shown or specified, at all joints where waterstops are required, the joint face of the first pour shall be coated with a bond breaker as specified herein.

D. Construction Joint Sealant:

1. Construction joints in water-bearing floor slabs, and elsewhere as shown, shall be provided with tapered grooves which will be filled with construction joint sealant. The material used for forming the tapered grooves shall be left in the grooves until just before the grooves are cleaned and filled with joint sealant. After removing the forms from the grooves, all laitance and fins shall be removed, and the grooves shall be sand-blasted. The grooves shall be allowed to become thoroughly dry, after which they shall be blown out; immediately thereafter, they shall be primed and filled with the construction joint sealant. The primer used shall be supplied by the same manufacturer supplying the sealant. No sealant will be permitted to be used without a primer. Care shall be used to completely fill the sealant grooves. Areas designated to receive a sealant filler shall be thoroughly cleaned, as outlined for the tapered grooves, prior to application of the sealant.

2. Sealant application shall be in accordance with the manufacturer's printed instructions. The surfaces of the groove for the sealant shall not be coated. Concrete next to waterstops shall be placed in accordance with the requirements of Section 03 30 00 Cast-in-Place Concrete.

3. The primer and sealant shall be placed strictly in accordance with the printed recommendations of the manufacturer, taking special care to properly mix the sealant prior to application. All sealant shall cure at least 7 days before the structure is filled with water.

4. All sealant shall be installed by a competent waterproofing specialty contractor who has a successful record of performance in similar installations. Before work is commenced, the crew doing the work shall be instructed as to the proper method of application by a representative of the sealant manufacturer.

5. Thorough, uniform mixing of 2-part, catalyst-cured materials is essential; special care shall be taken to properly mix the sealer before its application. Before any sealer is placed, the Contractor shall arrange to have the crew doing the work carefully instructed as to the proper method of mixing and application by a representative of the sealant manufacturer.

6. Any joint sealant which after the manufacturer's recommended curing time for the job conditions of the work hereunder, fails to fully and properly cure shall be completely removed; the groove shall be thoroughly sandblasted to remove all traces of the uncured or partially cured sealant and primer, and shall be re-sealed with the specified joint sealant. All costs of such removal, joint treatment, re-sealing, and appurtenant work shall be at the expense of the Contractor.

END OF SECTION

SECTION 03 35 10
CONCRETE FLATWORK FINISHING AND CURING

PART 1 - GENERAL

1.01 SUMMARY

A. Section Includes:
   1. Finishing flatwork after strike off, including leveling, floating, troweling; and other concrete finishing methods, including finishing tolerance classifications.
   2. Evaporation reducers.
   3. Wet covering curing materials.
   4. Curing compounds.
   5. Preventative (day-of-pour) MVECS.
   6. Floor protection materials.
   7. Supplementary components and accessories normally furnished or necessary for a complete installation, whether or not such items are indicated on the Drawings or included in the Specifications.

B. Related Requirements:
   1. Section 03 54 16 for underlayment; and for definition of the term “underlayment”.
   2. Section 09 05 16 for corrective (remedial) MVECS; and for definitions of the terms “substrate”, “penetrant”, “overlay”, “covering”, and “overburden”.

1.02 RELATED DOCUMENTS

A. This specification
   1. supplements the requirements of Section 03 30 00; and
   2. supersedes any leveling, floating, troweling, and other concrete finishing requirements contained in Section 03 30 00, including finishing tolerances.

1.03 SECTION REQUIREMENTS

A. Manufacturer Warranty: Furnish to the Owner a written manufacturer warranty for products, components, and accessories against all patent and latent defects, and incipient and catastrophic failure for 5 years.

1.04 ALTERNATES

A. With input from the preventative (day-of-pour) MVECS manufacturer, preventative MVECS specified in this specification section may be considered for certain concrete curing applications in lieu of curing compounds; and possibly in lieu of corrective (remedial) MVECS products specified in Section 09 05 16.

1.05 REFERENCES

A. Abbreviations and Acronyms:
   1. ACI: American Concrete Institute.
   2. F(f): Floor Flatness.

3. F(l): Floor Levelness.
4. HVFAC: High-Volume Fly Ash Concrete.
5. MLV: Minimum Local Value.
6. MVECS: Moisture Vapor Emission Control System.
7. MVER: Moisture Vapor Emission Rate.
8. pH: Potential of Hydrogen (a measure of acidity or alkalinity).
9. RH: Relative Humidity.
10. SOV: Specified Overall Value.
11. VDR: Vapor Diffusion Retarder.

B. Definitions:
1. Manufacturer: Means the evaporation reducer, surface retarder, slip-resistive aggregate, curing material, curing compound, MVECS, or accessory manufacturer, as the context admits, unless otherwise indicated.
2. Flatwork: Means all concrete work along a horizontal plane, including indoor floors and decks, concrete stairs, and outdoor patios, sidewalks, and driveways. Flatwork excludes vertical structures like walls or bridges.
3. General Concrete Terms:

    a. Freshly-Mixed Concrete: Means a homogenous mixture of blended hydraulic cement, aggregates, and water, with or without admixtures, fibers, or other cementitious materials.

    b. Newly-Placed Concrete: Means freshly-mixed concrete that is deposited (placed), distributed (spread), screeded (struck-off), and consolidated (tamped) in the place where it hardens, but not yet floated, troweled, or otherwise finished. (aged up to approximately one hour after placement)

    c. Newly-Finished Concrete: Means newly-placed concrete, the surface of which has deliberate floating, troweling, and other finishing actions performed during a period promptly after strike off and after bleed water, glaze, or sheen has disappeared and the concrete is hard enough to resist surface damage, but before initial set; and whose surface is damp but not wet. (aged approximately one to 4 hours)

    d. Cured Concrete: Means newly-finished concrete, the surface of which has had deliberate actions taken between final finishing and the termination of curing to reduce loss of water from the flatwork surface; and control concrete temperature.

        1) Initially-Cured Concrete (Beginning Curing): Means newly-finished concrete before initial set when bleed water is evaporating too rapidly to keep the surface wet. (aged approximately one to 4 hours)

        2) Newly-Cured Concrete (Intermediate Curing): Means newly-finished concrete during a period following initial set, but before final set. (aged approximately 4 to 8 hours)

        3) Recently-Cured Concrete (Final Curing): Means newly-finished concrete during a period following final set. (aged approximately 8 hours to 14 days)

    e. Hardened Concrete: Means recently-cured concrete that has sufficient strength to serve its purpose or resist breaking under stipulated loading (approximately 7 to 28 days or older), and that has not been exposed to weathering or contaminates.

    f. Newly-Aged Concrete: Means hardened concrete aged more than 28 days whose surfaces have been exposed to weathering, including abrasion, liquid penetration, freeze/thaw cycles, and salts or other contaminates.

g. Existing Concrete: Means concrete that was placed, finished, cured, hardened, and weathered prior to the start of the project that is indicated as remaining, and which may also require cleaning, resurfacing, rehabilitation, or strengthening.

4. Concrete Finishing Terms:

   a. Smooth: Means having a continuous even surface free from irregularities, roughness, projections, bumps, points or ridges.

   b. Surface Defect: Means surface voids, aggregate transparency, color variation, spalling, cracking, offsets, and similar cavities or irregularities.

   c. Trowel Pattern: Means a flatwork surface feature produced by troweling that is seen but cannot be felt.

   d. Trowel Mark: Means a flatwork surface defect produced by troweling that is both seen and felt.

5. Concrete Curing Terms:

   a. Water Curing: Means curing flatwork by flooding with water (ponding or immersion), continuously spraying with water, or fog mist-spraying to replace evaporating water. Adding water to the surface does not mean adding water that is worked into the concrete mix, which may increase the surface concrete water-cement ratio and weaken it.

   b. Wet Covering Curing: Means curing flatwork with coverings, including earth, sand, sawdust, straw, hay, canvas, hessian or jute burlap, or natural cellulose fabric, which are kept continuously wet to replace water evaporating from flatwork.

   c. Sheet Curing: Means curing flatwork with water retaining coverings, including waterproof paper or plastic film, which prevent water from evaporating from flatwork.

   d. Curing Compounds: Means curing flatwork with liquid membrane-forming resinous materials that prevent water from evaporating from flatwork.

1.06 ADMINISTRATIVE REQUIREMENTS

A. General Coordination:

1. Though wet covering curing methods are generally recommended and preferred for curing concrete (to minimize the risk of potential flatwork failures), the Contractor controls the means and methods for flatwork finishing and curing.
2. Contractor shall perform or arrange and pay costs for all remedial work necessary to correct or improve all deficient conditions and all failures directly or indirectly caused by concrete curing means and methods, without limitation, including delays, schedule disruptions, corrections, repairs, and replacement.
3. Proposed substitution requests and submittals that change the generic chemistry of specified concrete finishing and curing materials are prohibited and returned to the Contractor without review or responsive action, except to record non-conformance with this requirement.
4. Specified coverage rates are minimum. If manufacturer’s recommended coverage rates differ from specified rates, then

   a. consult the manufacturer’s representative and obtain manufacturer-recommended rates printed on manufacturer’s letterhead;

   b. assume the manufacturer-recommended coverage rates govern; and

c. promptly submit an RFI to the Architect for resolution; include manufacturer-recommended coverage rates with the RFI.

B. Concrete Mix Design Coordination: Coordinate concrete finishing methods and curing materials with factors of the approved concrete mix design that affect concrete bleeding, including the presence of water-reducing admixtures, air-entraining agents, and fly ash, especially HVFAC

C. VDR Coordination:
1. Coordinate finishing methods and curing materials with the selected below-grade VDRs, and with the location of the VDR within each flatwork assembly.
2. Do not double steel trowel interior flatwork installed over VDRs.
3. When curing compounds are selected by the Contractor for use in curing concrete, with the assistance of both the VDR and curing compound manufacturers, coordinate the selection of the correct curing compounds to match selected VDRs.

D. Concrete Finishing Coordination:
1. Coordinate finishing with forecast and actual weather conditions measured at the project site, including factors that affect surface setting such as high wind velocity, low RH, rising air temperature, and exposure to direct sunlight. Wherever practicable, make arrangements to block wind and shade newly-placed concrete from direct sunlight.
2. Coordinate concrete finishing with penetrant, overlay, and covering material preparation, application, and installation requirements indicated in other specification sections. Finish concrete in conformance with tolerances and surface finishes required, recommended, or accepted by all penetrant, overlay, and covering material suppliers and manufacturers.
3. Without limitation, either perform or arrange and pay costs for performing all remedial work necessary to correct or remove, dispose of, and replace defective flatwork, the surface finish and tolerances of which do not conform to the penetrant, overlay, and covering manufacturers' surface finish and tolerance requirements.

E. Concrete Curing Coordination:
1. Coordinate flatwork curing to ensure selected curing materials and methods result in flatwork that conforms to the penetrant, overlay, and covering manufacturers' MVER, pH, RH, and warranty requirements.
2. Coordinate finishing with both forecast and actual weather conditions measured at the project site, including factors that affect surface setting such as high wind velocity, low RH, rising air temperature, and exposure to direct sunlight. Wherever practicable, make arrangements to block wind and to shade newly-placed concrete from direct sunlight.
3. If liquid membrane-forming curing compounds are selected for use in curing concrete flatwork, then with assistance from both the VDR. curing compound, and finish flooring manufacturers, coordinate selection of the correct curing compounds with selected VDR and finish flooring materials and flooring installation materials based on current product formulations.

    a. Verify chemical and adhesive compatibility of selected concrete curing compounds and installed MVECS with selected finish flooring materials and flooring installation materials, including all primers, adhesives, and sealants, based on current product formulations.

    b. Contractor assumes responsibility for all subsequent flatwork conditions, floor finish issues, and substrate failures brought about or attributable to curing compound use, including MVER failure.
4. Perform or arrange and pay costs for performing all remedial work necessary to correct and improve

    a. defective flatwork, including those areas that exceed the MVER, pH, and RH limits required, recommended, or accepted by the penetrant, overlay, and covering manufacturers; and

b. penetrant, overlay, and covering failures resulting from selected concrete curing methods; and coordination of, or failure to coordinate, the chemical and adhesive compatibility of selected curing compounds with all subsequent penetrants, overlays, and covering materials, including primers, adhesives, and sealants, and other installation materials.

F. Preinstallation Meeting:

1. Hold a meeting after submittal approval and at least 10 business days before beginning installation.

   a. VDR manufacturer's representative and installer must attend meeting.

   b. Concrete finishers and the evaporation reducer, curing compound, and MVECS manufacturer's representatives and MVECS installers must attend the meeting.

   c. Tiling, flooring, and concrete sealer manufacturers' representatives and installers must attend the meeting.

2. During the meeting, review the Contract Documents, submittals, project conditions, and installation sequence and methods, including special details and conditions that might affect installation.

   a. Review, discuss, and complete the National Ready Mixed Concrete Association and American Society of Concrete Contractors publication NRMC/ASCC, "*Checklist for the Concrete Pre-Construction Conference*" during the course of the pre-installation meeting. (available from www.nrcma.org or www.ascconline.org)

   b. Discuss the use (or not) of maturity testing for this project, including development of the maturity calibration curve and the equipment requirements and sensor placement for measuring in-place concrete maturity.

3. Identify and discuss adverse or unfavorable conditions detrimental to protecting stored materials or to installation; or to the quality, durability, appearance, or performance of installed flatwork. Resolve each condition.
4. Finalize construction schedule.
5. Record significant discussions and distribute meeting minutes. Do not begin installation until disagreements are successfully resolved to the satisfaction of all parties.

G. Sequencing:

1. When drilling for RH probes specified in Section 09 05 16 is inadvisable (such as when floor heating elements, water tubing, or other items are installed), provide wet concrete RH meter accessories for installation prior to placing concrete.
2. Begin concrete finishing operations promptly after strike off, though refrain from troweling until after bleed water, glaze, or sheen has disappeared. (if troweling is begun while bleed water is still visible, surface defects are likely, and delamination is possible)
3. Both wet coverings saturated with water and sheet curing materials may be used only after the concrete has hardened enough to prevent surface damage, including both marks and patterns. Depending upon environmental conditions at the project site, initial curing may be necessary when utilizing wet covering and sheet curing.

H. Scheduling:

1. Saw Cutting: Newly-cured concrete contraction joints must be cut during a period within the first one or 2 hours of finishing, or as soon as the concrete has hardened sufficiently to prevent aggregates from being dislodged by the saw blade, and before final set. (aged approximately 4 to 8 hours)

2. Minimum Concrete Curing Period: Allow sufficient time in the construction schedule to permit concrete flatwork to cure undisturbed for at least the following time periods, at ambient temperatures above 40 deg. F.

    a. ASTM C 150 Type I Cement (used when the special properties specified for any other types are not required): At least 7 consecutive days.

    b. ASTM C 150 Type II Cement (general use; used when moderate sulfate resistance or moderate heat of hydration is required): At least 10 consecutive days.

    c. ASTM C 150 Type III Cement (high early-strength): At least 3 consecutive days.

    d. ASTM C 150 Type IV (low heat of hydration) or Type V (high sulfate resistance) Cement: At least 14 consecutive days.

1.07 SUBMITTALS

A. Action Submittals: Submit the following for responsive action (formal review and approval).
   1. Product Data: Submit manufacturer's product data, specifications, and all other information necessary to show conformance to the Contract Documents, excluding material safety data sheets (MSDSs), which are returned to the Contractor without review or responsive action.

B. Informational Submittals: Submit the following for information (informal review: responsive action not expected or required, except to record non-conformance with submittal requirements).
   1. Manufacturer's Instructions: Submit manufacturer-prepared published instructions for proper installation of furnished concrete sealers.

      a. If manufacturer's instructions are unavailable or do not apply to specific project conditions, then consult the manufacturer's representative and obtain project-specific supplemental instructions printed on manufacturer's letterhead.

      b. Promptly distribute supplemental instructions to the Architect, who may have comments that lead to contract modifications or minor changes in the work.
   2. Qualification Statements: Submit written descriptions confirming experience specified in QUALITY ASSURANCE article below.

1.08 QUALITY ASSURANCE

A. Regulatory Requirements:
   1. Portland cement concrete paving must be stable, firm, and slip resistant and must conform to California Building Code Sections 11B-302 and 11B-403.

B. Qualifications:
   1. Manufacturer: Company or individuals must have at least 10 years' experience manufacturing concrete sealers installed on at least 200 previous projects similar to this project in size, material, design, and complexity.
   2. Concrete Finishers: Company or individuals must have at least 5 years' experience finishing and curing concrete for at least 30 previous projects similar to this project in size, material, design, and complexity. Individuals performing flatwork finishing and curing must be ACI-certified Flatwork Technicians and Finishers and current in their certification.
   3. Supervisors: Individuals must have at least 7 years' experience finishing and curing concrete for at least 30 previous projects similar to this project in size, material, design, and complexity, including at least 2 years' supervisory experience directing and leading concrete finishers.

Supervisors must be ACI-certified Flatwork Technicians and Finishers and current in their certification.

1.09 HANDLING

A. Receiving: Inspect all deliveries for deteriorated, damaged, and defective items.
   1. Reject items that are not packaged in a manner that prevents damage; or that exhibit deterioration or damage or have damaged or open packaging or containers.
   2. Reject items that are not transported, delivered, or protected in conformance with manufacturer-recommended transport, delivery, and receiving requirements.
   3. Unload and store only inspected and accepted items.

B. Storage: Store unloaded items indoors as shipped, upright in their original packaging or containers, within dry, well-ventilated, broom-cleaned and enclosed storage areas.
   1. Furnish adequate dunnage and bracing during storage.
   2. Prevent stored items from contacting the floor and from deterioration and damage.
   3. Do not leave items uncovered where they might be exposed to weather or become wet; or exposed to heat or sudden changes in temperature or relative humidity; or other sources of deterioration and damage, including dust and other airborne contaminants.

C. Handling: Handle items in conformance with manufacturer’s instructions and other requirements and recommendations, and in a manner that that prevents damage.
   1. Avoid damage to packaging and containers, and contamination of contents.
   2. Rotate inventory; do not use items the shelf life of which is expired.

D. Damaged Item Replacement: Promptly remove and replace deteriorated, damaged, or defective [coating]s with undamaged new [coating]s that do not exhibit deterioration, damage, or defects.

E. Packaging Waste Management: Do not burn or bury construction waste at the project site. Remove and legally dispose of all construction waste away from the project site.

1.10 PROJECT CONDITIONS

A. Ambient Conditions: Install evaporation reducers and curing compounds only when ambient temperature, RH, and other environmental conditions fall within ranges required, recommended, or accepted by the manufacturer.
   1. Do not install evaporation reducers and curing compounds during rain or snow, fog or mist; or when rain or snow is predicted within 24 hours of installation.
   2. Proceed only when there is no threat of impending precipitation, and both current and forecasted weather conditions conform to those required, recommended, or accepted by the manufacturer.

1.11 WARRANTY

A. Manufacturer Warranty: Furnish to the Owner a written manufacturer warranty for products, components, and accessories against all patent and latent defects, and incipient and catastrophic failure for 5 years.

PART 2 - PRODUCTS

2.01 EVAPORATION REDUCERS (EVAPORATION RETARDANTS)

A. Description: VOC-compliant water-based polymer liquid that forms a thin continuous film when applied to fresh concrete, which controls the flatwork surface conditions until finishing operations cause the thin film to completely dissipate.
   1. Evaporation reducers are not curing compounds. Concrete treated with evaporation reducers must be cured.
   2. Evaporation reducers are not surface retarders.

B. Applications: Used on surfaces of newly-placed concrete to temporarily reduce rapid moisture loss from flatwork due to any of the following conditions and applications.
   1. High temperature.
   2. Low humidity.
   3. High wind.
   4. Direct sunlight.
   5. Indoor applications heated in winter.
   6. Low water-cement ratio concrete applications.
   7. Concrete mixes indicated as containing either super plasticizers or silica fume.

C. Restrictions: Do not apply evaporation reducers during final troweling operations. (slab discoloration may occur)

D. Products: Provide one of the following, or equal.
   1. “Confilm” manufactured by BASF Building Systems.
   2. “AquaFilm J74RTU” manufactured by Dayton Superior.
   3. “EUCOBAR” manufactured by The Euclid Chemical Co.
   4. “E-CON” manufactured by L&M Construction Chemicals, Inc.

2.02 WET COVERING CURING MATERIALS

A. Description: Inorganic fabric curing materials designed to be hydrated and to inhibit moisture loss during the curing process of concrete.

B. Application: May be used for curing of concrete flatwork surfaces where appearance of the slab surface is of primary visual importance; and for other concrete flatwork surfaces indicated as exposed-in-service (i.e., exposed sealed or polished concrete).
   1. Concrete must not be stained by either clean or soiled covering materials.
   2. Concrete must not be cross-contaminated through re-use.

C. Wet Covering Curing Materials: When the permitted use of wet covering curing materials is selected to cure concrete flatwork, provide one of the following, or equal.
   1. Water: As specified above for water curing.
   2. Single Use (Disposable) Wet Curing Blankets:

      a. Description: Single-use curing blankets conforming to AASHTO M 171 and ASTM C 171, consisting of a natural color cellulose fiber layer with at least a 3 mil thick impervious, reflective coating applied to one side; perforated for flatwork, non-perforated for vertical applications.

b. Products: “UltraCure DOT” heavy-duty wet curing blanket manufactured by McTech Group, Inc., or equal.

2.03 CURING COMPOUNDS

A. Description: Liquids containing film-forming polymers used to seal the surface of newly-finished concrete and prevent rapid moisture loss.

B. Application: When the permitted use of curing compounds is selected to cure flatwork, temporary (chemically dissipating) curing compounds are recommended and preferred.

C. Restrictions: Liquid membrane-forming curing compounds are not recommended where moisture-sensitive finish flooring is installed. Concrete curing compounds may not be used to cure flatwork indicated as receiving penetrants, overlays, or coverings without prior written acceptance from the manufacturer based on actual in-service conditions.
   1. When temporary curing compounds are used to cure flatwork, then mechanical abrasion, including planing and grinding, must be provided before beginning installation of any penetrant or overlay, including substrate preparation, to achieve complete removal of any film left behind that does not dissipate. If mechanical abrasion methods do not adequately remove curing compounds, , then shot blasting, bead blasting, and abrasive blasting must be utilized to achieve complete curing compound removal.
   2. When permanent curing compounds are used to cure flatwork, then shot blasting, bead blasting, and abrasive blasting down to a level below curing compound penetration must be provided before beginning application of any penetrant or overlay, including substrate preparation, to achieve complete curing compound removal.

D. Temporary Curing Compounds (Chemically Dissipating Compounds):
   1. Description: Resin-based liquid membrane-forming curing compound conforming to ASTM C 309, Type 1-D (clear or translucent with fugitive dye that loses its coloring during proper usage), Class A (no restrictions) or Class B (resin).
   2. Restrictions: Temporary curing compounds must be completely removed before beginning floor covering installation
   3. Products: “KUREZ DR-100” manufactured by The Euclid Chemical Co., or equal.

E. Permanent Curing Compounds (Non-Dissipating Compounds):
   1. Description: Water-based curing compound conforming to ASTM C 1315, and must be specially formulated and warrantied for proper concrete curing and chemical and adhesive compatibility with all covering adhesives and materials.
   2. Restrictions: Use only where floor coverings are indicated.
   3. Products: “FloorBond 710” manufactured by Floor Seal Technology, Inc., or equal.

F. Combination Curing Compounds: Cure & seal; cure & harden; cure, seal, & harden; cure, seal, harden & dustproofing; and other combination curing compounds are prohibited.

G. Requisite Properties:
   1. Water Retention Rate: Maximum water loss may not exceed 0.40 kilograms per square meter in 72 hours, when tested in conformance with ASTM C 156.
   2. Maximum VOC Content: Not more than 60 grams per liter.

2.04 PREVENTATIVE (DAY-OF-POUR) MVECS

A. Description: Resin-based compound conforming to ASTM C 1315 and specially formulated for proper concrete curing; reducing moisture vapor emission levels to a specific and measurable

rate; reducing shrinkage cracking; and chemical and adhesive compatibility with all floor covering adhesives and materials.

B. Application: With input from the preventative MVECS manufacturer, day-of-pour preventative MVECS may be considered for certain curing applications in lieu of curing compounds; and possibly in lieu of corrective (remedial) MVECS products specified in Section 09 05 16.

C. Restrictions: When substrates receiving day-of-pour preventative MVECS subsequently demonstrate during testing MVER and pH exceeding the limits required, recommended, or accepted by the penetrant, overlay, and covering manufacturers' published limits, preventative MVECS manufacturer must apply to those areas the corrective (remedial) MVECS products specified in Section 09 05 16 at no additional expense to the Contractor or Owner.

D. Products: "VaporSeal 309" manufactured by Floor Seal Technology, Inc., or equal.

E. Requisite Properties:
   1. Minimum Water Retention Rate: Maximum water loss of not more than 0.40 kilograms per square meter in 72 hours, when tested in conformance with ASTM C 156.
   2. Maximum VOC Material Content: Not more than 100 grams per liter.

2.05 FLOOR PROTECTION MATERIALS

A. Description: Disposable natural-color cellulose fabric consisting of a softer bottom layer (to help prevent surface scratches) and a harder top layer (to help shield against contaminants and potential impact hazards); and designed specifically to help protect flatwork and flooring during construction.

B. Application: Install where needed to protect slabs, stone, hardwood, terrazzo, and other flooring from surface contamination, abrasions, scratches, potential impact hazards, and other harmful occurrences.

C. Restrictions: At least 2 times per day, once before lunch and once before the end of the day, surface protection must be checked for holes or tears and repaired.
   1. Surface-contaminated areas must be replaced with new surface protection covering.
   2. 100-percent contact between the surface protection and protected surfaces must be ensured.
   3. Nails, screws, and other small sharp items must be removed from both surface protection and wheels of lifts and other wheeled construction aids.

D. Product: "EZcover" manufactured by McTech Group, Inc., or equal.

2.06 ACCESSORIES

A. Screed Stakes: Prohibited. Screeding system may not puncture the below grade VDRs.

B. Wet Concrete RH Meter Accessories:
   1. Description: Disposable plastic tubes for measuring humidity in concrete.
   2. Manufacturer: Provide accessories manufactured by Vaisala Inc., or equal.
   3. Products: Provide all of the following parts for wet concrete installations.

      a. Plastic Tube Set: Vaisala Part No. 19266HM, or equal.

      b. Plastic Flange Set: Vaisala Part No. 26529HM, or equal.

      c. Long Rubber Plug Set: Vaisala Part No. 26530HM, or equal.

C. Saw Blades:
   1. Description: Diamond blades for early-entry dry-cut saws.
   2. Products: “Soff-Cut” manufactured by Husqvarna Construction Products, or equal.

D. Other Accessories: Provide accessories and secondary items normally furnished or necessary for a complete installation; or supplied, required, recommended, or accepted by the manufacturer for actual in-service conditions applicable to the project.

PART 3 - EXECUTION

3.01 EXAMINATION

A. Oversight: Ensure an adequate number of supervisors are present and proper supervision practices are followed at the project site before the installer begins work and at all times during installation.

B. Verification: Verify formwork, VDRs, and items penetrating flatwork are installed.

C. Evaluation and Assessment:
   1. Identify project conditions that do not conform to the manufacturer’s instructions and other requirements and recommendations.
   2. Perform or arrange and pay costs for all remedial work necessary to correct or improve deficient conditions, without limitation, before the installer begins work.

3.02 FINISHING

A. General:
   1. Comply with ACI 302.1R recommendations for screeding, floating, re-straightening, and finishing flatwork, including the proper use of a highway straightedge where applicable.
   2. Protect concrete from rapid moisture loss before and during finishing operations.
      a. Apply evaporation reducer as needed prior to beginning finishing operations, and periodically during finishing.
      b. Do not apply water to the slab surface during finishing operations.
   3. Finish flatwork to produce uniform surface appearance throughout the area involved and adjacent areas with the same finish.
   4. Compacting and Floating:
      a. Use continuous screeds spaced or located to produce specified substrate tolerances. Bring substrates to proper level and strike-off with a straightedge.
      b. Remove excess water and laitance.
      c. Compact and consolidate to embed coarse aggregates.
      d. Float and test surfaces with a 10-foot straightedge and eliminate high and low spots.
      e. Use methods and tools necessary to produce proper finishes and tolerances.
   5. Concrete Placed over Metal Decking:
      a. Use adjustable screeds at all screeded points and adjust to compensate for deck, beam, and girder deflection; and for deflection occurring during concrete placement.

b. Do not use steel closures at metal deck edges as screeds.

c. Continuously monitor screeds and substrates during concrete placement and finishing and adjust concrete floor thickness as required to obtain level floors conforming to specified tolerances.

B. Rough Finishes
1. Basic Finishing: Screed and bullfloat flatwork surface.
2. Scratch Finishing: Beginning with a basic finish, roughen the flatwork surface with stiff brushes, brooms, or rakes to produce a 1/4-inch surface profile in one direction before final set.
3. Float Finishing:

a. Beginning with a basic finish, consolidate flatwork surfaces using power-driven floats; or by hand floating if areas are too small or inaccessible by power-driven floats.

b. Re-straighten, cut down high spots, and fill low spots.

c. Repeat float passes and re-straightening actions until flatwork is left with a uniform, smooth, granular texture.

C. Textured Finishes:
1. Broom Finishing:

a. Beginning with a float finish, lightly steel trowel to remove irregularities.

b. Roughen flatwork by drawing at least a 24-inch-wide fiber bristle broom (for medium broom finish) or steel bristle broom (for heavy broom finish), across the flatwork surface perpendicular to the main direction of traffic.

c. Produce even texture from edge to edge; slightly lap adjacent strokes to produce a uniform pattern.

d. Obtain the Architect’s approval for proposed texture before final application.

D. Smooth Finishes:
1. Light Steel Trowel Finishing (requires at least one pass):

a. Beginning with a float finish, consolidate flatwork surface by hand troweling.

b. Continue trowel passes and re-straightening actions until flatwork surfaces are free of trowel marks, are uniform in texture and appearance, and fall within specified flatness tolerances.

c. Grind smooth all surface defects that might telegraph through applied floor coverings.

d. Steel trowel to a hard, dense finish.
2. Normal Steel Trowel Finishing (requires at least 2 passes):

a. Beginning with a light trowel finish, continue hand troweling until a ringing sound is produced as the trowel is moved over the surface.

b. Continue trowel passes and re-straightening actions until flatwork surfaces are free of trowel marks, are uniform in texture and appearance, and fall within specified surface plane tolerances.

c. Grind smooth all surface defects that might telegraph through applied floor coverings.

d. Steel trowel to a hard, dense finish.

3. Hard Steel Trowel Finishing (requires at least 3 passes):

    a. Beginning with a normal trowel finish, continue hand troweling until a ringing sound is produced as the trowel is moved over the surface.

    b. Continue trowel passes and re-straightening actions until flatwork surfaces are free of trowel marks, are uniform in texture and appearance, and fall within specified surface plane tolerances.

    c. Grind smooth all surface defects that might telegraph through applied floor coverings.

    d. Steel trowel to a hard, dense finish.

4. Restrictions:

    a. Do not hard trowel air entrained concrete.

    b. Do not hard trowel exterior concrete.

    c. Do not normal or hard steel trowel interior slabs on grade having an underslab vapor retarder.

3.03 TOLERANCES

A. General:

1. Flatwork must conform to the tolerance classifications indicated below, when measured with an optical or laser level.
2. When floor flatness is measured with a straightedge, flatwork must be measured in conformance with ASTM E 1486 between 16 and 72 hours after final troweling using a 10-foot straightedge placed anywhere on the slab in any direction and allowing it to rest on 2 high spots.
3. When flatwork is not sloped, floor flatness and levelness must be measured in conformance with ASTM E 1155 between 16 and 72 hours after completion of final troweling.

    a. Specified flatness values apply to both slabs on grade and elevated slabs.

    b. Specified levelness values apply only to slabs-on-grade and to elevated slabs when the slab remains supported in its as-cast position and there is no camber present.

    c. Specified levelness values do not apply to inclined or cambered slabs.

B. Conventional Tolerance Classifications:

1. Bullfloat Tolerance:

    a. Description: True plane with not more than 5/16-inch in 10 feet variation.

    b. Flatness: SOV between F(f) 13 and F(f) 20, with MLV at least F(f) 13.

    c. Levelness: SOV at least F(l) 15 with MLV at least F(l) 10.

2. Straightedge Tolerance (Conventional):

    a. Description: True plane with not more than 1/4-inch in 10 feet variation.

    b. Flatness: SOV between F(f) 21 and F(f) 25, with MLV at least F(f) 17.

c. Levelness: SOV at least F(l) 17 with MLV at least F(l) 11.

C. Traditionally Flat Tolerance Classifications:

1. Moderately Flat Tolerance (Good):

a. Description True plane with not more than 3/16-inch in 10 feet variation.

b. Flatness: SOV at least F(f) 38, with MLV at least F(f) 26.

c. Levelness: SOV at least F(l) 25 with MLV at least F(l) 17.

2. Flat Tolerance:

a. Description: True plane with not more than 1/8-inch in 10 feet variation.

b. Flatness: SOV at least F(f) 50, with MLV at least F(f) 34.

c. Levelness: SOV at least F(l) 30 with MLV at least F(l) 20.

D. Exceptional Flat Tolerance Classifications: Not used.

3.04 CURING

A. General:

1. Protect newly-finished concrete from premature drying and excessive cold or hot temperatures. Comply with ACI 306.1 requirements for cold-weather protection, and with ACI 301 requirements for hot-weather protection during curing.

a. Cold Weather Requirements: When flatwork is subjected to freezing temperatures within 24 hours after placement, or when flatwork is subjected to a period of 3 or more successive days within 7 days after placement where average daily outdoor temperature drops below 40 deg. F, flatwork must be protected from freezing. After placing concrete, maintain air temperature adjacent to flatwork to at least 50 deg. F for at least 7 days; or at least 70 deg. F for at least 3 days, and then at least 40 deg. F for at least 4 more days.

b. Hot Weather Requirements: When hot weather conditions may cause an evaporation rate exceeding 0.2 pounds of water per square foot per hour, cure flatwork for at least the first 24 hours by water curing, fogging and sprinkling absorbent coverings, or wet covering curing methods.

2. Comply with ACI 308.1 requirements for concrete curing, utilizing one or more of the methods indicated below that do not mottle, discolor, or stain the concrete.
3. Begin curing concrete promptly after free water has disappeared from flatwork surfaces after finishing.
4. Comply with ACI 308R requirements for preventing flatwork from becoming dry during curing.

B. Wet Covering Curing:

1. Promptly after troweling or finishing, and as soon as can be done without marring concrete surfaces, thoroughly wet concrete and cover with a moisture-retaining sheet membrane cover.

a. Lay sheet membrane in widest practicable width, with sides and ends lapped at least 12 inches, and extended 18 inches beyond area of concrete to be cured.

b. Seal laps and seams with pressure-sensitive waterproof tape or adhesive.

c. Maintain a film of water under the cover through the curing period by rolling back and rewetting.

d. Immediately repair any holes, tears or other damage to sheet membrane during the curing period.

2. Leave sheet membrane in place as temporary protection for as long as possible.

C. Curing Compounds: Either before or after bleed water has disappeared, at the discretion of the curing compound or MVES manufacturer, keep concrete flatwork surfaces continuously moist during the curing period by one of the following curing methods.

1. Promptly after troweling or finishing, and as soon as it can be accomplished without marring or damaging concrete finish, mist concrete surfaces with water and apply curing compound uniformly in one continuous operation in conformance with its manufacturer instructions.

   a. When the curing compound manufacturer recommends a coverage range, either use heavier application rate or consult with Architect and manufacturer for appropriate coverage rate based upon intended use.

   b. Do not exceed manufacturer's recommended coverage rate.

2. Maintain continuity of coating and repair damage during curing period.

   a. Examine application at regular intervals to verify compound film is intact.

   b. If damaged, moisten the concrete and apply additional compound.

   c. Recoat areas subjected to heavy rainfall within three hours after initial application.

3. Special Techniques:

   a. Uniformly apply 2 coats in a continuous operation with second coat at right angle to first coat. Total coverage for two coats may not exceed 200 square feet per gallon of undiluted compound, unless otherwise recommended by the manufacturer's written instructions.

   b. The compound shall form a uniform, continuous film that will not crack or peel. Immediately apply an additional coat of compound to areas where film is defective.

   c. Recoat concrete surfaces subjected to rainfall within 3 hours after the curing compound application.

   d. Maintain compound on the concrete surface throughout the curing period and immediately repair any damage.

3.05 FIELD QUALITY CONTROL

A. Tests and Inspections: Specified in Section 03 30 00.

3.06 CORRECTION AND REPAIR

A. Non-conforming and defective work must be brought into conformance with the Contract Documents. Correct and repair as necessary, without limitation, including arranging all correction and repair work and paying all correction and repair costs, until accepted in writing by the Architect.

B. Corrective and repair work must be performed in conformance with a correction and repair plan submitted to and accepted in writing by the Architect before correction or repair work begins. At a minimum, correction and repair plans must include

1. written descriptions of non-conforming, damaged, and defective work;

2. supporting sketches, diagrams, photographs, and other visual depictions of non-conforming, damaged, and defective work; and
3. similar written descriptions and visual depictions of Contractor-proposed corrections and repairs.

C. Arrange and pay costs for removing and replacing work that cannot be corrected or repaired to the Architect's acceptance.

3.07 CLEANING

A. Waste Management: After completing the work of this specification section, leave work areas free from debris, waste, scrap, equipment, tools, and other items.

3.08 PROTECTION

A. Protect flatwork in place from soiling, deterioration, and damage until Substantial Completion, including
   1. heavy construction traffic;
   2. hard-wheeled traffic;
   3. impact and abrasion;
   4. imposed loads (i.e., cranes, concrete trucks);
   5. stains from grease, oil, chemicals, paint, plaster, clay, soil, and other sources;
   6. rubber tire marks;
   7. deicers;
   8. freezing;
   9. fireproofing applications specified in Division 07;
   10. chemicals, fluids, and other items present during testing of fire suppression systems specified in Division 21; and
   11. re-wetting after initial drying, including from rain, wash water, and spillage by other trades and other sources.

B. Petroleum stains cannot be removed from concrete.
   1. Hydraulic powered equipment must be diapered to avoid concrete staining.
   2. Other vehicle parking on flatwork is prohibited.

C. Do not store anything on or adjacent to or against installed flatwork unless it is protected from damage. Use of pipe-cutting machines on flatwork is prohibited.

D. Remove protection when it's no longer needed and before Substantial Completion.

END OF SECTION

©AWCWEST 18E22 All rights reserved.
RSTLNE, TAGDSC, ELMTA, CLSA1010, CLSA1020, CLSA4010, ELMTB, B1010, B1020, B1080, ELMTG, G2030

SECTION 03 54 16
HYDRAULIC CEMENT UNDERLAYMENT

PART 1 - GENERAL

1.01 SUMMARY

A. Section Includes:
   1. Hydraulic cement underlayment.
   2. Repair material.
   3. Surface preparation.
   4. Installation materials.
   5. Supplementary components and accessories normally furnished or necessary for a complete installation, whether or not such items are indicated on the Drawings or included in the Specifications.

B. Related Requirements:
   1. Section 03 35 10 for concrete flatwork finishing and curing; and for preventative MVER products.
   2. Section 09 05 16 for preparation of concrete slabs for finish flooring; and for remedial MVER products.

1.02 SECTION REQUIREMENTS

A. Qualifications:
   1. Installer: Company or individuals must have at least 5 years' experience installing cement underlayment for at least 30 previous projects similar to this project in size, material, design, and complexity.
   2. Supervisors: Individuals must have at least 7 years' experience installing cement underlayment for at least 30 previous projects similar to this project in size, material, design, and complexity, including at least 2 years' supervisory experience directing and leading cement underlayment installers.

B. Submittals: Submit product data and written descriptions of specified qualifications.

PART 2 - PRODUCTS

2.01 MANUFACTURERS

A. Cement underlayment Manufacturer: Provide products manufactured by one of the following, or equal.
   1. ARDEX Group.
   2. Custom Building Products.
   3. Floor Seal Technology, Inc.
   4. LATICRETE International, Inc.
   5. Mapei Corp.

2.02 HYDRAULIC CEMENT UNDERLAYMENT

A. Description: Portland-cement-based, non-structural, engineered cementitious material specifically designed for use as interior flooring cement underlayment.

B. Application: Installed over subfloors to help achieve specified floor flatness values; and to smooth and correct surface irregularities prior to flooring installation.

C. Self-Leveling Products:
   1. Pourable Grade Cement underlayment Applications (0 to 1-1/4 inches thick): “ARDEX V-1200” self- leveling, no-troweling cement underlayment manufactured by ARDEX Engineered Cements, or equal. Primer is required.
   2. Thick Cement underlayment Applications (1/16- to 1/4-inch thick): “ARDEX K 55 MICROTEC” microfiber reinforced, self-leveling cement underlayment manufactured by ARDEX Engineered Cements, or equal. Primer is required.
   3. Thicker Cement underlayment Applications (1/4-inch to 5 inches thick): “ARDEX K 15” self-leveling polymer-modified cement underlayment manufactured by ARDEX Engineered Cements, or equal. Primer is required.

      a. For cement underlayment application thickness between 1/4-inch and 1-1/2 inches thick, apply neat.

      b. For cement underlayment application thickness between 1-1/2 and 5 inches thick, apply with aggregate.

D. Trowel Grade Products:
   1. Patching and Cement underlayment Applications (0 to 1/16-inch thick): “ARDEX SD-F Feather Finish” self-drying, finishing cement underlayment manufactured by ARDEX Engineered Cements, or equal. Primer is typically not required.
   2. Non-Structural Flatwork Repair: “ARDEX CP” Portland cement-based concrete patch and fill for indoor and outdoor concrete flatwork manufactured by ARDEX Engineered Cements, or equal.

2.03 REPAIR MATERIALS

A. Description: Trowel-grade cementitious products used for non-structural repair indoor and outdoor concrete flatwork.

B. Product: “ARDEX CP” manufactured by ARDEX Engineered Cements, or equal, unless another type is explicitly indicated or otherwise supplied, required, recommended, or accepted by the manufacturer

2.04 SURFACE PREPARATION

A. Substrate Testing and Surface Preparation: Perform testing and corrective work and prepare substrates in conformance with the requirements of Section 09 05 16.

B. Concrete Surface Profiling: Provide ICRI concrete surface profile CSP 3 to CSP 5 (light to medium shotblast between 10 and 40 mils), unless otherwise explicitly required, recommended, or accepted in writing by the covering manufacturer. Conform to the requirements of Section 09 05 16.

2.05 INSTALLATION MATERIALS

A. Primers:
   1. Standard Absorbent Concrete, Gypsum, and Other Porous Substrates (in Specialized Applications): “ARDEX P 51” manufactured by ARDEX Engineered Cements, or equal.
      a. Two applications of primer must be applied over gypsum cement underlayment.
      b. Two applications of primer may be required over absorbent concrete cement underlayment.
   2. Wood, Cutback Residue, Metal, and Other Non-Porous Substrates: “ARDEX P 82 ULTRA PRIME” manufactured by ARDEX Engineered Cements, or equal.

B. Additive: “ARDEX E 25” resilient emulsion manufactured by ARDEX Engineered Cements, or equal, for use over cutback and other adhesive residues on concrete subfloors only; over metal; and as part of mesh-reinforced wood subfloor systems.

C. Crack Repair Compound: “ARDEX ARDIFIX” 100-percent solids, 2-part polyurethane repair compound manufactured by ARDEX Engineered Cements, or equal, for repair of non-moving joints and cracks.

D. Joint Filler: “ARDEX ARDISEAL Rapid Plus” 2-part, self-leveling, semi-rigid polyurea joint filling compound manufactured by ARDEX Engineered Cements, or equal, for repair of all moving joints.

E. Sand: Washed masonry or plaster sand, 1/8-inch diameter and smaller.

F. Aggregate: Well-graded washed gravel, 1/8- to 1/4-inch diameter or larger, supplied, required, recommended, or accepted by the manufacturer for proposed thicknesses.

G. Mix Water: Provide fresh, clean, clear, potable water from a domestic source. Water must conform to ASTM C 1602 and be free of oil, grease, waxy films, curing compounds, release agents, and other deleterious materials, including salts, acids, alkalis, organic materials, detergents, and other matter that might negatively affect cement underlayment quality, durability, or performance.

2.06 ACCESSORIES

A. Perimeter Isolation Strips: Supplied, required, recommended, or accepted by the manufacturer.

B. Other Accessories: Provide accessories and secondary items normally furnished or necessary for a complete installation; or supplied, required, recommended, or accepted by the manufacturer for actual in-service conditions applicable to the project.

PART 3 - EXECUTION

3.01 INSTALLATION REQUIREMENTS

A. General:
   1. Ensure proper supervision practices are followed at the project site before the installer begins work and at all times during installation.
   2. Verify in-place supporting and adjacent construction conforms to the manufacturer’s requirements or recommendations, and satisfies all other conditions that might affect the

quality of installation or the durability, appearance, or performance of installed and adjacent items.

3. Protect work areas, surfaces, in-place construction, and installed and adjacent items against soiling and damage.
4. Prepare surfaces as required, recommended, or accepted by the manufacturer without limitation; and in a manner that does not result in any warranty or guarantee becoming void.
5. Install cement underlayment using materials and methods required, recommended, or accepted by the manufacturer, along with manufacturer-recommended accessories and techniques.

B. Special Techniques:

1. Thickness: Install screeds as required, recommended, or accepted by manufacturer to meet the following.

    a. Set screeds with a laser level so the minimum cement underlayment thickness is at least 1/8 inch.

    b. Where cement underlayment covers only a small area, grind, chisel, and undercut floor and deck slabs as necessary to ensure a minimum cement underlayment thickness of at least 1/8 inch.
2. Place cement underlayment in one continuous operation, without cold joints, to produce uniform, level surfaces.

    a. Screed cement underlayment to levels and tolerances required, recommended, or accepted by the finish flooring manufacturer.

    b. Feather edges to match adjacent floor elevations.
3. Cure cement underlayment in conformance with the manufacturer's instructions. Protect cement underlayment to prevent contamination during application and curing processes.

C. Correction and Repair:

1. Correct deficiencies that do not conform to the Contract Documents.
2. Repair non-conforming, damaged, and defective work.
3. Remove and replace cement underlayment areas that evidence lack of bond with substrate, including areas that emit a “hollow” sound when tapped.
4. Installed cement underlayment must be warrantable. Do not install, correct, or replace cement underlayment in a manner that is un-warrantable by the manufacturer or that results in any warranty or guarantee becoming void.

END OF SECTION

©AWCWEST 18E22 All rights reserved.
RSTLNE, TAGDSC, ELMTB, CLSB1010

DIVISION 04

MASONRY

SECTION 04 01 20
MASONRY RESTORATION AND CLEANING

PART 1 - GENERAL

1.01 SUMMARY

A. Section Includes:
   1. Pressure injection of epoxy resin and cleaning of existing masonry and stone work.
   2. Repointing and caulking of cracks.
   3. Removal of plant growth.
   4. Supplementary components and accessories necessary for a complete installation, whether or not such items are indicated on the Drawings or included in the Specifications.

1.02 SECTION REQUIREMENTS

A. Submittals: Submit product data, shop drawings, and samples.

B. Field Samples: Include field samples (post-submittal, *in situ* visual mockups) as part of the work of this specification section.
   1. Revise and repeat field samples and reviews, including bearing all associated costs, until acceptance by the Architect.
   2. After field samples are accepted in writing by the Architect, promptly protect them for reference until Substantial Completion.
   3. Approved field samples may remain part of the work after being properly identified for future reference.

C. Warranties:
   1. Manufacturer's Warranty: All masonry products must be covered by a 10-year manufacturer-prepared published warranty.

D. Maintenance Materials: Before Final Completion, deliver to the Owner masonry cleaning agents, materials, equipment, tools, accessories and instructions; and extra stock materials to replace materials worn or damaged as a result of normal occupancy.

PART 2 - PRODUCTS

2.01 MANUFACTURERS

A. Manufacturers: Provide products manufactured by one of the following, or equal.
   1. Sika Corporation.
   2. Fosroc Inc.
   3. The Euclid Chemical Company.

2.02 MATERIALS

A. Epoxy Resin Adhesive:
   1. New material within the shelf life recommended by manufacturer.
   2. Two-part material made from 100 percent solids of modified epoxy resin containing suitable viscosity control agents and accelerators.

3. Mix components in ratio recommended by product manufacturer.
4. Material shall not contain butyl glycidyl ether or asbestos.
5. Epoxy resin adhesive shall be approved by the United States Department of Agriculture.

B. Materials for Masonry Restoration: Provide products manufactured by one of the following, or equal.
1. Sikadur 35, Hi-Mod LV, by Sika Corporation.
2. Nitobond LV, by Fosroc Inc.
3. Euco #452 LV System, by the Euclid Chemical Company.

C. Materials for Cleaning Masonry:
1. Acid Solution: Clean, stain free, commercial hydrochloric (muriatic) acid mixed with potable water:

a. Use 10 parts water for dark colored brick.

b. Use 15 parts water for light colored brick.

D. Mortar: ASTM C387, Type N or M, using gray or white cement, commercially prepared type.

E. Hydrated Lime: ASTM C207.

F. Quicklime: ASTM C5, non-hydraulic type.

G. Sand (for sandblasting): Quartz type, sharp edged.

H. Masonry Anchors:
1. DA 213 Seismic as fabricated by DUR-O-WAL, or equal, when brick is removed and installed.
2. Masonry anchors shall be D 5300 series for brick veneer around wood framing when brick is left in place.

2.03 ACCESSORIES

A. Accessories: Provide accessories and other similar secondary items supplied, required, recommended, or accepted by the manufacturer for a complete installation.

PART 3 - EXECUTION

3.01 INSTALLATION REQUIREMENTS

A. General:
1. Examine project conditions and field-verify measurements and other conditions affecting the work of this specification section.
2. Verify that in-place construction conforms to the manufacturer’s requirements and satisfies all other conditions that might affect the quality of installation or the durability, appearance, or performance of installed and adjacent items.
3. Protect work areas, work surfaces, in-place construction, and installed and adjacent items against damage and soiling.
4. Prepare surfaces as required, recommended, or accepted by the manufacturer without limitation; and in a manner that does not cause, contribute or lead to, or result in any specified or other warranty becoming void.
5. Install masonry using materials and methods required, recommended, or accepted by the manufacturer, along with manufacturer-recommended accessories and techniques.

a. Set masonry true to line; plumb, level, and square without warp or rack; with flush, well-fitted joints; and in alignment with adjacent construction.

b. Securely attach masonry in place to supporting construction.

c. Provide dissimilar metal protection specified in Section 05 50 00.

6. Completed work must match approved mockups, as accepted by the Architect.

B. Correction and Repair:

1. Correct deficiencies that do not conform to the Contract Documents.

a. Repair non-conforming, deficient, deteriorated, damaged, defective, malfunctioning, or unsafe work; and work that does not perform or operate safely, properly, or as otherwise specified.

b. Replace soiled items that cannot be satisfactorily cleaned.

c. Remove and replace items that are wet; or moisture- or mold-damaged.

2. Installed items must be warrantable. Do not install, correct, repair, or replace any item, material, component, or accessory in a manner that is un-warrantable by the manufacturer; or that leads to or results in any other specified or other warranty or guarantee becoming void.

C. Protection:

1. Protect installed items in place from deterioration, staining, and damage until Substantial Completion.
2. Do not store anything on or adjacent to or against installed masonry unless they are adequately protected from damage, as accepted in writing by the manufacturer's representative. Do not use installed masonry surfaces as work surfaces.
3. Remove protection when it's no longer needed and before Substantial Completion.

END OF SECTION

SECTION 04 22 00
CONCRETE MASONRY UNIT

PART 1 - GENERAL

1.1 SUMMARY

A. Provisions of the General and Supplementary Conditions and Division 01 apply to this section.

B. Section Includes:

1. Concrete masonry units.

2. Reinforcing steel.

3. Mortar, grout and grouting.

4. Bolts, anchors, hardware, metal frames, and other insert items.

C. Related Sections:

1. Section 01 45 23: Testing and Inspection

2. Section 30 10 00: Concrete Forms and Accessories..

3. Section 03 20 00: Concrete Reinforcement.

4. Section 03 30 00: Cast-In-Place Concrete.

1.2 SUBMITTALS

A. Mix Design: Submit grouting mix design.

B. Product Data: Submit manufacturer's Product Data for assembly components, materials, and accessories.

C. Samples: Submit Samples for each type of required masonry unit, including reinforcement and accessories.

1.3 QUALITY ASSURANCE

A. Perform the Work in accordance with CBC, Chapter 21A. Refer to Section 01 45 23: Testing and Inspection.

B. Comply with requirements of TMS 602/ACI 530.1/ASCE 6.

C. Concrete Masonry Units: Sample and test in accordance with ASTM C 140.

1. Notify the testing laboratory a minimum of 45 days in advance of installing concrete unit masonry, to allow for testing of the units for compression, shrinkage, and absorption. Absorption test requires 40 days.

2. The retained material testing laboratory shall receive five concrete masonry units per test from masonry unit manufacturer, as designed or specified by the Architect, and shall perform and send required test results to the Architect and IOR.

D. Portland Cement: Obtain sample and test in accordance with ASTM C 150.

E. Mortar: Obtain sample and test in accordance with ASTM C 780.

F. Grout: Obtain sample and test in accordance with ASTM C 404.

G. Compressive Tests: Obtain sample and test to verify compliance with the following minimum values:

1. Mortar: At least 800 psi at 7 days and 1,800 psi at 28 days.

2. Grout: At least 1,200 psi at 7 days and 2,000 psi at 28 days.

3. Do not test 28-day specimen when 7-day tests exceed 28-day requirements.

H. Inspection During Installation: IOR will continuously observe the installation of reinforced masonry.

I. The Owner will be responsible for the costs of original tests and inspection.

J. If core testing is required by DSA, masonry removed by coring operations shall be replaced to match adjoining Work. Core testing shall conform with CBC, Chapter 21A.

1.4 DELIVERY, STORAGE AND HANDLING

A. Store units above grade on level platforms to allow air circulation under stacked units.

B. Cover and protect against wetting before installation.

C. Handle units on pallets or flat bed barrows. Free discharge from conveyor units or transportation in mortar trays is not permitted.

PART 2 - PRODUCTS

2.1 MATERIALS

A. Concrete Unit Masonry: Modular medium weight conforming to ASTM C 90, hollow load-bearing concrete unit masonry.

1. Provide open-end units at walls to be grouted.

2. Provide closed-end units at walls and at openings where ends will be exposed in finish Work; provide bond beam blocks where horizontal reinforcing is indicated.

3. Provide special shapes and accessory units at locations indicated on Drawings.

4. Except as otherwise specified, provide units in standard gray color.

5. Masonry unit shall have been cured for a minimum of 28 days.

6. Masonry unit shall have maximum linear shrinkage or 0.065 percent from saturated to oven dry.

B. Portland Cement: ASTM C 150, Type II, from one source.

C. Mortar: ASTM C 270.

D. Grout: ASTM C 476.

E. Hydrated Lime: ASTM C 207, Type S.

F. Admixture for Grout: Grout Aid Type 2, complying with DSA requirements; as manufactured by Sika Chemical Corp. Refer to Section 01 45 23: Testing and Inspection.

G. Water: Potable and fresh.

H. Cleaning Materials: Shure Klean No. 600 detergent by ProSoCo.

I. Miscellaneous Materials: As required to complete the Work.

J. Sampling and Testing of Mortar: Refer to Section 01 45 23: Testing and Inspection.

PART 3 - EXECUTION

3.1 EXAMINATION

A. Discard units with cracked faces, chipped surfaces, or other defects not complying with requirements of ASTM C 216.

3.2 MORTAR AND GROUT MIXING

A. Mortar: Dry, loose volumes. Mix proportions shall be verified by material testing laboratory.

1. Portland Cement: 1 part.

2. Hydrated lime: 1/4 to 1/2 part.

3. Mortar sand: 2-1/4 to 3 parts.

4. Water: to provide required consistency.

5. Mixing time for Silotec Mortar System shall be in accordance with Silotec Mortar System recommendations instead of those indicated in Section 01 45 23: Testing and Inspection.

B. Grout: Shall provide a minimum strength of 2000 psi unless noted otherwise. Grout strengths in excess of more than 2000 psi shall be verified by a material testing laboratory.

1. Fine Grout: Portland Cement 1 part; sand 2 ¼ to 3 parts; water to attain a slump of 8 to 10 inches.

2. Coarse Grout: Portland Cement 1 part; pea gravel 2 ¼ to 3 parts; water to attain a slump of 8 to 10 inches.

C. Measurements: Proportion by accurate volume measurements. Measure in calibrated devices that can be checked at any time.

1. Add water for workable consistency.

2. Shovel measurements are not permitted.

D. Mixing: Place sand, cement, and water in mixer in that order, while mixer is running; mix for 3 minutes, add lime, and admixture (for grout), and continue mixing until a uniform mass is provided, but in no case less than 10 minutes.

1. Equipment for mixing and handling mortar and grout shall be acceptable to DSA.

2. Batches of less than one sack of cement, and fractional sack batches are not permitted.

E. Re-tempering Time Limit: Re-temper on mortar boards, for at least 3 minutes, but not more than 10 minutes when required, by adding water into a basin formed by mortar, and installing mortar into it. Dashing, or pouring of water over mortar is not permitted.

1. Do not re-temper mortar which has become hard or non-plastic.

2. Discard mortar, which has not been installed within one hour after original mixing.

3. Ready-Mix Grout: Grout batched off the Project site and delivered by mixer truck shall be subject to same procedures and controls as prescribed by DSA building code requirements. Refer to Section 01 45 23: Testing and Inspection.

3.3 INSTALLATION OF MASONRY UNITS

A. Workmanship: Install masonry plumb and true to line with straight level joints of uniform thickness. Maintain masonry clean during and after installation.

1. Lay-out and incorporate embedded hardware items.

2. Assist other trades with built-in items, which require cutting and fitting of masonry.

3. Cut block units with a diamond saw or carborundum wheel. Trowel or chisel cutting is not permitted.

4. Keep cavities clear of droppings and debris. Remove promptly.

B. Reinforcing Steel: Install as indicated on Drawings. Except as otherwise indicated, install reinforcement in accordance with standards of Concrete Reinforcing Steel Institute and to requirements specified in Section 03200: Concrete Reinforcement. Do not splice vertical reinforcing except where indicated on the Drawings.

C. Shoring: Provide temporary shoring for lintels with sufficient strength to carry load without deflecting. Remove temporary shoring 28 days after masonry has been installed.

D. Block Installation: Clean dirt and dust from surfaces before installation. Do not wet masonry units except in very dry weather.

1. Foundation preparation: Sandblast tops of concrete starting surfaces, wash-off by high pressure water jet, and slurry coat surfaces with neat cement grout for bond to masonry.

2. Install masonry with mortar to required joint thickness. Install blocks with 3/8-inch mortar bed on entire horizontal surface. Fill head joints solid, install tightly to adjoining units. Provide 3/8-inch joint thickness.

a. Hold racking to a minimum.

b. No toothing is permitted.

c. If it becomes necessary to move a unit after it has been installed, remove the unit, discard the mortar, and install the unit in fresh mortar.

3. Anchor Bolts: Provide one-inch minimum grout space around protruding bolts.

4. Bond: Unless otherwise indicated, install units in common running bond.

5. Finish Joint Treatment: Unless otherwise indicated, cut both interior and exterior joints flush, and tool slightly concave to a dense, uniform surface.

6. Grouting: Unless noted otherwise on Drawings, completely fill cells with grout.

E. Steel Door Frames:

1. Locate doorframes accurately, install plumb, "Ram-set" or "Rawlplug" to floor surface and brace in position before start of masonry installation.

a. Frames are specified to be furnished with adjustable anchors.

b. Fill interior of frames solid with mortar or grout as walls are constructed.

2. Provide temporary wood spreaders from jamb to jamb and from head to floor to ensure that jambs do not bow-in, distort from a straight line, or deflect from superimposed loads during construction.

3.4 LOW-LIFT GROUTING FOR HOLLOW MASONRY UNITS

A. After mortar joints have set, cores are cleaned of mortar and debris, and reinforcing is installed and inspected, grout cells in 2 feet maximum lifts, providing specified pea gravel grout mix. Refer to Section 01 45 23: Testing and Inspection.

B. Grouted walls shall be solid and without voids.

C. Grout may be installed by pump, tremie or bucket, using hoppers to avoid spilling on exposed surfaces.

D. Place an initial 2 feet high lift around, thoroughly compact, then place balance of each lift, compacting again through total lift, with hardwood spading sticks or pencil vibrators.

E. Stop grout pours 1-1/2 inches below top of each lift.

F. Remove and discard spilled grout from upper units before grout can harden.

G. Bracing: Adequately brace walls against wind and other forces during and after construction.

H. Re-puddle top of grout after initial set.

3.5 HIGH-LIFT GROUTING OPTION FOR HOLLOW MASONRY UNITS

A. High-lift grouting method is permitted provided following qualifications and requirements are met. High-lift grouting shall apply only to cell sizes available with 8 inch and wider block units. This method is subject to approval of DSA.

B. Provide bond beam units, inverted for start course, and omit alternate blocks or cut openings in alternate face shell on bottom course for cleanouts.

C. Remove projecting mortar fins. Wash out every cell thoroughly using a water jet, which has sufficient force to remove mortar from the interior of the cells, and from reinforcing steel.

D. Plug each cleanout by setting a "soap" in mortar into opening and securely bracing it in place to prevent displacement. If masonry is not exposed in finish Work, cleanouts may be formed.

E. Grouting:

1. Grout masonry cells solid, free from voids.

2. Do not install grout until masonry has set a minimum of 3 days in warm weather (50 degrees to 85 degrees F.) or 5 days in cool, damp weather (35 degrees to 50 degrees F.).

3. Pump grout into grout cell space as rapidly as practical. Discard grout not in place within one hour after water was first added to batch.

4. Install grout with maximum slump without segregation. Place in a continuous pour, in maximum lifts of 4 feet, with approximately 20 minutes elapsed time between any 2 successive lifts.

F. Consolidating:

1. Consolidate and reconsolidate grout using 3/4 inch lightweight flexible cable vibrators.

2. First consolidation shall be performed to bottom of lift immediately after placement, and in case of subsequent lifts, through previously placed lift.

3. Top lift shall be reconsolidated no sooner than 30 minutes after grout has been installed.

4. Vibrating of reinforcing steel is not permitted.

G. Bracing: Adequately brace walls against wind and other forces during and after construction.

3.6 CURING

A. Remove efflorescence, stains, debris, excess grout, and foreign matter.

B. During curing, or for any other purpose, do not saturate masonry with water.

C. For low-humidity conditions, dampen the wall surface with a very light fog spray continuously for 3 days to cure mortar in joints.

3.7 PARGE COAT

A. Apply parge coat to the earth side of surfaces that are to receive waterproofing.

B. A Portland cement and sand mix (1:3.5 by volume), or Type M or S mortar may be used for the parge coat.

C. Parging should be applied to damp (not saturated) concrete masonry in two ¼" (6mm) thick layers. The first coat should be roughened when partially set, hardened for 24 hours, and then moistened before second coat is applied. The second coat should be trowelled to a smooth, dense surface.

D. The parge coat should be beveled at the top to form a wash, and thickened at the bottom to form a cove between the base of the wall and the top of footing.

3.8 CLEANING

A. At completion of masonry Work, remove misplaced mortar, grout or other foreign substances, and clean surfaces which will be exposed in finish Work with specified cleaner, or with clean water and stiff fiber brushes.

B. Remove rubbish, debris, and waste materials and legally dispose of off the Project site.

3.9 PROTECTION

A. Protect the Work of this section until Substantial Completion.

END OF SECTION

DIVISION 05

METALS

SECTION 05 05 12
HOT-DIP GALVANIZING

PART 1 - GENERAL

1.01 SUMMARY

A. Section Includes:
   1. Hot-dip galvanizing.
   2. Surface preparation.
   3. Repair materials.
   4. Supplementary components and accessories normally furnished or necessary for complete galvanizing, whether or not such items are indicated on the Drawings or included in the Specifications.

B. Related Requirements:
   1. Section 05 50 00 for galvanized item design standards.

1.02 SECTION REQUIREMENTS

A. Qualifications:
   1. Galvanizer: Company or individuals must have at least 5 years' experience galvanizing items for at least 30 previous projects similar to this project in size, material, design, and complexity.
   2. Supervisors: Individuals must have at least 7 years' experience galvanizing items for at least 30 previous projects similar to this project in size, material, design, and complexity, including at least 2 years' supervisory experience directing and leading galvanizers.

B. Submittals: Galvanizing schedule, galvanizing certificates, and written descriptions of specified qualifications.

PART 2 - PRODUCTS

2.01 HOT-DIP GALVANIZING

A. Description: Zinc galvanic coatings applied in the shop or factory.

B. Application: Applied to iron and steel items
   1. in concrete or masonry installations;
   2. at exterior locations completely or partially exposed to weather, humidity, moisture, or precipitation, except where high performance coatings are indicated; and
   3. elsewhere, where indicated.

C. Materials:
   1. Zinc: ASTM B 6, HG (High Grade) or better (at least 99.95 percent pure zinc).
   2. Bath Composition: ASTM A 123.

D. Accessories: Provide accessories and secondary items normally furnished or necessary for complete galvanizing; or supplied, required, recommended, or accepted by the fabricator or galvanizer for actual in-service conditions applicable to the project.

2.02 SURFACE PREPARATION:

A. Remove oils, organic materials, mill primers, paints, crayon marks, grease- or oil-based marks, and similar materials from metal surfaces prior to starting galvanizing operations. Where permanent identification of a galvanized item is required, provide stamped or seep stencil markings.

B. Blast-clean and flux (recommended method of processing high strength steels for galvanizing to avoid hydrogen embrittlement); or pre-clean with alkaline cleaner, and then acid pickle and flux.

2.03 FINISHES

A. Exposed Natural Finish Items: Furnish galvanized items with a bright regular spangle (recognized, faceted, metallic surface appearance) finish.

B. Painted Finish Items: Furnish galvanized items with a minimized spangle (good surface for paint application when minimal spangle show-through is desired).

2.04 REPAIR MATERIALS

A. Galvanizing Repair Solder:
   1. Description: Lead-free, high zinc content solder formulated specifically for repairs to zinc coatings.
   2. Applications: Used for

      a. shop repair or restoration of small defects in the surfaces of freshly galvanized items directly out of the kettle;

      b. field repair or restoration of damaged zinc coatings caused by welding, brazing, cutting with an oxy-acetylene torch, and similar activities.

      c. field repair or restoration of zinc coatings on exposed-in-service HDG surfaces indicated as retaining a natural zinc finish, when accepted in writing by the Architect, and
   3. Products: Provide one of the following, or equal.

      a. “All-State Galvover” manufactured by ESAB.

      b. “Galvanite” manufactured by Kapp Alloy & Wire, Inc.

      c. “Zaclon Alloy Repair Rod” manufactured by Zaclon, Inc.

B. Cold Galvanizing Repair Compound:
   1. Description: At least 95-percent pure zinc and epoxy resin-based galvanizing repair material.
   2. Applications: Used for the repair or restoration of damaged zinc coatings on exposed-in-service HDG surfaces indicated as retaining a natural zinc finish.
   3. Restrictions: May be used to repair damaged zinc coatings on exposed-in-service HDG surfaces only after accepted in writing by the Architect,
   4. Products: Provide one of the following, or equal.

      a. “Devcon Z” manufactured by ITW Devcon.

      b. “Zinc Clad Cold Galvanizing” manufactured by The Sherwin Williams Co.

      c. “ZRC Galvilite” manufactured by ZRC Worldwide.

C. Galvanizing Repair Paint:

1. Description: Zinc-rich organic primer conforming to SSPC-Paint 20 Type II (Organic) zinc-rich primers and AISC requirements for Class B surface slip coefficient rating (minimum mean slip coefficient of at least 0.50).
2. Applications: Used for the repair or restoration of damaged zinc coatings on concealed -in-service HDG surfaces indicated as receiving a painted finish.
3. Product: Provide one of the following, or equal.

    a. “Carbozinc 859, Color 0300” (green) manufactured by the Carboline Co.

    b. “Amercoat 68HS” (reddish-gray) manufactured by PPG Industries, Inc.

    c. “Tneme-Zinc Series 90-97” (reddish-gray) manufactured by the Tnemec Co.
4. Requisite Properties:

    a. Thickness: Apply to a DFT of at least 3 plus or minus 0.5 mils per coat, when measured in conformance with SSPC-PA 2. Provide at least 2 coats.

    b. Color: Reddish-gray or other standard color furnished by the primer manufacturer.
5. Performance Requirements:

    a. Zinc Dust Pigment: ASTM D 520 Type III composition classification (maximum 0.002 percent lead).

    b. Minimum Dry Film Adhesion: At least 800 psi pull, when tested in conformance with ASTM D 4541.

    c. Minimum Humidity Resistance: No blistering, cracking, rusting, or film delamination after at least 1,000 hours exposure, when tested in conformance with ASTM D 4585.

    d. Minimum Salt Spray Resistance: No blistering, cracking, rusting, or film delamination nor more than 1/32-inch rust creep at scribe after at least 10,000 hours exposure, when tested in conformance with ASTM B 117.

2.05 SOURCE QUALITY CONTROL

A. Tests and Inspections:

1. Perform thickness testing and inspection of zinc coatings in conformance with the guidelines outlined in AGA publication “*The Inspection of Products Hot-Dip Galvanized after Fabrication*” and ASTM A 123.
2. Determine whether zinc coating thicknesses conform to specified minimum thicknesses by taking measurements using a magnetic, electromagnetic, or eddy-current gauge in conformance with ASTM E 376.
3. Record results on galvanizing schedule.
4. Re-galvanize non-conforming work.

PART 3 - EXECUTION

3.01 INSTALLATION REQUIREMENTS

A. General:

1. Ensure proper supervision practices are followed at the project site before the installer begins work and at all times during installation.

B. Galvanizing: Galvanize items in conformance with ASTM A 123. Plug vent holes with silicone sealant after galvanizing.
   1. Coating Thickness: Produce a continuous and fully-adhering zinc coating that is reasonably smooth.
   2. Coating Appearance: Galvanized items must be smooth and free from uncoated areas, pits, craters, blisters, flux deposits, dross inclusions, and other types of projections that would interfere with the intended use of the articles, or similar defects.

C. Special Techniques: Galvanize castings; rolled, pressed, and forged items; and hardware items, including bolts, nuts, washers, and similar threaded fasteners, in conformance with ASTM A 153.
   1. Coating Thickness: Zinc coating must have uniform thickness. Coating thickness must conform to the minimum thickness requirements indicated in ASTM A 153 Table 1, based on the material category and thickness of material each item belongs.
   2. Coating Appearance: Galvanized items must be smooth and free from uncoated areas, pits, craters, blisters, flux deposits, dross inclusions, and other types of projections that would interfere with the intended use of the articles, or similar defects.

D. Quenching Painted Finish Items:
   1. Do not water-quench galvanized items painted after galvanizing (doing so may leave residue on surfaces that cause paint adhesion problems or require added surface preparation prior to painting).
   2. Do not chromate-quench galvanized items painted after galvanizing (hexavalent chromium is often used as a wet-storage stain inhibitor; chromate interferes with paint adhesion).
   3. Do not phosphate-quench galvanized items coated with a zinc-rich paint after galvanizing (doing so reduces the electrical conductivity of the paint).

E. Quenching Natural Finish Items (zinc finish without added paint or other coatings): If required to prevent wet storage stain, quench freshly-galvanized steel in a passivating solution.

F. Correction and Repair:
   1. Correct deficiencies that do not conform to the Contract Documents.
   2. Repair non-conforming, damaged, and defective work.

G. Protection:
   1. Protect installed galvanizing in place from soiling, deterioration, and damage until Substantial Completion.
   2. Remove protection when it’s no longer needed and before Substantial Completion.

END OF SECTION

©AWCWEST 18E22 All rights reserved.
TAGDSC, ELMTB, B1080, B2080, B3020

SECTION 05 05 13
SHOP-APPLIED STEEL PRIMER

PART 1 - GENERAL

1.01 SUMMARY

A. Section Includes:
   1. Shop-applied steel primer.
   2. Repair materials.
   3. Surface preparation.
   4. Supplementary components and accessories normally furnished or necessary for a complete installation, whether or not such items are indicated on the Drawings or included in the Specifications.

B. Related Requirements:
   1. Section 09 91 00 for painting steel surfaces installed in SSPC Environmental Zones 0 and 1A, including field-applied primers and spot primers.
   2. Section 09 97 13 for high performance steel coatings applied to steel surfaces installed in SSPC Environmental Zones 1B, 2A, and 2B.

1.02 SECTION REQUIREMENTS

A. Qualifications:
   1. Installer: Company or individuals must have at least 5 years' experience installing primer for at least 30 previous projects similar to this project in size, material, design, and complexity. Only a company certified by the AISC as having a current P3-Sophisticated Painting Endorsement (SPE) certification may apply shop primers.
   2. Supervisors: Individuals must have at least 7 years' experience installing primer for at least 30 previous projects similar to this project in size, material, design, and complexity, including at least 2 years' supervisory experience directing and leading primer installers.

B. Submittals: Submit product data, primer schedule, and written descriptions of specified qualifications.

PART 2 - PRODUCTS

2.01 MANUFACTURERS

A. Manufacturers: Provide products manufactured by one of the following, or equal.
   1. Carboline Co.
   2. PPG Industries, Inc.
   3. Tnemec Co.

2.02 SHOP APPLIED STEEL PRIMER

A. Acrylic Primer:
   1. Description: Hydrophobic acrylic dry-fall high performance coating primer
   2. Application: Applied to interior exposed-in-service steel surfaces.

3. Product: “Uni-Bond DF Series 115” manufactured by the Tnemec Co., or equal.
4. Requisite Properties:

    a. Minimum Thickness: Between 2.0 and 3.5 mils DFT per coat, when measured in conformance with SSPC paint application standard SSPC-PA2, “*Measurement of Dry Coating Thickness with Magnetic Gages*”.

    b. Color: Match Tnemec color 10-1009, “Gray”.
5. Performance Requirements:

    a. Minimum Dry Film Adhesion: At least a 5B rating, when tested in conformance with ASTM D 3359.

    b. Minimum Humidity Resistance: No blistering, cracking, rusting, or delaminating of film after at least 500 hours exposure, when tested in conformance with ASTM D 4585.

    c. Minimum Salt Spray Resistance: No blistering, cracking, rusting, or delaminating of film and no rust creep at scribe after at least 500 hours exposure, when tested in conformance with ASTM B 117.

    d. Minimum Slip Coefficient Rating: At least 0.50 (AISC Class B surface), when tested in conformance with ASTM A 490.

B. Zinc-Rich Primer:
1. Description: Zinc-rich high-performance coating primer.
2. Application: Applied exterior exposed-in-service steel surfaces.
3. Product: “Tneme-Zinc Series 90-97” manufactured by the Tnemec Co., or equal.
4. Requisite Properties:

    a. Minimum Thickness: Between 2.0 and 3.5 mils DFT per coat, when measured in conformance with SSPC paint application standard SSPC-PA2, “*Measurement of Dry Coating Thickness with Magnetic Gages*”.

    b. Color: Reddish-gray or other standard color.

    c. Zinc Dust Pigment: ASTM D 520 Type III composition classification (not more than 0.002 percent lead).
5. Performance Requirements:

    a. Minimum Dry Film Adhesion: At least 800 pounds per square inch pull, when tested in conformance with ASTM D 4541.

    b. Minimum Humidity Resistance: No blistering, cracking, rusting, or delaminating of film after at least 1,000 hours exposure, when tested in conformance with ASTM D 4585.

    c. Minimum Salt Spray Resistance: No blistering, cracking, rusting, or delaminating of film, and not more than 1/32-inch rust creep at scribe after at least 10,000 hours exposure, when tested in conformance with ASTM B 117.

    d. Minimum Slip Coefficient Rating: At least 0.50 (AISC Class B surface), when tested in conformance with ASTM A 490.

2.03 REPAIR MATERIALS

A. Acrylic Spot Primer:

1. Description: Hydrophobic acrylic dry-fall high performance coating primer
2. Application: Applied to interior exposed-in-service steel surfaces.
3. Product: “Uni-Bond DF Series 115” manufactured by the Tnemec Co., or equal.
4. Requisite Properties:

    a. Minimum Thickness: Between 2.0 and 3.5 mils DFT per coat, when measured in conformance with SSPC paint application standard SSPC-PA2, “*Measurement of Dry Coating Thickness with Magnetic Gages*”.

    b. Color: Match Tnemec color 00WH, “Tnemec White”.
5. Performance Requirements:

    a. Minimum Dry Film Adhesion: At least a 5B rating, when tested in conformance with ASTM D 3359.

    b. Minimum Humidity Resistance: No blistering, cracking, rusting, or delaminating of film after at least 500 hours exposure, when tested in conformance with ASTM D 4585.

    c. Minimum Salt Spray Resistance: No blistering, cracking, rusting, or delaminating of film and no rust creep at scribe after at least 500 hours exposure, when tested in conformance with ASTM B 117.

    d. Minimum Slip Coefficient Rating: At least 0.50 (AISC Class B surface), when tested in conformance with ASTM A 490.

B. Zinc-Rich Spot Primer:
1. Description: Zinc-rich aromatic urethane organic primer.
2. Application: Field-applied to repair damaged shop-applied zinc-rich primer.
3. Product: “Hydro-Zinc 94-H20” manufactured by the Tnemec Co., or equal.
4. Requisite Properties:

    a. Minimum Thickness: Between 2.5 and 3.5 mils DFT per coat, when measured in conformance with SSPC paint application standard SSPC-PA2, “*Measurement of Dry Coating Thickness with Magnetic Gages*”.

    b. Color: Greenish-gray or other standard color.

    c. Zinc Dust Pigment: ASTM D 520 Type III composition classification (not more than 0.002 percent lead).
5. Performance Requirements:

    a. Minimum Dry Film Adhesion: At least 800 pounds per square inch pull, when tested in conformance with ASTM D 4541.

    b. Minimum Humidity Resistance: No blistering, cracking, rusting, or delaminating of film after at least 1,000 hours exposure, when tested in conformance with ASTM D 4585.

    c. Minimum Salt Spray Resistance: No blistering, cracking, rusting, or delaminating of film, and not more than 1/32-inch rust creep at scribe after at least 10,000 hours exposure, when tested in conformance with ASTM B 117.

    d. Minimum Slip Coefficient Rating: At least 0.50 (AISC Class B surface), when tested in conformance with ASTM A 490.

C. Other Spot Primers: Provide spot primer identical to shop-applied primer originally used to prime surfaces.

2.04 SURFACE PREPARATION

A. Concealed and Interior Exposures:
   1. Application: Applied to steel items installed in SSPC Environmental Zones 0 and 1A (concealed and interior service conditions not subject to wetting).
   2. Surface Preparation: Prepare surfaces in conformance with manufacturer-prepared published and supplemental instructions, and SSPC surface preparation standard SSPC-SP3, "*Power Tool Cleaning*".

B. Exterior Moderate Exposures:
   1. Application: Applied to steel items installed in SSPC Environmental Zones 1B and 2A (moderate exterior service conditions).
   2. Surface Preparation: Prepare surfaces in conformance with manufacturer-prepared published and supplemental instructions, and SSPC surface preparation standard SSPC-SP6/NACE 3, "*Commercial Blast Cleaning*" to a minimum surface profile of at least 1.5 mils, when measured in conformance with ASTM D 4417 Method B (Surface Profile Depth Micrometer).

C. Exterior Severe Exposures and Immersion Service:
   1. Application: Applied to steel items installed in SSPC Environmental Zone 2B (severe exterior service conditions), Zone 2C (fresh water immersion conditions), and Zone 2D (salt water immersion conditions).
   2. Surface Preparation: Prepare surfaces in conformance with manufacturer-prepared published and supplemental instructions, and SSPC surface preparation standard SSPC-SP10/NACE 2, "*Near-White Blast Cleaning*" to a minimum surface profile of at least 2.0 mils, when measured in conformance with ASTM D 4417 Method B (Surface Profile Depth Micrometer).

D. Unknown or Incompatible Primers:
   1. Application: Use when unknown shop- or factory-applied primers are discovered; or when high-performance steel primers are chemically or adhesively incompatible with shop- or factory-applied primers.
   2. Surface Preparation: Apply specified spot primer as a full prime coat on all surfaces as a tie-coat for subsequent intermediate and top coats.

2.05 ACCESSORIES

A. Flash Rust Inhibitor/Salt Remover:
   1. Description: Blast and wash down-water additive that prevents flash rusting of wet abrasive and water-blasted ferrous metal surfaces; and of dry-blasted surfaces in a pressurized wash down.
   2. Product: "HoldTight 102" manufactured by HoldTight Solutions Inc., or equal.

B. Other Accessories: Provide accessories and secondary items normally furnished or necessary for a complete installation; or supplied, required, recommended, or accepted by the manufacturer for actual in-service conditions applicable to the project.

PART 3 - EXECUTION

3.01 INSTALLATION REQUIREMENTS

A. General:
   1. Ensure proper supervision practices are followed before the installer begins work and at all times during installation.
   2. Verify surfaces conform to the manufacturer's requirements or recommendations, and satisfies all other conditions that might affect the quality of installation or the durability or performance of installed and adjacent items.
   3. Prepare surfaces as required, recommended, or accepted by the manufacturer without limitation; and in a manner that does not result in any warranty or guarantee becoming void.
   4. Install primer using materials and methods required, recommended, or accepted by the manufacturer, along with manufacturer-recommended accessories and techniques.

B. Special Techniques:
   1. To avoid surface contaminant pick-up, promptly prime prepared surfaces as soon as practicable after and within the same day as surface preparation.
   2. Clean and prepare damaged primed surfaces in conformance with manufacturer's published instructions and SSPC surface preparation standard SSPC-SP11 "*Power Tool Cleaning to Bare Metal*".
   3. Sand smooth and re-clean.
   4. Spot-prime bare metal surfaces with specified primer applied to a total spot primer DFT of at least 5 mils.
   5. Overlap undamaged primer areas with spot primer at least 2 inches.

C. Correction and Repair:
   1. Correct deficiencies that do not conform to the Contract Documents.
   2. Repair non-conforming, damaged, and defective work.
   3. Re-prime damaged items that cannot be repaired to the same condition as new.
   4. Installed primer must be warrantable. Do not install, correct, or replace primer in a manner that is un-warrantable by the manufacturer or that results in any warranty or guarantee becoming void.

D. Protection:
   1. Protect installed primer from deterioration and damage until coating or covering primed surfaces.
   2. Remove protection when it's no longer needed and before coating or covering primed surfaces.

END OF SECTION

©AWCWEST 18E22 All rights reserved.
RSTLNE, TAGDSC, ELMTB, CLSB1010, CLSB1020, CLSB1080, CLSB2010, CLSB2080, CLSB3020

SECTION 05 05 23
METAL FASTENINGS

PART 1 - GENERAL

1.01 SUMMARY

A. Section Includes:
1. Fastening materials.
2. Cast-in-place anchors.
3. Post-installed anchors.
4. Non-structural mechanical fasteners.
5. Site tests and inspections.
6. Supplementary components and accessories normally furnished or necessary for a complete installation, whether or not such items are indicated on the Drawings or included in the Specifications.

B. Related Requirements:
1. Section 06 10 53 for metal fastenings used to fasten wood items together and to join wood items to other materials.
2. Additional fastening requirements specific to a work result are specified within the applicable specification sections.

1.02 SECTION REQUIREMENTS

A. Submittals: Submit product data and samples.

PART 2 - PRODUCTS

2.01 FASTENER MATERIALS

A. Soldering Materials:
1. HDG Sheet Metal Solder and Flux: 50-percent tin solder conforming to ASTM B 32 Grade Sn50 and used with a non-corrosive flux.
2. Stainless Steel Sheet Metal Solder and Flux: 60-percent tin solder conforming to ASTM B 32 Grade Sn60 and used with an acid flux.

B. Welding Materials:
1. Electrodes: Provide electrodes appropriate for the type and grade of metal being welded and the conditions of installation, use, and service. Welding rods and bare electrodes must conform to AWS specifications based on

a. physical properties of weld metal;

b. type of coating on electrode;

c. welding position of electrode; and

d. type of welding current used with electrode.

2. Filler Metal: Provide filler metal and electrode type and alloy recommended or accepted by the producer of the metal being welded, and as required for strength, corrosion resistance, and compatibility with fabricated items under the conditions of installation and service.

C. Uncoated Carbon Steel Fastener Material:
1. Screws: Manufactured from carbon steel wire rods and uncoated coarse round wire conforming to ASTM A 510, Grades 1018 to 1022.
2. Bolts: ASTM A 307, Grade A.
3. Nuts and Flat Washers: ASTM A 563, Grade C3.

D. Uncoated Stainless Steel Fastener Material:
1. Description: Austenitic stainless-steel screws, bolts, and studs conforming to ASTM F 593 and nuts conforming to ASTM F 594 requirements for Alloy Group 1 (304 Series) or Alloy Group 2 (316 Series).
2. Performance Requirements:

a. Type 304: No sign of surface red rust after at least 1,000 hours of ASTM B 117 salt spray test performed on screws after being driven through and removed from sheet metal panels.

b. Type 316: No sign of surface red rust after at least 1,500 hours of ASTM B 117 salt spray test performed on screws after being driven through and removed from sheet metal panels.

E. Uncoated Nonferrous Metal Fastener Material:
1. Copper, brass, bronze, nickel, aluminum, and titanium nuts conforming to ASTM F 467 and commercial wrought bolts, hex cap screws, and studs conforming to ASTM F 468.
2. Provide alloy and temper suitable for the intended use and in-service loads, environmental exposure, and other conditions as required, recommended, or accepted by the manufacturer.

F. Uncoated Bi-Metal Fastener Material:
1. Description: Fasteners having a fused stainless steel head and shank and hardened steel drill point.
2. Product: “Bi-Flex” fasteners manufactured by Elco Construction Products, or equal.
3. Performance Requirements: No sign of surface red rust after at least 800 hours of ASTM B 117 salt spray test performed on screws after being driven through and removed from sheet metal panels.

G. Coated and Plated Fastener Material:
1. Corrosion protective fastener coatings and platings must be deposited in conformance with the following.

a. Phosphate/Oil and Phosphate/Organic Coatings: ASTM F 1137.

b. Electrodeposited Coatings on Threaded Fasteners: ASTM F 1941.
2. To verify the prevention of internal hydrogen embrittlement (IHE) in steel fasteners during surface preparation, pretreatment, and plating or coating, all plating or coating processes must be periodically audited in conformance with ASTM F 1940. New or revised plating or coating processes must also be qualified by ASTM F 1940.
3. Plated fasteners with a hardness value of Rockwell 32 and higher must be baked promptly after plating at between 375 and 400 deg. F for at least 3 to 24 hours (depending on plating type and thickness) to neutralize hydrogen embrittlement. Baking must occur before chromating, and before application of subsequent coatings.

H. HDG Steel Fastener Material:

1. Description: HDG carbon steel fasteners having zinc coating conforming to

    a. ASTM A 153 minimum coating weight requirements for Class C materials (fasteners over 3⁄8-inch diameter and similar articles; washers 3⁄16-inch and 1⁄4-inch thick) or Class D materials (fasteners 3⁄8-inch diameter and under, rivets, nails, and similar articles; washers under 3⁄16-inch thick); and

    b. ASTM F 2329 for coating of threaded fasteners and washers.
2. Performance Requirements: No sign of surface red rust after at least 32 hours of ASTM B 117 salt spray test performed on screws after being driven through and removed from sheet metal panels.

I. Zinc-Plated Steel Fastener Material:
1. Description: Carbon steel fasteners having electrodeposited zinc coating conforming to ASTM B 633, thickness Class Fe/Zn 5, Type I finish.(as-plated without supplementary treatment)
2. Requisite Properties:

    a. Sacrificial Coating: 5- to 8-micron (0.0002- to 0.0003-inch) electrolytically-deposited zinc plating.

    b. Passivate: None.
3. Performance Requirements: No sign of surface red rust after at least 32 hours of ASTM B 117 salt spray test performed on screws after being driven through and removed from sheet metal panels.

J. Clear Chromate Finish Zinc-Plated Steel Fastener Material:
1. Description: Carbon steel fasteners having electrodeposited zinc coating conforming to ASTM B 633, Thickness Class Fe/Zn 8, Type III supplementary finish. (clear chromate conversion coating)
2. Requisite Properties:

    a. Sacrificial Coating: 8- to 12-micron (0.0003- to 0.0005-inch) electrolytically deposited zinc plating.

    b. Passivate: Restriction of Hazardous Substances Directive (RoHS)-compliant clear trivalent chromate conversion coating. Hexavalent chromium conversion coatings are prohibited.
3. Performance Requirements: No sign of surface red rust after at least 48 hours of ASTM B 117 salt spray test performed on screws after being driven through and removed from sheet metal panels.

K. Pigmented Chromate Finish Zinc-Plated Steel Fastener Material:
1. Description: Carbon steel fasteners having electrodeposited zinc coating conforming to ASTM B 633, Thickness Class Fe/Zn 25, Type II supplementary finish (color chromate conversion coating).
2. Requisite Properties:

    a. Sacrificial Coating: At least a 25-micron (0.00098-inch) electrolytically deposited zinc plating.

    b. Passivate: Restriction of Hazardous Substances Directive (RoHS)-compliant trivalent chromate conversion coating having a green dye added to the clear tri-chrome bath or applied following the clear dip. Hexavalent chromium conversion coatings are prohibited.

3. Performance Requirements: No sign of surface red rust after at least 48 hours of ASTM B 117 salt spray test performed on screws after being driven through and removed from sheet metal panels.

L. Phosphate Coated Steel Fastener Material:
1. Description: Carbon steel fasteners having corrosion-resistant zinc phosphate coating applied by the immersion bath method.
2. Performance Requirements: No sign of surface red rust after at least 240 hours of ASTM B 117 salt spray test performed on screws after being driven through and removed from sheet metal panels.

M. Polymer-Coated Steel Fastener Material:
1. Description: Carbon steel fasteners having a fluoropolymer or Xylan coating that provides barrier protection against galvanic action.
2. Barrier Coating: At least a 25-micron (0.00098-inch) electrolytically deposited zinc plating.
3. Performance Requirements: No sign of surface red rust after at least 500 hours of ASTM B 117 salt spray test performed on screws after being driven through and removed from sheet metal panels.

N. Baked Inorganic-Coated Steel Fastener Material (e.g., Geomet, Dacromet, or equal):
1. Description: Carbon steel fasteners having a VOC-compliant, water-based, non-chrome (NC), nickel-, cadmium-, lead-, barium-, and mercury-free dispersion coating conforming to ASTM F 1136 containing metal oxides, metallic zinc, and aluminum flakes that becomes inorganic after curing.
2. Barrier Coating: At least an 8-micron (0.00098-inch) dip-spin and convection oven-cured coating.
3. Performance Requirements: No sign of surface red rust after at least 500 hours of ASTM B 117 salt spray test performed on screws after being driven through and removed from sheet metal panels.

O. Duplex Coated Anti-Corrosive Steel Fastener Material:
1. Description: Carbon steel fasteners having a 2-coat finish that combines the sacrificial protection of steel base metal with the barrier protection of a polymer topcoat.
2. Requisite Properties:

    a. Basecoat: Inorganic zinc-rich coating.

    b. Topcoat: Aluminum-rich, thermosetting epoxy resin (e.g., Magnigard, or equal); polyester resin (e.g., Climaseal, or equal); or fluoropolymer resin (e.g., Stalgard, FluoroKote#1, or equal).
3. Performance Requirements: No sign of surface red rust after at least 800 hours of ASTM B 117 salt spray test performed on screws after being driven through and removed from sheet metal panels.

P. 3-Coat Anti-Corrosive Steel Fastener Material:
1. Description: Carbon steel fasteners having a 3-coat finish that combines the sacrificial protection of steel base metal with the barrier protection of a polymer topcoat.
2. Requisite Properties:

    a. Basecoat: Mechanically deposited zinc-alloy coating (coating is applied by mechanically tumbling zinc and tin powder with the base metal and non-metallic impact beads).

    b. Intermediate Coat: Chromate conversion coating.

    c. Topcoat: Aluminum-filled thermosetting polyester resin.

3. Performance Requirements: No sign of surface red rust after at least 800 hours of ASTM B 117 salt spray test performed on screws after being driven through and removed from sheet metal panels.

Q. Ceramic-Coated Anti-Corrosive Steel Fastener Material:
1. Description: Carbon steel fasteners having 3-coat finish that provides electrolytic corrosion protection by combining the sacrificial protection of zinc with the barrier protection of a ceramic topcoat, and having a current evaluation report from the ICC-ES demonstrating code compliance.
2. Application: Use ceramic-coated anti-corrosive steel fasteners

a. with pressure treated wood, including alkaline copper quaternary (ACQ), ammoniacal copper arsenate (ACA), chromated copper arsenate (CCA), ammoniacal copper zinc arsenate (ACZA), copper azole (CBA-A and CA-B), copper citrate (CC), and disodium octaborate tetrahydrate (DOT);

b. when attaching to exotic hardwood lumber base material;

c. with composite lumber; and

d. when attaching cement board, high-density exterior sheathing, and tile backer board to framing members at exterior walls, at high-moisture interior walls, and in high-corrosion environments.

3. Product: “Grabber” screws manufactured by Grabber Construction Products, or equal.
4. Requisite Properties:

a. Basecoat An 8- to 10-micron (0.0003- to 0.0004-inch) mechanically deposited zinc-alloy coating.

b. Intermediate Coat: Chromate conversion coating.

c. Topcoat: Corrosion-resistant baked ceramic surface coating.

5. Performance Requirements: No sign of surface red rust after at least 1,000 hours of ASTM B 117 salt spray test performed on screws after being driven through and removed from sheet metal panels.

2.02 CAST-IN-PLACE ANCHORS

A. Description: Threaded steel anchor bolts (anchor rods) with hot-dip zinc coating conforming to ASTM F 1554 Grade 36 or weldable Grade 55, having Class 2A threads before zinc coating (non-headed anchor bolts, either bent or straight, having properties conforming to ASTM A 36, tensile strength of between 58 and 80 ksi, and intended for structural anchorage purposes) with hex-head nuts and flat washers conforming to ASTM A 563 chemical requirements for Grade A nuts.

B. Requisite Properties:
1. Size: Provide bolt or stud sizes required by engineering calculations for type of use indicated (between 1/4-inch and 4 inches).
2. Coating: Hot-dip galvanize anchors, nuts, and washers in conformance with ASTM A 153 minimum zinc coating weight requirements for Class C materials.

2.03 POST-INSTALLED ANCHORS

A. Description: ICC-ES-approved anchors conforming to California Building Code Category 1, Seismic Zones A-F.

B. Manufacturer: Provide products manufactured by Hilti, Inc., or equal.

C. Torque-Controlled Expansion Anchors:
   1. Description: Anchors actuated by tightening a bolt or nut. Expansion anchors installed in concrete must further conform to the requirements of ACI 355.2, Commercial Item Description A-A-1923A Type 4, and ACI-318 Appendix D.
   2. Product: “KB-TZ SS304” manufactured by Hilti, Inc. (ICC-ES Report ESR-1917), or equal.
   3. Performance Requirements: Expansion anchors must be rated to sustain without failure a load equal to at least 4 times the design load when installed in concrete; and at least 6 times the design load when installed in unit masonry, when tested in conformance with ASTM E 488.

D. Displacement-Controlled Expansion Anchors (Drop-In Anchors): Prohibited.

E. Power-Actuated Fasteners:
   1. Description: Provide powder-actuated, pneumatic, or gas-powered direct fastening system for driving fasteners into concrete, CMU, and steel.
   2. Restrictions:

      a. Power actuated-fasteners may not be used in concrete for sustained tension loads or for brace applications unless explicitly designed for seismic loading; except when used for support of acoustical tile or lay-in panel suspended ceiling applications and distributed systems where the service load on any individual fastener 90 pounds or less.

      b. Power actuated fasteners may not be used in CMU unless explicitly designed for seismic loading.

      c. Power actuated-fasteners may not be used in steel for sustained tension loads or for brace applications unless explicitly designed for seismic loading; except where the service load on any individual fastener is 250 pounds or less.

2.04 MECHANICAL FASTENERS

A. Manufacturers: Provide products manufactured by one of the following, or equal.
   1. Elco. (ICC-ES Report No. ESR-3332)
   2. Grabber Construction Products. (ICC-ES Report No. ESR-5280)
   3. Hilti, Inc. (ICC-ES Report No. ESR-2196)
   4. ITW Buildex. (ICC-ES Report No. ESR-3270)
   5. PrimeSource Building Products, Inc. (ICC-ES Report No. ESR-1408)

B. Screw Fasteners:
   1. Application: Used for attaching to cold-formed or lightgage steel framing.

      a. Fastening Together Cold-Formed or Lightgage Steel Members: ASTM C 1513.

      b. Fastening Gypsum Panel Products, Metal Plaster Bases, Cementitious Backing Board and Cement Board to Cold-Formed Metal Framing: ASTM C 954.

      c. Fastening Gypsum Panel Products and Metal Plaster Bases to Lightgage Metal Framing: ASTM C 1002, Type S.

      d. Fastening Gypsum Panel Products and Metal Plaster Bases to Lightgage Metal Framing: ASTM C 1002, Type G.
   2. Requisite Properties:

a. Length: Screw fasteners must penetrate through metal framing with not less than 3 exposed threads below the substrate.

b. Head Style:

1) Provide wafer head screws when fastening together metal framing members and when fastening metal plaster bases to metal framing.

2) Provide bugle head screws when fastening gypsum panels to metal framing.

3) Provide hex washer head screws with ethylene propylene diene monomer (EPDM) bonded sealing washers when fastening sheet metal panels, siding, roofing, flashings and similar items to metal framing. Provide exposed fastener heads with factory-applied coating matching prefinished roof or wall panel color.

4) Fasteners not indicated to be overlaid either with gypsum panels or other substrates or finish materials may have hex washer, pan, pancake, modified truss, or pan framing head types.

c. Drive Style: #2 Phillips drive.

d. Point Style:

1) Attaching Cement Board: Hi-Lo type point.

2) Attaching Sheet Metal and Lightgage Metal Framing (Up to 30 mils and Thinner): Self-piercing point.

3) Attaching Sheet Metal and Cold-Formed Metal Framing (At Least 33 mils and Thicker): For normal, single-thickness material and multiple material thickness combined for total of between

a) 0.035- and 0.110-inch thick: Provide #2 self-drilling point.

b) 0.100- and 0.220-inch thick: Provide #3 self-drilling point.

c) 0.175- and 0.250-inch thick: Provide #4 self-drilling point.

d) 0.250- and 0.375-inch thick: Provide #5 self-drilling point.

C. Bolts and Nuts:

1. Description: Regular bolts with hex-head nuts and flat washers.
2. Requisite Properties:

a. Fastener Size: Unless otherwise indicated, provide at least 3/4-10 coarse thread bolts or studs in lengths required to provide a minimum thread engagement equal to the thread diameter, with at least one clear thread plus the thread lead (start) above the nut face, and at least one clear thread plus the thread run out beneath the nut face after tightening. Assume one washer will be used under the rotating part (generally the nut) and allow for this when selecting the bolt length.

b. Fastener Head Type: Hexagon-head with both the strength and type of steel used in bolt manufacture indicated on the head of the bolt by a raised mark conforming to ASTM bolt designation standards.

2.05 ACCESSORIES

A. Expansion Shields: Die cast zinc alloy or zinc-coated steel single or double expansion shields manufactured for type of screw fastener indicated, specified, or selected. Lead or zinc and lead expansion shields are prohibited.

B. Concrete Patching Mortar: Provide one of the following, or equal.
   1. “EMACO S66 CI” manufactured by BASF.
   2. “SikaRepair 223” manufactured by Sika Corp.

C. Other Accessories: Provide other accessories and secondary items normally furnished or necessary for a complete installation; or supplied, required, recommended, or accepted by the manufacturer for actual in-service conditions applicable to the project.

PART 3 - EXECUTION

3.01 INSTALLATION REQUIREMENTS

A. General:
   1. Ensure proper supervision practices are followed at the project site before the installer begins work and at all times during installation.
   2. Verify in-place supporting and adjacent construction conforms to the manufacturer’s requirements or recommendations, and satisfies all other conditions that might affect the quality of installation or the durability, appearance, or performance of installed and adjacent items.
   3. Install fastenings using materials and methods required, recommended, or accepted by the manufacturer, along with manufacturer-recommended accessories and techniques.
   4. Fasten work tightly to prevent rattle or vibration except where expansion-contraction tolerances are required.

B. Site Tests and Inspections:
   1. General: Include site tests and inspections as part of the work of this specification section. The Owner’s testing and inspection agency performs tests and inspections.
   2. Required Tests: Perform static tension load tests in conformance with ASTM E 488, “*Standard Test Methods for Strength of Anchors in Concrete and Masonry Elements*” on at least 10 percent of each installed anchor diameter or as indicated on the Drawings.

C. Correction and Repair:
   1. Correct deficiencies that do not conform to the Contract Documents.
   2. Repair non-conforming, damaged and defective work.

D. Screw Fastener Special Techniques:
   1. Maintain bit engagement until fastener is completely driven and fastener stops rotating.
   2. Install screws flush with surface; do not countersink or over-drive screw fasteners.

E. Post-Installed Anchor Special Techniques:
   1. Examination: Inspect substrates to verify conditions of access, interference, and existing materials.

      a. Using non-destructive methods, verify locations of reinforcement and post-tensioning tendons in drill locations.

      b. Use care and caution to avoid cutting or damaging reinforcement.

c. Unless otherwise indicated, maintain a clearance of at least 1 inch between tendon sheaths and anchors or dowels.

2. Layout:

a. Locations and Spacing: Indicated on the Drawings.

b. Edge Distance: At least 10 nominal bolt diameters when installed in concrete.

3. Drilling and Preparing Holes:

a. Holes may not be drilled in concrete or into grouted CMU until at least 7 days after concrete is cast or grout is placed; and until concrete or grout achieves its specified design compressive strength.

b. Unless otherwise indicated, holes must be drilled using the manufacturer's recommended drill type, bit, and setting.

c. Hole diameters must conform to manufacturer's instructions; hole depth as indicated on the Drawings.

d. Abandon over-drilled holes and fill with specified patching mortar.

e. Abandon drilled holes and fill with specified patching mortar when hole deviates more than 5 degrees, measured from a line normal to the concrete surface.

f. Promptly notify Architect if concrete reinforcing bars or post-tensioning tendons are encountered during drilling.

g. Dust and other contaminants must be completely removed from holes by blowing with compressed air or other effective methods.

F. Expansion Anchor Special Techniques:

1. Install anchors into pre-drilled and properly-prepared holes in conformance with the manufacturer's installation instructions.
2. Expansion anchor embedment may not be less than required by the manufacturer.

a. Embedment length excludes thickness of finish coverings and other overlays.

b. When installed overhead into concrete slabs through metal decking, embedment must extend within a zone between 1-1/2 inches above top of flute and 3/4-inch below top of concrete.

3. Tighten anchors to the manufacturer-recommended installation torque values.

G. Interface with Adjacent Items: Provide materials, components, and accessories normally furnished or necessary to securely attach fastenings to supporting construction.

H. Installation Tolerances: Install fastenings to an allowable tolerance variation of not more than 1/4-inch from true position and not more than 1/8-inch and from plumb, level, and alignment.

END OF SECTION

©AWCWEST 18E22 All rights reserved.
RSTLNE, TAGDSC, ELMTB, CLSB2010, ELMTC, CLSC1010

SECTION 05 12 00
STRUCTURAL STEEL

PART 1 – GENERAL

1.1 SECTION INCLUDES

A. Structural steel.

B. Architecturally exposed structural steel.

1.2 RELATED SECTIONS (IF SECTION IS NOT AVAILABLE, SEE CONSTRUCTION PLAN)

A. Section 01 45 23 Testing and Inspection.

B. Section 03 30 00 - Cast-In-Place Concrete.

C. Section 04 22 00 - Concrete Unit Masonry.

D. Section 05 30 00 - Metal Decking

E. Section 05 50 00 - Metal Fabrication

F. Section 07 81 00 - Cementitious Fireproofing

G. Section 09 90 00 - Paints and Coatings

1.3 REFERENCES

A. AISC MO15L – Manual of Steel Construction, Allowable Stress Design, 9th edition.

B. AISC S323 – Quality Criteria and Inspection Standards.

C. ASTM A36 – Structural Steel.

D. ASTM A53 – Hot Dipped, Zinc-Coated Welded and Seamless Steel Pipe.

E. ASTM A108 – Steel Bars, Carbon, Cold-Finished, Standard Quality.

F. ASTM A123 – Zinc (Hot Dipped Galvanized) Coatings on Iron and Steel Products.

G. ASTM A153 – Zinc Coating (Hot Dip) on Iron and Steel Hardware.

H. ASTM A307 – Carbon Steel Externally Threaded Standard Fasteners.

I. ASTM A325 – High Strength Bolts for Structural Steel Joints.

J. ASTM A500 – Cold Formed Welded and Seamless Carbon Steel Structural Tubing in Round and Shapes.

K. ASTM A653 – Sheet Steel, Zinc-Coated (Galvanized) or Zinc-Iron Alloy Coated by the Hot-Dip Process.

L. ASTM C1107 – Packaged Dry, Hydraulic Cement Grout (Non-Shrink).

M. AWS A2.4 – Standard Welding Symbols.

N. AWS D1.1 – Structural Welding Code.

O. AWS WHB-1 – Qualification and Certification.

P. AWS A5.1 – Carbon Steel Covered Arc-Welding Electrodes.

Q. SSPC – Steel Structures Painting Council, SP-2, Hand Tool Cleaning.

R. CBC Chapter 22, Division III – Allowable Stress Design and Plastic Design for Structural Steel Buildings.

S. ASTM A572 – Grade 50 – Structural Steel.

T. ASTM A108 – Standard Specification for Steel Bars, Carbon, Cold-Finish, Standard Quality.

U. AISC – American Institute of Steel Construction, Code of Standard Practice for Steel Buildings and Bridges, for Architecturally Exposed Structural Steel.

V. ASTM A992 – Steel for Structural Shapes for Use in Building Framing.

W. ASTM F1554 – Standard Specification for Anchor Bolts.

X. ASTM A780 – Repair of Damaged and Uncoated Areas of Hot-Dip Galvanized Coatings.

Y. Federal Emergency Management Agency (FEMA)

1. FEMA 353 – Recommended Specification and Quality Assurance Guidelines for Steel Moment Frame Construction for Seismic Application, latest edition.

2. American Institute of Steel Construction (AISC) Seismic Provisions for Structural Steel Buildings latest edition.

1.4 SYSTEM DESCRIPTION

A. Regulatory Requirements:

1. Structural steel shall conform to CBC requirements, except that steel manufactured by acid Bessemer process is not permitted for structural purposes.

1.5 SUBMITTALS

A. Shop Drawings:

1. Submit Shop Drawings, including complete details and schedules for fabrication and shop assembly of members, and details, schedules, procedures and diagrams showing the sequence of erection. Fully detail minor connections and fastenings not shown or specified in the Contract Documents to meet required conditions using similar detailing as shown in the Contract Documents. Include a fully detailed, well controlled sequence

and technique plan for shop and field welding that minimizes locked in stresses and distortion; submit sequence and technique plan for review by the Architect.

a. Include details of cuts, connections, camber, and holes in accordance with Figure 4.5 of AWS D1.1-02 or AISC Section J1.8, weld position plan and other pertinent data. Indicate welds by standard AWS symbols, and show size, length and type of each weld.

b. Provide setting drawings, templates, and directions for installation of anchor bolts and other anchorages to be installed for Work specified in other section.

d. Submit a list of steel items to be galvanized.

B. Product Data:

1. Submit copies of fabricator's specifications and installation instructions for the following products. Include laboratory test reports and other data required demonstrating compliance with these Specifications:

a. Structural steel, each type; including certified copies of mill reports covering chemical and physical properties.

b. Welding electrodes.

c. Welding gas.

d. Unfinished bolts and nuts.

e. Structural steel primer paint.

f. High-strength bolts, including nuts and washers.

C. Manufacturer's Mill Certificate:

1. Submit, certifying that products meet or exceed specified requirements.

D. Mill Test Reports:

1. Submit manufacturer's certificates, indicating structural yield and tensile strength, destructive and non-destructive test analysis.

E. Charpy-V-Notch (CVN) Impact Test: Submit certified copies of Charpy-V-Notch (CVN) Impact Test by the manufacturer for applicable steel members and components.

F. Submit certified copies of tests by manufacturer for fine grain practice. Structural steel base material, as described above, shall be manufactured using fully killed fine grain practice having grain size number 5 or better as determined by ASTM E 112.

G. Weld Procedures: Submit weld procedures for all welding on project to Owner's testing laboratory for approval. After approval by testing laboratory, submit to

Architect for record. Weld procedures shall be qualified as described in AWS D1.5, Section 5.12 or 5.13 for self-shielded FCAW, Weld procedures shall indicate joints details and tolerances, preheat and interpass temperature, post-heat treatment, single or multiple stringer passes, peening of stringer passes for groove welds except for the first and the last pass, electrode type and size, welding current, polarity and amperes and root treatment. The welding variables for each stringer pass shall be recorded and averaged, from these averages the weld heat input shall be calculated. Submit the manufacturer's product data sheet for all welding material used.

H. Welder's Certificates: Field welders shall be Project certified in accordance with AWS D1. 1-02. Shop welders shall be Project certified for FCAWS in accordance with AWS D1. 1-02.

I. Test Reports: Submit reports of tests conducted on shop and field welded and bolted connections. Include data on type of test conducted and test results.

J. Welding Material Certification: Comply with FEMA 353, Part I, Section 1.4.6.3. Submit to Owner's testing laboratory.

1.6 QUALITY ASSURANCE

A. Comply with the following as a minimum requirement, except as otherwise indicated:

1. American Institute of Steel Construction (AISC) "Code of Standard Practice for Steel Buildings and Bridges, latest edition.

2. Perform welding in accordance with AWS Standards, AWS D1.1, and California Building Code latest edition.

3. Welding for Moment Frames:

a. Heavy Sections: Comply with AISC Seismic Provision

b. Lamellar Tearing: Comply with AISC Seismic Provision

c. Column Webs at Continuity Plates: AISC Seismic Provision

d. Column Webs at Doubler Plates: AISC Seismic Provision

e. Web Access Hole: AISC Seismic Provision

B. Shop fabrication shall be inspected in accordance with CBC.

C. Erect mock-up panel of fabricated structural steel meeting Architecturally Exposed Structural Steel tolerances for exposed areas. Approval by Architect is required. Mock-up to remain for comparison but may not be left as part of the work.

1.7 DELIVERY, STORAGE AND HANDLING

A. Store structural steel above grade on platforms, skids or other supports.

B. Protect steel from corrosion.

C. Store welding electrodes in accordance with AWS D 12.1.

D. Store other materials in a weather-tight and dry place until installed into the Work.

PART 2 - PRODUCTS

2.1 GENERAL

A. Stock Materials: Provide exact materials, sections, shapes, thickness, sizes, weights, and details of construction indicated on Drawings. Changes because of material stock or shop practices will be considered if net area of shape or section is not reduced thereby, if material and structural properties are at least equivalent, and if overall dimensions are not exceeded.

2.2 MATERIALS

A. Structural Steel: All wide flange shapes shall conform to ASTM A 992 grade 50. Other steel shall conform to ASTM A36.

B. Unfinished Threaded Fasteners: ASTM A 307, Grade A, regular low carbon bolts and nuts.

C. High-Strength Threaded Fasteners: ASTM A 325, ASTM A490 or ASTM F1852 quenched and tempered, steel bolts, nuts and washers.

D. Primer: Lead-free metal primer.

E. Steel Pipe: ASTM A 53.

F. Structural Tubing:

1. Hot-formed, ASTM A 501.

2. Cold-formed, ASTM A 500, Grade B.

G. Galvanizing: ASTM A 123.

H. Welding Electrodes: Provide electrodes recommended by manufacturer for seismic connections.

1. Comply with AISC Seismic Provision

I. Shear stud connectors: ASTM A108, Grade 1015 forged steel, headed, uncoated, granular flux filled shear connector or anchor studs by Nelson Stud Welding Division of TRW, Lorain, OH, or equal.

J. Grout: ASTM C1107, non-shrink type, pre-mixed compound consisting of non-metallic aggregate, cement, water reducing and plasticizing additives, capable of developing a minimum compressive strength of **7,000** psi at 7 days; of consistency suitable for application and a 30 minute working time.

2.3 FABRICATION

A. Cleaning and Straightening Materials: Materials being fabricated shall be thoroughly cleaned of scale and rust, and straightened before fabrication. Cleaning and

straightening methods shall not damage material. After punching or fabrication of component parts of a member, twists or bends shall be removed before parts are assembled.

B. Cutting, Punching, Drilling and Tapping: Unless otherwise indicated or specified, structural steel fabricator shall perform the cutting, punching, drilling and tapping of Work so that Work of other trades will properly connect to steel Work.

C. Milling: Compression joints depending on contact bearing shall be furnished with bearing surfaces prepared to a common plane by milling.

D. Use of Burning Torch: Oxygen cutting of members shall be performed by machine. Gouges greater than 3/16 inch that remain from cutting shall be removed by grinding. Reentrant corners shall be shaped notch free to a radius of at least 1/2 inch. Gas cutting of holes for bolts or rivets is not permitted.

E. Galvanizing: After fabrication, items indicated or specified to be galvanized shall be galvanized in largest practical sizes. Fabrication includes operations of shearing, punching, bending, forming, assembling or welding. Galvanized items shall be free from projections, barbs, or icicles resulting from the galvanizing process.

F. Welding:

1. Type of steel furnished in welded structures shall provide chemical properties suitable for welding as determined by chemical analysis. Welds shall conform to the requirements of CBC Chapter 17. Conform to AWS D1.1, and CBC Chapter 22.

2. Materials and workmanship shall conform to the requirements specified herein and to CBC requirements, modified as follows:

    a. No welded splices shall be permitted except those indicated on Drawings unless specifically reviewed by the Architect.

    b. Drawings will designate joints in which it is important that welding sequence and technique be controlled to minimize shrinkage stresses and distortion.

3. Welding shall be performed in accordance with requirements of the AWS Structural Welding Code.

    a. Welded Joint Details: comply with AISC Seismic Provision

4. Architecturally Exposed Structural Steel: Verify that weld sizes, fabrication sequence, and equipment used for Architecturally Exposed Structural Steel will limit distortions to allowable tolerances. Prevent surface bleeding of back-side welding on exposed steel surfaces. Grind smooth exposed fillet welds ½ inch (13 mm) and larger. Grind flush butt welds. Dress exposed welds.

5. Remove erection bolts on welded, Architecturally Exposed Structural Steel; fill holes with plug welds; and grind smooth at exposed surfaces.

G. Shop Finish:

1. Notify the IOR when Work is ready to receive shop prime coat. Work shall be inspected by the IOR before installation of primer.

2. Structural steel and fittings, except galvanized items, which will be exposed when building is completed, shall receive a coat of primer.

3. The primer specified shall be spray applied, filling joints and corners and covering surfaces with a smooth unbroken film. The minimum dry film thickness of the primer shall be 2.0 mils.

4. Do not prime surfaces that will be fireproofed, field welded, in contact with concrete or high strength bolted.

H. Comply with fabrication tolerance limits of AISC's "Code of Standard Practice for Steel Buildings and Bridges" for structural steel.

I Fabricate Architecturally Exposed Structural Steel with exposed surfaces smooth, square, and free of surfaces blemishes, including pitting, rust and scale seam marks, roller marks, rolled trade names, and roughness.

1. Remove blemishes by filling, grinding, or by welding and grinding, prior to cleaning, treating and shop priming.

2. Comply with fabrication requirements, including tolerance limits of AISC's "Code of Standard Practice for Steel Buildings and Bridges" for Architecturally Exposed Structural Steel.

J. Architecturally Exposed Structural Steel: use special care in unloading, handling and erecting the steel to avoid marking or distorting the steel members. Minimize damage to any shop paint when temporary braces or erection clips are used. Avoid unsightly surfaces upon removal. Grind smooth tack welds and holes filled with weld metal or body solder. Plan and execute all operations in such a manner that the close fit and neat appearance of the structure will not be impaired.

K. Reduced Beam Sections (RBS's): Fabrication of RBS's as defined in AISC Seismic Provision

2.4 SHOP AND FIELD QUALITY CONTROL

A. The independent testing laboratory shall conduct and interpret test and state in each report whether test specimens comply with requirements, and specifically state any deviations there from.

B. Provide access to all places where structural steel Work is being fabricated or produced so required inspection and testing can be performed.

C. The independent testing laboratory may inspect and/or test structural steel at plant before shipment; however, Architect reserves the right at any time before Final Completion to deem materials not in compliance with the specified requirements as defective Work.

D. Correct defects in structural Work when inspections and laboratory test reports indicate noncompliance with specified requirements. Perform additional tests as may be required to reconfirm noncompliance of original Work, and as may be required to show demonstrate compliance of corrected Work.

E. Welding: Inspect and test during fabrication and erection of structural steel assemblies as follows:

1. Certify welders and conduct inspections and tests as required. Record types and locations of defects found in the Work. Record Work required and performed to correct deficiencies.

2. Inspect welds. Welds shall be visually inspected before performing any non-destructive testing. Groove weld shall be inspected by ultrasonic or other approved non-destructive test methods. Testing shall be performed to AWS D1.1 Table 6.3 cyclically loaded non-tubular connections.

3. Ultrasonic testing shall be performed by a specially trained and qualified technician who shall operate the equipment, examine welds, and maintain a record of welds examined, defects found, and disposition of each defect. Repair and test defective welds.

4. Rate of Testing: Completed welds contained in joints and splices shall be tested 100 percent either by ultrasonic testing or by radiography.

5. Welds, when installed in column splices, shall be tested by either ultrasonic testing or radiography.

6. Base metal thicker than 1-1/2 inches, when subjected to through-thickness weld shrinkage strains, shall be ultrasonically inspected by shear wave methods for discontinuities directly behind such welds. Tests shall be performed at least 48 hours after completed joint has cooled down to ambient air temperature.

7. Any material discontinuities shall be reviewed based on the defect rating in accordance with the criteria of AWS D1.1 table 6.3 by the Architect.

8. Other method of non-destructive testing and inspection, for example, liquid dye penetrate testing, magnetic particle inspection or radiographic inspection may be performed on weld if required.

9. Lamellar Tearing: Lamellar-tearing resulting from welding is a crack (with zero tolerance) and shall be repaired in accordance with AWS D1.1.

10. Lamination: The rejection criteria shall be based on ASTM A 435.

11. Where testing reveals lamination or conditions of lamellar tearing in base metal, the steel fabricator shall submit a proposed method of repair for review by the Architect. Test repaired areas as required.

12. Magnetic Particle Testing: Magnetic particle testing when required shall be provided in accordance with AWS D1.1 for procedure and technique. The standards of acceptance shall be in accordance with AWS D1.1 – Qualification.

H. Lamellar Tearing: Prior to welding plates 1 to 1-1/2 inches thick and greater and rolled shapes within the distance from 6 inches above the top of the joint to 6 inches below the bottom of the joint shall be checked by ultrasonic testing for laminations in base metal which may interfere with the inspection of the completed joint. Should these defects occur, members will be reviewed by the Architect. Welding procedure specifications in sub-section 1.5G specify welding practices to minimize lamellar tearing.

I. Prior Testing of Base Material: Test material before fabrication.

J. Lines and levels of erected steel shall be certified by a State of California licensed surveyor as set forth in related Division 01 section.

K. Welded studs shall be tested and inspected by the special inspector in accordance with requirements of AWS D1.1 – Stud Welding.

L. Record Drawings: After steel has been erected, correct or revise Shop Drawings and erection diagrams to correspond with reviewed changes performed in the field.

PART 3 - EXECUTION

3.1 PREPARATION

A. Verify governing dimensions and conditions of the Work before commencing erection Work.

1. Report discrepancies between drawings and field dimensions to Architect before commencing work.

2. Beginning of installation means erector accepts existing conditions and surfaces underlying or adjacent to work of this section.

B. Provide temporary shoring and bracing, and other support during performance of the Work. Remove after steel is in place and connected, and after cast-in-place concrete has reached its design strength.

3.2 ERECTION

A. Install structural steel accurately in locations, to elevations indicated, and according to AISC specifications and CBC requirements.

B. Clean surfaces of base plates and bearing plates.

1. Install base and bearing plates for structural members on wedges, shims, or setting nuts as required.

2. Tighten anchor bolts after supported members have been positioned and plumbed. Do not remove wedges or shims; cut off flush with edge of base or bearing plate before packing with grout.

C. Maintain erection tolerances of structural steel within AISC Code of Standard Practice for Steel Buildings and Bridges.

1. Members and components, plumbed, leveled and aligned to a tolerance not to exceed one-half the amount permitted for structural steel. Contractor to provide adjustable connections between Architecturally Exposed Structural Steel and the structural steel frame or the masonry or concrete supports, in order to provide the erector with means for adjustment.

D. Align and adjust various members forming part of complete frame or structure before permanently fastening. Before assembly, clean bearing surfaces and other surfaces that will be in permanent contact after assembly. Perform necessary adjustments to compensate for discrepancies in elevations and alignment.

1. Level and plumb individual members of structure.

E. Do not permit thermal cutting during erection of structural steel.

F. Where indicated for field connections, provide standard bolts complying with ASTM A 307.

G. Install high strength steel bolts at locations indicated. Assembly and installation shall be in accordance with CBC requirements.

1. Allowable hole sizes: 1/16 inch larger than bolt size.

2. Use friction type connection with standard hardened steel circular, square or rectangular washer under bolt nut.

3. Thoroughly clean area under bolt head, nut and washer. Remove all paint, lacquer, oil or other coatings except organic zinc-rich paints in accordance with SSPC, SP-2.

4. Tighten bolts by power torque wrench or hand wrench until twist-off.

H. Contractor shall be responsible for correcting detailing and fabrication errors and for correct fitting of all members and components.

I. Erect structural steel plumb and level and to proper tolerances as set forth in the AISC Manual. Provide temporary bracing, supports or connections required for complete safety of structure until final permanent connections are installed.

J. Install column bases within a tolerance of 1/8 inch of detailed centerlines, level at proper elevations. Support bases on double nuts and solidly fill spaces under bases with dry-pack cement grout.

K. Provide anchor bolts with templates and diagrams. Contractor shall be responsible for proper location and installation of bolts. Correct deficiencies and errors.

L. Galvanized Surfaces: Clean field welds, bolted connections, and abraded areas and apply galvanizing repair paint according to ASTM A780.

3.3 FITTING

A. Closely fit members, finished true to line and in precise position required to allow accurate erection and proper joining in the field.

B. Drilling to enlarge unfair holes will not be allowed. Allow only enough drifting during assembly to bring parts into position, but not sufficient enough to enlarge holes or distort the metal. Do not heat rolled sections, unless approved by Architect.

3.4 PUNCHING AND DRILLING

A. Punch material 1/16 inch larger than nominal diameter of bolt, wherever thickness of metal is equal to or less than the diameter of the bolt plus 1/8 inch.

B. Drill or sub-punch and ream where metal is equal to or more than the diameter of the bolt plus 1/8 inch. Make diameter for sub-punched and sub-drilled holes 1/16 inch larger than nominal diameter of bolt.

C. Precisely locate holes to ensure passage of bolt through assembled materials without drifting. Enlarge holes when necessary to receive bolts by reaming; flame cutting to enlarge holes is not acceptable. Structural Steel members with poorly matched holes will be rejected.

3.5 FINISHING

A. After erection, spots or surfaces where paint has been removed, damaged, or burned off and field rivets, bolts, and other field connections not concealed in the work, shall be cleaned of dirt, oil, grease, and burned paint and furnished with a spot coat of the same primer installed during shop priming.

B. Touchup Painting: Immediately after erection, clean field welds, bolted connections, and abraded areas of shop paint. Install paint to exposed areas with the same material installed during shop painting. Install by brush or spray to provide a minimum dry film thickness of 1.5 mils.

3.6 FIELD QUALITY CONTROL

A. Owner will provide a special inspector and independent testing laboratory to perform field inspections and tests and to prepare test reports.

B. Correct deficiencies in or remove and replace structural steel that inspections and test reports indicate do not comply with specified requirements.

3.7 CLEAN UP

A. Remove rubbish, debris and waste materials and legally dispose of off the Project Site.

3.8 PROTECTION

A. Protect the Work of this section until Substantial Completion.

3.9 HANDLING

A. Both in shop and in the field, transport, handle and erect to prevent damage or overstressing of any component.

END OF SECTION

SECTION 05 30 00
METAL DECKING

PART 1 - GENERAL

1.1 SUMMARY

A. Section Includes:

1. Metal decking.

2. Shear connectors.

B. Related Requirements:

1. Division 01 - General Requirements.

2. Section 01 45 23 - Testing and Inspection.

3. Section 05 12 00 - Structural Steel Framing.

1.2 REFERENCES

A. ASTM A108 – Standard Specification for Steel Bar, Carbon and Alloy, Cold-Finished.

B. ASTM A653 - Standard Specification for Steel Sheet, Zinc-Coated (Galvanized) or Zinc-Iron Alloy-Coated (Galvannealed) by the Hot-Dip Process.

C. ASTM D746 - Standard Test Method for Brittleness Temperature of Plastics and Elastomers by Impact.

D. ASTM D1056 - Standard Specification for Flexible Cellular Materials—Sponge or Expanded Rubber.

E. AWS D1.3 – Structural Welding Code Sheet – Steel.

F. AISI – Specifications for the Design of Cold-Formed Steel Structural Members.

1.3 PERFORMANCE REQUIREMENTS

A. Compute properties of deck sections on basis of effective design width as limited by provisions of the AISI specifications. Provide no less than deck section properties specified, including section modulus and moment of inertia per foot of width.

B. Regulatory Requirements:

1. Requirements of Regulatory Agencies: DSA and Underwriters Laboratories Inc. (UL) approval for the decking when installed as a part of an assembly indicated on Drawings in which fire resistive construction ratings are required.

2. Work of this section shall be in accordance with CBC.

C. Manufacturers shall be members of Steel Deck Institute (SDI).

1.4 SUBMITTALS

A. Shop Drawings: Drawings, sections and details indicate type of decking, location, finish, gage of metal, arrangement of sheets, necessary fabrication to incorporate decking into the Work, and relationship to openings and flashing.

1.5 QUALITY ASSURANCE

A. General: Metal decking steel shall conform to requirements of strengths and properties of standards specified.

B. Qualifications of Welders: Properly certified for the type of Work involved in compliance with CBC requirements.

C. Continuous inspection of welding will be performed by a special inspector, approved by DSA to inspect the Work of this section. Refer to Section 01 4523 - Testing and Inspection. The Project Inspector shall be responsible for monitoring the work of the special inspector to ensure that the inspection program is satisfactorily completed.

D. Identification of metal decking steel shall conform to the standards specified in Section 01 4523 - Testing and Inspection.

1. Fabricator shall furnish sufficient evidence to the Architect attesting compliance with specified requirements.

2. Conform to CBC requirements. Unclassified or unidentified decking is not permitted. Furnish deck manufacturer's certified mill analyses and test reports for each heat covering decking having a minimum Fy of 33 Ksi. In addition, for decking having F_y greater than 33 Ksi, testing laboratory shall perform one tension and elongation test and one bend or flattening test for each gage.

E. Unidentifiable Steel: Steel which is not readily identifiable as to grade from markings and test records is not permitted to be provided as part of the Work of this section.

PART 2 - PRODUCTS

2.1 ACCEPTABLE MANUFACTURERS

A. ASC Steel Deck.

B. Verco Manufacturing Co.

C. Epic Metals Corporation.

D. Equal.

2.2 MATERIALS

A. Metal Decking: Roll-formed sheets conforming to ASTM A653, with G90 zinc coating.

1. Section properties shall conform to applicable provisions of latest edition of AISI - Specification for the Design of Cold-Formed Steel Structural Members.

B. Flexible Closure Strips for Deck: Vulcanized, closed-cell, expanded chloroprene elastomer, complying with ASTM D1056, Grade SCE #41.

1. Brittleness Temperature: Minus 40 degrees F, ASTM D746.

2. Flammability Resistance: Self-extinguishing,

C. Metal Flashing and Closures: 22 gage minimum, with ASTM A653, G90 zinc coating.

D. Shear Connectors: Headed stud type, ASTM A108 Grade 1015, cold-finished carbon steel complying with AISC specifications.

2.3 FABRICATION

A. Corrugated sheets or sections shall be designed to support required live load between supporting members.

B. Provide decking in lengths to span over three or more supports.

C. Except as detailed otherwise, provide decking with interlocking side laps, 2 ½-inch minimum end bearing, and 1 ½-inch minimum side bearing.

D. Welding: Provide materials and methods in accordance with recommendations of steel decking manufacturer and reviewed submittals. Hold decking tight to the supporting elements with screws or other means for proper welding or crimping of the decking edges. Conform to AWS D1.3, and to the patterns and weld types indicated, with welds free from sharp edges and protrusions. Field coat welds and abraded surfaces at completion with an anodic type galvanizing repair paint. Omit the field paint coating where welds or abrasions are covered by concrete fill or sprayed fireproofing.

PART 3 - EXECUTION

3.1 OPENINGS

A. Cut and reinforce units to provide openings which are located and dimensioned on the structural and mechanical Drawings.

B. Provide openings, or other Work not indicated on the Drawings.

3.2 INSTALLATION

A. Install metal decking in accordance with decking manufacturers' recommendations, requirements of Drawings, Shop Drawings, and Specifications.

B. Install metal decking on supporting steel framework and adjust to final position before permanently fastening in place.

1. Install each unit to proper bearing on supports.

2. Install units in straight alignment for entire length of run of cells with close registration of cells of one unit with those of abutting unit.

C. Fasten decking to steel framework at ends of units and at intermediate supports. Welding shall be as indicated on Drawings.

D. Fasten side laps between supports as indicated on Drawings.

E. Perform field cutting parallel with cells in area between cells, leaving sufficient horizontal material to permit welding to support steel.

F. Weld shear connectors to supports thru decking units as required by Drawings. Weld only on clean, dry surfaces. Do not weld shear connectors thru two layers of decking units.

3.3 METAL FLASHINGS AND CLOSURES

A. Furnish, install, and weld in position, sheet metal closure flashing, closure angles, closure plates, profile plates, and shear plates.

B. Close open ends of cell runs at columns, openings, walls, similar interruptions and termination.

3.4 FIELD QUALITY CONTROL

A. Inspection: Install steel decking under continuous inspection according to CBC Chapter 1704A.3.

1. Welding inspection for steel deck diaphragms shall conform to CBC Section 2204A.1.

3.5 CLEAN UP

A. Remove rubbish, debris, and waste materials and legally dispose of off the Project site.

3.6 PROTECTION

A. Protect the Work of this section until Substantial Completion.

END OF SECTION

SECTION 05 40 00
COLD-FORMED METAL FRAMING

PART 1 - GENERAL

1.01 SUMMARY

A. Section Includes:
   1. Furring
   2. Stud framing.
   3. Specialty framing.
   4. Connectors.
   5. Wall backings.
   6. Slot metal channel framing.
   7. Supplementary components and accessories normally furnished or necessary for a complete installation, whether or not such items are indicated on the Drawings or included in the Specifications.

B. Related Requirements:
   1. Section 09 22 16 for lightgage metal framing.

1.02 SECTION REQUIREMENTS

A. Delegated Design Requirements:
   1. Engineer, fabricate, assemble, and install framing that conforms to the profiles indicated and other Contract Document requirements; meets specified performance criteria; and results in structurally sound, non-corroding, and weathertight assemblies that accommodate, resist, distribute, or transfer in-service loads without incipient or catastrophic failure.
   2. Maintain visual design concept indicated, including sizes, profiles, and alignments. Deviation from visual design concept is non-conforming work and prohibited without prior written acceptance by the Architect.

B. Qualifications:
   1. Installer: Company or individuals must have at least 5 years' experience installing framing for at least 30 previous projects similar to this project in size, material, design, and complexity.
   2. Welders: Welding personnel and supervisors must comply with, and welding procedures must conform to, the "*Qualification*" requirements of American Welding Society publications AWS D1.3, "*Structural Welding Code – Sheet Steel*" and AWS D19.0, "*Welding Zinc Coated Steel*" applicable to the project. Only certified welders current in their certification may perform or supervise any welding work.
   3. Supervisors: Individuals must have at least 7 years' experience installing framing for at least 30 previous projects similar to this project in size, material, design, and complexity, including at least 2 years' supervisory experience directing and leading framing installers.
   4. Engineer: Must be a licensed professional structural engineer registered to practice in California having at least 10 years' experience performing the kind of engineering services indicated for at least 20 previous projects similar to this project in size, material, design, and complexity.

C. Submittals: Submit product data, shop drawings, written descriptions of specified qualifications, and delegated design submittals.

D. Mockups: If an *ex-situ* exterior wall integrated mockup is required for this project, then integrate framing into the mockup as part of the work of this specification section.

PART 2 - PRODUCTS

2.01 MANUFACTURERS

A. Manufacturers: Provide products manufactured by one of the following, or equal.
   1. California Expanded Metal Products Co. (CEMCO)
   2. Clarkwestern Dietrich Building Systems LLC.
   3. Olmar Supply Inc.
   4. SCAFCO Corp.

2.02 MATERIALS

A. HDG Metallic-Coated Steel Sheet for Cold-Formed Framing: ASTM A 1003, ST50 (Structural Grade 50), with at least a G60 coating weight designation (mass designation) on both surfaces with equal coating weight on each surface.

2.03 COLD-FORMED FURRING

A. Hat Furring Channels:
   1. Products: “FC Series Furring Channel” manufactured by Clarkwestern Dietrich Building Systems LLC, or equal.
   2. Requisite Properties:
      a. Depth: 7/8- or 1-1/2-inch deep channels, as indicated.
      b. Minimum Thickness: At least 43 mils BMT (MSG 18).
      c. Web: 1-1/4 inches wide.
      d. Screw Flanges: 3/4-inch wide.

B. Z-shaped Furring Channels:
   1. Products: “Z-Furring (ZF-Series)” manufactured by Clarkwestern Dietrich Building Systems LLC, or equal.
   2. Requisite Properties:
      a. Depth: One to 3 inches deep, as indicated.
      b. Minimum Thickness: At least 43 mils BMT (MSG 18).
      c. Screw Flanges: 1-1/4 inches wide.

2.04 COLD-FORMED STUD FRAMING

A. Studs:
   1. Description: Pre-punched roll-formed C-shaped framing members with manufacturer’s standard knockout sizing and spacing.

2. Product: “Structural Stud S162 (CSJ)” manufactured by ClarkDeitrich Building Systems, or equal.
3. Requisite Properties:

    a. Depth: Indicated on the Drawings.

    b. Minimum Thickness: At least 54 mils BMT (MSG 16).

    c. Flanges: At least 2-inch (1-1/4- to 3-1/2-inch) wide stiffened flanges with at least 1/2-inch returns (lip).

B. Tracks (Top and Bottom Runners):
1. Description: Un-punched roll-formed U-shaped runners manufactured from the same material to corresponding stud sizes and gages.
2. Product: “Structural Track” manufactured by ClarkDeitrich Building Systems, or equal.
3. Requisite Properties:

    a. Depth: Indicated on the Drawings.

    b. Minimum Thickness: At least 54 mils BMT (MSG 16).

    c. Flanges: At least 1-1/2-inch wide unstiffened flanges.

C. Deflection Track Systems:
1. Description: Slotted roll- or brake-formed track installed in head-of-wall deflection conditions to accommodate vertical movement caused by normal head-of-wall and floor extension or compression.
2. Product: one of the following, or equal.

    a. “MaxTrack” slotted deflection track or “BlazeFrame” fire stop deflection track manufactured by Clarkwestern Dietrich Building Systems LLC.

    b. “CEMCO Slotted Track (CST)” manufactured by CEMCO.

D. Manufactured Bridging Channels:
1. Description: Roll-formed channel- or L-shaped stiffeners with pre-notched slots installed in both load-bearing and non-load bearing walls to help resist stud twisting.
2. Products: “Spazzer 5400” manufactured by Clarkwestern Dietrich Building Systems LLC, or equal.
3. Requisite Properties:

    a. Size: 1-1/2-inch wide by 1/2-inch deep.

    b. Minimum Thickness: At least 54 mils BMT (MSG 16).
4. Bridging Clips: “Spazzer Bar Guard” manufactured by Clarkwestern Dietrich Building Systems LLC, or equal.
5. Alternative Bridging Clips: As an alternate to manufactured bridging clips, 1-1/2-inch wide by 1/2-inch deep by full stud width cold-rolled angle clips manufactured from at least 54-mil (MSG 16) BMT HDG metallic-coated steel sheet may be provided.

E. Cold Rolled Channel (CRC) Bridging:
1. Description: Un-punched roll-formed U-shape stiffeners installed in both load-bearing and non-load bearing walls to help resist stud twisting.
2. Requisite Properties:

a. Size: 1-1/2-inch wide by 1/2-inch deep.

b. Minimum Thickness: At least 54 mils BMT (MSG 16).

c. Flanges: 1-1/2 inches wide unstiffened flanges.

3. Manufactured Bridging Clips: “EasyClip U-, B-, or X-Series Clip Angles” manufactured by Clarkwestern Dietrich Building Systems LLC, or equal.

F. Flat Strap Bridging (Strapping):

1. Application: Flat sheet installed to provide resistance to stud rotation and minor axis buckling under loads for studs deeper than 6 inches.
2. Requisite Properties:

a. Width: Between 2 and 20 inches, as indicated or necessary.

b. Minimum Thickness: At least 54 mils BMT (MSG 16).

G. Built-Up Headers:

1. Built-Up Curtain Wall Headers: Un-punched roll-formed C-shaped framing members and U-channel runners.
2. Load-Bearing Box Beam Headers: Un-punched roll-formed C-shaped framing members.
3. Requisite Properties:

a. Depth: Indicated on the Drawings.

b. Minimum Thickness: At least 54 mils BMT (MSG 16).

c. Flanges: 1-5/8-inch wide stiffened flanges with at least 1/2-inch returns (lip).

4. Header Connectors:

a. Description: Connectors to attach either beams to columns or headers to jambs.

b. Product: “DROP'N LOCK CLIP” connectors manufactured by Clarkwestern Dietrich Building Systems LLC, or equal.

2.05 SPECIALTY FRAMING

A. KCS Studs (King Kong Studs):

1. Description: Pre-punched C-shaped framing members with manufacturer’s standard knockout sizing and spacing.
2. Requisite Properties:

a. Depth: Indicated on the Drawings.

b. Minimum Thickness: At least 54 mils BMT (MSG 16).

c. Flanges: 3-inch wide stiffened flanges with at least 7/8-inch returns (lip).

B. Manufactured Headers:

1. Description: One- or 2-piece pre-engineered header with associated inserts and clips.
2. Products: one of the following, or equal.

a. “RedHeader RO Rough Opening System” manufactured by Clarkwestern Dietrich Building Systems LLC.

b. “Pro-X” manufactured by Brady Construction Innovations, Inc.

C. Corner Angles:
1. Description: Utility angles installed as a connection strut or angle, as corner reinforcement, or other various framing applications.
2. Requisite Properties:

a. Minimum Thickness: At least 30 mils BMT (MSG 20).

b. Legs: 2- or 3-inch wide legs, as indicated, unless a wider or uneven leg size is explicitly indicated; or is otherwise supplied, required, recommended, authorized, or accepted by the manufacturer.

2.06 CONNECTORS

A. Bypass Connectors:
1. Description: Clips used to attach exterior curtain wall studs to building superstructure and to provide vertical building movement independent of metal stud framing.
2. Bypass Slab Connectors: “Slide Clip” (minimal or no standoff conditions) or “Fast Clip Slide Clip” (medium standoff conditions) manufactured by Clarkwestern Dietrich Building Systems LLC, or equal.
3. Bypass Structure Connectors: “Quick Clip” (medium standoff conditions) and “Extended Fast Clip Slide Clip” or “Fast Strut” (large standoff conditions) manufactured by Clarkwestern Dietrich Building Systems LLC, or equal.

B. Multipurpose Connectors Rigid Connectors: “Uni-Clip” manufactured by Clarkwestern Dietrich Building Systems LLC, or equal.

2.07 WALL BACKINGS

A. Metal Wall Backings:
1. Description: General multipurpose flat sheet and formed metal stock used as backing to support shelves, cabinets, fixtures or handrails when applied to framing. Provide wall backing in addition to, not as a replacement for, tension strapping or cross bracing.
2. Heavy-Duty Backing: Installed to support items distributing not more than 80 pounds per stud.

a. Material: 6-inch wide un-punched U-shaped runners manufactured from minimum 54-mil BMT (MSG 16) HDG metallic-coated steel sheet.

b. Provide individual runner in lengths long enough to span across at least 3 studs.

c. Notch and bend track legs so that backing plate is flush with exterior face of stud.

d. Do not cut track legs between supporting studs.

e. Fasten backing track to each stud with at least 3 screw fasteners per stud.
3. Medium-Duty Backing: Installed to support items distributing not more than 20 pounds per stud.

a. Material: Minimum 6-inch wide un-punched U-shaped runners manufactured from minimum 54-mil BMT (MSG 16) HDG metallic-coated steel sheet.

b. Provide individual runner in lengths long enough to span across at least 2 studs.

c. Fasten backing track to each stud with at least 3 screw fasteners per stud.

4. Light-Duty Backing: Installed to support items distributing not more than 5 pounds per stud.

   a. Backing Material: Minimum 6-inch wide backing strip manufactured from minimum 54-mil BMT (MSG 16) HDG metallic-coated steel sheet.

   b. Provide individual runner in lengths long enough to span across at lreast 3 studs.

   c. Fasten backing track to each stud with at least one screw fasteners per stud.

B. Wood Wall Backings:
   1. Description: Fire-retardant treated wood (FRT) backing system.
   2. Product: “Danback Flexible Wood Backing System” manufactured by Clarkwestern Dietrich Building Systems LLC, or equal.
   3. Requisite Properties:

      a. Material: Nominal 3/4-inch thick CDX Douglas fir fire-retardant treated wood

      b. Dimensions: 48 inches long by 5-1/8 inches high.

2.08 SLOT METAL CHANNEL FRAMING

A. Description: Continuous slot metal channel framing conforming to MFMA-4, and associated fittings and hardware necessary for supporting cable trays, conduit, pipes and similar items.

B. Material: At least 0.0747-inch BMT (MSG 14) HDG metallic-coated steel sheet complying with ASTM A 653, structural steel (SS), Grade 33 or better, at least a G90 zinc coating designation on both surfaces with equal coating weight on each surface.

C. Manufacturers: Provide products manufactured by one of the following, or equal.
   1. Flex-Strut, Inc.
   2. PHD Manufacturing, Inc.
   3. Unistrut Corp.

D. Product: “P300 SL” manufactured by Unistrut Corp., or equal.

E. Requisite Properties:
   1. Types: standard and welded combination channels as required by conditions of installation and service.
   2. Height: heights as required by engineering calculations to meet load capacities, but not less than 1-3/8 inches.
   3. Suspension System: Hot-dip galvanized coarse-threaded (UNC) carbon steel rods having diameters as required by engineering calculations to meet load capacities, but not less than 3/8-inch.

F. Accessories: kickers, perimeter angle pieces and other accessories as supplied, required, recommended, or accepted by the slotted channel framing manufacturer and necessary for a complete and structurally-sound installation.

G. Finish: Chemically treated where retaining natural zinc finish; bonderized where painted finish is indicated.

2.09 ACCESSORIES

A. Sill Sealer and Liner Gaskets:
   1. Description: Self-adhering closed cell polyethylene foam air and moisture barrier.
   2. Applications:
      a. Sill Sealer: Install on the top of foundation wall, slab-on-grade. or curbs beneath exterior wall runner track or sill plates.
      b. Plate Liner: Install between floor deck and interior wall runner track or sill plates at shafts, hoistways, and other locations where necessary or indicated.
   3. Products: the following products manufactured by Protecto Wrap Co.
      a. Sill Sealer: 3/8-inch thick “Protecto Triple Guard Energy Sill Sealer”, or equal.
      b. Plate Liner: 1/4-inch thick “Protecto Energy Plate Liner”, or equal.

B. Shims: Load bearing, non-leaching, high-density multimonomer plastic.

C. Screw Fasteners: #8- and #10-32 UNC 2B (0.164- and 0.190-inch shank diameter, 32 threads per inch) by at least one-inch long, pan head, coarse thread, self-drilling uncoated bi-metal screw fasteners, unless another fastener type is explicitly indicated; or supplied, required, recommended, or accepted by the manufacturer for actual in-service conditions applicable to the project.

D. Power-Actuated Fasteners:
   1. Description: ICC-ES-approved anchors conforming to California Building Code Category 1, Seismic Zones A-F.
   2. Manufacturer: products manufactured by Hilti, Inc., or equal.

E. Fastenings: backings, inserts, loose connection hardware, fasteners, anchors, attachments, connectors, and other items supplied, required, recommended, or accepted by the manufacturer for actual in-service conditions applicable to the project.

F. Other Accessories: Provide other accessories and secondary items normally furnished or necessary for a complete installation; or supplied, required, recommended, or accepted by the manufacturer for actual in-service conditions applicable to the project.

PART 3 - EXECUTION

3.01 INSTALLATION REQUIREMENTS

A. General:
   1. Ensure proper supervision practices are followed at the project site before the installer begins work and at all times during installation.
   2. Verify in-place supporting and adjacent construction conforms to the manufacturer’s requirements or recommendations, and satisfies all other conditions that might affect the quality of installation or the durability, appearance, or performance of installed and adjacent items. Securely attach framing in place to supporting construction.
   3. Install framing using materials and methods required, recommended, or accepted by the manufacturer, along with manufacturer-recommended accessories and techniques.
   4. Set framing true to line; plumb, level, and square without warp or rack; with flush, well-fitted joints; and in alignment with adjacent construction.

5. Securely attach framing in place to supporting construction.

B. Installation Tolerances: Install framing within the following tolerance variations.
   1. Maximum Out of Plumb: Not more than L/960 of span, or 1/8-inch in 10 feet.
   2. Maximum Out of Level: Not more than L/960 of span, or 1/8-inch in 10 feet,
   3. Maximum Out of Plane: Fastening surfaces of adjacent framing members may not vary by more than 1/8-inch.
   4. Maximum Stud Spacing Variance: Not more than 1/8-inch. Cumulative error may not exceed minimum fastening requirements of sheathing or other finishing materials.

C. Correction and Repair:
   1. Correct deficiencies that do not conform to the Contract Documents.
   2. Repair non-conforming, damaged, and defective work.
   3. Installed framing must be warrantable. Do not install, correct, or replace framing in a manner that is un-warrantable by the manufacturer or that results in any warranty or guarantee becoming void.

D. Protection:
   1. Protect installed framing in place from deterioration and damage until covering framing.
   2. Remove protection when it's no longer needed and before covering framing.

END OF SECTION

©AWCWEST 18E22 All rights reserved.
RSTLNE. TAGDSC, ELMTB, CLSB2010, CLSB3080, ELMTC, CLSC1010

SECTION 05 4100
STRUCTURAL METAL STUD FRAMING

PART 1 - GENERAL

1.01 SUMMARY

A. Section Includes:

1. Load-bearing metal stud systems.

B. Related Requirements:

1. Division 01 - General Requirements.

2. Section 01 4523 - Testing and Inspection.

3. Section 05 1200 - Structural Steel Framing.

4. Section 09 2216 - Non-Structural Metal Framing.

1.02 SUBMITTALS

A. Shop Drawings: Submit drawings showing framing, connection details, accessories and anchorage. Indicate location of assemblies, size and spacing of framing components.

B. Product Data: Submit manufacturer's catalog data for each item proposed for installation.

C. Certificates: Furnish manufacturer's certification that materials meet or exceed Specification requirements.

1.03 QUALITY ASSURANCE

A. Comply with following as a minimum requirement:

1. AISI - Specifications for Design of Cold Formed Steel Structural Members.

2. Welds shall be performed by AWS certified welders. Welding shall be performed in accordance with requirements of American Welding Society (AWS) Structural Welding Code-Steel D1.1 and D1.3. Structural welding Code-Sheet Steel.

3. Welding shall be inspected by a special inspector, approved by DSA to inspect Work of this section. The Project Inspector shall be responsible for monitoring work of special inspector to ensure that inspection program is satisfactorily completed.

4. ASTM A653 – Standard Specification for Steel Sheet, Zinc-Coated (Galvanized) or Zinc-Iron Alloy Coated (Galvannealed) by Hot Dip Process.

5. ASTM A924 – Standard Specification for General Requirements for Steel Sheet Metallic-Coated by Hot-Dip Process.

6. ASTM A1003 – Standard Specification for Steel Sheet, Carbon, Metallic- and Nonmetallic-Coated for Cold-Formed Framing Members.

7. ASTM A1008 – Standard Specification for Steel Sheet and Strip, Hot-Rolled, Carbon, Structural High-Strength Low-Alloy, and High-Strength Low-Alloy with Improved Formability.

8. ASTM C954 – Standard Specification for Load-Bearing (Transverse and Axial) Steel Studs, Runners (Tracks) and Bracing or Bridging for Screw Application of Gypsum Panel Products and Plaster Bases.

9. ASTM C955 – Standard Specification for Load-Bearing (Transverse and Axial) Steel Studs, Runners (Tracks), and Bracing or Bridging for Screw Application of Gypsum Panel Products and Metal Plaster Bases.

10. ASTM C1007 – Standard Specification for Installation of Structural (Axial and Transverse) Steel Framing Members and Accessories.

11. ASTM E488 – Standard Test Methods of Strength Anchors in Concrete and Masonry.

12. ASTM E1190 – Standard Test Methods for Strength of Power-Actuated Fasteners Installed in Structural Members.

13. Manufacturer shall be a member of the Steel Stud Manufacturers Association (SSMA).

B. Tolerances: Install walls and partitions on straight lines, plumb, free of twists or other defects, and contacting a 10-foot straight edge for its entire length at any location within a 1/8 inch tolerance. Install horizontal framing level within a tolerance of 1/8 inch in 12 feet in any direction.

1.04 DELIVERY, STORAGE AND HANDLING

A. Materials shall be delivered in their original unopened packages and stored protected from damage. Do not store material directly on grade. Provide adequate support to prevent bowing of material prior to installation.

B. Store welding electrodes in accordance with AWS D12.1.

PART 2 - PRODUCTS

2.01 MANUFACTURERS

A. Provide studs, tracks, joists, header, and accessories manufactured by one of following:

1. ClarkWestern Building Systems.

2. Dietrich Industries, Inc.

3. Marino/WARE.

4 Cemco.

5. Equal.

B. Special Connection Accessories: Products manufactured by The Steel Network, Inc., or equal.

2.02 MATERIALS

A. Light Gage Metal Framing:

1. Metal framing shall be formed from corrosion resistant-steel conforming to requirements of ASTM A653, 50 ksi minimum.

2. Metal framing shall be zinc coated in conformance to requirements of ASTM A926, G60.

3. Metal framing shall be manufactured in conformance to ASTM C955.

4. Install metal framing per ASTM C1007, Standard Specification for Installation of Load-Bearing (Transverse and Axial) Steel Studs and Related Accessories.

B. Gages and properties of studs shall be as indicated on Drawings.

C. Mechanical anchors to concrete and masonry shall be metal cinch at least 3/8 inch in diameter threaded bolt head type. Anchor bolts to be installed in concrete shall be hook type ½ inch diameter or more. Unless otherwise indicated.

D. Mechanical anchors to metal framing shall be No. 10 self-tapping and self-drilling wafer-head screws.

E. Accessories: Special top tracks, angles, fasteners, and strips of gypsum wallboard, as required for fire rating assembly required at each condition.

F. Mineral Wool Safing Insulation: 4.0 pcf density. Thermafiber, Fibrex, or equal.

PART 3 - EXECUTION

3.01 INSTALLATION

A. Install plumb and true. Install necessary accessories for proper installation.

B. Anchor top and bottom runner track to ceiling or roof structure overhead and to floor structure below.

C. Install studs squarely in top and bottom runner track with firm abutment against track webs.

D. Align and plumb studs, and fasten to flanges of both top and bottom runner tracks.

E. Provide three studs minimum at corners of stud walls. Locate so as to provide surfaces for attachment of interior and exterior facing materials.

F. Members not indicated to be welded together shall be attached with manufacturer recommended screws with minimum one screw at each flange of stud to top and bottom track. Wire tying of framing members is not permitted.

G. Provide lateral bracing and bridging in accordance with manufacturer's written recommendations or as required by CBC.

H. Intersecting walls and partitions, whether load-bearing or not, shall be connected.

I. Splices in axially loaded studs are not permitted.

J. Splice or butt weld butt joints in runner tracks. No splices are permitted in tracks over lintels, diaphragm sheathing, or diagonal bracing.

K. Weld connections by fillet welds or plug welds in accordance with AWS recommended procedures and practices.

L. Touch-up field abrasions and welds with galvanizing touch-up material.

M. Studs that frame door openings shall be clipped to floor with 14 gage angle clips. Each clip to have two fasteners into studs and two fasteners into floor.

N. Provide additional joists or blocking adjacent to exterior and interior walls, openings and elsewhere as required to provide support for indicated ceiling construction.

O. Provide an additional joist under parallel partitions where partition length exceeds ½ joist span and around floor and roof openings which interrupt one or more spanning members.

3.02 CONNECTIONS TO METAL DECKING

A. Provide premolded neoprene filler strips matching flute profile for non-fire-rated walls and partitions covered on one or both sides up to metal decking.

B. Top runner track of fire-rated partitions shall be a minimum of 36 mils (20 gage), unless noted otherwise, and attached to metal deck with required fasteners at spacing required for fire rating, but in no case over 16 inches on center. Areas above runner shall be friction fit with a minimum depth of 2 ½ inches of 4 pounds per cubic foot density mineral wool insulation. A minimum of ½ inch of firestopping compound shall be installed to each side of mineral wool insulation for a one-hour system, and one inch of firestopping for a two-hour system. Install required special tracks, angles, fasteners and strips of gypsum wallboard to provide required fire resistance rating.

C. Fire-rated top tracks shall be installed in accordance with manufacturer's recommendations and fire rating approval requirements.

3.03 QUALITY CONTROL

A. Welding Inspection:

1. Inspection of field welding operations shall be performed by special inspector.

2. The special inspector shall inspect material, equipment, procedures, welds, and welder qualifications.

3.04 CLEAN UP

A. Remove rubbish, debris, and waste materials and legally dispose of off Project site.

3.05 PROTECTION

A. Protect Work of this section until Substantial Completion.

END OF SECTION

SECTION 05 50 00
METAL FABRICATIONS

PART 1 - GENERAL

1.01 SUMMARY

A. This section includes the following metal fabrications:

1. Rough hardware
2. Ladders
3. Ladder safety cages
4. Miscellaneous framing, supports and trim
5. Metal bar gratings
6. Steel pipe guardrails and handrails
7. Metal stairs

B. Related Sections: Refer to Section 05 12 00, "Structural Steel" for structural steel framing components as applicable.

1.02 REFERENCES

A. Aluminum Association (AA)

B. American National Standards Institute (ANSI)

C. American Society of Testing and Materials (ASTM)

D. American Welding Society (AWS)

1. D1.1 - Structural Welding Code - Steel
2. D1.3 - Structural Welding Code - Sheet Steel

E. National Association of Architectural Metal Manufacturers (NAAMM)

1. AMP 500 Metal Finishes Manual
2. AMP 510 Metal Stair Manual
3. MBG 531 Metal Bar Grating Manual
4. MBG 532 Heavy Duty Metal Bar Grating Manual and Pipe Railing Manual

F. Steel Structures Painting Council (SSPC)

1.03 DEFINITIONS

A. Refer to ASTM E985 for railing-related terms that apply to this section.

B. Refer to the NAAMM publications listed in Article 1.02 "References" for definition of terms that apply to this section.

1.04 SUBMITTALS

A. General: Submit the following in accordance with Conditions of Contract and Section 01 33 00, "Submittal Procedures".

B. Product Data: Submit product data for products used in metal fabrications, including paint products, grout and fasteners.04-29-11 Issuance UTD - Section 05 50 00 Page 2 of 12 Metal Fabrications

C. Shop Drawings: Submit detailed shop and erection drawings of each metal fabrication indicated. Includeplans, elevations, sections, and details of metal fabrications and their connections. Show anchorage and accessory items.

D. Welder certificates signed by the Contractor certify that welders comply with requirements specified in 1.05C.

E. Welding Procedures: Provide written welding procedure specification (WPS) document per AWS Code requirements.

F. Qualification data for firm specified in 1.05B to demonstrate their capabilities and experience.

1.05 QUALITY ASSURANCE

A. Codes and Standards: Comply with provisions of the following, except as otherwise indicated. Where conflicts occur, comply with the more stringent requirements.

1. ANSI 14.3

2. AWS D1.1 and D1.3

3. NFPA 101

B. Fabricator Qualifications: Firm experienced in successfully producing metal fabrications similar to that shown on the drawings, with sufficient production capacity to produce required units without causing delay in the work.

C. Qualify welding processes and welding operators in accordance with AWS D1.1 and D1.3. Certify that each welder has satisfactorily passed AWS qualification tests for welding processes involved and, if pertinent, has undergone recertification.

D. All materials used shall be free of lead and asbestos fibers.

PART 2 - PRODUCTS

2.01 FERROUS METALS

A. Metal Surfaces, General: Form metal fabrications exposed to view upon completion of the work, provide materials selected for their surface flatness, smoothness, and freedom from surface blemishes. Do not use materials whose exposed surfaces exhibit pitting, seam marks, roller marks, rolled trade names, roughness, and, for steel sheet, variations in flatness exceeding those permitted by referenced standards for stretcher leveled sheet.

B. Steel Plates, Shapes, and Bars: ASTM A36.

C. Rolled Steel Floor Plates: ASTM A786.

D. Steel Bars for Gratings: ASTM A569 or ASTM A36.

E. Wire Rod for Grating Cross Bars: ASTM A510.

F. Steel Tubing: Cold-formed, ASTM A500, Grade B, unless otherwise indicated.

G. Uncoated Structural Steel Sheet: Hot-rolled, ASTM A570, Grade 30 unless otherwise indicated.

H. Uncoated Steel Sheet (Commercial quality): Cold-rolled, ASTM A366.

I. Galvanized Steel Sheet: Quality as follows:

1. Structural Quality: ASTM A446; Grade A, unless another grade required for design loading, and G90 coating designation unless otherwise indicated.

2. Commercial Quality: ASTM A526, G90 coating designation unless otherwise indicated.

J. Steel Pipe: ASTM A53, Type S, Grade B, standard weight (schedule 40), black finish, unless otherwise indicated.

K. Gray Iron Castings: ASTM A48, Class 30.

L. Malleable Iron Castings: ASTM A47, Grade 32510.

M. Brackets, Flanges and Anchors: Cast or formed metal of the same type material and finish as supported rails, unless otherwise indicated.

N. Concrete Inserts: Threaded or wedge type; galvanized ferrous castings, either malleable iron, ASTM A47,or cast steel, ASTM A27. Provide bolts, washers, and shims as required, hot-dip galvanized per ASTMA153.

O. Welding Rods and Bare Electrodes: Select in accordance with AWS specifications for the metal alloy to be welded.

2.02 STAINLESS STEEL

A. Bar Stock: ASTM A276, Type 302 or 304.

B. Plate: ASTM A167, Type 302 or 304.

2.03 ALUMINUM

A. Extruded Bars and Shapes: ASTM B221, alloy 6061-T6 or 6063-T6 for bearing bars of gratings and shapes and 6061-T6 for grating cross bars.

B. Aluminum-Alloy Rolled Tread Plate: ASTM B632, alloy 6061-T4 for treads and 6061-T6 for platforms.

2.04 GROUT

A. Non-shrink Nonmetallic Grout: Premixed, factory-packaged, non-staining, non-corrosive, non-gaseous grout complying with ASTM C1107. Provide grout specifically recommended by manufacturer for interior and exterior applications of type specified in this section. Subject to compliance with requirements, products that may be incorporated in the work include, but are not limited to the following:

1. Euco N-S Grout - Euclid Chemical Co

2. Kemset - Chem-Masters Corp

3. Crystex - L & M Construction Chemicals, Inc

4. Sonogrout - Sonneborn Building Products Div., Rexnord Chemical Products, Inc

2.05 FASTENERS

A. General: Provide zinc-coated fasteners for exterior use or where built into exterior walls. Select fasteners for the type, grade, and class required. Suspect/counterfeit bolts will not be accepted and will be replaced at Contractor's expense.

2.06 PAINT

A. Shop Primer for Ferrous Metal: Red oxide, lead- and cadmium-free, corrosion- inhibiting primer complying with performance requirements of FS TT-P-664.

B. Galvanizing Repair Paint: High zinc dust content paint for galvanizing welds in galvanized steel, with dry film containing not less than 94% zinc dust by weight, and complying with SSPC- Paint-

C. Bituminous Paint: Cold-applied asphalt mastic complying with SSPC-Paint-12 except containing no asbestos fibers.

D. Zinc Chromate Primer: FS TT-P-645.

2.07 CONCRETE FILL

A. Concrete Materials and Properties: Comply with requirements for Section 03 30 00, "Cast-in-Place Concrete" for normal weight, ready-mix concrete with minimum 28- day compressive strength of 3000 psi (21 MPa), unless higher strength indicated.

B. Nonslip Aggregate Finish: Factory-graded, packaged material containing fused aluminum oxide grits or crushed emery as abrasive aggregate; rust-proof and non- glazing; unaffected by freezing, moisture, or cleaning materials.

2.08 FABRICATION - GENERAL

A. Form metal fabrications from materials of size, thickness, and shapes indicated but not less than that needed to comply with performance requirements indicated. Work to dimensions indicated or accepted on shop drawings, using proven details of fabrication and support. Use type of materials indicated or specified for various components of each metal fabrication.

B. Form exposed work true to line and level with accurate angles and surfaces and straight sharp edges.

C. Allow for thermal movement resulting from the following maximum change (range) in ambient temperature in the design, fabrication, and installation of installed metal assemblies to prevent buckling, opening up of joints, and overstressing of welds and fasteners. Base design calculations on actual surface temperatures of metals due to both solar heat gain and nighttime sky heat loss. Temperature change (Range): 100 ° F (38 °C).

D. Shear and punch metals cleanly and accurately. Remove burrs.

E. Ease exposed edges to a radius of approximately 1/32” (0.794 mm), unless otherwise indicated. Form bent metal corners to smallest radius possible without causing grain separation or otherwise impairing work.

F. Remove sharp or rough areas on exposed traffic surfaces.

G. Weld corners and seams continuously to comply with AWS recommendations and the following:

1. Use materials and methods that minimize distortion and develop strength and corrosion resistance of base metals.

2. Obtain fusion without undercut or overlap.

3. Remove welding flux immediately.

4. At exposed connections, finish exposed welds and surfaces smooth and blended so that no roughness shows after finishing and contour of welded surface matched those adjacent.

H. Form exposed connections with hairline joints, flush and smooth, using concealed fasteners wherever possible. Use exposed fasteners of type indicated or, if not indicated, Phillips flat-head (countersunk) screws or bolts. Locate joints where least conspicuous.

I. Provide for anchorage of type indicated; coordinate with supporting structure. Fabricate and space anchoring devices to provide adequate support for intended use.

J. Shop Assembly: Preassemble items in shop to greatest extent possible to minimize field splicing and assembly. Disassemble units only as necessary for shipping and handling

limitations. Use connections that maintain structural value of joined pieces. Clearly mark units for reassembly and coordinated installation.

K. Cut, reinforce, drill and tap miscellaneous metal work as indicated to receive finish hardware, screws, and similar items.

L. Fabricate joints that will be exposed to weather in a manner to exclude water, or provide weep holes where water may accumulate.

2.09 ROUGH HARDWARE

A. Furnish bent or otherwise custom fabricated bolts, plates, anchors, hangers, dowels, and other miscellaneous steel and iron shapes as required. Fabricate items to sizes, shapes, and dimensions required.

2.10 STEEL LADDERS

A. General: Exterior fixed ladders shall meet OSHA requirements found in 29CFR1910.27, with the exception that #6 rebar is not to be used. Fabricate ladders for the locations shown, with dimensions, spacing's, details and anchorages as indicated. Comply with requirements of ANSI A14.3 where conflicts occur, comply with the more stringent requirements.

B. Side Rails: Continuous steel flat bars, minimum size (cross section) 2½" x ⅜" (63.5 mm x 9.5 mm), with eased edges, spaced 18" (0.46 m) apart.

C. Bar Rungs: Round steel bars, minimum ¾" (19.1 mm) diameter spaced no greater than 12" (305 mm) o.c. and uniform throughout the length of the ladder. Individual metal rungs embedded in concrete which serve as access to pits and other areas under floors, should have a minimum diameter of 1" (25 mm) or shall otherwise be treated to resist corrosion and rusting.

D. Fit rungs in centerline of side rails, plug weld and grind smooth on outer rail faces.

E. Support each ladder at top and bottom and at intermediate points spaced not more than 5'-0" (1.5 m) o.c. by means of welded brackets, unless otherwise indicated.

1. Size brackets to support design dead and live loads indicated and to hold centerline of ladder rungs clear of the wall surface by not less than 7" (178 mm).

2. Extend side rails 42" (1.1 m) above top rung, and return rails to wall or structure unless other secure handholds are provided. If the adjacent structure does not extend above the top rung, goose-neck the extended rails back to the structure to provide secure ladder access.

2.11 LADDER SAFETY CAGES

A. General: Fabricate ladder safety cages to comply with requirements of ANSI A14.3; where conflicts occur, comply with the more stringent requirements. Assemble safety cages by welding.

B. Primary Hoops: Steel bars, 3" x ¼" (76 mm x 6.4 mm), for top, bottom, and for cages longer than 20' (6.1m), intermediate hoops spaced not more than 20'-0" (6.1 m) o.c.

C. Secondary Intermediate Hoops: Steel bars, 2" x ¼" (51 mm x 6.4 mm) hoops spaced not more than 4'-0" (1.2 m) o.c. between primary hoops.

D. Vertical Bars: Steel bars, 1½" x ¼" (38.1 mm x 6.4 m), secured to each hoop, spaced at intervals not more than 40° (0.7 rad) o.c. around the circumference of the cage, maximum spacing of approximately 9½" (241mm) o.c.

E. Fasten assembled safety cage to ladder rails and adjacent construction as indicated.

2.12 MISCELLANEOUS METAL ITEMS

A. Miscellaneous Framing and Supports: Provide steel framing and supports for applications indicated, which are not parts of structural steel framework, as required to complete work.

1. Fabricate units to sizes, shapes, and profiles indicated and required to receive adjacent other construction retained by framing and supports. Fabricate from structural steel shapes, plates, and steel bars of welded construction using mitered joints for field connection. Cut, drill, and tap units to receive hardware, hangers, and similar items.

2. Equip units with integrally welded anchors for casting into concrete or building into masonry. Furnish inserts if units must be installed after concrete is placed. Except as otherwise indicated, space anchors 24” (61 cm) o.c. and provide minimum anchor units in the form of steel straps 1¼" wide x ¼" x 8" long (31.8 mm x 6.4 mm x 203 mm).

B. Miscellaneous Steel Trim: Provide shapes and sizes indicated for profiles shown. Unless otherwise indicated, fabricate units from structural steel shapes, plates, and steel bars, with continuously welded joints and smooth exposed edges. Use concealed field splices wherever possible. Provide cutouts, fittings, and anchorages as required for coordination for assembly and installation with other work.

2.13 METAL BAR GRATINGS

A. General: Produce metal bar gratings of description indicated per NAAMM marking system that complies with the following:

1. Metal Bar Grating Standard: "Standard Specifications for Metal Bar Grating and Metal Bar Grating Treads" published in ANSI/NAAMM MBG 531.

2. Heavy Duty Metal Bar Grating Standard: "Guide Specifications for Heavy Duty Metal Bar Grating" published in ANSI/NAAMM MBG 532.

B. If gratings are located in walking surfaces, gratings shall have spaces no greater than ½” (12.7 mm) wide in one direction. If gratings have elongated openings, then they shall be placed so that the long dimension is perpendicular to the dominant direction of travel.

C. Fabricate steel gratings to comply with requirements as indicated on the drawings.

D. Traffic Surface for Steel and Aluminum Bar Gratings: Plain, unless otherwise indicated.

E. Steel Finish: Shop prime paint applied in accordance with manufacturer's standard practice.

F. Aluminum Finish: Mill (as fabricated), unless otherwise indicated.

G. Fabricate removable grating sections with banding bars attached by welding to entire perimeter of each section. Include anchors and fasteners of type indicated, or if not indicated, as recommended by manufacturer, for attachment to supports.

1. Heavy Duty Grating: Provide not less than 4 anchor blocks, ¼” (6.4 mm) minimum thickness, for each section of grating composed of bearing bars over 3/16” (4.8 mm) in thickness, with each block shop welded to 2 bearing bars.

2. Non-heavy Duty Grating: Provide not less than 4 saddle clips for each grating section composed of rectangular bearing bars 3/16” (4.8 mm) or less in thickness and spaced not less than 15/16” (23.8 mm) o.c., with each clip designed and fabricated to fit over 2 bearing bars. Furnish threaded bolts with nuts and washers for each clip required, unless otherwise indicated.

H. Attach toe plates to grating by welding, unless otherwise indicated. Toe plate height: 4” (102 mm), unless a greater height indicated. Fabrications

I. Fabricate cutouts in grating sections for penetrations indicated. Arrange layout of cutouts to permit grating removal without disturbing items penetrating gratings.

1. Edge band openings in grating that interrupt 4 or more bearing bars with bars of same size and material as bearing bars.

2. Do not notch bearing bars at supports to maintain elevation.

J. Available Manufacturers: Subject to compliance with requirements, manufacturers offering metal bar gratings that may be incorporated in the work include, but are not limited to, the following:

1. Alabama Metal Industries Corp

2. Barnet/Bates Corp

3. Big D Metals

4. McNichols

2.14 STEEL PIPE GUARDRAILS AND HANDRAILS

A. General: Fabricate pipe guardrails and handrails to comply with requirements indicated for dimensions, details, finish, and member sizes, including wall thickness of pipe, post spacing's, and anchorage.

B. Interconnect guardrails and handrail members by butt-welding or welding with internal connectors, at fabricator's option, unless otherwise indicated. At tee and cross intersections, cope ends of intersecting members to fit contour of pipe to which end is joined, weld all around and grind smooth.

C. Form changes in directions of railing members as follows:

1. By use of welded prefabricated steel elbow fittings

2. By bending, of radius indicated

3. By mitering at elbow bends

D. Form simple and compound curves by bending pipe in jigs to produce uniform curvature for each repetitive configuration required; maintain cylindrical cross- section of pipe throughout entire bend without buckling, twisting, cracking, or otherwise deforming exposed surfaces of pipe.

E. Provide wall returns at ends of wall-mounted handrails, unless otherwise indicated.

F. Close exposed ends of pipe by welding 3/16" (4.8 mm) thick steel plate in place or by use of prefabricated fittings, except where clearance of end of pipe and adjoining wall surface is ¼" (6.4 mm) or less.

G. Toe Boards: Where indicated, provide toe boards at railings around openings and at the edge of open-sided floors and platforms. Fabricate to dimensions and details indicated, or if not indicated, use 4 inches high x ¼" (102 mm x 6.4 mm) steel bar welded to each railing post.

H. Brackets, Flanges, Fittings, and Anchors: Provide wall brackets, end closures, flanges, miscellaneous fittings, and anchors for interconnections of pipe and attachment of guardrails and handrails to other work. Furnish inserts and other anchorage devices for connecting guardrails and handrails to concrete or masonry work.

1. For railing posts set in concrete, fabricate sleeves from steel pipe not less than 6" (152 mm) long and with an inside diameter not less than ½" (12.7 mm) greater than the outside diameter of post, with steel plate closure welded to bottom of sleeve.

2. For removable railing posts, fabricate slip-fit sockets from steel pipe whose inside diameter is sized for a close fit with posts and to limit deflection of post without lateral load, measured at top, to not more than 1/12” of post height. Provide socket covers designed and fabricated to resist accidental dislodgement.

I. Fillers: Provide steel sheet or plate fillers of thickness and size indicated or required to support structural loads of handrails where needed to transfer wall bracket loads through wall finishes to structural supports. Size fillers to suit wall finish thicknesses. Size fills to produce adequate bearing to prevent bracket rotation and overstressing of substrate.

2.15 STEEL FRAMED STAIRS

A. General: Construct stairs to conform to sizes and arrangements indicated with welded connections, unless otherwise indicated. Provide complete stair assemblies, including metal framing, hangers, columns, railings, newels, balusters, struts, clips, brackets, bearing plates, and other components necessary for the support of stairs and platforms, and as required to anchor and contain the stairs on the supporting structure.

1. Fabricate treads and platforms of exterior stairs to accommodate slopes to drain in finished traffic surfaces.

B. Stair Framing: Fabricate stringers of structural steel channels, or plates, or a combination thereof, as indicated. Provide closures for exposed ends of stringers. Construct platforms of structural steel channel headers and miscellaneous framing members as indicated. Bolt or weld headers to stringers, newels, and framing members to stringers and headers; fabricate and join so that bolts, if used, do not appear on finish surfaces.

C. Metal Pan Risers, Sub-treads, and Sub-platforms: Shape metal pans for risers and sub-treads to conform to configuration shown. Provide thickness of structural steel sheet for metal pans as indicated.

1. Form metal pans of uncoated cold-rolled steel sheet, unless otherwise indicated.

2. Form metal pans of galvanized steel sheet, where indicated on the drawings.

3. Attach Risers and Sub-treads to Stringers by the following methods:

a) Directly weld risers and sub-treads to stringers; locate welds on side of metal pans to be concealed by concrete fill.

b) Attach by means of brackets made of steel angles or bars. Weld brackets to stringers and attach metal pans to brackets by welding or bolting.

4. Provide sub-platforms of configuration and construction shown, with thickness of structural steel sheet as indicated. Attach sub-platform to platform framing members with welds or as otherwise indicated. Construct sub-platforms with smooth soffits.

D. Steel Floor Plate Treads and Platforms: Provide raised pattern steel floor plate in pattern indicated or, if not indicated, as selected from manufacturer's standard patterns.

1. Form treads of ¼” (6.4 mm) thick raised pattern steel floor plate with integral nosing and back edge stiffener. Weld steel supporting brackets to stringers and treads to brackets.

2. Fabricate platforms of raised pattern steel floor plate of thickness indicated. Provide nosing matching that on treads at all landings. Secure to platform framing members with welds.

E. Floor Grating Treads and Platforms: Provide patterns, spacing, and bar sizes indicated; fabricate to comply with NAAMM MBG 531.

1. Finish being shop prime paint, unless otherwise indicated.

2. Fabricate grating treads with steel plate nosing on one edge and with steel angle or steel plate carrier at each end for stringer connections. Secure treads to stringers with bolts or as otherwise indicated.

3. Fabricate grating platforms, with nosing matching that on grating treads, at all landings. Provide toe plates at open-sided edges of grating platform. Secure grating to platform frame with welds or as otherwise indicated.

F. Stair Guardrails and Handrails: Comply with applicable requirements specified elsewhere in this section for steel pipe guardrails and handrails, and as follows:

1. Fabricate newels of steel tubing and provide newel caps of gray-iron castings, as shown.

2. Railings may be bent at corners, rail returns, and wall returns, instead of using prefabricated fittings.

3. Connect railing posts to stair framing by direct welding, unless otherwise indicated.

2.16 PIPE BOLLARDS

A. Fabricate pipe bollards from 4” (102 mm) standard black steel pipe, Schedule 40, unless otherwise indicated. Cap bollards with ¼” (6.4 mm) minimum thickness steel base plate, or as otherwise indicated.

2.17 FINISHES

A. General: Comply with NAAMM AMP 500 "Metal Finishes Manual" for recommendations relative to application and designations of finishes.

B. Finish metal fabrications after assembly.

2.18 STEEL AND IRON FINISHES

A. General: Shop-paint uncoated surfaces of metal fabrications, except those to be embedded in concrete or masonry or to receive sprayed-on fireproofing, surfaces and edges to be welded, and galvanized surfaces, unless otherwise indicated. Comply with requirements of SSPC-PA 1 for shop painting.

B. Galvanizing: For those items indicated for galvanizing, apply zinc-coating by the hot- dip process in compliance with the following requirements:

1. ASTM A123 for galvanizing both fabricated and non-fabricated iron and steel products made of uncoated rolled, pressed, and forced shapes, plates, bars, and strip 0.0299” (0.7595 mm) thick and heavier.

2. ASTM A153 for galvanizing iron and steel hardware.

C. Surface Preparation for Shop Priming: Prepare uncoated ferrous metal surfaces to comply with minimum requirements indicated below.

1. Remove oil, grease and similar contaminants in accordance with SP-1, "Solvent Cleaning".

2. Remove loose rust, scale, spatter, slag and other deleterious materials in accordance with SSPC.

D. Painting: Immediately after surface preparation, apply structural steel primer paint in accordance with manufacturer's instructions and at a rate to provide dry film thickness of not less than 3.0 mils (0.076 mm). Use painting methods that result in full coverage of joints, corners, edges, and exposed surfaces. Apply 2 coats of paint to surfaces that are inaccessible after assembly or erection.

2.19 ALUMINUM FINISH

A. Mill (as fabricated) finish, unless otherwise indicated.

PART 3 - EXECUTION

3.01 EXAMINATION

A. Installer shall examine the areas and conditions under which metal fabrication items are to be installed. Notify the Architect in writing of conditions detrimental to the proper and timely completion of the work. Do not proceed with the work until unsatisfactory conditions have been corrected in a manner acceptable to the Installer and Architect.

3.02 PREPARATION

A. Coordinate and furnish anchorages, setting drawings, diagrams, templates, instructions, and directions for installation of anchorages, including concrete inserts, sleeves, anchor bolts, and miscellaneous items having integral anchors that are to be embedded in concrete or masonry construction. Coordinate delivery of such items to project site.

B. Center nosing's on tread widths with noses flush with riser faces and tread surfaces.

C. Set sleeves in concrete with tops flush with finish surface elevations; protect sleeves from water and concrete entry.

3.03 INSTALLATION - GENERAL

A. Fastening to In-Place Construction: Provide anchorage devices and fasteners where necessary for securing miscellaneous metal fabrications to in-place construction; include threaded fasteners for concrete and masonry inserts, toggle bolts, and through-bolts, lag bolts, wood screws and other connectors as required.

B. Cutting, Fitting and Placement: Perform cutting, drilling, and fitting required for installation of miscellaneous metal fabrications. Set metal fabrication accurately in location, alignment, and elevation; with edges and surfaces level, plumb, true, and free of rack; and measured from established lines and levels.

C. Provide temporary bracing or anchors in formwork for items that are to be built into concrete masonry or similar construction.

D. Fit exposed connections accurately together to form hairline joints. Weld connections that are not to be left as exposed joints, but cannot be shop-welded because of shipping size limitations. Do not weld, cut, or abrade the surfaces of exterior units which have been hot-dip galvanized after fabrication, and are intended for bolted or screwed field connections.

E. Field Welding: Comply with AWS Code for procedures of manual shielded metal- arch welding, appearance and quality of welds made, methods used in correcting welding work, and the following:

1. Use materials and methods that minimize distortion and develop strength and corrosion resistance of base metals.

2. Obtain fusion without undercut or overlap.

3. Remove welding flux immediately.

4. At exposed connections, finish exposed welds and surfaces smooth and blended so that no roughness shows after finishing and contour of welded surfaces matches those adjacent.

F. Grout: Follow manufacturer's recommendations for substrate preparation and application.

G. Corrosion Protection: Coat concealed surfaces of aluminum that will come into contact with grout, concrete, masonry, wood, or dissimilar metals with a heavy coat of bituminous paint or zinc chromate primer.

3.04 INSTALLATION OF METAL BAR GRATINGS

A. General: Install gratings to comply with requirements of NAAMM grating standard that apply to grating types and bar sizes indicated, including installation clearances and standard anchoring details.

B. Secure removable units to supporting members with type and size of clips and fasteners indicated, or if not indicated, as recommended by grating manufacturer for type of installation conditions shown.

C. Secure non-removable units to supporting members by welding where both materials are the same; otherwise, fasten by bolting as indicated above.

D. Attach toe plates to gratings by welding, at locations indicated.

3.05 INSTALLATION OF STEEL PIPE GUARDRAILS AND HANDRAILS

A. Adjust railings prior to anchoring to ensure matching alignment at abutting joints. Space posts at spacing indicated, or if not indicated, as required by design loadings. Plumb posts in each direction. Secure posts and railing ends to building construction as follows:

1. Anchor posts in concrete by means of pipe sleeves preset and anchored into concrete. After posts have been inserted into sleeves, fill annular space between post and sleeve solid with non-shrink, nonmetallic grout, mixed and placed to comply with anchoring material manufacturer's directions.

2. Anchor posts and rail ends to steel with welded connections, unless otherwise indicated.

3. Anchor posts and rail ends into concrete and masonry with steel round flanges welded to post and rail ends, and anchored into wall construction with expansion shields and bolts.

4. Install removable railing sections where indicated in slip-fit metal sockets cast into concrete.

5. Accurately locate sockets to match post spacing.

B. Secure handrails to wall with wall brackets and end fittings. Provide bracket with not less than 1½” (38.1 mm) clearance from inside face of handrail and finished wall surface. Locate brackets at spacing not less than 5'-0" (1.5 m) o.c., unless otherwise indicated. Secure wall brackets and wall return fittings to building construction as follows:

1. Use type of bracket with flange tapped for concealed anchorage to threaded hanger bolt.

2. For concrete and solid masonry anchorage, use drilled-in expansion shield and either concealed hanger bolt or exposed lag bolt, as applicable.

3. For hollow masonry anchorage, fasten brackets directly on masonry wall using toggle bolts.

4. For steel framed gypsum board assemblies, fasten brackets to wood blocking using lag bolts or to metal blocking using self-tapping screws, of size and type required to support structural loads.

C. Expansion Joints: Provide expansion joints at locations indicated, or if not indicated, at intervals not to exceed 40’ (12.2 m). Provide slip joint with internal sleeve extending 2”

(51 mm) beyond joint on either side; fasten internal sleeve securely to one side; locate joint within 6” (152mm) of posts.

3.06 INSTALLATION OF PIPE BOLLARDS

A. General: Install bollards at locations shown on drawings. After installation, fill pipe with concrete and provide a smooth convex curve at the top of the pipe.

B. Backfill: The backfill in the annular space around bollards not embedded in poured footings shall be by the following methods:

1. Clean excess soil from hole. Do not leave loose soil at bottom of hole.

2. Backfill shall be of concrete with an ultimate strength of 3,000 pounds per square inch (210.92 kgs/sq.cm) at 28 days. The hole shall not be less than 4” (101.6 mm) larger than the diagonal dimension of a round, square or rectangular bollard.

3.07 ADJUSTING AND CLEANING

A. Touch-Up Painting of Steel Items: Immediately after erection, clean field welds, bolted connections, abraded areas of shop paint, and paint exposed areas with same material as used for shop painting to comply with SSPC-PA 1 requirements for touch- up of field painted surfaces. Apply by brush or spray to provide a minimum dry film thickness of 3.0 mils (0.076 mm).

B. For galvanized surfaces clean welds, bolted connections and abraded areas and apply galvanizing repair paint to comply with ASTM A780.

END OF SECTION

SECTION 05 55 00
STAIR TREADS AND NOSINGS

PART 1 - GENERAL

1.1 SUMMARY

A. Section Includes:
   1. Precast concrete stair treads.
   2. Cast metal stair nosings.
   3. Extruded aluminum stair nosings
   4. Supplementary components and accessories normally furnished or necessary for a complete installation, whether or not such items are indicated on the Drawings or included in the Specifications.

1.2 SECTION REQUIREMENTS

A. Submittals: Submit product data, shop drawings, and samples.

PART 2 - PRODUCTS

2.1 PRECAST CONCRETE STAIR TREADS

A. Manufacturers: Provide products manufactured by one of the following, or equal.
   1. Stepstone, Inc.
   2. Concrete Designs Inc.

B. Requisite Properties:
   1. Style: Modern.
   2. Color: Match Stepstone color #501, “GRANADA WHITE” or color #1804, “FRENCH GRAY”.
   3. Finish. Light sandblast.
   4. Nosing: Provide integral aggregate black stripe.

2.2 CAST METAL STAIR NOSINGS

A. Description: Cast metal abrasive stair nosings.

B. Application: Used at cast-in-place concrete stairs.

C. Products: Provide one of the following, or equal.
   1. “Style 801” manufactured by American Safety Tread Co., Inc.
   2. “CF-300” manufactured by Balco USA.
   3. “SuperTread Type C-01” manufactured by Grating Pacific, Inc.

D. Requisite Properties:
   1. Minimum Width: At least 3 inches wide.
   2. Nominal Length: Match stair tread width, less 3 inches clearance.

3. Minimum Thickness: At least 5/16-inch thick.
4. Surface: Cross hatched.

E. Materials: Gray iron castings conforming to ASTM A 48, minimum Class No. 35 sand finish castings with abrasive embedded to a minimum depth of at least 1/16-inch in the wear surface; and at least1/16-inch clean and well-defined cross hatching. Provide the manufacturer's standard shop-applied black paint finish.

2.3 EXTRUDED ALUMINUM STAIR NOSINGS

A. Description: Single-component abrasive stair nosing assemblies consisting of an extruded aluminum base container with integral anchoring lugs or studs, and an abrasive filler.

B. Application: Used at concrete filled metal pan stairs.

C. Products: Provide one of the following, or equal.
1. Ribbed Abrasive Products:
   a. "Type 9511" manufactured by American Safety Tread Co.
   b. "Type R-315P" manufactured by Balco USA.
   c. "SuperTread Type XRS-3" manufactured by Grating Pacific, Inc.
2. Full Abrasive Products:
   a. "Type BF-311D" manufactured by American Safety Tread Co.
   b. "Type HS-338" manufactured by Balco USA.
   c. "SuperTread Type XSS-3-BF" manufactured by Grating Pacific, Inc.

D. Requisite Properties:
1. Width: 3 inches wide.
2. Nominal Length: Match stair tread width, less 1/8-inch clearance.
3. Minimum Lip: At least 3/8-inch.
4. Minimum Thickness: At least 1/4-inch thick.
5. Color: Black.

E. Materials:
1. Aluminum Base Container: ASTM B 221 Alloy 6061-T5 or Alloy 6063-T5; provide manufacturer's standard mill finish with clear acrylic lacquer coated for components embedded in concrete.
2. Abrasive Filler: Aluminum oxide and silicon carbide granules mixed into an integral-color 2-part epoxy matrix. Abrasives with cementitious-based resins are prohibited.

2.4 ACCESSORIES

A. Fastenings: Provide backings, inserts, loose connection hardware, fasteners, anchors, attachments, connectors, and other items supplied, required, recommended, or accepted by the manufacturer for actual in-service conditions applicable to the project.

B. Other Accessories: Provide accessories and secondary items normally furnished or necessary for a complete installation; or supplied, required, recommended, or accepted by the manufacturer for actual in-service conditions applicable to the project.

PART 3 - EXECUTION

3.1 INSTALLATION REQUIREMENTS

A. General:
   1. Ensure proper supervision practices are followed at the project site before the installer begins work and at all times during installation.
   2. Verify in-place supporting and adjacent construction conforms to the manufacturer's requirements or recommendations, and satisfies all other conditions that might affect the quality of installation or the durability, appearance, or performance of installed treads and nosings and adjacent items.
   3. Install treads and nosings using materials and methods required, recommended, or accepted by the manufacturer, along with manufacturer-recommended accessories and techniques.
   4. Set items true to line, to required levels and lines, and plumb, level, and square, without warp or rack, with flush well-fitted joints, and in alignment with adjacent construction.
   5. Securely attach treads and nosings in place to supporting construction.
   6. Installed treads and nosings must be warrantable. Do not install, correct, or replace treads and nosings in a manner that results in any warranty or guarantee becoming void.

B. Installation Tolerances: Install treads and nosings to an allowable tolerance variation of not more than 1/4-inch from true position and not more than 1/8-inch and from plumb, level, and alignment.

C. Correction and Repair:
   1. Correct deficiencies that do not conform to the Contract Documents.
   2. Repair non-conforming, damaged and defective work.
   3. Replace soiled items that cannot be cleaned to the same condition as new.

D. Protection:
   1. Protect installed treads and nosings in place from soiling, deterioration, and damage until Substantial Completion.
   2. Remove protection when it's no longer needed and before Substantial Completion.

END OF SECTION

©AWCWEST 18E22 All rights reserved.

SECTION 05 73 00
DECORATIVE METAL RAILINGS

PART 1 - GENERAL

1.01 SUMMARY

A. Section Includes:
   1. Shop-fabricated decorative metal railings.
   2. Supplementary components and accessories normally furnished or necessary for a complete installation, whether or not such items are indicated on the Drawings or included in the Specifications.

B. Related Requirements:
   1. Section 05 05 13 for shop-applied primer.
   2. Section 05 05 23 for non-structural metal fastenings.
   3. Section 05 50 00 for dissimilar metal corrosion protection.

1.02 SECTION REQUIREMENTS

A. Delegated Design Requirements:
   1. Engineer, fabricate, assemble, and install metal railings that conform to the profiles indicated and other Contract Document requirements; meets specified performance criteria; and result in structurally sound non-corroding assemblies that accommodate, resist, distribute, or transfer in-service loads without incipient or catastrophic failure.
   2. Maintain visual design concept indicated, including sizes, profiles, and alignments. Deviation from visual design concept is non-conforming work and prohibited without prior written acceptance by the Architect.

B. Qualifications:
   1. Fabricator: Company or individuals must have at least 10 years' experience fabricating metal railings installed on at least 100 previous projects similar to this project in size, material, design, and complexity
   2. Installer: Company or individuals must have at least 5 years' experience installing metal railings for at least 30 previous projects similar to this project in size, material, design, and complexity.
   3. Welders: Welding personnel and supervisors must comply with the "*Qualification*" requirements of AWS quality standard publications. Only certified welders current in their certification may perform or supervise any welding work.
   4. Supervisors: Individuals must have at least 7 years' experience installing metal railings for at least 30 previous projects similar to this project in size, material, design, and complexity, including at least 2 years' supervisory experience directing and leading metal railing installers.
   5. Engineer: Must be a licensed professional structural engineer registered to practice in California having at least 10 years' experience performing the kind of engineering services indicated for at least 20 previous projects similar to this project in size, material, design, and complexity.

C. Submittals: Submit product data, shop drawings, written descriptions of specified qualifications, and delegated design submittals.

PART 2 - PRODUCTS

2.01 METAL RAILINGS

A. Posts and Rails: Indicated on the Drawings.

B. Infill: Indicated on the Drawings.

C. Handrails: Fabricate from at least 0.1196-inch BMT (MSG 11) steel mechanical tubing.

D. Guardrail Brackets: Indicated on the Drawings.

E. Wall Handrail Brackets: “1701-2” cast ductile iron wall mount handrail bracket, Style U, with a projection of 2-1/2 inches from wall to center of handrail, and one 3/8-16 tapped mounting hole for use with flat or round handrail, unfinished; manufactured by R&B Wagner, Inc., or equal. Provide “B1416” anchor plate; or “1722” wall mount filler for 5/8-inch drywall where required to prevent crushing finish material.

2.02 MATERIALS

A. Steel:
1. Steel Plate: ASTM A 36 (mild steel).
2. Uncoated Steel Coil, Sheet, and Strip: Finished cold-rolled steel coil, sheet, and strip conforming to ASTM A 1008, CS Type B (commercial steel), unexposed (interior items) and exposed, temper rolled (exterior items), regular matte finish (40 to 59 AA), mill phosphatized.
3. Hot-Rolled Steel Rods, Bars, and Shapes: ASTM A 36 (mild steel), merchant quality.
4. Steel Pipe: ASTM A 53, black pipe, Type and Grade as indicated below, size and weight class, schedule number, or outside diameter indicated and wall thickness as required by engineering calculations for type of use indicated.

    a. Appearance: Type S (seamless).

    b. Bending: Provide Grade A pipe when cold bending is required; otherwise provide Grade B pipe.

5. Steel Structural Tubing: ASTM A 500, Grade A, black, round or shaped hot-formed tubing as indicated, outside diameter or dimensions as indicated, and calculated wall thickness as required by engineering calculations for type of use indicated. Provide seamless tubing.
6. Mechanical Tubing: ASTM A 513, black, Type 5 M.D. (mandrel drawn or Drawn over a Mandrel).

B. Stainless Steel;
1. Stainless Steel Bars, Hot-Rolled or Extruded Shapes: ASTM A 276, Condition T (hardened and tempered at a relatively high temperature), Type 304L (for welded applications) or Type 304 (for all other applications) No. 4 (directional) finish, passivated in conformance with ASTM A 967.
2. Stainless Steel Pipe: ASTM A 312, Grade TP (pipe), Type 304L (for welded applications) or Type 304 (for all other applications) No. 4 (directional) finish, passivated in conformance with ASTM A 967.
3. Stainless Steel Plate and Flat Bar:

    a. Exposed Locations: ASTM A 666 (annealed and tempered), Type 304L (for welded applications) or Type 304 (for all other applications) No. 2 (half hard) temper (hardness

between Rockwell B-65 and B-70; can be bent 90 degrees across the direction of rolling around a radius equal to its thickness), passivated in conformance with ASTM A 967.

b. Concealed Locations: ASTM A 240 (annealed) Type 304L (for welded applications) or Type 304 (for all other applications), No. 2 (half hard) temper (hardness between Rockwell B-65 and B-70; can be bent 90 degrees across the direction of rolling around a radius equal to its thickness), passivated in conformance with ASTM A 967.

4. Stainless Steel Tubing: ASTM A 554, Grade MT (tubing), Type 304L (for welded applications) or Type 304 (for all other applications), No. 4 (directional) finish, passivated in conformance with ASTM A 967.

C. Aluminum:

1. Standard Structural Profiles (Alloy 6061-T6): ASTM B 308.
2. Extruded Bars, Shapes and Tubes:

a. Standard Structural Profiles (Alloy 6061-T6): ASTM B 308.

b. Extruded Aluminum Bars and Shapes: ASTM B 221.

1) Alloy and Temper: 6063-T5 or T6 for primary components; 6063-T5 or T6, 6005-T5, 6105-T5 or 6061-T6 for structural components.

2) Minimum Thickness: At least 0.125-inch.

3. Sheet and Plate: ASTM B 209.

a. Alloy and Temper: 5005-H32 (for anodic finishing), or alloy 3003-H14 (for painted or unfinished sheet).

b. Minimum Thickness: At least 0.060-inch.

4. Aluminum Tubing:

a. Seamless Drawn Aluminum Tubes: ASTM B 210.

b. Extruded Aluminum Tubes: ASTM B 221 or ASTM B 483.

2.03 ACCESSORIES

A. Fastenings: Provide backings, inserts, loose connection hardware, fasteners, anchors, attachments, connectors, and other items supplied, required, recommended, or accepted by the manufacturer for actual in-service conditions applicable to the project.

B. Flanges and Anchors: Unless otherwise indicated, provide cast or formed metal of the same type, material, and finish as the supported metal fabrications.

C. Grout:

1. Description: Pre-packaged, non-shrink, non-metallic, non-corrosive, non-staining, non-gaseous grout conforming to ASTM C 1107, Grade A (drypack) and Grades B and C (flowable grout) of a consistency suitable for application within a 30-minute working time.
2. Type: Grout specifically recommended by the manufacturer for interior and exterior applications.
3. Minimum 28-day Compressive Strength: At least 7,500 pounds per square inch.

D. Other Accessories: Provide accessories and secondary items normally furnished or necessary for a complete installation; or supplied, required, recommended, or accepted by the manufacturer for actual in-service conditions applicable to the project.

2.04 FINISHES

A. Hot-Dip Galvanizing: Specified in Section 05 05 12.

B. Shop Priming: Specified in Section 05 05 13.

PART 3 - EXECUTION

3.01 INSTALLATION REQUIREMENTS

A. General:
   1. Ensure proper supervision practices are followed at the project site before the installer begins work and at all times during installation.
   2. Verify that in-place construction conforms to the manufacturer's requirements or recommendations and satisfies all other conditions that might affect the quality of installation or the durability, appearance, or performance of installed items
   3. Set metal railings true to line, to required levels and lines, plumb, square, and cut and fitted without warp or rack; sloped or level as required; with flush well-fitted joints; and in alignment with adjacent construction.
   4. Shim as required with concealed shims.
   5. Dry-pack metal railings supported on concrete and masonry to provide firm, level bearing surfaces.
   6. Provide temporary bracing or anchors for items indicated as built into concrete, masonry, or similar construction.
   7. Fit exposed connections accurately to form flush hairline joints.
   8. Securely attach metal railings in place to supporting construction.

B. Installation Tolerances: Install metal railings to an allowable tolerance variation of not more than 1/4-inch from true position and not more than 1/8-inch and from plumb, level, and alignment.

C. Correction and Repair:
   1. Correct deficiencies that do not conform to the Contract Documents.
   2. Repair non-conforming, damaged, and defective work.

D. Protection:
   1. Protect installed metal railings in place from deterioration and damage until Substantial Completion.
   2. Remove protection when it's no longer needed and before Substantial Completion.

END OF SECTION

©AWCWEST 18E22 All rights reserved.
TAGDSC, ELMTB, CLSB1080, CLSB2080, ELMTC, CLSC1090, ELMTG, CLSG2060

SECTION 05 78 00
METAL FABRIC

PART 1 - GENERAL

1.01 SUMMARY

A. Section Includes:
   1. Welded wire mesh.
   2. Woven wire mesh.
   3. Perforated sheet metal.
   4. Supplementary components and accessories normally furnished or necessary for a complete installation, whether or not such items are indicated on the Drawings or included in the Specifications.

1.02 SECTION REQUIREMENTS

A. Submittals: Submit product data, shop drawings, samples.

PART 2 - PRODUCTS

2.01 WELDED WIRE MESH

A. Manufacturers: Provide products manufactured by WireCrafters LLC, or equal.

B. Requisite Properties:
   1. Construction: Welded wire.
   2. Material: Aluminum.
   3. Wire Diameter: 0.080-inch.
   4. Wire Spacing: Square configuration with 1/4-inch center-to-center wire spacing.
   5. Sizes: Indicated on the Drawings.

2.02 WOVEN WIRE MESH

A. Manufacturers: Provide products manufactured by WireCrafters LLC, or equal.

B. Requisite Properties:
   1. Construction: Woven wire, manufactured with Type IC (intercrimp) style.
   2. Material: Steel galvanized before being woven.
   3. Wire Diameter: 0.187-inch.
   4. Wire Spacing: Square configuration with 1/4-inch center-to-center wire spacing.
   5. Sizes: Indicated on the Drawings.

2.03 PERFORATED SHEET METAL

A. Manufacturers: Provide products manufactured by one of the following, or equal.
   1. McNichols Co.

2. Harrington & King Perforating Co.

B. Requisite Properties:
1. Material: Aluminum.
2. Perforation Size and Shape: 1/8-inch diameter round perforations.
3. Perforation Arrangement: Staggered.
4. Perforation Spacing: 2 inches on center.
5. Minimum Open Area: At least 40 percent.

2.04 ACCESSORIES

A. Fastenings: Provide backings, inserts, loose connection hardware, fasteners, anchors, attachments, connectors, and other items supplied, required, recommended, or accepted by the manufacturer for actual in-service conditions applicable to the project.

B. Other Accessories: Provide accessories and secondary items normally furnished or necessary for a complete installation; or supplied, required, recommended, or accepted by the manufacturer for actual in-service conditions applicable to the project.

PART 3 - EXECUTION

3.01 INSTALLATION REQUIREMENTS

A. General:
1. Ensure proper supervision practices are followed at the project site before the installer begins work and at all times during installation.
2. Verify in-place supporting and adjacent construction conforms to the manufacturer's requirements or recommendations, and satisfies all other conditions that might affect the quality of installation or the durability, appearance, or performance of installed metal fabric and adjacent items.
3. Install metal fabric using materials and methods required, recommended, or accepted by the manufacturer, along with manufacturer-recommended accessories and techniques.
4. Set items true to line, to required levels and lines, and plumb, level, and square, without warp or rack, with flush well-fitted joints, and in alignment with adjacent construction.
5. Securely attach metal fabric in place to supporting construction.
6. Installed metal fabric must be warrantable. Do not install, correct, or replace metal fabric in a manner that results in any warranty or guarantee becoming void.

B. Installation Tolerances: Install metal fabric to an allowable tolerance variation of not more than 1/4-inch from true position and not more than 1/8-inch and from plumb, level, and alignment.

C. Correction and Repair:
1. Correct deficiencies that do not conform to the Contract Documents.
2. Repair non-conforming, damaged and defective work.
3. Replace soiled items that cannot be cleaned to the same condition as new.

D. Protection:
1. Protect installed metal fabric in place from soiling, deterioration, and damage until Substantial Completion.
2. Remove protection when it's no longer needed and before Substantial Completion.

END OF SECTION

©AWCWEST 18E22 All rights reserved.
TAGDSC, ELMTB, CLSB2080, ELMTC, CLSC2020

DIVISION 06

WOOD, PLASTICS, AND COMPOSITES

SECTION 06 10 00
ROUGH CARPENTRY

PART 1 – GENERAL

1.1 SECTION INCLUDES

A. Furnish all labor, material, and equipment required to complete the Work shown on the Drawings and specified herein, including but not limited to the following:
   1. Wood framing.
   2. Blocking, backing, nailers, sleepers and wood grounds required for securing other Work.
   3. Wood furring.
   4. Sheathing.
   5. Sub-flooring.
   6. Under-layment.
   7. Rough Hardware and Connectors.
   8. Installation of Special Connectors, Seats, Plates, Anchors and Hangers furnished by other trades.

1.2 RELATED SECTIONS

A. Section 03 10 00 - Concrete Formwork.

B. Section 03 30 00 – Concrete

C. Section 04 22 00 – Masonry

D. Section 05 12 00 - Structural Steel.

E. Section 0 550 00 – Metal Fabrications

F. Section 05 40 00 - Cold Formed Metal Framing

G. Section 09 25 00 - Gypsum Wallboard.

1.3 SUBMITTALS

A. Comply with pertinent provisions of Section 01 33 00.

B. Certification:
   1. Pressure Treated Wood: Submit certification by treating plant stating chemicals and process used, net amount of preservative retained, and conformance with applicable standards.

1.4 QUALITY ASSURANCE

A. Wood Product Quality Standards:
   1. Lumber Standards: Comply with Product Standards, PS 20, American Softwood Lumber Standards and West Coast Lumber Inspection Bureau (WCLIB).
   2. Plywood Standard: Comply with Product Standards, PS 1, Construction and Industrial Plywood.

3. Pressure Treated Material: American Wood Preservers Association Standards (AWPA).
4. Factory-mark each piece of lumber and plywood with type, grade, mill and grading agency, except omit marking from surfaces to be exposed with transparent finish or without finish.

B. Requirements of Regulatory Requirements:
1. California Building Code (CBC) Chapter 23.

C. Do not use power driven fasteners unless approved by Structural Engineer and the City Inspector.

D. Grade Marking:
1. Lumber: Each piece of lumber shall bear the grade mark of at least one of the two agencies, (WCLIB and WWPA) listed above in accordance to CBC Section 2304 and UBC Standard No. 23-1.
2. Plywood: Each sheet shall bear the grade stamp of the American Plywood Association (APA) in accordance to CBC Section 2303.4 and UBC Standard No. 23-2 or 23-3.

E. Contaminated Lumber:
1. Lumber shall not contain any visible mold, mildew, or moisture related spore producing contamination. Lumber shall be inspected before delivery to the site. Lumber delivered to the site with visible signs of contamination shall be removed from the site and shall not be placed into the building structure in any location. On site or off site bleaching or cleaning of lumber showing contamination is not acceptable. If some pieces are contaminated it is assumed that all units in the stack are contaminated.

1.5 PRODUCT HANDLING

A. Delivery and Storage: Keep materials under cover and dry. Protect against exposure to weather and contact with damp or wet surfaces. Stack lumber as well as plywood and other panels; provide for air circulation within and around stacks and under temporary coverings including polyethylene and similar materials.

1.6 PROJECT CONDITIONS

A. Coordination: Fit carpentry-work to other Work; scribe and cope as required for accurate fit. Correlate location of furring, nailers, blocking, grounds and similar supports to allow attachment of other Work.
1. Cooperate with other trades, especially Concrete, Masonry and Miscellaneous Metal, to prevent duplication of rough hardware furnished.

1.7 LEED REQUIREMENTS

1.1 See Division 1 Section “LEED Requirements” for additional LEED requirements.

1.2 LEED Submittals

1. Credit MR7: Certified Wood:
a. Preferably provide all currently available FSC-Certified wood products for the project.
b. Provide chain of custody documentation.

2. Credit MR 4.1, 4.2 - Recycled Content:
   a. Indicate recycled content; indicate percentage of pre-consumer and post-consumer recycled content per unit of product.
   b. Indicate relative dollar value of recycled content product to total dollar value of product included in project.

PART 2 – PRODUCTS

2.1 LUMBER, GENERAL

A. Grade Stamps: Factory-mark each piece of lumber with grade stamp of inspection agency evidencing compliance with grading rule requirements and identifying grading agency, grade, species, moisture content at time of surfacing, and mill.

B. Nominal sizes are indicated, except as shown by detail dimensions. Provide actual sizes as required by PS 20, for moisture content specified for each use.
   1. Provide dressed lumber, S4S, unless otherwise indicated.
   2. Provide seasoned lumber with 19 percent maximum moisture content at time of dressing and shipment for sizes 2" or less in nominal thickness, unless otherwise indicated.

C. Framing Lumber: Comply with WCLIB, "Standard Grading Rules for West Coast Lumber", No. 17. Stress grades and wood species as noted on Structural Drawings.

2.2 MISCELLANEOUS LUMBER

A. Provide wood for support or attachment of other work including rooftop equipment curbs and support bases, cant strips, bucks, nailers, blocking, furring, grounds, stripping and similar members. Provide lumber of sizes indicated, worked into shapes shown.

B. Light Framing and Standard Grade lumber of any species or board size lumber as required. No. 3 Common or Standard grade boards per WCLIB or WWPA rules or No. 3 boards per SPIB rules.

2.3 CONSTRUCTION PANELS

A. Construction Panel Standards: Comply with PS 1 "U.S Product Standard for Construction and Industrial Plywood" for plywood panels and, for products not manufactured under PS 1 provisions, with American Plywood Association (APA) "Performance Standard and Policies for Structural-Use Panels", Form No. E445.

B. Trademark: Factory-mark each construction panel with APA trademark evidencing compliance with grade requirements.

C. Structural Sheathing: Structural I.

D. Plywood Backing Panels: For mounting electrical or telephone equipment, provide fire-retardant treated plywood panels with grade designation. APA C-D PLUGGED INT with exterior glue, in thickness indicated, or, if not otherwise indicated, not less than 15/32".

2.4 MISCELLANEOUS MATERIALS

A. Fasteners and Anchorages: Provide size, type, material and finish as indicated and as recommended by applicable standards, complying with applicable Federal Specifications for nails, staples, screws, bolts, nuts, washers and anchoring devices. Provide metal hangers and framing anchors of the size and type recommended by the manufacturer for each use including recommended nails.
   1. Where rough carpentry work is exposed to weather, in ground contact, or in area of high relative humidity, provide fasteners and anchorages with a hot-dip zinc coating (ASTM A 153).

2.5 ROUGH HARDWARE

A. Furnish bolts and attachments to other trades for installation in masonry and concrete work.

B. Lag Screws:
   1. General: Conforming to CBC latest edition.
   2. Sizes as indicated on Drawings: Minimum yield point 45,000 psi; minimum tensile strength 77,000 psi.
      a. Dimensions: Standard per Appendix L National Design Specification.
      b. Provide standard cut washer not less in size than screw head, where screw head bears on wood.
      c. Lag screws shall be galvanized where exposed to weather.

C. Washers:
   1. Provide not less than a standard cut washer between bolt head, lag screw head, nut and the wood.
   2. Washers shall be galvanized where exposed to weather.

D. Framing Connectors: "National Design Specifications for Stress Grade Lumber and Its Fastenings", by the NFPA. , Simpson "Strong Tie", or equal, complete with required nails.
   1. Galvanize or shop paint with rust-inhibitive paint.
   2. Model Nos. indicated on Drawings.

2.6 WOOD TREATMENT BY PRESSURE PROCESS

A. Preservative Treatment: Where lumber or plywood is indicated as "Trt-Wd" or "Treated", or is specified herein to be treated, comply with applicable requirements of AWPA Standards C2 (Lumber and C9 Plywood) and of AWPA Standards listed below. Mark each treated item with the AWPA Quality Mark Requirements. Each piece shall bear the stamp of an approved independent agency operating under ALSC overview

B. Preservative Treated Wood Products:
   1. Water-borne salt preservatives for painted, stained, or exposed natural wood product:
      a. AWPA C-2, above ground application.
      b. AWPC LP-22, ground contact application.
   2. Do not use creosote.
   3. Whenever necessary to cut, notch, dap, or drill treated lumber. Paint new surfaces thoroughly with two saturating coats with the preservative material used in the treatment of lumber.
   4. Re-dry items to maximum moisture content of 19%, stamped "dry".
   5. Do not treat Douglas Fir Coast Region with ACC or CCA.

PART 3 - EXECUTION

3.1 INSPECTION

A. Verify that surfaces to receive rough carpentry materials are prepared to require grades and dimensions.

3.2 GENERAL

A. Conduct Work under direction of capable experienced foreman.

B. Accurately locate members to line and dimension. Ensure full contact of timbers framed together. Ensure let-in members in full contact on two surfaces.

C. Discard units of material with defects, which might impair quality of Work, and units, which are too small to use in fabricating Work with minimum joints or optimum joint arrangement.

D. Set carpentry works to required levels and lines, with members plumb and true and cut and fitted.

E. Securely attach carpentry work to substrate by anchoring and fastening as shown and as required by recognized standards.

F. Counter-sink the nail heads on exposed carpentry work and fill holes.

G. Cutting and Fitting: Take care to fit members carefully into their respective positions. Do cutting and fitting in framing required by tradesmen engaged on the operation to enable them to properly carry out their work, but do not curring that may weaken any vital parts of the building. Exercise due care in framing so that structural timbers will not require to be cut for pipes, vents and ducts. Obtain approval of Architect prior to cutting or notching structural members.

H. Bracing and Shoring: Provide all supports, guys and braces, required to stabilize structure during construction.

I. Accurately saw-cut and fit lumber into position and securely nail, spike, lag bolt, or bolt as required.

J. Nailing: Refer to details and tables on Drawings for specific nailing requirements. In absence of specific instructions, use 16d nails for two-inch thick material and 8d for one-inch thick material. Drill nail holes 75% of nail diameter where splitting occurs, and for 20d and larger nails. Replace split or otherwise damaged structural members. Machine applied nailing shall be allowed provided satisfactory installation is demonstrated on the job and the acceptance of the Structural Engineer obtained prior to the use of machine applied nails. Approval is subject to continued satisfactory performance. All "shiners" shall be removed.

K. Bolting: Provide and install all bolts extending through one or more wood members. Drill bolt holes 1/32 inch larger than bolt diameter, with member held in place true to line. Ensure full engagement or nut, but projection of bolt beyond shall not exceed one bolt diameter. Tighten bolts when installed and again immediately before concealing with further construction, or upon completion of Work. Provide malleable iron or steel plate washers under the head and nuts of bolts, where bearing on wood.

L. Lag Screws: Lubricate with soap or other lubricant to facilitate insertion. Turn lag screws into place without driving. Ensure penetration into the lagged member of eight diameters minimum. Provide lead holes for lag screws as follows:
1. Shank Portion - Same diameter and length as shank.
2. Thread Portion - 60-75 percent of shank diameter and at least same length as threaded portion.

Tighten lag screws at installation; carefully retighten just prior to concealing with further construction, or upon completion of Work.

M. Bolts:
1. Machine and carriage bolts conforming to ASTM A 307, Grade A.
   a. Sizes and type as indicated on Drawings.
   b. Provide washers not less in size than bolt heads or nuts bearing on wood.
   c. All bolts, nuts, and washers exposed to weather shall be galvanized in compliance with ASTM A153.

N. Nails:
1. Conforming to CBC Section 2304.8.3.2 and Table 23-II-B-1 (based on Federal Specification FF-N-105B), sizes as indicated on drawings and type as noted below.
   a. Wood framing connections: Bright steel common wire nails. Use galvanized steel common wire nails where connection is exposed.
   b. Plywood floor sheathing to wood framing: Bright steel annulary grooved nails.
   c. Gypsum wallboard to wood framing: Cement coated cooler nails.
   d. Cabinetry: bright steel finishing nails.

O. Wood Screws:
1. Conforming to the NDS (based on Federal Specification FF-N-105B).
   a. Sizes and types as indicated on Drawings.
   b. Screws shall be zinc plated.
   c. Screws shall be of sufficient strength to cause failure in the wood rather than the metal.

3.3 WOOD GROUNDS, NAILERS, BLOCKING AND SLEEPERS

A. Provide wherever shown and where required for screeding or attachment of other Work. Form to shapes as shown and cut as required for true line and level of Work to be attached. Coordinate location with other Work involved.

B. Attach to substrates as required to support applied loading. Counter-sink bolts and nuts flush with surfaces, unless otherwise indicated. Build into masonry during installation of masonry work. Where possible, anchor to formwork before concrete placement.

C. Provide permanent grounds of dressed, preservative treated, key-beveled lumber not less than 1-1/2" wide and of thickness required to bring face of ground to exact thickness of finish material involved. Remove temporary grounds when no longer required.

D. Provide backing and blocking for installation of mechanical, electrical, plumbing, panels, equipment, cabinets, and hardware. Securely nail accurately in position as

required. Use metal framing anchors for connection of blocking and stripping for support of suspended fixtures.

E. Back prime wood bucks and screeds for doors and openings before installation.

F. Securely nail furring and stripping as required, shim accurately to line, level and surface.

3.4 WOOD FURRING

A. Install plumb and level with closure strips at edges and openings. Shim with wood as required tolerance of finished Work.
   1. Fire-stop furred spaces on walls at each floor level and at ceiling line of top story, with wood blocking or noncombustible materials, accurately fitted to close furred spaces.

B. Furring to Receive Plaster Lath: Unless otherwise indicated, provide 1" x 2" furring at 16" o.c., vertically.

C. Suspended Furring: Provide size and spacing shown, including hangers and attachment devices. Level to a tolerance of 1/8" in 10', except 1/4" in 10' for thick-coat plasterwork.

3.5 SILLS AND PLATES

A. Install pressure preservative treated lumber for plates and sills in conformance with CBC latest edition.

3.6 WOOD FRAMING, GENERAL

A. Anchor and nail as shown, and to comply with "Recommended Nailing Schedule"

B. Fire-stop concealed spaces of wood framed walls and partitions at each floor level and at the ceiling line of the top story. Where fire-stops are not automatically provided by the framing system used, use closely fitted wood blocks of nominal 2" thick lumber of the same width as framing members.

3.7 STUD WALLS, PARTITIONS, AND FURRING

A. Provide studs in continuous lengths without splices.

B. Plates: Provide single bottom plate and double top plate unless noted otherwise on drawings and details. Stagger joints four feet in top plates.

C. Nail or anchor plates to supporting construction.

D. Corners and Intersections: Frame with three studs or as detailed.

E. Openings: Frame with double studs each side and double headers placed on edge, resting on cripple studs. Truss or block over headers.

F. Provide continuous horizontal blocking row at mid-height of single-story partitions over eight feet high and at midpoint of multi-story partitions, using two inch thick members of same width as wall or partitions.

G. Cut-in blocks wherever necessary for bracing or backing for applied finish or fixtures. Cut-in two-inch solid blocking between studs at all horizontal joints in non-structural plywood wall sheathing.

H. Provide continuous perimeter backing at ceiling plane for longitudinal forces of wall-secured suspended ceiling system.

3.8 ROOF AND CEILING FRAMING

A. Joists and Rafters: Lay with crowning edge up with full end bearing.

B. Openings: Frame for hatches, vents, and other openings as required.

C. Bridging: Install 2 x 3 bridging at ten feet maximum on centers at joists over eight inches in depth. Install 2 x 3 cross bridging or two inch solid blocking, between roof rafters and ceiling joists. Approved metal cross-bridging nailed using all nail holes may be used in lieu of 2 x 3 bridging. Do not nail bottom of cross bridging at roof rafters until after installation of roof sheathing.

D. Solid Blocking: Install between roof rafters and ceiling joists over partitions and at end supports as indicated.

E. Plywood Roof Sheathing: Install plywood over rafters or decking as indicated on Drawings. Thickness, nailing and layout shall be as indicated on Structural Drawings.

F. Provide special framing as shown for eaves, overhangs, dormers and similar conditions, if any.

3.9 MISCELLANEOUS FRAMING

A. Framing for Mechanical Work:
1. Install where indicated and as required to conceal piping, structural metal work and other unfinished Work where metal furring is not indicated. Furring shall be 2 x studs or as required.
2. Frame members for passage of pipes and ducts to avoid cutting structural members.
3. Do not cut, notch, or bore framing members for passage of pipes or conduits except as detailed on approved Structural Drawings.
4. Reinforce framing members where damaged by cutting

END OF SECTION

SECTION 06 10 53
MISCELLANEOUS ROUGH CARPENTRY

PART 1 - GENERAL

1.01 SUMMARY

A. Section Includes:
   1. Utilitarian lumber and plywood not specified in other sections.
   2. Telephone and electrical equipment backing panels.
   3. Preservative treated wood.
   4. Fire-retardant treated wood.
   5. Rough hardware.
   6. Supplementary components and accessories normally furnished or necessary for a complete installation, whether or not such items are indicated on the Drawings or included in the Specifications.

1.02 SECTION REQUIREMENTS

A. Submittals: Submit product data, shop drawings.

PART 2 - PRODUCTS

2.01 MANUFACTURERS

A. Manufacturer: Provide lumber and plywood manufactured by one of the following, or equal.
   1. Boise Cascade LLC.
   2. Georgia-Pacific Wood Products LLC.
   3. Louisiana-Pacific Corp.
   4. Weyerhaeuser NR Co.

2.02 SAWN LUMBER

A. Timber for Wood Beams, Stair Stringers, and Posts: “SELECT STRUCTURAL” grade Douglas fir conforming to WCLIB Grading Rules, S4S, seasoned to a moisture content of not more than 19 percent, and stamped showing only the appropriate fiber stress in bending “f”.

B. Rough Sawn Lumber: “#1” or “#2” grade Douglas conforming to WCLIB Grading Rules, rough sawn, dried to a moisture content of not more than 19 percent, and stamped “S-DRY” or “KD”.

C. Full-Dimension Lumber: “#1” or “#2” grade Douglas conforming to WCLIB Grading Rules, S4S, seasoned to a moisture content of not more than 19 percent, and stamped “S-DRY” or “KD”.

2.03 SOFTWOOD PLYWOOD

A. Softwood Plywood:
   1. Minimum Sheathing Grade: “APA C-C Plugged & Touch Sanded EXT” grade plywood, unless otherwise indicated. Plywood panels must have a visible APA grade mark.

2. Minimum Underlayment Grade: “APA Tongue & Groove” grade plywood, unless otherwise indicated. Plywood panels must have a visible APA grade mark.
3. Minimum Size: At least 4- by 8-foot nominal sheet size.
4. Minimum Thickness: At least 1/2-inch nominal thickness, unless otherwise indicated.
5. Construction:
    a. 3/4-inch plywood: 7-ply veneer core.
    b. 1/2-inch plywood: 5-ply veneer core.
6. Panel Edges: Square-edged.

B. Telephone and Electrical Equipment Backing Panels:
1. Minimum Grades: “APA Type A-D” grade sanded plywood. Plywood panels must have a visible APA grade mark.
2. Minimum Thickness: At least 3/4-inch nominal thickness, unless otherwise indicated.
3. Construction: 7-ply veneer core.
4. Panel Edges: Square-edged.
5. Finish: Field-applied intumescent white paint finish. Paint both sides of plywood to prevent warping.

2.04 PRESERVATIVE TREATED WOOD (PTW)

A. Description: Wood products conforming to the AWPA U1 manufactured with ACQ wood preservative. PTW containing arsenic or CCA are prohibited.
1. Interior wood construction not in contact with the ground must conform to Use Category UC2.
2. Exterior wood construction not in contact with the ground must conform to Use Category UC3b.
3. Wood contacting the ground must conform to Use Category UC4a.

B. Application: Provide PTW at the following locations and where indicated.
1. Concealed rough carpentry items in contact with concrete or masonry.
2. Miscellaneous wood framing attached directly to the interior of below-grade exterior masonry or concrete walls.
3. Rough carpentry in contact with roofing, metal flashings, vapor retarders or barriers, air barriers, or waterproofing.
4. Wood framing members less than 18 inches above the ground in crawl spaces or unexcavated areas.
5. Wood floor plates installed on concrete slabs-on-grade.
6. Wood items exposed to weather.

C. Products: Provide the following products manufactured by Sunbelt Forest Products Corp., or equal.
1. Termite Resistant Wood: “Timbersave PT”, or equal.
2. Decay and Termite Resistant Wood: “Preserve”, or equal.
3. Decay, Termite, and Water Resistant Wood: “Preserve Plus”, or equal.

D. Requisite Properties:
1. Minimum Retention: At least 0.25 pounds per cubic foot in conformance with AWPA C2 for lumber and timber and AWPA C9 for plywood.
2. Maximum Moisture Content: Kiln dry after treatment to a moisture content of not more than 19 percent for lumber, and not more than 15 percent for plywood.

2.05 FIRE-RETARDANT TREATED WOOD (FRTW)

A. Description: Wood products conforming to AWPA C20 and AWPA C27, manufactured with fire-retardant materials for which the fire-retardant manufacturer publishes physical properties of treated wood after exposure to elevated temperatures, when tested in conformance with ASTM D 5664 and ASTM D 5516.
   1. Provide exterior type wood at exterior locations.
   2. Provide Type A High Temperature (HT) wood at interior locations.

B. Application: Provide FRTW at the following locations and elsewhere where indicated.
   1. Framing for raised platforms.
   2. Concealed blocking.
   3. Roof construction.
   4. Plywood backing panels.
   5. Other wood items installed within fire-resistive construction.
   6. Elsewhere where indicated.

C. Restrictions: Fire-retardant products must not develop or advance metal fastener corrosion.

D. Products: Provide the following products manufactured by Hoover Treated Wood Products, Inc., or equal
   1. Interior Locations: “Pyro-Guard”, or equal.
   2. Exterior Locations: “Exterior Fire-X”, or equal.

2.06 ROUGH HARDWARE

A. Uncoated (Bare) Carbon Steel Fasteners:
   1. Screws: Manufactured from carbon steel wire rods and uncoated coarse round wire conforming to ASTM A 510, Grades 1018 to 1022.
   2. Bolts: ASTM A 307, Grade A.
   3. Nuts and Flat Washers: ASTM A 563, Grade C3.

B. HDG Zinc-Coated Steel Fasteners:
   1. Description: Carbon steel fasteners with hot dip galvanized coating conforming to

      a. ASTM A 153 minimum zinc coating weight requirements for Class C materials (fasteners over 3/8-inch diameter and similar articles; washers 3/16-inch and 1/4-inch thick) or Class D materials (fasteners 3/8-inch diameter and under, rivets, nails and similar articles; washers under 3/16-inch thick); and

      b. ASTM F 2329 for coating of threaded fasteners and washers by hot-dip zinc galvanizing.
   2. Performance Requirements: No sign of surface red rust after at least 32 hours of ASTM B117 salt spray test performed on screws after being driven through and removed from sheet metal panels.

C. Stainless Steel Fasteners:
   1. Description: Austenitic stainless-steel screws, bolts, and studs conforming to ASTM F 593 and nuts conforming to ASTM F 594 requirements for Alloy Group 1 (304 Series) or Alloy Group 2 (316 Series).
   2. Performance Requirements:

a. Type 304: No sign of surface red rust after at least 1,000 hours of ASTM B117 salt spray test performed on screws after being driven through and removed from sheet metal panels.

b. Type 316: No sign of surface red rust after at least 1,500 hours of ASTM B117 salt spray test performed on screws after being driven through and removed from sheet metal panels.

D. Ceramic-Coated Anti-Corrosive Steel Fastener Material:

1. Description: Carbon steel fasteners having 3-coat finish that provides electrolytic corrosion protection by combining the sacrificial protection of zinc with the barrier protection of a ceramic topcoat and having a current evaluation report from the ICC-ES demonstrating code compliance.
2. Application: Use ceramic-coated anti-corrosive steel fasteners

   a. with pressure treated wood, including alkaline copper quaternary (ACQ), ammoniacal copper arsenate (ACA), chromated copper arsenate (CCA), ammoniacal copper zinc arsenate (ACZA), copper azole (CBA-A and CA-B), copper citrate (CC), and disodium octaborate tetrahydrate (DOT);

   b. when attaching to exotic hardwood lumber base material;

   c. with composite lumber; and

   d. when attaching cement board, high-density exterior sheathing, and tile backer board to framing members at exterior walls, at high-moisture interior walls, and in high-corrosion environments.
3. Product: “Grabber” screws manufactured by Grabber Construction Products, or equal.
4. Requisite Properties:

   a. Basecoat An 8- to 10-micron (0.0003- to 0.0004-inch) mechanically deposited zinc-alloy coating.

   b. Intermediate Coat: Chromate conversion coating.

   c. Topcoat: Corrosion-resistant baked ceramic surface coating.
5. Performance Requirements: No sign of surface red rust after at least 1,000 hours of ASTM B 117 salt spray test performed on screws after being driven through and removed from sheet metal panels.

E. Nails, Brads, and Staples: Provide fasters conforming to ASTM F 1667.

1. Fastening Lumber to Lumber: Cement-coated or annular (ringed-shank) threaded nails of sufficient length to penetrate at least1-1/4-inches into adjoining items; or stove or lag bolts used with washers.
2. Fastening Plywood to Lumber: Annular (ringed-shank) threaded nails; at least size 8d for 1/2-inch panels and at least size 10d for 3/4-inch panels.

F. Power-Driven Staples, Nails, P-nails, and Allied Fasteners: Must conform to ICC-ES Evaluation Report No. 1539.

G. Wood Screws: Must conform to ASME B18.6.1.

H. Steel Drill Screws for Fastening Wood to Cold-Formed Metal Framing: Must conform to ASTM C 954, except with wafer heads and reamer wings, length as recommended by the screw manufacturer for material being fastened.

I. Bolts:

1. Steel Bolts: ASTM A 307 Grade A with hex nuts conforming to ASTM A 563, and flat washers where indicated.
2. Anchor Bolts: ASTM F 1554 Grade 36. Provide hot-dip zinc-coated anchor bolts where item being fastened is galvanized.
3. Lag Bolts: Must conform to ASME B18.2.1.

2.07 ACCESSORIES

A. Wood Glue:

1. Description: Yellow aliphatic resin polyvinyl acetate (PVA) glue.
2. Manufacturers: Provide products manufactured by one of the following, or equal.
    a. Elmer's Products Inc.
    b. Franklin International.
    c. Gorilla Glue, Inc.
3. Products: Provide the following products manufactured by Franklin International, or equal.
    a. Interior Grade Glue: "Titebond Original" , or equal.
    b. Exterior Grade Glue: "Titebond III Ultimate", or equal.
    c. Moulding and Trim Glue: "Titebond Quick & Thick Mutisurface Glue", or equal.

B. Construction Adhesive:

1. Description: General purpose, indoor or outdoor, drillable, moisture resistant, sandable, heavy duty construction adhesive.
2. Product: "Titebond PROvantage" manufactured by Franklin International, or equal.

C. Other Accessories: Provide accessories and secondary items normally furnished or necessary for a complete installation; or supplied, required, recommended, or accepted by the manufacturer for actual in-service conditions applicable to the project.

PART 3 - EXECUTION

3.01 INSTALLATION REQUIREMENTS

A. General:

1. Ensure proper supervision practices are followed at the project site before the installer begins work and at all times during installation.
2. Verify in-place supporting and adjacent construction satisfies all conditions that might affect the quality of installation or the durability or performance of installed and adjacent items.
3. Fit rough carpentry to other construction. Scribe and cope as needed for accurate fit. Form to shapes indicated and cut as required for true line and level of attached work. Coordinate locations with other work involved.
4. Set rough carpentry true to line; plumb, level, and square without warp or rack; with flush, well-fitted joints; and in alignment with adjacent construction.
5. Securely attach rough carpentry in place to supporting construction.

B. Special Techniques:

1. Sort and select lumber so that natural characteristics do not interfere with installation or with fastening other materials to lumber. Do not use materials with defects that interfere with function of member or pieces that are too small to use with minimum number of joints or optimum joint arrangement.
2. Provide blocking and framing as indicated and as required to support facing materials, fixtures, specialty items, and trim.
3. Provide metal clips for fastening gypsum board or lath at corners and intersections where framing or blocking does not provide a surface for fastening edges of panels. Do not space clips more than 16 inches on center.
4. Install wood furring, sleeper, blocking, grounds, nailers, and other items where indicated and where required for attaching other work.
5. Make tight connections between members.
6. Select fasteners of size that will not fully penetrate members where opposite side is exposed to view or will receive finish materials.
7. Recess bolts and nuts flush with surfaces, unless otherwise indicated. Do not countersink nail heads, unless otherwise indicated.
8. Install fasteners without splitting wood.

C. Installation Tolerances: Install framing within the following tolerance variations.

1. Maximum Out of Plumb: Not more than 1/4-inch in 10 feet.
2. Maximum Out of Plane: Fastening surfaces of adjacent framing members may not vary by more than 1/8-inch.
3. Maximum Positional Tolerance: Not more than 1/4-inch. Cumulative error may not exceed minimum fastening requirements of sheathing or other finishing materials.

D. Correction and Repair:

1. Correct deficiencies that do not conform to the Contract Documents.
2. Repair non-conforming, damaged and defective work.

END OF SECTION

©AWCWEST 18E22 All rights reserved.

RSTLNE, TAGDSC, ELMTB, CLSB2010, CLSB3010, ELMTC, CLSC1010

Section 06 18 13
Glued-laminated Beams

PART 1 - GENERAL

1.01 SUMMARY

A. Glue laminated structural beams complete with required attachment brackets and hardware.

1.02 RELATED WORK: GENERAL PROVISIONS OF THE CONTRACT DOCUMENTS

A. Anchorage angles cast in masonry as required for glue laminated structural units.

1.03 CODES AND STANDARDS

A. Codes and Standards: All members shall be fabricated and inspected in accordance with Title 24, Part 2, C.C.R. 2013 CBC Chapter 23.

1. Structural Glue Laminated Timber Design Title 24, Section 2303.1.3.

2. Preservative Treatment of Lumber Title 24, Section 2304.11 and American Wood Preservers Association Standards.

B. Inspection: Continuous inspection of an inspector specially approved for this purpose by the governing jurisdiction will be required during fabrication of al structural glued laminated lumber. Inspection shall be in compliance with Title 24, Section 1705A.5. A WCLIB or APA certificate will not meet this requirement.

C. Certification: Each structural glued laminated member will be stamped with an identifying number accompanied by a certificate of inspection showing the grade and species of lumber, type of glue and other information as required. Certificates will bear a signed statement by the inspector, that the work has been executed in strict accordance with the approved drawings and specifications. A WCLIB or APA certificate will not meet this requirement.

D. Fabrication: Per Title 24, Part 2, 2303.1.

E. Comply with Section 01 45 29 Testing Laboratory Services

1.04 SUBMITTALS

A. Submit in accordance with other the General Provisions of the General Conditions and Section 01 33 00 Submittal Procedures.

B. Shop Drawings:

1. Indicate pertinent dimensions, grades shop applied finishes, cuts, and drilled holes, fasteners, erection details, and connection materials and finished. Provide one reproducible and two prints of the shop drawings.

C. Certificates: Certify compliance with ANSI/AITC A190.1.

1.05 DELIVERY, STORAGE AND HANDLING

A. Arrange delivery of glue laminated members in accordance with construction schedule to avoid double handling.

B. Deliver members to site with opaque wrappings, for protection. Maintain in place until immediately prior to installation of roof deck.

C. If double handling is necessary, store members well off ground and separate to allow complete air circulation. Cover members with an opaque moisture resistant membrane.

D. Use padded, non-marring slings when handling members.

PART 2 - PRODUCTS

2.01 ACCEPTABLE MANUFACTURERS

A. Manufacturer: Western Wood Structures, Inc., Standard Structures

B. Other acceptable manufacturers:

1. Timber Components, Inc.

2. Timfab, Inc.

2.02 MATERIALS AND COMPONENTS

A. Glue laminated members: Douglas fir laminating stock and adhesive of type to suit service grade 24F-V8. 24F-V4 may be used at simple span conditions - Alaska yellow cedar laminating stock and adhesive of type to suit service grade 20F-V12 per Title 24, 2303.1.3 shall be used for all exposed conditions.

1. It is assumed that each lamination is graded on the basis of the requirements of the nominal size of the individual lamination. When lumber is resawn - regrade on the basis of the new size at no expense to the Owner.

2. Joints: All end joints pre-glued, plain scarf joints. All portions of scarfs in adjacent laminations within 1/6 of the depth of the top or bottom of the beam separated by a minimum of 6 inches. Strength reducing defects such as wane are not permitted in or near an end joint. The sum of all knots, which appear in the beveled surface of a scarf, not to exceed one-fourth the nominal width of lamination when the laminations are one and five-eighths inches in thickness. The requirements of pre-glued scarf joints may be waived by the architect or structural engineer with the approval of the governing jurisdiction when a peg or positive mechanical device other than a nail or nails is used to maintain proper contact and alignment of the mating surfaces. The requirement for plain scarf joints may be waived by the architect or structural engineer if the joint to be used is specifically approved by the governing jurisdiction. In evaluating other types of joints for this purpose the procedures recommended by the "Standard Specifications" will be used as a guide but the qualification criteria is not necessarily the same and all test values must exceed 5200 psi.

3. Standard "Peg-Scarf" and "Finger Joints," of type approved by the governing jurisdiction may be used.

4. Pre-glue edge joints together edgewise when used in the top and bottom laminations for exterior use and for any lamination when the direction of load is parallel to the wide face of the lamination. Other laminations may consist of two or more pieces placed side by side provided all longitudinal edge joints in adjacent laminations are staggered at least two inches laterally.

5. Moisture Content: Not less than 7% or more than 12% at time of gluing. Range of moisture content of various laminations assembled into a single member not to exceed 5%. Comply with Section 2316A.2 (9), Title 24.

6. Adhesives: Mixing, spreading, storage life, pot life, working life and assembly life in accordance with 2316A.6 (28), and the manufacturer's recommendations. Use exterior type of adhesive for all members, ASTM D3024.

B. Hardware and Connections: Type general construction steel. Hot-dip galvanize where exposed to weather.

C. Bolts, Nuts and Washers: High strength type recommended for structural steel joints: ASTM A307; of medium carbon steel; galvanized.

2.03 FABRICATION

A. Glued-laminated timbers shall be manufactured and identified as required in ANSI/AITC A190.1 and ASTM D3737. Additional requirements per Title 24, Section 2303.1.3.1. Make adequate provision for possible erection stresses.

1. Grade 24F-V4 at simple span beams is acceptable.

2. Exposed beams shall be Alaskan Yellow Cedar, grade 20F-V12.

B. Laminated machine finished, but not sanded, to a smooth surface and to a uniform thickness with a maximum allowable variation of 1/64". Warp, twist, or other characteristics which will prevent intimate contact of adjacent glued faces of interfering with uniform bending to a required curvature when clamping pressure is not permitted. Surfaces to be glued must be clean and free from oil, dust and other foreign material detrimental to satisfactory gluing.

C. Employ clamping methods which provide uniform pressure over entire surface area. Nailing in lieu of clamping for pressure is not permitted. Clamping may start at any point but must progress to an end or ends. Apply sufficient gluing pressure to assure close contact of the surfaces and provide a uniformly thin glue line; minimum pressure 100 pounds per square inch. Maintain pressure until adhesive has set. Clamping time and gluing process in strict accordance with adhesive manufacturer's recommendations.

D. Handling or erection tools, equipment and methods designed to prevent scarring the corners and faces or otherwise injuring the member. Sharp instruments or unprotected wire rope or chain slings are not permitted.

E. Fabricate steel hardware and connections with joints neatly fitted, welded and ground smooth.

F. Clean, prepare, and shop prime steel hardware and connections. Provide minimum G60 galvanized coating.

G. Beams, fascias, trim, trellage and other architectural appearing members shall be architectural appearance grade for all exposed members.

PART 3 - ERECTION

3.01 ERECTION

A. Set structural laminated members level and plumb and in correct positions.

B. Provide temporary bracing and anchorage required to hold members in place until permanently secured.

C. Fit members together properly and accurately without trimming, cutting, or any other unauthorized modification. Report discrepancies to architect immediately upon discovery.

END OF SECTION

SECTION 06 41 23
SOLID PHENOLIC CORE CASEWORK

PART 1 - GENERAL

1.01 SUMMARY

A. Section Includes:
1. Shop-fabricated SPC panel cabinets and casegoods.
2. Shop-fabricated SPC panel countertops.
3. Supplementary components and accessories normally furnished or necessary for a complete installation, whether or not such items are indicated on the Drawings or included in the Specifications.

B. Related Requirements:
1. Section 06 41 00 for shop-fabricated wood casework.

1.02 REFERENCES

A. Abbreviations and Acronyms:
1. SPC: Solid Phenolic Core.
2. WI: Woodwork Institute.

B. Definitions:
1. Manufacturer: Means plastic laminate, finish hardware, or accessory manufacturer, as the context admits, unless otherwise indicated.
2. Fabricator: Means the casework fabricator, unless otherwise indicated.

1.03 ADMINISTRATIVE REQUIREMENTS

A. Coordination:
1. Coordinate casework finish hardware with adjacent hardware finishes.
2. Coordinate casework design with countertops. Provide reinforcement as required to support countertops and backing. Countertops must not deflect to the point of cracking when subjected to in-service loads.

B. Shelving Performance Requirements:
1. Design Load: Shelving must support at least 50 pounds per square foot uniformly distributed load; not more than 200 pounds total load per shelf.
2. Deflection: Limit deflection under maximum design load to L/200, except that all shelving in the same room, or space must have the same thickness where not concealed by doors. Minimum shelving thickness must be at least 3/4-inch.
3. Permanent Deformation: No permanent deformation at maximum design load after 48 hours continuous loading.

C. Sequencing:
1. Schedule casework deliveries to the project site only after the building is enclosed with a permanent enclosure; “wet work” within storage areas (including concrete, cast underlayment, mortaring, grouting, plastering, and gypsum board finishing) is complete and cured or dried to a

condition of equilibrium; storage areas are broom- and vacuum-clean; and the HVAC system is activated, operating, and maintaining ambient conditions at occupancy levels.

2. Install casework only after all other finishing operations are complete, especially overhead finishes.
3. After casework installation, maintain ambient conditions within design range until Final Completion.

D. Scheduling:

1. Acclimation: Allow sufficient time in the construction schedule to acclimate casework to specified ambient conditions for between 72 hours and 6 weeks before installation begins, or until moisture content is not more than 8 percent, when measured with a moisture meter at specified ambient conditions.

1.04 SUBMITTALS

A. Action Submittals: Submit the following for responsive action (formal review and approval).

1. Product Data: For manufactured items, submit manufacturer's product data, specifications, and all other information necessary to show conformance to the Contract Documents, excluding material safety data sheets (MSDSs), which are returned to the Contractor without review or responsive action.
2. Shop Drawings:

    a. Submit dimensioned plans and elevations drawn to scale and showing casework layout and types. Show locations, sizes, and extents of all casework, accessories, and trim. Label manufactured items by product name.

    b. Include project-specific dimensioned details drawn to scale showing profiles, shapes, joints, seams, and dimensions, including coves, miters, and corner conditions specific to the project. Cross-reference details to plans and elevations.

    c. Indicate method of attaching, fastening, joining, adhering, and anchoring to adjacent construction.
3. Samples: Submit at least one 8-inch square representative fabrication sample for each casework type, color, finish, and variety, including core panels, facings, and edgings.

B. Informational Submittals: Submit written descriptions confirming experience specified in QUALITY ASSURANCE article below for information (informal review: responsive action not expected or required, except to record non-conformance with submittal requirements).

1.05 QUALITY ASSURANCE

A. Regulatory Requirements: Casework must conform to the requirements of CBC section 1407 and have a maximum FSI Value of 25 or less and a maximum SDI Value of less than 10 (Class A), when tested in conformance with ASTM E 84.

B. Quality Standard: Provide casework conforming to Architectural Woodwork Institute/ Architectural Woodwork Manufacturer's Association of Canada/ Woodwork Institute publication "*Architectural Woodwork Standards*" requirements for each specified Grade.

C. Qualifications:

1. Fabricators: Company or individuals must have at least 10 years' experience fabricating casework installed on at least 100 previous projects similar to this project in size, material, design, and complexity.

2. Installer: Company or individuals must have at least 5 years' experience installing casework for at least 30 previous projects similar to this project in size, material, design, and complexity.
3. Supervisors: Individuals must have at least 7 years' experience installing casework for at least 30 previous projects similar to this project in size, material, design, and complexity, including at least 2 years' supervisory experience directing and leading casework installers.

1.06 HANDLING

A. Receiving: Inspect all deliveries for deteriorated, damaged, and defective items.
   1. Reject items that are not packaged in a manner that prevents damage; or that exhibit deterioration or damage or have damaged or open packaging or containers.
   2. Unload and store only inspected and accepted items.

B. Storage: Store unloaded items indoors as shipped, upright in their original packaging or containers, within dry, well-ventilated, broom-cleaned and enclosed storage areas.
   1. Furnish adequate dunnage and bracing during storage.
   2. Prevent stored items from contacting the floor, from soiling and staining, and from deterioration and damage.
   3. Do not leave items uncovered where they might become wet; or exposed to heat or sudden changes in temperature or relative humidity; or other sources of deterioration and damage, including dust and other airborne contaminants.

C. Handling: Handle items in a manner that that prevents damage.

D. Damaged Item Replacement: Promptly remove and replace deteriorated, damaged, or defective casework with undamaged casework that does not exhibit deterioration, damage, or defects.

E. Packaging Waste Management: Do not burn or bury construction waste at the project site. Remove and legally dispose of all construction waste away from the project site.

PART 2 - PRODUCTS

2.01 ARCHITECTURAL CASEWORK

A. Cabinets and Casegoods: SPC panel casework conforming to the referenced quality standard, Section 10 requirements for Custom Grade, Construction Type B (face frame) single-length cabinet sections with Interface Style 1 flush overlay cabinet doors and drawers.

2.02 SOLID PHENOLIC CORE PANEL CONSTRUCTION

A. Description: SPC panel material consisting of Phenolic impregnated Kraft paper core and an integrated face sheet of clear melamine over melamine-impregnated decorative paper surfaces.

B. Products: Provide the following manufactured by Trespa International B.V., or equal., or equal.
   1. Countertops, Drawer Faces, and Doors: "Athlon FR" panels, or equal.
   2. Backs, Shelves, and End Panels: "Athlon FR" panels, or equal.

C. Requisite Properties:
   1. Minimum Weight: At least 93 pounds per cubic foot.
   2. Minimum Thickness:

a. Cabinet Sides and Bottoms: At least 1/2-inch.

b. Door and Drawer Heads: At least 1/2-inch.

c. Drawer Bottoms: At least 1/4-inch.

d. Horizontal Rail Supports: At least 1/2-inch.

e. Cabinet Backs: At least 1/4-inch.

f. Wall Cabinet Backs: At least 1/4-inch.

g. Cabinet Shelves: At least 3/4-inch.

h. Work Surfaces: Indicated on the Drawings or selected by the Architect, or equal.

3. Grade: Fire resistant grade.
4. Edges: Provide eased exposed edges.
5. Color: Selected by the Architect.
6. Pattern:
7. Finish: Double Sided Crystal (smooth). Double Sided Quartz (

D. Performance Requirements:
1. Minimum Modulus of Elasticity: At least 1.5 million pounds per square inch.
2. Minimum Shear Strength: At least 2,000 pounds per square inch.
3. Minimum Compressive Strength: At least 24.000 pounds per square inch.
4. Maximum Water Absorption: Not more than 3 percent.

2.03 FINISH HARDWARE

A. General:
1. Provide all hardware indicated, specified, and necessary for a complete installation.
2. Hardware finish must match the door hardware specified in Section 08 71 00, unless otherwise noted.

B. Manufacturers: Provide products manufactured by one of the following, or equal.
1. Accuride.
2. Blum, Inc.
3. Doug Mockett & Co., Inc.
4. Häfele America Co.
5. Sugastune Corp.

C. Pulls:
1. Description: Back-mounted pulls conforming to BHMA A156.9 Hardware Type No. A09021.
2. Products: Provide “DP128 Series” pulls manufactured by Doug Mockett & Co., Inc., or equal.
3. Requisite Properties:

a. Finish: Indicated on the Drawings or selected by the Architect

D. Hinges:
1. Description: Frameless, self-closing concealed hinges (European cup style) conforming to BHMA A156.9, B01601 with integrated soft-close mechanism in the hinge cup.

2. Product: “Salice Silentia Series” manufactured by Häfele America Co., or equal.
3. Requisite Properties:

    a. Provide hinges with between 95 and 100 degrees of opening for cabinets having retractable doors; and for cabinets next to walls or similar obstructions.

    b. Provide hinges with between 100 and 120 degrees of opening for cabinets requiring additional cabinet access.

    c. Provide hinges with between 165 and 175 degrees of opening for cabinets requiring the most cabinet access; and for installations where there are drawer pullouts in the cabinets.

    d. Provide at least 3 hinges for doors at least 24 inches wide or at least 36 inches high.

    e. Provide either screw- or rapido-mounted hinges.

E. Full Extension Drawer Slides:
1. Description: Heavy Duty full extension slides conforming to BHMA A156.9 Hardware Type No. B05091, with decelerated closing
2. Products: Provide the following supplied by Häfele America Co., or equal.

    a. Light Duty Side Mount Slides: “Accuride 2632” slides, or equal.

    b. Medium Duty Side Mount Slides: “Accuride 3832EC” slides, or equal.

    c. Heavy Duty Side Mount Slides: “Accuride 3657” slides, or equal.

    d. Medium Duty Bottom Mount Slides: “Accuride 3132EC Eclipse Easy-Close” slides, or equal.

    e. Heavy Duty S Bottom Mount Slides: “Accuride 9307” slides, or equal.
3. Grades:

    a. Light Duty Slides: Provide BHMA-certified Grade 1, rated to at least 50 pounds per pair, for pencil drawers; and rated to at least 75 pounds per pair for general purpose drawers.

    b. Medium Duty Slides: Provide BHMA-certified Grade 1HD-100, rated to at least 100-pounds per pair for file drawers up to 24 inches wide.

    c. Heavy Duty Slides: BHMA-certified Grade 1HD-200, rated to at least 200 pounds per pair for lateral file drawers greater than 24 inches wide.
4. Mounting Style:

    a. Provide side-mount slides for cabinet trays and drawers.

    b. Provide bottom-mount slides for cabinet pullouts and heavy duty storage platforms.
5. Finish: Indicated on the Drawings or selected by the Architect.
6. Accessories: Provide stops to prevent accidental removal.

F. Shelf Brackets:
1. Description: Spoon-shaped 1/4-inch nickel-plated steel shelf supports.
2. Product: “Item No. 282.04.739” manufactured by Häfele America Co., or equal.

G. Locks:

1. Description: Cylinder locks that separate the lock core from the cylinder housing, allowing any combination of locking systems.
2. Product: “Cylinder Module System” manufactured by Häfele America Co., or equal.
3. Requisite Properties:

    a. All cabinet doors and drawers must be lockable.

    b. Certain areas may be keyed separate. Everywhere else must be keyed the same.

    c. Provide master keying.

H. Grommets:
1. Standard Grommet Liner and Cap: “MM5A” solid brass grommet liner (fits a 2-7/8-inch hole) and “MM5” solid brass grommet cap (fits a 2-3/4-inch hole).
2. No Gap Small Grommets: “BRV1 Brava Grommet – Small”, or equal (fits a 2-3/8-inch hole size).
3. No Gap Large Grommets: “BRV2 Brava Grommet – Large”, or equal (fits a 3-5/32-inch hole size).
4. Trash Grommet: “TM-1 Steel” stainless steel trash grommet, or equal (fits a 6-inch hole size).
5. Finish: Satin Chrome.

2.04 ACCESSORIES

A. Fastenings: Provide backings, inserts, loose connection hardware, fasteners, anchors, attachments, connectors, and other items supplied, required, recommended, or accepted by the fabricator for actual in-service conditions applicable to the project.

B. Other Accessories: Provide accessories and secondary items normally furnished or necessary for a complete installation; or supplied, required, recommended, or accepted by the manufacturer for actual in-service conditions applicable to the project.

2.05 FABRICATION

A. Fabricate items to the dimensions, profiles, and details shown, and in conformance with the specified quality standards requirements, unless otherwise noted or indicated.
1. Shop-assemble work in as large units as practicable to minimize field cutting and jointing.
2. Where necessary to fit at the project site, allow ample allowance for cutting and fitting. Create sufficient scribe where items intersect walls and partitions.
3. Conceal means of fastening various items together.
4. Assemblies must be free from open joints, hammer and machine marks, structural defects, and surface blemishes.

B. Finish Hardware:
1. Accurately fit hardware and install in conformance with the manufacturer's instructions.
2. Accurately fit doors and drawers with uniform clearance at all edges.
3. Doors and drawers must operate freely, but not loosely, without sticking or binding, with all hardware adjusted and functioning properly.

PART 3 - EXECUTION

3.01 EXAMINATION

A. Oversight: Ensure an adequate number of supervisors are present and proper supervision practices are followed at the project site before the installer begins work and at all times during installation.

B. Verification: Verify that in-place construction satisfies all other conditions that might affect the quality of installation or the durability, appearance, or performance of installed and adjacent items.

C. Evaluation and Assessment:
   1. Identify deficient and non-conforming project conditions.
   2. Perform or arrange and pay costs without reimbursement from Owner for all remedial work necessary to correct or improve deficient conditions, without limitation, before the installer begins work.

3.02 INSTALLATION

A. General Requirements:
   1. Scribe and cope items as necessary for an accurate fit. Perform required cutting, drilling, and fitting for casework installation.
   2. Set casework true to line, to required levels and lines, plumb, square, and cut and fitted without warp or rack; sloped or level as required; with flush well-fitted joints; and in alignment with adjacent construction.
   3. Shim as required with concealed shims.
   4. Fit exposed connections accurately to form flush hairline joints

B. Special Techniques:
   1. Install casework in a manner consistent with the specified grade; and plumb, level, true, and straight with no distortions.
   2. Shim using concealed shims.
   3. Secure to ground, stripping, and blocking with countersunk, concealed fasteners and blind nailing as required for a satisfactory installation.
   4. At gypsum board construction, anchor through wall surface to wood blocking or wood studs only.
   5. Furnish fillers, closures and trim as required for a complete installation. Scribe in place where required.

C. Interface with Adjacent Items:
   1. Provide materials, components, and accessories normally furnished or necessary to securely attach casework to supporting construction.
   2. Casework taller than 42 inches must be seismically anchored.

D. Installation Tolerances: Install casework to an allowable tolerance variation of not more than 1/4-inch from true position and not more than 1/8-inch and from plumb, level, and alignment.

3.03 CORRECTION AND REPAIR

A. Non-conforming, damaged, and defective work must be brought into conformance with the Contract Documents. Correct and repair as necessary, without limitation, including arranging all

correction and repair work and paying all correction and repair costs, until accepted in writing by the Architect.

B. Corrective and repair work must be performed in conformance with a correction and repair plan submitted to and accepted in writing by the Architect before correction or repair work begins. At a minimum, correction and repair plans must include
   1. written descriptions of non-conforming, damaged, and defective work;
   2. supporting sketches, diagrams, photographs, and other visual depictions of non-conforming, damaged, and defective work; and
   3. similar written descriptions and visual depictions of Contractor-proposed corrections and repairs.

C. Arrange and pay costs without reimbursement from Owner for removing and replacing work that cannot be corrected or repaired to the Architect's acceptance.

3.04 ADJUSTING

A. Verify smooth and quiet door, drawer, and finish hardware operation.

B. Lubricate and adjust operating parts and finish hardware to function properly, free from warp, twist, binding, and distortion. Confirm latches and locks engage securely without forcing or binding.

C. Rehang or replace doors, drawers, and finish hardware that do not operate freely in a safe and reliable manner.

3.05 CLEANING

A. Cleaning Work: Remove from exposed casework surfaces anything that might interfere with uniform oxidation or weathering. Clean all visible casework surfaces in a manner that does not result in any warranty or guarantee becoming void.
   1. Use cleaning materials, equipment, and accessories supplied, and means, methods, techniques, and procedures required, recommended, or accepted by the manufacturer.
   2. Do not use cleaning materials or procedures known to change, or that might change, the appearance of exposed finishes or adjacent surfaces; or cause deterioration or damage to exposed finishes or adjacent surfaces.
   3. Protect adjacent surfaces not being cleaned from staining, deterioration, damage, or other detrimental effects caused by cleaning.
   4. Arrange and pay costs without reimbursement from Owner for removing and replacing work that cannot be cleaned to the Architect's acceptance.

B. Waste Management: After completing the work of this specification section, leave work areas free from debris, waste, scrap, equipment, tools, and other items.

3.06 PROTECTION

A. Protect installed casework in place from soiling, deterioration, and damage until Substantial Completion.

B. Do not store anything in, on, adjacent to, or against installed casework unless it is protected from damage. Do not use installed casework as work surfaces.

C. Remove protection when it's no longer needed and before Substantial Completion.

END OF SECTION

©AWCWEST 18E22 All rights reserved.
RSTLNE, TAGTIS, TAGFFE, ELMTE, CLSE20

DIVISION 07

THERMAL AND MOISTURE PROTECTION

SECTION 07 11 13
BITUMINOUS DAMPPPROOFING

PART 1 - GENERAL

1.01 SUMMARY

A. Section Includes:
   1. Bituminous dampproofing.
   2. Protection board and drainage panels.
   3. Surface preparation.
   4. Supplementary components and accessories normally furnished or necessary for a complete installation, whether or not such items are indicated on the Drawings or included in the Specifications.

1.02 SECTION REQUIREMENTS

A. Qualifications:
   1. Installer: Company or individuals must have at least 5 years' experience installing dampproofing for at least 30 previous projects similar to this project in size, material, design, and complexity.
   2. Supervisors: Individuals must have at least 7 years' experience installing dampproofing for at least 30 previous projects similar to this project in size, material, design, and complexity, including at least 2 years' supervisory experience directing and leading dampproofing installers.

B. Submittals: Submit product data and written descriptions of specified qualifications.

C. Field Samples: Include *in-situ* mockups as part of the work of this specification section.
   1. Install at least one 100-square-foot field sample of each waterproofing membrane installation to verify selections made under sample submittal and to set quality standards for installation. Demonstrate surface preparation, crack repair, and joint and corner preparation.
   2. Test dampproofing membrane adhesion to verify surface preparation.
   3. The Architect reviews field samples for conformance to the Contract Documents and approves or rejects them as the standard by which subsequent work is evaluated.
   4. Revise field samples and repeat reviews, including arranging all revisions and paying all revision costs, until accepted in writing by the Architect. Final acceptance of dampproofing is made from field samples.
   5. After acceptance, promptly identify and protect field samples for reference until Substantial Completion.
   6. Approved field samples may remain part of the work after being identified for future reference.

PART 2 - PRODUCTS

2.01 BITUMINOUS DAMPROOFING

A. Description: Solvent-free, cold-applied, emulsified-asphalt dampproofing conforming to one of the following.
   1. Trowel Coats: ASTM D 1227, Type II, Class 1.

2. Brush and Spray Coats: ASTM D 1227, Type III, Class 1.
3. Fibered Brush and Spray Coats: ASTM D 1227, Type II, Class 1.

B. Applications:
1. Below Grade: Used for dampproofing foundations and subgrade walls not subject to hydrostatic pressure; and for lining concrete and masonry planters.
2. Above Grade: Used for dampproofing the exterior face of interior face of masonry, concrete, CMU, and gypsum sheathing walls in cavity wall construction.

C. Products: Provide one of the following manufactured by Henry Co., or equal.
1. Trowel Coats: “HE785”, or equal, asphalt emulsion dampproofing.
2. Brush and Spray Coats: “HE788”, or equal, non-fibered asphalt emulsion dampproofing.
3. Fibered Brush and Spray Coats: “HE789”, or equal, fibered asphalt emulsion dampproofing.

D. Requisite Properties:
1. Minimum Thickness: Between 1/16- and 1/8-inch per coat. Apply one coat typically. Apply 2 coats if installing by spray and in severe conditions
2. Maximum UV Exposure Limit: Not more than 14 calendar days.
3. Maximum High Temperature Application: Up to 120 deg. F.
4. Color: Black.

2.02 PROTECTION BOARD AND DRAINAGE PANELS

A. Protection Board:
1. Description: Pre-fabricated asphaltic board consisting of mineral filled, high-melt-point asphalt core sandwiched between non-woven glass fiber mats.
2. Products: Provide one of the following, or equal.
    a. “Perma-Board GG3 FF” manufactured by HAL Industries, Inc.
    b. “Protection Course” manufactured by WR Meadows.
3. Requisite Properties:
    a. Thickness: At least 3mm.
    b. UV Exposure Limit: Not more than 21 calendar days.
4. Adhesive:
    a. Description: fast drying solvent-based rubber cement
    b. Application Used for adhering protection boards to waterproofing membranes.
5. Product: As supplied, required, recommended, or accepted by the manufacturer.

B. Drainage Panels:
1. Description: Preformed 0.375-inch thick geocomposite drainage sheet system consisting of a hollow studded polystyrene core covered on one side with a non-woven, needle punched polypropylene filter fabric; and on the other side with a smooth polymeric sheet (vertical applications) or a high backing film (horizontal applications).
2. Product: “DB 6000” (vertical applications) or “DB 6200” (horizontal applications) manufactured by Henry Co., or equal.
3. Maximum UV Exposure Limit: Not more than 10 calendar days.

2.03 ACCESSORIES

A. Porous Surface Primers:
   1. Trowel Coats: “Henry Emulsion Primer” or “HE788”, or equal, non-fibered asphalt emulsion dampproofing cut 20 percent by volume with mix water.
   2. Brush and Spray Coats: “HE788”, or equal, non-fibered asphalt emulsion dampproofing cut 20 percent by volume with mix water.
   3. Fibered Brush and Spray Coats: “HE789”, or equal, fibered asphalt emulsion dampproofing cut 20 percent by volume with mix water.

B. Mix Water: Provide fresh, clean, clear, potable water from a domestic source. Water must conform to ASTM C 1602 and be free of oil, grease, waxy films, curing compounds, release agents, and other deleterious materials, including salts, acids, alkalis, organic materials, detergents, and other matter that might negatively affect tile quality, durability, or performance.

C. Fiberglass Reinforcing:
   1. Description: inert, acid- and heat-resistant, 20x10 mesh woven glass fiber fabric having a tensile strength of at least 75 pounds per inch.
   2. Product: “HE183” manufactured by Henry Co., or equal.

D. Liquid Flashing: “HE225F’, or equal, neoprene flashing sealant.

A. Other Accessories: Provide accessories and secondary items normally furnished or necessary for a complete installation; or supplied, required, recommended, or accepted by the manufacturer for actual in-service conditions applicable to the project.

PART 3 - EXECUTION

3.01 INSTALLATION REQUIREMENTS

A. General:
   1. Ensure proper supervision practices are followed at the project site before the installer begins work and at all times during installation.
   2. Verify in-place construction, project conditions, and the work of other specification sections conform to the manufacturer’s instructions and other requirements and recommendations.
   3. Verify substrates are dry and free of curing compounds, sealers, hardeners, and deleterious and other substances that might interfere with dampproofing adhesion,
   4. Prepare substrates as required, recommended, or accepted by the manufacturer without limitation; and in a manner that does not result in any warranty or guarantee becoming void.
   5. Install dampproofing using materials and methods required, recommended, or accepted by the manufacturer, along with manufacturer-recommended accessories and techniques.
   6. Completed work must match approved samples and mockups, as accepted by the Architect.
   7. Installed dampproofing must be warrantable. Do not install, correct, or replace dampproofing in a manner that results in any warranty or guarantee becoming void.

B. Correction and Repair:
   1. Correct deficiencies that do not conform to the Contract Documents.
   2. Repair non-conforming, damaged and defective work.

C. Protection:

1. Protect installed dampproofing in place from deterioration, and damage until Substantial Completion.
2. Remove protection when it's no longer needed and before Substantial Completion.

END OF SECTION

©AWCWEST 18E22 All rights reserved.
TAGDSC, ELMTA, CLSA10, CLSA2010, ELMTB, CLSB2010, CLSB3040

SECTION 07 19 00
WATER REPELLENTS

PART 1 - GENERAL

1.01 SUMMARY

A. Section Includes:
   1. Penetrating water repellent.
   2. Surface preparation.
   3. Site tests and inspections.
   4. Supplementary components and accessories normally furnished or necessary for a complete installation, whether or not such items are indicated on the Drawings or included in the Specifications.

1.02 SECTION REQUIREMENTS

A. Qualifications:
   1. Installer: Company or individuals must have at least 5 years' experience installing water repellents for at least 30 previous projects similar to this project in size, material, design, and complexity.
   2. Supervisors: Individuals must have at least 7 years' experience installing water repellents for at least 30 previous projects similar to this project in size, material, design, and complexity, including at least 2 years' supervisory experience directing and leading water repellent installers.

B. Submittals: Submit product data and written descriptions of specified qualifications.

C. Mockups: If an *ex-situ* exterior wall integrated mockup is required for this project, then integrate water repellents into the mockup as part of the work of this specification section.

D. Field Samples: Include *in-situ* mockups as part of the work of this specification section.
   1. Install at least one 100-square-foot field sample of each water repellent installation to verify selections made under sample submittal and to set quality standards for installation.
   2. The Architect reviews field samples for conformance to the Contract Documents and approves or rejects them as the standard by which subsequent work is evaluated.
   3. Revise field samples and repeat reviews, including arranging all revisions and paying all revision costs, until accepted in writing by the Architect. Final acceptance of water repellents is made from field samples.
   4. After acceptance, promptly identify and protect field samples for reference until Substantial Completion.
   5. Approved field samples may remain part of the work after being identified for future reference.

PART 2 - PRODUCTS

2.01 PENETRATING WATER REPELLENT

A. Description: Clear-drying, water-based silane or siloxane water repellent for weatherproofing (dampproofing) exterior walls exposed to normal weathering.

B. Manufacturer: Provide products manufactured by PROSOCO, Inc., or equal.

C. Products:
1. Cast-in-Place Concrete and CMU Surfaces: “Sure Klean Weather Seal Siloxane WB Concentrate”, or equal.

a. Porous Surfaces (e.g., CMU): Dilute to 1 part concentrate to not more than 9 parts water.

b. Semi-Porous Surfaces (e.g., Cast-in-Place Concrete and Precast Concrete): Dilute to 1 part concentrate to not more than 14 parts water.

c. Dense Surfaces: Dilute to 1 part concentrate to not more than 19 parts water.

D. Requisite Properties:
1. Visual Appearance: When compared visually to an untreated sample under the same lighting conditions, water repellents may not alter the color or sheen of the coated substrate, and must be invisible after application and over the life of the substrate. Confirm visual appearance by mockups and adjust products and applications as required.

2.02 ACCESSORIES

A. Mix Water: Provide fresh, clean, clear, potable water from a domestic source. Water must conform to ASTM C 1602 and be free of oil, grease, waxy films, curing compounds, release agents, and other deleterious materials, including salts, acids, alkalis, organic materials, detergents, and other matter that might negatively affect tile quality, durability, or performance.

A. Other Accessories: Provide accessories and secondary items normally furnished or necessary for a complete installation; or supplied, required, recommended, or accepted by the manufacturer for actual in-service conditions applicable to the project.

PART 3 - EXECUTION

3.01 INSTALLATION REQUIREMENTS

A. General:
1. Ensure proper supervision practices are followed at the project site before the installer begins work and at all times during installation.
2. Verify in-place construction, project conditions, and the work of other specification sections conform to the manufacturer’s instructions and other requirements and recommendations.
3. Verify substrates are dry and free of curing compounds, sealers, hardeners, and deleterious and other substances that might interfere with water repellent absorption.
4. Prepare substrates as required, recommended, or accepted by the manufacturer without limitation; and in a manner that does not result in any warranty or guarantee becoming void.
5. Install water repellents using materials and methods required, recommended, or accepted by the manufacturer, along with manufacturer-recommended accessories and techniques.
6. Do not exceed the application rate recommended by the manufacturer.
7. Completed work must match approved samples and mockups, as accepted by the Architect.
8. Installed water repellents must be warrantable. Do not install, correct, or replace water repellents in a manner that results in any warranty or guarantee becoming void.

B. Site Tests and Inspections:

1. General: Include site tests and inspections as part of the work of this specification section. The Owner's testing and inspection agency performs tests and inspections.

    a. Through-Wall Water Penetration Testing: Provide water absorption laboratory testing in conformance with the requirements of ASTM E 514.

    b. Surface Water Penetration Testing: Provide water absorption field testing in conformance with the requirements of ASTM Test Method C 1601.

    c. Water Absorption Testing: Provide RILEM Tube absorption field testing.

C. Correction and Repair:
    1. Correct deficiencies that do not conform to the Contract Documents.
    2. Repair non-conforming, damaged and defective work.

END OF SECTION

©AWCWEST 18E22 All rights reserved.
TAGDSC, ELMTB, CLSB2010, CLSB3090

SECTION 07 21 50
BUILDING ENCLOSURE INSULATION

PART 1 - GENERAL

1.01 SUMMARY

A. Section Includes:
   1. Stud bay concealed insulation.
   2. Installation materials.
   3. Supplementary components and accessories normally furnished or necessary for a complete installation, whether or not such items are indicated on the Drawings or included in the Specifications.

B. Related Requirements:
   1. Section 09 81 33 for acoustical insulation.

1.02 SECTION REQUIREMENTS

A. Submittals: Submit product data.

PART 2 - PRODUCTS

2.01 MANUFACTURERS

A. Fiberglass Blanket Insulation: Provide products manufactured by one of the following, or equal.
   1. CertainTeed Corp.
   2. Johns Manville.
   3. Knauf Insulation.
   4. Owens Corning Fiberglass Corp.

B. Rock Wool Blanket Insulation: Provide products manufactured by one of the following, or equal.
   1. Fibrex Insulations, Inc.
   2. ROXUL, Inc.
   3. Thermafiber, Inc.

2.02 CONCEALED STUD BAY INSULATION

A. Description: Asbestos-free mineral fiber blanket insulation conforming to ASTM C 665 requirements for Type I insulation requirements (blankets without membrane coverings), manufactured from slag and naturally occurring rock.

B. Mineral Wool Blanket Insulation: Provide one of the following, or equal.
   1. “COMFORTBATT” manufactured by ROXUL, Inc.
   2. “Thermafiber UltraBatt” manufactured by Owens Corning.

C. Requisite Properties:
   1. Minimum Thermal Resistance: Provide material having an R-value of at least R-4.2 per inch of thickness.

2. Minimum Size: Provide sizes required for a self-supporting friction fit.
3. Minimum Thickness: At least 6-1/4 inches.
4. Minimum Density: At least 0.75 pounds per cubic foot.
5. Facing: None.

2.03 INSTALLATION MATERIALS

A. Insulation Hangers:
1. Application: Used to attach insulation to clean, dry, smooth, non-porous solid surfaces.
2. Manufacturer: Provide products manufactured by AGM Industries, Inc., or equal.
3. Products: Provide the following, or equal.

a. Anchors: “TACTOO Insul-Hangers” adhesively attached spindle-type anchors.

b. Adhesive: “BOSS 348 Multi-Purpose Construction Adhesive” manufactured by Accumetric, LLC or other VOC-compliant insulation hanger adhesive.

c. Insulation Standoff: One-inch “Clutch Clip”.

d. Insulation Retaining Washers: “Style RC 200” round or “SC 250” square washers.

4. Requisite Properties:

a. Base Plate and Insulation Standoff and Retaining Washers: At least 2-inch square by at least 0.149-inch (MSG 28) base metal thickness galvanized perforated steel sheet.

b. Retaining Washers: At least 1-1/2-inch square or diameter by at least 0.149-inch (MSG 28) base metal thickness galvanized perforated steel sheet.

c. Spindle: At least 0.106-inch diameter (SWG 12), zinc-coated wire, depth to suit depth of insulation indicated.

d. Adhesive: Adhesive used with impaling pins must either be manufactured or accepted by the insulation hanger manufacturer. “Peel and press” hangers with self-adhering adhesive backings are prohibited.

B. Mechanical Fasteners: Tape, staples, and other devices for fastening insulation supplied, required, recommended, or accepted by the insulation manufacturer.

C. Hanger Wire: At least 0.106-inch diameter (SWG 12) soft temper zinc-coated wire conforming to ASTM A 641, Class 3 or A coating.

D. Vapor-Retarder Tape: At least 4-inch wide pressure-sensitive tape supplied, required, recommended, or accepted by the manufacturer for sealing insulation facings at joints and penetrations.

E. Adhesive: Supplied, require, recommended, or accepted by the insulation manufacturer to bond insulation securely to substrates indicated without damaging insulation or substrates.

2.04 ACCESSORIES

A. Accessories: Provide accessories and secondary items normally furnished or necessary for a complete installation; or supplied, required, recommended, or accepted by the manufacturer for actual in-service conditions applicable to the project.

PART 3 - EXECUTION

3.01 INSTALLATION REQUIREMENTS

A. General:
1. Ensure proper supervision practices are followed at the project site before the installer begins work and at all times during installation.
2. Verify in-place supporting and adjacent construction conforms to the manufacturer’s requirements or recommendations, and satisfies all other conditions that might affect the quality of installation or the durability, appearance, or performance of installed insulation and adjacent items.
3. Install insulation using materials and methods required, recommended, or accepted by the manufacturer, along with manufacturer-recommended accessories and techniques.
4. Extend insulation to envelop entire area insulated. Cut and fit tightly around obstructions and fill voids with insulation. Remove projections that interfere with placement.
5. Provide sizes to fit applications indicated and selected from manufacturer's standard thicknesses, widths, and lengths. Apply single layer of insulation to produce thickness indicated unless multiple layers are otherwise shown or required to make up total thickness.
6. Installed insulation must be warrantable. Do not install, correct, or replace insulation in a manner that results in any warranty or guarantee becoming void.

B. Special Techniques:
1. Stud Bay Insulation: Install insulation in cavities formed by framing members.
    a. Use insulation that fills the cavities. If more than one length is required to fill the cavities, then provide lengths that will produce a snug fit between ends.
    b. Place insulation in cavities formed by framing members to produce a friction fit between edges of insulation and adjoining framing members.
    c. Maintain 3-inch clearance around recessed lighting fixtures not rated for or protected from contact with insulation.
    d. Stuff loose-fill insulation into miscellaneous voids and cavity spaces where shown. Compact to roughly 40 percent of normal maximum volume.
    e. For metal-framed wall cavities higher than 96 inches, support unfaced blankets mechanically and support faced blankets by taping insulation flanges to metal stud flanges.
2. Ceiling Insulation:
    a. Install blanket insulation above ceilings where indicated.
    b. Maintain 3-inch clearance of insulation around recessed lighting fixtures.

C. Correction and Repair:
1. Correct deficiencies that do not conform to the Contract Documents.
2. Repair non-conforming, damaged and defective work.

D. Protection:
1. Protect installed insulation in place from deterioration and damage until covered.
2. Remove protection when it’s no longer needed and before Substantial Completion.

END OF SECTION

©AWCWEST 18E22 All rights reserved.
RSTLNE. TAGDSC, ELMTA, CLSA2010, CLSA4010, ELMTB, CLSB2010, CLSB3010, CLSB3040

SECTION 07 25 13
SHEET WEATHER-RESISTIVE BARRIERS

PART 1 - GENERAL

1.01 SUMMARY

A. Section Includes:
   1. Polyethylene sheet weather-resistive barriers.
   2. Asphalt-saturated sheet weather-resistive barriers.
   3. Self-adhering sheet flashings integral to sheet weather-resistive barriers.
   4. Supplementary components and accessories normally furnished or necessary for a complete installation, whether or not such items are indicated on the Drawings or included in the Specifications.

B. Related Requirements:
   1. Section 07 65 26 for through-wall, opening, penetration, and transition SASM flashings, installation materials, and accessories not integral to WRB installation.

1.02 SECTION REQUIREMENTS

A. Qualifications:
   1. Manufacturer: Company or individuals must have at least 10 years' experience manufacturing WRBs installed on at least 200 previous projects similar to this project in size, material, design, and complexity.
   2. Installer: Company or individuals must have at least 5 years' experience installing WRBs for at least 30 previous projects similar to this project in size, material, design, and complexity.
   3. Supervisors: Individuals must have at least 7 years' experience installing WRBs for at least 30 previous projects similar to this project in size, material, design, and complexity, including at least 2 years' supervisory experience directing and leading WRB installers.
   4. Manufacturer's Representative: Individuals must have at least 5 years' technical field experience performing manufacturer's services for at least 50 previous projects similar to this project in size, material, design, and complexity.

B. Submittals: Submit product data, shop drawings, and written descriptions of specified qualifications.

C. Preinstallation Meeting:
   1. Hold a meeting after submittal approval and at least 10 business days before beginning installation.
   2. During the meeting, review the Contract Documents, submittals, project conditions, and installation sequence and methods, including special details and conditions that might affect installation
   3. Identify and discuss adverse or unfavorable conditions detrimental to protecting stored materials or to installation; or to the quality, durability, or performance of installed WRBs. Resolve each condition.
   4. Finalize construction schedule.
   5. Record significant discussions and distribute meeting minutes. Do not begin installation until disagreements are successfully resolved to the satisfaction of all parties.

D. Mockups: If an *ex-situ* exterior wall integrated mockup is required for this project, then integrate WRBs into the mockup as part of the work of this specification section.

E. Warranty:
   1. Manufacturer Warranty: Furnish to the Owner a written manufacturer warranty for products, components, and accessories against all patent and latent defects, and incipient and catastrophic failure for 10 years.
   2. Installer Guarantee: Furnish to the Owner a written guarantee for the work of this specification section against all defects in materials and workmanship for 2 years from date of acceptance. Guarantees must be properly prepared and signed on the guarantee form in Division 01.

PART 2 - PRODUCTS

2.01 POLYETHYLENE SHEET WRB

A. Description: Non-woven, non-perforated, non-absorbing, breathable spunbonded HDPE WRB that that (1) resists air flow, bulk water, and wind driven rain; (2) channels water and moisture to the outside of the building envelope; and (3) has a current evaluation report from the NES or ICC-ES demonstrating code compliance when installed as a WRB.

B. Application: Applied to the exterior side of exterior building walls directly over the exterior wall sheathing as a base layer WRB.

C. Products: “Tyvek CommercialWrap” (ICC-ES Report No. ESR-2375) manufactured by E.I. DuPont de Nemours & Co. (Dupont), or equal.

D. Requisite Properties:
   1. Minimum Basis Weight: At least 2.7 ounces per square yard, when measured in compliance with TAPPI Test Method T 410.
   2. Minimum Roll Width: 10 feet.
   3. Maximum UV Exposure Limit: Cover within 365 days.

E. Performance Requirements:
   1. Maximum Water Vapor Permeance: Not more than 23 perms, when measured in compliance with ASTM E 96, Procedure A.
   2. Minimum Water Resistance: At least 280, when tested in compliance with AATCC 127.
   3. Minimum Tensile Strength: At least 35 lbf per inch, when tested in compliance with ASTM D 882.
   4. Surface-Burning Characteristics: wall surfacing having a maximum FSI Value of 10 or less and a maximum SDI Value of less than 10 (Class A), when tested in conformance with ASTM E 84.

F. Accessories:
   1. Primer: “Super 77” multi-purpose adhesive manufactured by 3M Corp., or equal.
   2. Straight Flashing Material:

      a. Description: 30-mil thick self-adhering flashing material with an elasticized polyethylene laminate face coated with butyl adhesive.

      b. Application: Applied to rectangular window flanges, sill plates, corners, and joints.

      c. Product: “StraightFlash”, or equal,

      d. UV Exposure Limit: Cover within 120 calendar days.

3. Flexible Flashing Material:

    a. Description: 70-mil thick self-adhering elastic flexible flashing tape with a spunbonded polyethylene laminate face coated with butyl adhesive.

    b. Application: Applied to recessed and curved window flanges, sill plates, corners, and joints.

    c. Product: “FlexWrap NF”, or equal.

    d. UV Exposure Limit: Cover within 120 calendar days.
4. Seam Tape:

    a. Description: Oriented polypropylene film coated with acrylic adhesive

    b. Product: “Tyvek Tape”, or equal.
5. Transition Flashing Material:

    a. Description: Used where WRB transitions to another system or parapet.

    b. Products: Specified in Section 07 65 26.
6. Fasteners:

    a. Metal Stud Construction: “Tyvek Wrap Cap” fastening system, including “Wrap Cap Screws” and 2-inch diameter “Wrap Cap” HDPE washers.

    b. Wood Stud Construction: “Tyvek Wrap Cap” fastening system, including #4 nails with large one-inch plastic cap fasteners.
7. Primer, Adhesive, Sealant, and Other Accessories: Provide primer, adhesive, sealant, other accessories, and similar secondary items supplied, required, recommended, or accepted by the manufacturer and as necessary for a complete installation.

2.02 ASPHALT-SATURATED SHEET WRB

A. Description: Weather-resistant building paper conforming to Federal Specification FS UU-B-790a Type I (barrier paper), Grade D (water vapor permeable), Style 2 (uncreped, not reinforced, saturated) and having a current evaluation report from the NES or ICC-ES demonstrating code compliance when installed as a WRB.

B. Application: Applied to the exterior side of exterior building walls directly behind exterior Portland cement plaster to separate the plaster assembly from the base layer WRB.

C. Products: Provide one of the following, or equal.
    1. “Davis Wire 60 Minute” (ICC-ES Report No. ESR-2595) manufactured by Davis Wire Corp.
    2. “Super Jumbo Tex 60 Minute” (ICC-ES Report No. ESR-1027) manufactured by Fortifiber Corp.
    3. “GMCraft 60 Minute” (ICC-ES Report No. ESR-2376) manufactured by GMC Roofing & Building Paper Products, Inc.

D. Requisite Properties:
    1. Minimum Basis Weight: At least 6 pounds per 100 square feet (approximately 9.0 ounces per square yard).
    2. Minimum Roll Width: At least 40 inches.
    3. Maximum UV Exposure Limit: Cover within 30 days.

E. Performance Requirements:
   1. Minimum Water Vapor Permeance: At least 5 perms, when measured in compliance with ASTM E 96, Procedure B.
   2. Minimum Water Resistance: At least 60 minutes, when tested in compliance with ASTM D 779.
   3. Minimum Tensile Strength: At least 70 lb^f per inch, when tested in compliance with ASTM D 882.

F. Accessories:
   1. Fasteners: At least 2-inch long, finishing washer head, zinc-plated steel screw fasteners specified in Section 05 05 23, with at least 2-inch diameter HDPE washers.
   2. Sealing Material, Repair Tape, and Other Accessories: Provide mastic, adhesive, pressure-sensitive adhesive tape, and other items supplied, required, recommended, or accepted by the manufacturer and compatible with base layer WRB where in contact.
   3. Sealant: Specified in Section 07 92 00 Joint Sealants. Verify sealant's compatibility with and adequate adhesion to substrates prior to installing sealant in the field. Perform testing in conformance with ASTM C1193, Appendix X.1, Method B.

2.03 ACCESSORIES

A. UV Stable Sheet:
   1. Application: Used to cover primary WRB where primary WRB might be permanently exposed to UV.
   2. Product: Provide one of the following, or equal.
      a. "DELTA-FASSADE S" manufactured by Dörken Systems Inc.
      b. "RevealShield SA" manufactured by VaproShield USA.

B. Sealant:
   1. Description: Silicone sealant conforming to ASTM C 920 requirements for Type S, Grade NS, Class 25.
   2. Product: "758" manufactured by Dow Corning Corp., or equal.
   3. Color: White.

C. Other Accessories: accessories and secondary items normally furnished or necessary for a complete installation; or supplied, required, recommended, or accepted by the manufacturer for actual in-service conditions applicable to the project.

PART 3 - EXECUTION

3.01 INSTALLATION REQUIREMENTS

A. General:
   1. Ensure proper supervision practices are followed at the project site before the installer begins work and at all times during installation.
   2. Verify in-place supporting and adjacent construction conforms to the manufacturer's requirements or recommendations, and satisfies all other conditions that might affect the quality of installation or the durability, appearance, or performance of installed WRBs and adjacent items.
   3. Install WRBs using materials and methods required, recommended, or accepted by the manufacturer, along with manufacturer-recommended accessories and techniques.

4. Perform cutting and fitting as required or necessary for an accurate fit and complete installation.
5. Securely attach WRBs in place to supporting construction.
6. Installed WRBs must be warrantable. Do not install, correct, or replace WRBs in a manner that results in any warranty or guarantee becoming void.

B. Special Techniques:
1. Placing:

    a. Starting at the bottom of the wall, install WRB horizontally over sheathing and securely attach with a minimum of fasteners.

    b. Lap WRB in shingle fashion at least 3 inches at horizontal seams, and 6 inches at vertical seams. Stagger vertical joints.

    c. To prevent direct contact between metal lath and accessories, and to ensure water tightness, lap the WRB over flanges of plaster accessories. Continue weather barrier uninterrupted behind plaster control joints.

    d. Integrate WRB with flashing materials at windows, doors, and other penetrations to properly discharge water to the exterior face of the wall. Omitted or improperly installed flashing must be corrected prior to installing the WRB.

    e. Seal all joints and penetrations through the WRB with tape.

    f. Continuously tape WRB at window and door openings, and to through-wall flashings.
2. Penetrations: To create an airtight seal between penetrating items and WRBs, seal joints caused by pipes, conduits, electrical boxes, and similar items penetrating WRBs with vapor-retarder tape.

    a. Cut WRB to fit closely and neatly.

    b. Continuously seal edges around penetrations.
3. Repair: Repair tears, holes and other damage with tape; or if too large, with at least 12-inch wide strips or remnants of WRB material centered over damaged areas and at least 6 inches larger all around, whichever is greater.

    a. Continuously tape or seal top layer edges of repair material to bottom layer.

    b. Weather barrier must be free from holes, tears, and punctures at the end of installation.

C. Interface with Adjacent Items: Provide materials, components, and accessories normally furnished or necessary to attach WRB tightly and flat with as few fasteners as possible, and only enough to hold the WRB in place until the final wall finish material is installed.

D. Correction and Repair:
1. Correct deficiencies that do not conform to the Contract Documents.
2. Repair non-conforming, damaged and defective work.
3. Replace soiled items that cannot be cleaned to the same condition as new.

E. Protection:
1. Protect installed WRBs in place from soiling, deterioration, and damage until covering.
2. Remove protection when it’s no longer needed and before covering.

END OF SECTION

©AWCWEST 18E22 All rights reserved.
RSTLNE, TAGDSC, ELMTB, CLSB2010, CLSB3080

SECTION 07 31 13

ASPHALT SHINGLES

PART 1 - GENERAL

1.1 SUMMARY

A. Section Includes:
   1. Asphalt shingles.
   2. Underlayment.
   3. Roof and eave vents.
   4. Supplementary components and accessories normally furnished or necessary for a complete installation, whether or not such items are indicated on the Drawings or included in the Specifications.

1.2 SECTION REQUIREMENTS

A. Qualifications:
   1. Manufacturer: Company or individuals must have at least 10 years' experience manufacturing shingles installed on at least 200 previous projects similar to this project in size, material, design, and complexity.
   2. Installer: Company or individuals must have at least 5 years' experience installing shingles for at least 30 previous projects similar to this project in size, material, design, and complexity.
   3. Supervisors: Individuals must have at least 7 years' experience installing shingles for at least 30 previous projects similar to this project in size, material, design, and complexity, including at least 2 years' supervisory experience directing and leading shingle installers.

B. Submittals: Submit product data, shop drawings, samples, and written descriptions of specified qualifications.

C. Maintenance Material Submittals:
   1. Before Final Completion, deliver to the Owner extra stock materials to replace those worn or damaged as a result of normal occupancy.
   2. Furnish at least 2 percent of the total installed for each shingle type, color, composition, grade, finish, and variety, but not less than one unopened box or container.

D. Preinstallation Meeting:
   1. Hold a meeting after submittal approval and at least 10 business days before beginning installation.
   2. During the meeting, review the Contract Documents, submittals, project conditions, and installation sequence and methods, including special details and conditions that might affect installation
   3. Identify and discuss adverse or unfavorable conditions detrimental to protecting stored materials or to installation; or to the quality, durability, appearance, or performance of installed shingles. Resolve each condition.
   4. Finalize construction schedule.
   5. Record significant discussions and distribute meeting minutes. Do not begin installation until disagreements are successfully resolved to the satisfaction of all parties.

E. Regulatory Requirements:
   1. Fire Resistance Rating: Roof coverings must conform to UL 790 fire resistance requirements for Class A rating. (effective against severe fire test exposures)

F. Manufacturer Warranty: Furnish to the Owner a written manufacturer warranty for products, components, and accessories against all patent and latent defects, and incipient and catastrophic failure for 25 years; and for finishes against color fading, chalking, cracking, checking, peeling, and adhesive failure for 20 years.

G. Installer Guarantee: Furnish to the Owner a written guarantee for the work of this specification section against all defects in materials and workmanship for 5 years from date of acceptance. Guarantees must be properly prepared and signed on the guarantee form in Division 01.

PART 2 - PRODUCTS

2.1 MANUFACTURERS

A. Manufacturers: Provide products manufactured by one of the following, or equal.
   1. Owens Corning.
   2. GAF Materials Corp.
   3. Atlas Roofing Corp.

2.2 COMPOSITE SHINGLES

A. Description: Glass-fiber reinforced, SBS-modified, mineral-granule surfaced asphalt shingles conforming to ASTM D 3462.

B. Product: “TruDefinition Duration Cool Shingles” manufactured by Owens Corning, or equal.

C. Requisite Properties:
   1. Color: “Sand Castle” and “Shasta White”.

2.3 ACCESSORIES

A. Ventilation and Attic Vents:
   1. Products: Indicated on the Drawings or selected by the Architect, or equal.
   2. Requisite Properties:
      a. Size: Indicated on the Drawings or selected by the Architect.
      b. Finish: Indicated on the Drawings or selected by the Architect.

B. Roofing Underlayment: ASTM D 226, Type I, #15 composite-saturated and coated organic felt.

C. Flashing: Specified in Section 07 62 00.

D. Nails: Hot-dip galvanized, conforming to ASTM A 641, Class 1 and sized to penetrate deck at least 3/4-inch or through thickness of deck or batten, or as otherwise required by the shingle manufacturer.

E. Asphalt Roofing Cement: ASTM D 4586, Type II, asbestos free.

F. Elastomeric Sealant: ASTM C 920, silicone-based joint sealant; of Type M or S, Grade NS, Class 25, Use NT related to exposure, and, as applicable to joint substrates indicated, Use O.

G. Other Accessories: Provide accessories and secondary items normally furnished or necessary for a complete installation; or supplied, required, recommended, or accepted by the manufacturer for actual in-service conditions applicable to the project.

PART 3 - EXECUTION

3.1 INSTALLATION REQUIREMENTS

A. General:
   1. Ensure proper supervision practices are followed at the project site before the installer begins work and at all times during installation.
   2. Verify in-place supporting and adjacent construction conforms to the manufacturer's requirements or recommendations and satisfies all other conditions that might affect the quality of installation or the durability, appearance, or performance of installed and adjacent items.
   3. Install shingles using materials and methods required, recommended, or accepted by the manufacturer, along with manufacturer-recommended accessories and techniques.
   4. Set items true to line, to required levels and lines, and plumb, level, and square, without warp or rack, with flush well-fitted joints, and in alignment with adjacent construction.
   5. Securely attach shingles in place to supporting construction.
   6. Installed shingles must be warrantable. Do not install, correct, or replace shingles in a manner that results in any warranty or guarantee becoming void.

B. Special Techniques:
   1. Underlayment Installation:
      a. General: Install underlayment in conformance with shingle manufacturer's written recommendations and recommendations in NRCA publication, "*The NRCA Roofing and Waterproofing Manual*".
      b. Double-Layer Roof Felt Underlayment: Install perpendicular to roof slope in parallel courses. Install a 19-inch- wide starter course at eaves and completely cover with full-width second course. Install succeeding courses lapping previous courses 19 inches in shingle fashion. Lap ends a minimum of 6 inches. Stagger end laps between succeeding courses at least 72 inches. Fasten with felt underlayment nails.
      c. Metal-Flashed Open-Valley Underlayment: Install 2 layers of 36-inch- wide roof felt underlayment centered in valley. Stagger end laps between layers at least 72 inches. Lap ends of each layer at least 12 inches in direction to shed water, and seal with asphalt roofing cement. Fasten each layer to roof deck with felt underlayment nails. Lap roof-deck underlayment over first layer of valley underlayment at least 6 inches.
   2. Metal Flashing Installation:
      a. Install metal flashings and other sheet metal to conform to requirements in Section 07 62 00.
      b. Install metal flashings in conformance with shingle manufacturer's written recommendations and recommendations in NRCA publication, "*The NRCA Roofing and Waterproofing Manual*".
      c. Step Flashings: Install with 3-inch headlap extending over the underlying shingle and up the vertical surface. Install with lower edge of flashing just upslope of, and concealed by, butt of overlying shingle. Fasten to roof deck only.
      d. Open-Valley Flashings: Install centered in valleys, lapping ends at least 8 inches in direction to shed water. Fasten upper end of each length to roof deck beneath overlap.

3. Shingle Installation:
    a. Install shingles in conformance with manufacturer's instructions and recommendations and in conformance with NRCA publication, "*The NRCA Roofing and Waterproofing Manual*".
    b. Maintain uniform shingle exposure and coursing throughout roof.
    c. Extend shingles 2 inches over eave fasciae.

C. Correction and Repair:
    1. Correct deficiencies that do not conform to the Contract Documents.
    2. Repair non-conforming, damaged and defective work.
    3. Repair damaged finishes. Restore finishes so that no evidence remains of corrective work. Return to the factory those items that either cannot be refinished in the field, or that contain components that cannot be refinished in the field. Make required alterations and either refinish the entire item or provide a new item.

D. Protection:
    1. Protect installed shingles in place from soiling, deterioration, and damage until Substantial Completion.
    2. Remove protection when it's no longer needed and before Substantial Completion.

END OF SECTION

©AWCWEST 20A01 All rights reserved.

SECTION 07 54 19
PVC ROOFING

PART 1 - GENERAL

1.01 SUMMARY

A. Section Includes:
   1. PVC membrane roofing.
   2. Roofing insulation and cover board.
   3. Installation materials.
   4. Site tests and inspections.
   5. Supplementary components and accessories normally furnished or necessary for a complete installation, whether or not such items are indicated on the Drawings or included in the Specifications.

1.02 SECTION REQUIREMENTS

A. Qualifications:
   1. Manufacturer: Company or individuals must have at least 10 years' experience manufacturing roofing installed on at least 200 previous projects similar to this project in size, material, design, and complexity.
   2. Installer: Company or individuals must have at least 5 years' experience installing roofing for at least 30 previous projects similar to this project in size, material, design, and complexity.
   3. Supervisors: Individuals must have at least 7 years' experience installing roofing for at least 30 previous projects similar to this project in size, material, design, and complexity, including at least 2 years' supervisory experience directing and leading roofing installers.
   4. Manufacturer's Representative: Individuals must have at least 5 years' technical field experience performing manufacturer's services for at least 50 previous projects similar to this project in size, material, design, and complexity.

B. Submittals: Submit product data, shop drawings, samples, written descriptions of specified qualifications, and manufacturer's representative reports.

C. Preinstallation Meeting:
   1. Hold a meeting after submittal approval and at least 10 business days before beginning installation.
   2. During the meeting, review the Contract Documents, submittals, project conditions, and installation sequence and methods, including special details and conditions that might affect installation
   3. Identify and discuss adverse or unfavorable conditions detrimental to protecting stored materials or to installation; or to the quality, durability, or performance of installed roofing. Resolve each condition.
   4. Finalize construction schedule.
   5. Record significant discussions and distribute meeting minutes. Do not begin installation until disagreements are successfully resolved to the satisfaction of all parties.

D. Field Samples: Include *in-situ* mockups as part of the work of this specification section.
   1. Install at least one 100-square-foot field sample of each roofing membrane installation to verify selections made under sample submittal and to set quality standards for installation. Demonstrate surface preparation, crack repair, and joint, and corner preparation.

2. Perform sheet moisture test in conformance with ASTM D 4263.
3. Test roofing membrane adhesion to verify surface preparation.
4. The Architect reviews field samples for conformance to the Contract Documents and approves or rejects them as the standard by which subsequent work is evaluated.
5. Revise field samples and repeat reviews, including arranging all revisions and paying all revision costs, until accepted in writing by the Architect. Final acceptance of roofing is made from field samples.
6. After acceptance, promptly identify and protect field samples for reference until Substantial Completion.
7. Approved field samples may remain part of the work after being identified for future reference.

E. Warranty:
1. Manufacturer Warranty: Furnish to the Owner a written manufacturer warranty for products, components, and accessories against all patent and latent defects, and incipient and catastrophic failure for 10 years.
2. Installer Guarantee: Furnish to the Owner a written guarantee for the work of this specification section against all defects in materials and workmanship for 2 years from date of acceptance. Guarantees must be properly prepared and signed on the guarantee form in Division 01.

PART 2 - PRODUCTS

2.01 MANUFACTURERS

A. Provide products manufactured by one of the following, or equal.
1. Carlisle SynTec.
2. Sika Sarnafil, Inc.

2.02 ROOFING MEMBRANE

A. Description: Feltback reinforced PVC roofing membrane conforming to ASTM D 4434, Type II, Grade 1.
1. Unreinforced membranes are prohibited.
2. Private l.abel and third-party-manufactured membranes are prohibited.

B. Product: Provide “Sarnafil G410-15” membrane manufactured by Sika Corp., or equal. (ICC-ES Report No. ESR-1157 and Los Angeles Research Report No. RR 24852).

C. Requisite Properties:
1. Thickness: 60 mils (1.5mm), when measured in conformance with ASTM D 638.
    a. Actual thickness must be at least 60 mils.
    b. Thickness variations permitted in ASTM D 4434 are prohibited for this project.
    c. At least 45 percent of the overall polymer actual thickness must be above the reinforcement scrim.
2. Color: White.
3. Backing: At least 9-ounce-per-square-yard factory-applied felt backing (fleece backed).
4. Reinforcing Scrim: Fiberglass.
5. Roof System Attachment Method: Fully-adhered system.

D. Performance Requirements:

1. Minimum Tensile Strength: At least 1,500 pounds per square inch, when tested in conformance with ASTM D 638.
2. Minimum Elongation: At least 250 percent (machine direction) and 200 percent (cross direction), when tested in conformance with ASTM D 638.
3. Minimium Seam Strength: At least 75 percent of tensile strength, when tested in conformance with ASTM D 638.
4. Minimum Tearing Resistance: At least 15 pounds-force, when tested in conformance with ASTM D 1004.
5. Maximum Water Absorption: Not more than 2.0 percent by weight, when tested in conformance with ASTM D 570.

2.03 ROOFING INSULATION AND COVER BOARD

A. Polyisocyanurate Insulation:
1. Description: Rigid, closed-cell board insulation consisting of a polyisocyanurate (polyiso) foam bonded to glass fiber reinforced organic mat facers on both sides.
2. Products:
    a. Flat Insulation: “Sarnatherm”, or equal.
    b. Tapered Insulation: “Tapered Sarnatherm”, or equal.
3. Requisite Properties:
    a. Long Term Thermal Resistance: Assumed LTTR value of 5.6 per inch of thickness. If proposed insulation LTTR is less than 5.6 per inch, seek a written interpretation from the Architect to determine the necessary minimum thickness required to achieve specified R-values.
    b. Minimum Compressive Strength: At least 20 pounds per square inch, when measured at either 5 percent deformation or yield, whichever occurs first.
    c. Minimum Density: At least nominal 2.0 pounds per cubic foot when measure in conformance with ASTM 1622.
    d. Minimum Tapered Insulation Thickness: At least 1-1/2 inches.
    e. Tapered Insulation Main Slope: 1:48 (1/4-inch in 12 inches).

B. Cover Board:
1. Application: Used in horizontal applications as an overlayment for roof insulation and in vertical applications as a liner for the roof side of parapet walls.
2. Description: Commercial glass mat faced exterior sheathing conforming to ASTM C 1177 requirements for glass mat gypsum substrate.
3. Products:
    a. Bareback Adhered Membrane and Vertical Applications: Provide “DensDeck Prime” manufactured by GP Building Products, or equal.
    b. Mechanically Fastened and Feltback Membrane Applications: Provide “DensDeck” manufactured by GP Building Products, or equal.
4. Horizontal Applications: Provide 1/4-inch thick panels over insulation; provide at least 1/2-inch thick cover board directly over metal decks without insulation.
5. Vertical Applications: Provide 1/2-inch thick panels.
    a. 1/4-inch roof cover board and gypsum sheathing are prohibited for vertical applications.

b. Roof cover boards installed in vertical applications (including as a liner for the roof side of parapet walls) must be installed by the same roofing installer that installs roof cover boards in horizontal applications (including as an overlayment for roof insulation).

c. Non-conformance with the above may negatively affect the specified warranty.

6. Wall Backings:

a. Light-duty wall backings specified in Section 05 40 00 must be installed to support reglets or termination bars in vertical applications, including on the roof side of parapet walls.

b. Wall backings must be installed over metal stud framing members before the roofing installer installs roof cover boards.

2.04 INSTALLATION MATERIALS

A. Tape:
1. Contaminated Material Locations: “Aluminum Tape”, or equal, aluminum foil tape with a pressure sensitive adhesive applied to one side for bonding to substrates.
2. Elsewhere: Provide “Multi-Purpose Tape”, or equal, high rubber content isobutylene-isoprene copolymer tape supplied, required, recommended, approved, or accepted by the manufacturer.

B. Adhesive: The following, or as supplied, required, recommended, approved, or accepted by the manufacturer for the substrate indicated and the environmental conditions under which the roofing membrane is installed.
1. Insulation and Roof Cover Board Adhesive: “Sarnacol 2163 Board Adhesive” or “Sarnacol OM Board Adhesive”, or equal, 2-component foamable polyurethane adhesive.
2. Bareback Membrane Adhesive: “Sarnacol 2121” water-based dispersion adhesive.
3. Feltback Membrane Adhesive: “Sarnacol AD Feltback Membrane Adhesive” or “Sarnacol OM Feltback Membrane Adhesive”, or equal, 2-component foamable polyurethane adhesive.
4. Flashing Adhesive: “Stabond U148A” low-VOC reactivating-type adhesive used to attach membrane to flashing substrate.

C. Sealant: “Multi-Purpose Sealant” single-component urethane sealant, or other sealant supplied, required, recommended, or accepted by the manufacturer.

D. Solvent Cleaner: “Sarnasolv” VOC-compliant solvent cleaner or other cleaning agent supplied, required, recommended, or accepted by the manufacturer.

2.05 ACCESSORIES

A. Flashing Membranes: “Sarnafil G410 Flashing Membrane”, or equal, fiberglass reinforced PVC membrane.
1. Thickness: 60 mils (1.5mm).
2. Color: Match roofing membrane color.

B. Membrane-Clad Flashings:
1. Stainless Steel: “Sarnaclad-SS”, or equal, membrane-clad flashings consisting of at least a 34-mil thick roofing membrane material laminated to one side of at least 0.0250-inch thick (USSG 24) stainless steel. Except for 300 series stainless steel, uncoated and painted metal flashings and accessories are prohibited.

C. Flashing Accessories:

1. Reglets: “Sarnareglet”, or equal, 2-1/4-inch wide extruded aluminum profile with pre-drilled holes for anchors. Attach termination bar to substrate with stainless steel fasteners installed into the pre-drilled holes.
2. Termination Bars:

    a. Attaching Membrane to Roof Deck or Walls and Curbs at Terminations, Penetrations, and at Incline Changes of the Substrate: Provide “Sarnastop”, or equal, low profile, one-inch wide by 1/8-inch thick flat extruded aluminum bar having predrilled holes every 6 inches on center.

    b. Secondary Membrane Attachment for High Wind Conditions: Provide “Sarnabar”, or equal, FMG-approved, heavy-duty, 14-gage, galvanized roll-formed steel bar having pre-punched holes every inch on center to allow various spacing options.
3. Prefabricated Flashings:

    a. Prefabricated Corners: “Sarnacorners”, or equal, 60-mil prefabricated corners.

    b. Single-Pipe Penetration Pipe Boots: “Sarnastack Universal”, or equal, 60-mil thick prefabricated membrane flashings for flashing single rooftop vent stacks and pipes.

    c. Single Penetration: “Open Post Flashing”, or equal, 60-mil thick prefabricated membrane flashings for flashing single obstructed rooftop conduits and pipes.

    d. Multiple Penetrations: Provide cone or pelican hood flashing details fashioned from membrane-clad flashings or from roofing membrane material, as required, recommended, or accepted by the manufacturer.

D. Roof Walkways:
1. Description: High-percentage recycled content PVC heavily textured and profiled rolled-out walkway protection mat
2. Application: Used to protect roofing membrane from mechanical abuse.
3. Product: “Crossgrip Walkway”, or equal, rolled-out walkway protection mat.
4. Requisite Properties:

    a. Size: 36 inches wide by 9/16-inch thick.

    b. Color: Provide light gray walkways; dark-colored walkways are prohibited.

    c. Layout: Conform to the lengths and locations indicated on shop drawings.

    d. Installation: Where design wind speeds exceed 94 miles per hour, and where finished roof slopes exceed 1/2-inch per foot, secure with loops of roofing membrane welded to field sheet. Elsewhere, loose lay on top of installed roof membrane.

E. Other Accessories: Provide other accessories and secondary items normally furnished or necessary for a complete installation; or supplied, required, recommended, or accepted by the manufacturer for actual in-service conditions applicable to the project.

PART 3 - EXECUTION

3.01 INSTALLATION REQUIREMENTS

A. General:
1. Ensure proper supervision practices are followed at the project site before the installer begins work and at all times during installation.

2. Verify in-place construction, project conditions, and the work of other specification sections conform to the manufacturer's instructions and other requirements and recommendations.
3. Verify substrates are dry and free of curing compounds, sealers, hardeners, and deleterious and other substances that might interfere with roofing adhesion,
4. Prepare substrates as required, recommended, or accepted by the manufacturer without limitation; and in a manner that does not result in any warranty or guarantee becoming void.
5. Install roofing using materials and methods required, recommended, or accepted by the manufacturer, along with manufacturer-recommended accessories and techniques.
6. Only install roofing under conditions that ensure membrane is free from blemishes and defects.
7. Completed work must match approved samples and mockups, as accepted by the Architect.
8. Installed roofing must be warrantable. Do not install, correct, or replace roofing in a manner that results in any warranty or guarantee becoming void.

B. Site Tests and Inspections:
1. General: Include site tests and inspections as part of the work of this specification section. The Owner's testing and inspection agency performs tests and inspections.
2. Required Tests:

    a. Adhesion Testing: Before beginning work in each area, conduct adhesion tests with manufacturer's representative present at start of installation over each new substrate.

    b. Weld Testing: To ensure properly-welded seams, perform test welds in the morning before starting, after lunch, and anytime there is a change in weather. Before Final Completion, deliver to the Owner signed, dated, and time stamped test welds as a condition of project closeout.

    c. Electric Field Vector Mapping (EFVM) Testing: After roofing is complete, but before overlying construction is placed perform EFVM testing.

    d. Flood Testing: After roofing is complete, but before overlying construction is placed, each deck area is flood tested for leaks in conformance with ASTM D 5957.

C. Correction and Repair:
1. Correct deficiencies that do not conform to the Contract Documents.
2. Repair non-conforming, damaged and defective work.

D. Protection:
1. Protect installed roofing in place from deterioration and damage until Substantial Completion.
2. Remove protection when it's no longer needed and before Substantial Completion.

END OF SECTION

©AWCWEST 18E22 All rights reserved.
RSTLNE, TAGDSC, ELMTB, CLSB3010, CLSB3090

SECTION 07 62 00
SHEET METAL FLASHING AND TRIM

PART 1 - GENERAL

1.01 SUMMARY

A. Section Includes:
   1. Shop-fabricated or field-flashings used for roofing and flashing applications.
   2. Supplementary components and accessories normally furnished or necessary for a complete installation, whether or not such items are indicated on the Drawings or included in the Specifications.

1.02 SECTION REQUIREMENTS

A. Delegated Design Requirements:
   1. Engineer, fabricate, assemble, and install flashings that conform to the profiles indicated and other Contract Document requirements; meets specified performance criteria; and result in structurally sound non-corroding assemblies that accommodate, resist, distribute, or transfer in-service loads without incipient or catastrophic failure.
   2. Maintain visual design concept indicated, including sizes, profiles, and alignments. Deviation from visual design concept is non-conforming work and prohibited without prior written acceptance by the Architect.

B. Qualifications:
   1. Fabricator: Company or individuals must have at least 10 years' experience fabricating flashings installed on at least 100 previous projects similar to this project in size, material, design, and complexity
   2. Installer: Company or individuals must have at least 5 years' experience installing flashings for at least 30 previous projects similar to this project in size, material, design, and complexity.
   3. Supervisors: Individuals must have at least 7 years' experience installing flashings for at least 30 previous projects similar to this project in size, material, design, and complexity, including at least 2 years' supervisory experience directing and leading flashing installers.
   4. Engineer: Must be a licensed professional structural engineer registered to practice in California having at least 10 years' experience performing the kind of engineering services indicated for at least 20 previous projects similar to this project in size, material, design, and complexity.

C. Submittals: Submit product data, shop drawings, written descriptions of specified qualifications, and delegated design submittals.

D. Preinstallation Meeting:
   1. Hold a meeting after submittal approval and at least 10 business days before beginning installation.
   2. During the meeting, review the Contract Documents, submittals, project conditions, and installation sequence and methods, including special details and conditions that might affect installation
   3. Identify and discuss adverse or unfavorable conditions detrimental to protecting stored materials or to installation; or to the quality, durability, appearance, or performance of installed flashings. Resolve each condition.
   4. Finalize construction schedule.

5. Record significant discussions and distribute meeting minutes. Do not begin installation until disagreements are successfully resolved to the satisfaction of all parties.

E. Mockups: If an *ex-situ* exterior wall integrated mockup is required for this project, then integrate flashing into the mockup as part of the work of this specification section.

PART 2 - PRODUCTS

2.01 MATERIALS

A. Hot-Dip Galvanized and Galvannealed Steel Sheet: ASTM A 653, CS Type B (commercial steel), with equal coating weight on each surface, coating weight designation (mass designation) indicated below on both surfaces.
   1. Natural Finish (Galvanized): Provide material with at least a G90 coating weight, regular spangle, chemically treated (desired for humid-storage stain resistance; can still be painted; recommended for sheet that will be used unpainted), and oiled (intended as a corrosion inhibitor; sheet must be thoroughly cleaned to remove the oil prior to painting).
   2. Shop-Painted Finish (Galvanized): Provide material with at least a G90 coating weight, minimized spangle, chemically treated (desired for humid-storage stain resistance; can still be painted; recommended for sheet that will be used unpainted), and oiled (for enhanced formability; sheet must be thoroughly cleaned to remove the oil prior to painting).
   3. Field-Painted Finish (Galvannealed): Provide material with at least an A60 coating weight, not chemically treated, not oiled, and mill phosphatized (paint-grip finish; provides enhanced lubricating characteristics).

B. Stainless Steel Sheet:
   1. Exposed Locations: ASTM A 666 (annealed and tempered), Type 304L (for welded applications) or Type 304 (for all other applications), annealed, No. 2 (half hard) temper (hardness between Rockwell B-65 and B-70; can be bent 90 degrees across the direction of rolling around a radius equal to its thickness), passivated in conformance with ASTM A 967.
      a. Natural Finish: Furnish materials having a No. 2B (bright) finish.
      b. Painted Finish: Furnish materials having a No. 2D (matte) finish.
   2. Concealed Locations: ASTM A 240 (annealed) Type 304L (for welded applications) or Type 304 (for all other applications), annealed, No. 2 (half hard) temper (hardness between Rockwell B-65 and B-70; can be bent 90 degrees across the direction of rolling around a radius equal to its thickness), passivated in conformance with ASTM A 967.
   3. Natural Finish: Furnish materials having a No. 4 (bright) finish.

C. Aluminum Sheet: ASTM B 209, 5005-H32 (for anodic finishing) and 3003-H14 (for painted or unfinished sheet).

D. Pre-Painted Coated Steel Coil and Sheet: ASTM A 755.
   1. Sheet: Hot-dip galvanized and galvannealed steel sheet.
   2. Top Side Finish: 70-percent by weight liquid polyvinylidene fluoride (PVDF) coating system conforming to AAMA 2605 and consisting of a prime coat applied to a DFT of at least 0.2-mil and solid color coat applied to a DFT of at least 0.75-mil; or metallic color coat applied to a DFT of at least 0.75-mil and a clear top coat applied to a DFT of at least 0.50-mil.
   3. Reverse Side Finish: 0.25-mil DFT acrylic bottom side primer and polyester wash coat (backercoat).
   4. Painted Metallic Finishes: Panels, components, and accessories having a painted metallic finish must be finished such that the metallic finish directionality (grain) of all components runs

in the same direction when installed. Color variation caused by failurein conformane with this requirement is rejected as non-conforming work.

2.02 FABRICATION

A. Roofing and Roof Edge Flashings and Trim:
   1. Copings: Fabricate from at least 0.0359-inch BMT (MSG 20) hot-dip galvanized and galvannealed steel sheet.
   2. Gravel Stops: Fabricate from at least 0.0359-inch BMT (MSG 20) hot-dip galvanized and galvannealed steel sheet.
   3. Scuppers and Conductor Heads: Fabricate from at least 0.0359-inch BMT (MSG 20) hot-dip galvanized and galvannealed steel sheet.
   4. Gutters: Fabricate from at least 0.0359-inch BMT (MSG 20) hot-dip galvanized and galvannealed steel sheet.
   5. Downspouts: Fabricate from at least 0.0359-inch BMT (MSG 20) hot-dip galvanized and galvannealed steel sheet.

B. Other Sheet Metal Flashings and Trim:
   1. Interlocking Counterflashing: Provide same material and thickness as reglets.
   2. Through-Wall Flashings: Fabricate from at least 0.0250-inch thick (USSG 24) stainless steel sheet.
   3. Opening Flashings in Framed Construction: Fabricate from at least 0.0359-inch BMT (MSG 20) hot-dip galvanized and galvannealed steel sheet.
   4. Equipment Support Flashings: Fabricate from at least 0.0299-inch BMT (MSG 22) hot-dip galvanized and galvannealed steel sheet.
   5. Overhead-Piping Drip Pans: Fabricate from at least 0.0359-inch BMT (MSG 20) hot-dip galvanized and galvannealed steel sheet.
   6. Elevator Hoistway Guards: Fabricate from at least 0.0359-inch BMT (MSG 20) hot-dip galvanized and galvannealed steel sheet.
   7. Backpans: Fabricate from at least 0.0359-inch BMT (MSG 20) hot-dip galvanized and galvannealed steel sheet, with equal coating weight on each surface, coating designation G90, not chemically treated, not oiled. Stiffen back pans as necessary to prevent “oil canning” or excessive deflection under load.
   8. Flashings and Trim in Contact with Aluminum Components: Fabricate from at least 0.032-inch aluminum sheet.
   9. Flashings and Trim in Contact with Concrete, Gravel, or Soil and Elsewhere Indicated: Fabricate from at least 26-ga. stainless steel Type 316 sheet.
   10. Other Flashings and Trim: Unless otherwise noted, At least 24-ga. inch BMT (MSG 24) G90 Hot-dip galvanized and galvannealed steel sheet, or from at least 26-ga. stainless steel Type 316 stainless steel sheet.

C. Requisite Properties:
   1. Profiles, Edge Styles, and Attachments: Indicated on the Drawings.
   2. Joint Style: J2 (butt and backup plate).
   3. Fabrication: Provide standard profiles from the SMACNA quality standard publication, Chapter 1.

      a. Fabricate in sections at least 8-feet but not more than 10-feet long,

      b. Fabricate backup plates from the same material and thickness as copings.

      c. Miter corners, seal, mechanically fasten, and solder or weld watertight.

d. All corners and transitions must be shop or factory fabricated. Corner pieces shall extend minimum 12 inches beyond corner in both directions.

e. Only linear transitions may be field fabricated.

f. Finish: Filed-applied duplex coating.

2.03 ACCESSORIES

A. Splash Pans: Standard precast concrete units cast from at least 4,000 pounds per square inch concrete. Precast units must have rounded corners and smooth and dense surfaces free of honeycombs.

B. Soldering Materials:
1. HDG Sheet Metal Solder and Flux: 50-percent tin solder conforming to ASTM B 32 Grade Sn50 and used with a non-corrosive flux.
2. Stainless Steel Sheet Metal Solder and Flux: 60-percent tin solder conforming to ASTM B 32 Grade Sn60 and used with an acid flux.

C. Fasteners: Provide fasteners and accessory materials suitable to the type of use and conditions of installation and service indicated; and as required for producing secure attachment to supporting construction without staining or deterioration of either the base materials or fastened materials; or deterioration of the fastener itself when in contact with base materials or fastened materials.
1. Pop rivet attachment is prohibited.
2. Provide fasteners are made of the same material as the fastened material or have a suitable barrier protection coating.

a. Apply corrosion-inhibiting material (e.g., pastes, washers, compounds, etc.) under the heads of screws or bolts inserted into dissimilar metal, even if they are already treated or have a protective coating.

b. Washers, gaskets, and sleeves must be made of plastic or closed-cell polychloroprene (Neoprene).
3. Verify fasteners and accessories that are galvanically compatible with fastened materials under conditions of installation and service, as demonstrated by the fastener manufacturer based on testing and field experience. Do not use fasteners that are corrosive or otherwise incompatible with fastened materials.
4. Where fasteners are subject to loosening or turning out due to thermal and structural movements, wind loads, vibration, and other causes, provide self-locking devices that either maintain tension in the fastener assembly or remain locked even if tension in the assembly is lost. (e.g. washers, locknuts, and similar items)
5. Exposed fasteners are prohibited on faces exposed to view. Provide concealed fasteners and expansion provisions. Where unavoidable, provide flat head cap screws (type FHCS) with drive slots filled and finished flush and smooth with adjacent surfaces.

D. Underlayment:
1. Description: Self-adhering cross-laminated high-density polyethylene (HDPE) composite sheet/non-asphaltic butyl adhesive flashing membrane, with release liner on the adhesive side. Adhesive may not contain any asphalt.
2. Product: “Grace Ultra” manufactured by GCP Applied Technologies, or equal.
3. Requisite Properties:

a. Minimum Thickness: At least 30 mils.

b. Minimum Roll Width: 36 inches.

c. Maximum UV Exposure Limit: Not more than 100 days.

d. Maximum High Temperature Application: Up to 300 deg F.

E. Sealant:

1. Exposed Sealant: “756 SMS” neutral-curing silicone sealant manufactured by Dow Corning Corp., or equal conforming to ASTM C 920.
2. Concealed Sealant: Single-component, solvent-release plasticized polyisobutylene (butyl rubber) conforming to ASTM C 1311; black color.

F. Sealant Tape: Pressure-sensitive, 100 percent solids, gray polyisobutylene compound sealant tape with release-paper backing. Provide permanently elastic, non-sag, nontoxic, non-staining tape 1/2-inch wide and 1/8-inch thick.

G. Bituminous Coating: Cold-applied asphalt emulsion conforming to ASTM D 1187.

H. Other Accessories: Provide accessories and secondary items normally furnished or necessary for a complete installation; or supplied, required, recommended, or accepted by the manufacturer for actual in-service conditions applicable to the project.

PART 3 - EXECUTION

3.01 INSTALLATION REQUIREMENTS

A. General:

1. Ensure proper supervision practices are followed at the project site before the installer begins work and at all times during installation.
2. Verify that in-place construction conforms to the manufacturer’s requirements or recommendations and satisfies all other conditions that might affect the quality of installation or the durability, appearance, or performance of installed items
3. Scribe and cope items as necessary for an accurate fit. Perform required cutting, drilling, and fitting for flashing installation.
4. Set flashings true to line, to required levels and lines, plumb, square, and cut and fitted without warp or rack; sloped or level as required; with flush well-fitted joints; and in alignment with adjacent construction.
5. Shim as required with concealed shims.
6. Securely attach flashings in place to supporting construction.

B. Special Techniques:

1. Roof Drainage System: Install sheet metal roof drainage components as indicated to produce a complete roof drainage system conforming to the referenced standard.
2. Roof Flashing: Install sheet metal flashing and trimin conformane with performance requirements and the SMACNA quality standard publication requirements. Provide concealed fasteners where possible, set units true to line, and level. Install work with laps, joints, and seams that are permanently watertight and weather resistant.
3. Roof Edge Flashing: Anchor to resist uplift and outward forces in conformance with the recommendations of the SMACNA quality standard publication. Interlock bottom edge of roof edge flashing with continuous cleat anchored to substrate at staggered 3-inch centers.
4. Copings: Anchor to resist uplift and outward forces in conformance with the recommendations of the SMACNA quality standard publication requirements.

a. Interlock exterior bottom edge of coping with continuous cleat anchored to the supporting substrate at not more than 24-inches on center.

b. Anchor the interior leg of copings with washers and screw fasteners through slotted holes at not more than 24 inches on center.

5. Pipe and Post Counterflashing: Install counterflashing umbrella with close-fitting collar with top edge flared for elastomeric sealant, extending a minimum of 4 inches over base flashing. Install stainless-steel draw band and tighten.
6. Counterflashing: Insert counterflashing in reglets or receivers and fit tightly to base flashing. Extend counterflashing 4 inches over base flashing. Lap counterflashing joints a minimum of 4 inches and bed with sealant. Secure in a waterproof manner by means of snap-in installation and sealant.
7. Roof-Penetration Flashing: Seal with elastomeric sealant and clamp flashing to pipes that penetrate roof. All penetrations must receive umbrella flashings.
8. Wall Flashing: Install sheet metal wall flashing as indicated, and to intercept and exclude penetrating moisture in conformance with the referenced standard's recommendations.
9. Opening Flashing in Frame Construction: Install continuous head, sill, jamb, and similar flashings to extend beyond wall openings as indicated on the shop drawings.
10. Miscellaneous Flashing:

a. Equipment Support Flashing: Weld or seal flashing with elastomeric sealant to equipment support members.

b. Overhead-Piping Safety Pans: Suspend pans independent from structure above as indicated. Pipe and install drain lines to plumbing waste or drainage system as indicated on the plumbing drawings.

C. Installation Tolerances: Shim and align flashing within an installed tolerance of 1/4-inch in 20 feet on slope and location lines indicated, and within 1/8-inch offset of adjoining faces and of alignment of matching profiles.

D. Correction and Repair:
1. Correct deficiencies that do not conform to the Contract Documents.
2. Repair non-conforming, damaged, and defective work.

E. Protection:
1. Protect installed flashings in place from deterioration and damage until Substantial Completion.
2. Remove protection when it's no longer needed and before Substantial Completion.

END OF SECTION

©AWCWEST 18E22 All rights reserved.
RSTLNE. TAGDSC, ELMTB, CLSB2010

SECTION 07 65 26
SASM FLASHING

PART 1 - GENERAL

1.01 SUMMARY

A. Section Includes:
   1. Through-wall, opening, penetration, and transition SASM flashings that are not integral to WRB or AB installation.
   2. Roof and façade SASM underlayment.
   3. Installation materials.
   4. Surface preparation.
   5. Site tests and inspections.
   6. Supplementary components and accessories normally furnished or necessary for a complete installation, whether or not such items are indicated on the Drawings or included in the Specifications.

B. Related Requirements:
   1. Section 07 25 13 for self-adhering sheet flashings, installation materials, and accessories integral to sheet WRB installation.

1.02 SECTION REQUIREMENTS

A. Qualifications:
   1. Manufacturer: Company or individuals must have at least 10 years' experience manufacturing flashings installed on at least 200 previous projects similar to this project in size, material, design, and complexity.
   2. Installer: Company or individuals must have at least 5 years' experience installing flashings for at least 30 previous projects similar to this project in size, material, design, and complexity.
   3. Supervisors: Individuals must have at least 7 years' experience installing flashings for at least 30 previous projects similar to this project in size, material, design, and complexity, including at least 2 years' supervisory experience directing and leading flashing installers.
   4. Manufacturer's Representative: Individuals must have at least 5 years' technical field experience performing manufacturer's services for at least 50 previous projects similar to this project in size, material, design, and complexity.

B. Submittals: Submit product data, shop drawings, and written descriptions of specified qualifications.

C. Preinstallation Meeting:
   1. Hold a meeting after submittal approval and at least 10 business days before beginning installation.
   2. During the meeting, review the Contract Documents, submittals, project conditions, and installation sequence and methods, including special details and conditions that might affect installation
   3. Identify and discuss adverse or unfavorable conditions detrimental to protecting stored materials or to installation; or to the quality, durability, or performance of installed WRBs. Resolve each condition.
   4. Finalize construction schedule.

5. Record significant discussions and distribute meeting minutes. Do not begin installation until disagreements are successfully resolved to the satisfaction of all parties.

D. Mockups: If an *ex-situ* exterior wall integrated mockup is required for this project, then integrate flashings into the mockup as part of the work of this specification section.

PART 2 - PRODUCTS

2.01 MANUFACTURERS

A. Manufacturers: Provide products manufactured by one of the following, or equal.
1. Carlisle Coatings and Waterproofing Inc.
2. GCP Applied Technologies.
3. Henry Co.

2.02 THROUGH-WALL SASM FLASHING

A. Standard Through-Wall Flashing:
1. Description: Self-adhering cross-laminated high-density polyethylene (HDPE) composite sheet/rubberized asphalt adhesive flashing membrane, with release liner on the adhesive side, conforming to AAMA 711 requirements for self-adhered flashing materials.
2. Applications: Through-wall flashing for cavity wall applications.
3. Products: “Perm-A-Barrier Wall Flashing” manufactured by GCP Applied Technologies, or equal.
4. Requisite Properties:
    a. Minimum Thickness: At least 40 mils.
    b. Minimum Roll Width: At least 12 inches.
    c. Maximum UV Exposure Limit: Not more than 45 days.
    d. Color: Green with repeated logo imprint.
5. Performance Requirements:
    a. Maximum Water Vapor Transmission: Not more than 0.05-perm, when tested in conformance with ASTM E 96 method B.
    b. Minimum Pull Adhesion to Concrete: At least 60 pounds per foot, when tested in conformance with ASTM D 903 modified.
    c. Minimum Low Temperature Flexibility: Unaffected at minus 45 deg. F, when tested in conformance with ASTM D 1970.
    d. Minimum Elongation: At least 200 percent, when tested in conformance with ASTM D 412 die C modified.

B. Aluminum-Faced Detail Membrane:
1. Description: Aluminum-faced self-adhering cross-laminated high-density polyethylene (HDPE) composite sheet/rubberized asphalt adhesive, with release liner on the adhesive side, conforming to AAMA 711 requirements for self-adhered flashing materials.
2. Applications: Detail membrane for air and vapor barrier applications.

3. Restrictions: May not be used when aluminum facing might contact cementitious materials (e.g., Portland cement plaster) or dissimilar metals.
4. Products: “Perm-A-Barrier Aluminum Flashing” manufactured by GCP Applied Technologies, or equal.
5. Requisite Properties:
    a. Minimum Thickness: At least 40 mils.
    b. Minimum Roll Width: At least 9 inches.
    c. Maximum UV Exposure Limit: Not more than 270 days.
    d. Color: Natural finish aluminum.
6. Performance Requirements:
    a. Maximum Water Absorption: Not more than 0.1 percent, when tested in conformance with ASTM D 570.
    b. Minimum Puncture Resistance: At least 80 pounds, when tested in conformance with ASTM E 154.
    c. Minimum Elongation: At least 200 percent, when tested in conformance with ASTM D 412 die C modified.

2.03 OPENING AND PENETRATION SASM FLASHING

A. Standard SASM Flashing:
1. Description: Self-adhering cross-laminated high-density polyethylene (HDPE) composite sheet/rubberized asphalt adhesive flashing membrane, with release liner on the adhesive side, conforming to AAMA 711 requirements for self-adhered flashing materials.
2. Applications: Deck-to-wall intersections, inside and outside corners of sheathing, wall-to-wall tie-ins, foundation sill plates, sheathing panel seams, and other non-roof detail areas.
3. Restrictions: May not be used
    a. in hot desert areas in the southwestern United States;
    b. in contact with with flexible PVC or vinyl windows; and
    c. with certain metal windows having integral nail fins.
4. Products: “Vycor Plus” manufactured by GCP Applied Technologies, or equal.
5. Requisite Properties:
    a. Minimum Thickness: At least 25 mils.
    b. Minimum Roll Width: At least 9 inches.
    c. Maximum UV Exposure Limit: Not more than 21 days.
    d. Color: Black-gray.
6. Performance Requirements:
    a. Maximum Water Vapor Transmission: Not more than 0.05-perm, when tested in conformance with ASTM E 96 method B.

b. Minimum Pull Adhesion to Plywood: At least 3 pounds per inch, when tested in conformance with ASTM D 903 modified.

c. Minimum Low Temperature Flexibility: Unaffected at minus 20 deg. F. , when tested in conformance with ASTM D 1970.

d. Minimum Elongation: At least 250 percent, when tested in conformance with ASTM D 412 die C modified.

B. Aluminum-Faced SASM Flashing:

1. Description: Aluminum surfaced self-adhering cross-laminated high-density polyethylene (HDPE) composite sheet/rubberized asphalt adhesive, with release liner on the adhesive side, conforming to AAMA 711 requirements for self-adhered flashing materials.
2. Applications: Deck-to-wall intersections, inside and outside corners of sheathing, wall-to-wall tie-ins, foundation sill plates, sheathing panel seams, and other non-roof detail areas.
3. Restrictions: May not be used

   a. in hot desert areas in the southwestern United States;

   b. in contact with flexible PVC or vinyl windows;

   c. with certain metal windows having integral nail fins; and

   d. when aluminum facing may contact cementitious materials (e.g., Portland cement plaster) or dissimilar metals.
4. Products: “Vycor Aluminum Flashing” manufactured by GCP Applied Technologies, or equal.
5. Requisite Properties:

   a. Minimum Thickness: At least 25 mils.

   b. Minimum Roll Width: At least 6 inches.

   c. Maximum UV Exposure Limit: Not more than 350 days.

   d. Color: Natural finish aluminum.

C. Butyl SASM Flashing:

1. Description: Self-adhering cross-laminated polypropylene sheet/non-asphaltic butyl adhesive flashing membrane, with release liner on the adhesive side, conforming to AAMA 711 Level 3 requirements for elevated exposure self-adhered flashing materials. Adhesive may not contain any asphalt.
2. Applications: Used for flashing around window and door headers, sills, jambs, thresholds, and nailing flanges; and under exterior plaster (stucco) trims.
3. Products: “Vycor PRO” manufactured by GCP Applied Technologies, or equal.
4. Requisite Properties:

   a. Minimum Thickness: At least 14 mils.

   b. Minimum Roll Width: At least 9 inches.

   c. Maximum UV Exposure Limit: Not more than 100 days.

   d. Color: White with green paint.

2.04 SASM ROOF AND FAÇADE UNDERLAYMENT

A. High Temperature SASM Underlayment:
   1. Description: Self-adhering cross-laminated high-density polyethylene (HDPE) composite sheet/butyl adhesive flashing membrane, with release liner on the adhesive side.
   2. Applications: Roof detail areas, including under equipment flashings, as ice dam protection, at roof valleys and rake edges, and around chimneys and skylights.
   3. Restrictions: May not be used
      a. folded over roof edges, unless protected by a drip edge, gutter, or other flashing material;
      b. on chamfered edges of wood planks;
      c. installed directly over old roof coverings;
      d. installed directly under roof coverings that are especially sensitive to corrosion, including zinc, without providing proper ventilation; and
      e. installed under copper, Cor-Ten, or zinc metal roofing in high altitudes.
   4. Products: “Grace Ice & Water Shield HT” manufactured by GCP Applied Technologies, or equal.
   5. Requisite Properties:
      a. Minimum Thickness: At least 40 mils.
      b. Minimum Roll Width: 36 inches.
      c. Maximum UV Exposure Limit: Not more than 100 days.
      d. Maximum High Temperature Application: Up to 260 deg F.
      e. Color: Gray-black.
   6. Performance Requirements:
      a. Minimum Membrane Tensile Strength: At least 31 pound feet per inch, when tested in conformance with ASTM D 412, Die C modified.
      b. Minimum Membrane Elongation: At least 250 percent, when tested in conformance with ASTM D 412, Die C modified.
      c. Minimum Low Temperature Flexibility: Unaffected to at least -20 deg. F, when tested in conformance with ASTM D 1970.
      d. Minimum Adhesion to Plywood: At least 5.0 pounds per inch of width, when tested in conformance with ASTM D 903.
      e. Maximum Permeance: Not more than 0.05 perms, when tested in conformance with ASTM E 96 method B

B. Butyl SASM Underlayment:
   1. Description: Self-adhering cross-laminated high-density polyethylene (HDPE) composite sheet/non-asphaltic butyl adhesive flashing membrane, with release liner on the adhesive side. Adhesive may not contain any asphalt.
   2. Applications: Roof detail areas, including under equipment flashings, as ice dam protection, at roof valleys and rake edges, and around chimneys and skylights.

3. Restrictions: May not be used

    a. in contact with polysulfides;

    b. in contact with flexible PVC or vinyl windows; and

    c. with high concentrations of resin (pitch) that may be found in some wood plank decks.
4. Products: “Grace Ultra” manufactured by GCP Applied Technologies, or equal.
5. Requisite Properties:

    a. Minimum Thickness: At least 30 mils.

    b. Minimum Roll Width: 36 inches.

    c. Maximum UV Exposure Limit: Not more than 100 days.

    d. Maximum High Temperature Application: Up to 300 deg F.

    e. Color: Gray-black.
6. Performance Requirements:

    a. Minimum Membrane Tensile Strength: At least 250 pounds per square inch, when tested in conformance with ASTM D 412, Die C modified.

    b. Minimum Membrane Elongation: At least 250 percent, when tested in conformance with ASTM D 412, Die C modified.

    c. Minimum Low Temperature Flexibility: Unaffected to at least -2 deg. F , when tested in conformance with ASTM D 1970.

    d. Minimum Adhesion to Plywood: At least 3.0 pounds per inch of width, when tested in conformance with ASTM D 903.

    e. Maximum Permeance: Not more than 0.05-perm, when tested in conformance with ASTM E 96 method B

2.05 INSTALLATION MATERIALS

A. Liquid Flashing:
1. Description: Trowel grade, asphalt modified urethane.
2. Application: Used as repair material for defects on concrete surfaces; as fillet and reinforcement material at inside corners; as flashing material at outside corners and around drains, protrusions, curbs and parapets; and as sealing material at membrane terminations.
3. Product: “Bituthene Liquid Membrane” manufactured by GCP Applied Technologies, or equal.

B. Green Concrete Primer:
1. Description: Low-VOC solvent-based primer.
2. Applications: Used to prime green concrete cured less than 7 days; and to prime damp concrete, masonry, sheathing or wood surfaces to which SASMs are applied.
3. Product: “Bituthene Primer B2 LVC" manufactured by GCP Applied Technologies, or equal.

C. Sheathing Primer:
1. Description: Water-based primer.
2. Application: Used to prime fiber cement and GMF gypsum sheathing.

3. Product: “Perm-A-Barrier WB Primer” manufactured by GCP Applied Technologies, or equal.

2.06 ACCESSORIES

A. Sealant:
   1. Description: Silicone sealant conforming to ASTM C 920 requirements for Type S, Grade NS, Class 25.
   2. Product: “758” manufactured by Dow Corning Corp., or equal.
   3. Color: White.

B. Other Accessories: Provide accessories and secondary items normally furnished or necessary for a complete installation; or supplied, required, recommended, or accepted by the manufacturer for actual in-service conditions applicable to the project.

PART 3 - EXECUTION

3.01 INSTALLATION REQUIREMENTS

A. General:
   1. Ensure proper supervision practices are followed at the project site before the installer begins work and at all times during installation.
   2. Verify in-place construction, project conditions, and the work of other specification sections conform to the manufacturer’s instructions and other requirements and recommendations.
   3. Verify substrates are dry and free of curing compounds, sealers, hardeners, and deleterious and other substances that might interfere with flashing adhesion,
   4. Prepare substrates as required, recommended, or accepted by the manufacturer without limitation; and in a manner that does not result in any warranty or guarantee becoming void.
   5. Install flashings using materials and methods required, recommended, or accepted by the manufacturer, along with manufacturer-recommended accessories and techniques.
   6. Only install flashings under conditions that ensure they are free from blemishes and defects.
   7. Completed work must match approved samples and mockups, as accepted by the Architect.
   8. Installed flashings must be warrantable. Do not install, correct, or replace flashings in a manner that results in any warranty or guarantee becoming void.

B. Special Techniques:
   1. Accurately align flashing membranes and maintain uniform side and end laps at least 3 inches or as specifically depicted in the project details. Apply flashing membranes with side laps shingled in the direction of bulk water flow.
   2. Clean seam areas, overlap flashing membranes, and roll side and end laps in conformance with the flashing manufacturer's installation instructions to ensure a watertight seam installation.
   3. Press and form material tightly against the substrate.
      a. Pressure is essential to eliminate wrinkles and bubbles.
      b. Ensure complete and continuous adhesion by using a hard neoprene or stainless steel hand roller.
      c. Apply sealant or liquid membrane at flashing membrane leading edges.
   4. Install flashing around windows in the following order.

a. Install in conformance with details indicated on Drawings.

b. Install in conformance with the flashing membrane manufacturer, and the door and window manufacturers' installation instructions.

c. Install in conformance with ASTM E 2112.

5. Install flashing under copings over wall flashing, WRBs, and roof membranes.

a. Provide aluminum-faced flashing separation at incompatible materials.

b. Lap joints at least 3 inches.

c. Hand-roll seams for complete adherence to substrate.

C. Site Tests and Inspections:

1. General: Include site tests and inspections as part of the work of this specification section. The Owner's testing and inspection agency performs tests and inspections.
2. Adhesion Testing: Before beginning work in each area, conduct adhesion tests with manufacturer's representative present at start of installation over each new substrate.

D. Correction and Repair:

1. Correct deficiencies that do not conform to the Contract Documents.
2. Repair non-conforming, damaged and defective work.

E. Protection:

1. Protect installed equipment in place from deterioration, and damage until covering.
2. Remove protection when it's no longer needed and before covering.

END OF SECTION

©AWCWEST 18E22 All rights reserved.
RSTLNE, TAGDSC, ELMTB, CLSB2010

SECTION 07 92 00
JOINT SEALANTS

PART 1 - GENERAL

1.01 SUMMARY

A. Section Includes:
   1. Traffic sealants.
   2. Exterior façade sealants.
   3. Interior joint sealants.
   4. Joint sealant backings.
   5. Surface preparation.
   6. Site tests and inspections.
   7. Supplementary components and accessories normally furnished or necessary for a complete installation, whether or not such items are indicated on the Drawings or included in the Specifications.

B. Related Requirements:
   1. Section 08 81 00 for structural sealants.
   2. Section 09 81 33 for acoustical sealants.

1.02 SECTION REQUIREMENTS

A. Qualifications:
   1. Installer: Company or individuals must have at least 5 years' experience installing joint sealants for at least 30 previous projects similar to this project in size, material, design, and complexity.
   2. Supervisors: Individuals must have at least 7 years' experience installing joint sealants for at least 30 previous projects similar to this project in size, material, design, and complexity, including at least 2 years' supervisory experience directing and leading joint sealant installers.

B. Submittals: Submit product data, samples, and written descriptions of specified qualifications.

PART 2 - PRODUCTS

2.01 MANUFACTURERS

A. Acrylic Latex Sealant Manufacturers:
   1. LATICRETE International, Inc.
   2. Pecora Corp.
   3. Tremco, Inc.

B. Polyurethane Sealant Manufacturers: Provide products manufactured by one of the following, or equal.
   1. BASF Building Systems.
   2. Pecora Corp.
   3. Sika Corp.

C. Silicone Sealant Manufacturers: Provide products manufactured by one of the following, or equal. Private label and third-party-manufactured sealants are prohibited.
   1. Dow Corning Corp.
   2. Momentive Performance Materials, Inc.

2.02 TRAFFIC JOINT SEALANTS

A. High Modulus Polyurethane Traffic Sealant:
   1. Application: Used to weather seal interior and exterior walkways, plazas, decks, parking garages, and similar horizontal installation joints subject to pedestrian or vehicular traffic.
   2. Description: Polyurethane sealant conforming to ASTM C 920 requirements for Type S, Grade P, Class 25, Use T, M or O sealant, as applicable.
   3. Product: Provide one of the following, or equal.
      a. “Sonneborn Sonolastic SL 1” manufactured by BASF Building Systems.
      b. “Urexpan NR-201” manufactured by Pecora Corp.
      c. “Sikaflex-1C SL” manufactured by Sika Corp.
   4. Colors: Selected by the Architect from the manufacturer’s standard colors.

2.03 EXTERIOR FACADE SEALANTS

A. Ultra-Low Modulus Silicone Sealant:
   1. Description: Neutral-curing silicone sealant conforming to ASTM C 920 requirements for Type S, Grade NS, Class 100/50, Use NT, A or O sealant, as applicable.
   2. Application: Used for sealing expansion and control joints, precast concrete panel joints, EIFS joints, curtainwall joints, mullion joints, stone pavers, and other exterior building joints subject to extreme or dynamic movement.
   3. Products: Provide one of the following, or equal.
      a. “790” manufactured by Dow Corning Corp.
      b. “GE SCS 2700 SilPruf LM” manufactured by Momentive Performance Materials, Inc.
   4. Colors: Selected by the Architect from the manufacturer’s standard colors.

B. Low Modulus Silicone Sealant:
   1. Description: Neutral-curing silicone sealant conforming to ASTM C 920 requirements for Type S, Grade NS, Class 50, Use NT, M, G, A or O sealant, as applicable.
   2. Application: Used for weatherproofing building facade materials, including glass, aluminum, steel, painted metal, EIFS, granite and other stone, concrete, brick and plastics.
   3. Products: Provide one of the following, or equal.
      a. “795” manufactured by Dow Corning Corp.
      b. “GE SCS 2000 SilPruf LM” manufactured by Momentive Performance Materials, Inc.
   4. Colors: Selected by the Architect from the manufacturer’s standard colors.

C. Butyl Sealant:
   1. Description: Single-component, solvent-release plasticized polyisobutylene (butyl rubber) conforming to ASTM C 1311.
   2. Application: Applied to weather seal joints between sheet metal flashings and substrates.

3. Color: Black.

2.04 SPECIALTY JOINT SEALANTS

A. Low Modulus Porous Surface Sealant:
   1. Description: Neutral-curing silicone sealant conforming to ASTM C 920 for Type S, Grade NS, Class 50, Use NT, M, G, A or O sealant, as applicable.
   2. Application: Used for weatherproofing exterior building joints in sensitive porous stone requiring reduced substrate staining; and with metal panel substrates requiring reduced residue rundown.
   3. Products: Provide one of the following, or equal.
      a. “756 SMS” manufactured by Dow Corning Corp.
      b. “GE SCS 9000 SilPruf NB” manufactured by Momentive Performance Materials, Inc.
   4. Colors: Selected by the Architect from the manufacturer’s standard colors.

2.05 INTERIOR JOINT SEALANTS

A. Single-Component Damp Location Sealant:
   1. Description: Medium or high modulus mildew-resistant silicone sealant conforming to ASTM C 920 requirements for Type S, Grade NS, Class 25, Use NT, A or O sealant, as applicable.
   2. Products: Provide one of the following, or equal.
      a. “786” manufactured by Dow Corning Corp.
      b. “Sanitary SCS 1700” manufactured by Momentive Performance Materials, Inc.
   3. Colors: White or clear, as selected by the Architect.

B. General Purpose Interior Sealant:
   1. Description: Siliconized acrylic-latex sealant conforming to ASTM C 834 requirements for Type OP, Grade NF classification, as required.
   2. Products: Provide one of the following, or equal.
      a. “Sonneborn Sonolac” manufactured by BASF Building Systems.
      b. “AC-20+Silicone” manufactured by Pecora Corp.
      c. “Tremflex 834” manufactured by Tremco, Inc.
   3. Colors: Selected by the Architect from the manufacturer’s standard colors.

2.06 JOINT SEALANT BACKINGS

A. Closed Cell Foam Joint Backing:
   1. Description: Extruded polyethylene foam cylindrical sealant backings conforming to ASTM C 1330, Type C.
   2. Application: Provide closed-cell backer rod at all exterior applications unless otherwise indicated on the Drawings.
   3. Products: Provide one of the following, or equal.
      a. “Mile High Foam” manufactured by Backer Rod Mfg. Inc.

b. “HBR” or “Green Rod” manufactured by Nomaco, Inc.

c. “NuFlex 870” manufactured by TVM Building Products.

4. Performance Requirements:

a. Maximum Water Absorption: Not more than 0.10 grams per cubic centiliter when tested in conformance with conformance with ASTM C 1016, Procedure B.

b. Minimum Density: At least 24 per cubic meter when tested in conformance with conformance with ASTM D 1622.

c. Maximum Outgassing: Less than 1 bubble when tested in conformance with conformance with ASTM D 1253.

d. Minimum Compression Recovery: At least 90 percent, when tested in conformance with conformance with ASTM D 5249.

e. Minimum Compression Deflection: At least 20.5 percent, when tested in conformance with conformance with ASTM D 5249.

f. Minimum Tensile Strength: At least 200 kPa, when tested in conformance with conformance with ASTM D 1623.

B. Open Cell Foam Joint Backing:

1. Restrictions: Permitted only for interior use, and as the second (interior) line of a double-line sealant application.

C. Bi-Cellular (Dual-Cell) Foam Joint Backings:

1. Description: Extruded polyethylene foam cylindrical sealant backings conforming to ASTM C 1330, Type B.
2. Restrictions: Permitted only for interior use. Only bi-cellular (dual-cell) foam may be used as a backing for single-component (air-cure) materials.
3. Products: “Sof Rod” or “Dual Rod” manufactured by Nomaco, Inc., or equal.
4. Performance Requirements:

a. Maximum Water Absorption: Not more than 0.10 grams per cubic centiliter when tested in conformance with conformance with ASTM C 1016, Procedure B.

b. Density: At least 24 kilograms per cubic meter when tested in conformance with conformance with ASTM D 1622.

c. Maximum Outgassing: Less than 1 bubble when tested in conformance with conformance with ASTM D 1253.

d. Minimum Compression Recovery: At least 90 percent, when tested in conformance with conformance with ASTM D 5249.

e. Minimum Compression Deflection: At least 20.5 percent, when tested in conformance with conformance with ASTM D 5249.

f. Minimum Tensile Strength: At least 200 kPa, when tested in conformance with conformance with ASTM D 1623.

D. Bond-Breaker Tape: Polyethylene tape or other plastic tape recommended by sealant manufacturer for preventing sealant from adhering to rigid, inflexible joint-filler materials or joint surfaces at back of joint. Provide self-adhesive tape where applicable.

E. Prefabricated Backer Seal: “BackerSeal” manufactured by Emseal Joint Systems, Ltd., or equal.

2.07 TAPE SEALANTS

A. Foam Tape:
   1. Description: Closed-cell, compressible PVC foam with pressure-sensitive adhesive.
   2. Product: “NORSEAL” foam tape manufactured by Saint-Gobain Performance Plastics, or equal.

B. Pre-Formed Silicone Sheet:
   1. Applications: Used at barrier transitions to rough openings.
   2. Product: “Dow Corning 123 Silicone Seal” manufactured by Dow Corning Corp., or equal.
   3. Colors: Selected by the Architect from the manufacturer’s standard colors.

2.08 ACCESSORIES

A. Primer and Surface Cleaners:
   1. Application: Applied to enhance and strengthen sealant adhesion to porous and nonporous substrates; and help ensure proper joint preparation
   2. Porous and Cementitious Surfaces: “1200 OS Primer” manufactured by Dow Corning Corp., or equal.
   3. Other Surfaces: “Construction Primer P” manufactured by Dow Corning Corp., or equal.

B. Masking Tape: Provide paper masking tape manufactured by 3M, or equal, unless another kind is supplied, required, recommended, or accepted by the manufacturer for actual in-service conditions applicable to the project

C. Accessories: Provide accessories and secondary items normally furnished or necessary for a complete installation; or supplied, required, recommended, or accepted by the manufacturer for actual in-service conditions applicable to the project.

PART 3 - EXECUTION

3.01 INSTALLATION REQUIREMENTS

A. General:
   1. Ensure proper supervision practices are followed at the project site before the installer begins work and at all times during installation.
   2. Verify in-place construction, project conditions, and the work of other specification sections conform to the manufacturer’s instructions and other requirements and recommendations.
   3. Protect work areas from dust and other airborne contaminants during surface preparation and joint sealant installation. Protect adjacent surfaces against soiling and damage.
   4. Prepare substrates as required, recommended, or accepted by the manufacturer without limitation; and in a manner that does not result in any warranty or guarantee becoming void.
   5. Install joint sealants in conformance with ASTM C 1193 using materials and methods required, recommended, or accepted by the manufacturer, along with manufacturer-recommended accessories and techniques.
   6. Only install joint sealants under conditions that ensure finishes are free from blemishes and defects.

7. Provide smooth surfaces of uniform finish, color, appearance, and coverage. Joint sealant surfaces with cloudiness, spotting, holidays, runs, or other imperfections are prohibited and are rejected as non-conforming work. Produce sharp and even lines and color breaks.
8. Completed work must match approved samples and mockups, as accepted by the Architect.
9. Installed joint sealants must be warrantable. Do not install, correct, or replace joint sealants in a manner that results in any warranty or guarantee becoming void.

B. Special Techniques:
1. Install sealant backings to support sealants during application and at position required to produce cross-sectional shapes and depths of installed sealants relative to joint widths that allow optimum sealant movement capability.
2. Install bond-breaker tape behind sealants where sealant backings are not used between sealants and backs of joints.
3. Size materials to achieve required width/depth ratio.
4. Install sealants using proven techniques that comply with the following and at the same time backings are installed:
5. Promptly after sealant application, and before skinning or curing begins, tool sealants to form smooth, uniform beads of configuration indicated; to eliminate air pockets; and to ensure contact and adhesion of sealant with sides of joint.

C. Site Tests and Inspections:
1. General: Include site tests and inspections as part of the work of this specification section. The Owner's testing and inspection agency performs tests and inspections.
2. Non-Destructive Testing:

    a. The center of sealant beads are depressed with a probing tool to depth of 50 percent of the bead width.

    b. If sealant fails, then the failure is recorded along with whether the failure was an adhesive or cohesive failure, and the maximum surface depression as a percentage of joint width.

    c. Tests are performed every 12 inches for first 10 linear feet of each joint; if test failure is not observed, then tests are performed every 24 inches thereafter.
3. Destructive Testing:

    a. A 6-inch-long tail of sealant is cut loose from substrate.

    b. The tail is marked one inch from the beginning of the adhesive bond away from the cut tail.

    c. The tail is grasped one inch from the beginning of the adhesive bond and pulled until it extends to 2 times the published movement capability of the sealant. If sealant does not fail, it is then pulled to failure.

    d. Elongation at the point of failure is recorded along with whether the failure was an adhesive or cohesive failure.

    e. Sealant is then observed during the complete filling of the joint for the presence of voids, for joint configuration, and for conformance with specified requirements. Observations and sealant dimensions are recorded.

    f. 10 tests are performed for the first 1,000 linear feet of joint for each type of sealant and substrate; if failure at two times the movement capability is not observed, then one test is performed for either every 1,000 linear feet thereafter or at a rate of one test per floor per building elevation, whichever is more frequent.

4. After testing is complete, promptly replace failed sealants in test areas.

    a. Neatly cut out and remove failed sealant, prepare and prime surfaces, and install new sealant.

    b. Ensure that original sealant surfaces are clean and that new sealant contacts original sealant.

D. Correction and Repair:
   1. Correct deficiencies that do not conform to the Contract Documents.
   2. Repair non-conforming, damaged and defective work.
   3. Replace soiled joint sealants that cannot be cleaned to the same condition as new.

E. Protection: Protect installed joint sealants in place from soiling, deterioration, and damage until Substantial Completion.

END OF SECTION

©AWCWEST 18E22 All rights reserved.
RSTLNE, TAGDSC, ELMTB, CLSB2010, CLSB3040, ELMTC, CLSC1010

DIVISION 08

OPENINGS

SECTION 08 12 13
STANDARD HOLLOW METAL FRAMES

PART 1 - GENERAL

1.01 SUMMARY

A. Section Includes:
   1. Standard hollow metal door frames.
   2. Supplementary components and accessories normally furnished or necessary for a complete installation, whether or not such items are indicated on the Drawings or included in the Specifications.

B. Related Requirements:
   1. Section 08 71 00 for door hardware.

1.02 SECTION REQUIREMENTS

A. Qualifications:
   1. Manufacturer: Company or individuals must have at least 10 years' experience manufacturing door frames installed on at least 200 previous projects similar to this project in size, material, design, and complexity. Manufacturer must be a current member of SDI.
   2. Installer: Company or individuals must have at least 5 years' experience installing door frames for at least 30 previous projects similar to this project in size, material, design, and complexity. Installer must be a current member of SDI.
   3. Supervisors: Individuals must have at least 7 years' experience installing door frames for at least 30 previous projects similar to this project in size, material, design, and complexity, including at least 2 years' supervisory experience directing and leading door frame installers.

B. Submittals: Submit product data, door schedule, shop drawings, and written descriptions of specified qualifications.

C. Preinstallation Meeting:
   1. Hold a meeting after submittal approval and at least 10 business days before beginning installation.
   2. During the meeting, review the Contract Documents, submittals, project conditions, and installation sequence and methods, including special details and conditions that might affect installation
   3. Identify and discuss adverse or unfavorable conditions detrimental to protecting stored materials or to installation; or to the quality, durability, appearance, or performance of installed door frames. Resolve each condition.
   4. Finalize construction schedule.
   5. Record significant discussions and distribute meeting minutes. Do not begin installation until disagreements are successfully resolved to the satisfaction of all parties.

PART 2 - PRODUCTS

2.01 MANUFACTURERS

A. Manufacturers: Provide products manufactured by one of the following, or equal.

1. Allegion PLC.
2. ASSA ABLOY.
3. Door Components, Inc.
4. MPI Custom Steel Doors and Frames.
5. Republic Doors and Frames.

2.02 STANDARD HOLLOW METAL FRAMES

A. Description: 3-sided (open), welded, masonry (universal) and flush drywall standard HM frames conforming to the requirements of Steel Door Institute publication SDI-100, "*Recommended Specifications for Standard Steel Doors and Frames"*.

B. Products: Provide the following "Steelcraft" brand frames manufactured by Allegion, or equal.
   1. Single Egress Door HM Frames: "F-Series" frames.
   2. Double Egress Door HM Frames: "FE-Series" frames.
   3. Cross-Corridor Door HM Frames: "DE-Series" frames.
   4. Stainless Steel HM Frames: "FS-Series" frames.

C. Requisite Properties:
   1. HM Frame Materials:
      a. Frames with an Uncoated Finish (Bare or Natural Finish): Fabricate from zinc coated (HDG) steel sheet or from stainless steel sheet, as indicated.
      b. Exterior Frames with a Painted Finish and Interior Frames Installed in Wet or High Humidity Locations (including shower rooms and toilet rooms): May be fabricated from either zinc-iron alloy coated (galvannealed) steel sheet or stainless steel sheet.
      c. Interior Frames Installed Elsewhere: Fabricate from uncoated CRS sheet.
      d. Sidelight and Transom Frames: Fabricate from the same material, thickness, and finish as the adjacent door frame.
   2. HM Frame Material Thickness:
      a. HM Frames for Level 3 and Physical Performance Level B (Extra Heavy Duty) Doors: Fabricate from at least 0.0598-inch BMT (MSG 16) uncoated steel and zinc-coated steel BMT; or from at least 0.0625-inch BMT (USSG 16) stainless steel sheet.
      b. HM Frames for Level 4 and Physical Performance Level A (Maximum Duty) Doors: Fabricate from at least 0.0747-inch BMT (MSG 14) uncoated and zinc-coated steel sheet, or at least 0.0781-inch (USSG 14) stainless steel sheet.
      c. Other HM Frames: Fabricate from at least 0.0598-inch BMT (MSG 16) uncoated steel and zinc-coated steel BMT; or from at least 0.0625-inch BMT (USSG 16) stainless steel sheet.
   3. HM Frame Profiles:
      a. Types: Indicated on the Drawings.
      b. Throat Openings:
         1) Butted Frames: Equal to the wall or partition type thickness minus twice the frame return dimension, unless otherwise indicated.

2) Wrap-Around Frames: Equal to the wall or partition thickness, unless otherwise indicated.

c. Frame Depth:

1) Butted Frames: Equal to the wall or partition thickness.

2) Wrap-Around Frames: Equal to the throat opening plus twice the frame return dimension.

d. Frame Return Dimension: 1/2-inch.

e. Backbend Dimension (Second, Double, or Drywall Return Dimension): At least 3/8-inch.

f. Backbend Type: Indicated on the Drawings.

g. Face Dimension: Provide 4-inch face dimension at heads in CMU construction where required to maintain a masonry module; provide 2-inch face dimension at jambs. Provide 2-inch face dimension elsewhere, unless otherwise indicated.

h. Stop Dimension: 5/8-inch.

i. Rabbet Depth Dimension: Equal to 3/16-inch greater than the door thickness.

j. Opposite Door Rabbet Depth Dimension: 1-9/16 inches .

k. Soffit Dimension: Equal to the frame depth minus the sum of the rabbet dimensions.

4. HM Frame Corners:

a. Welded HM Door Frames: Provide square-cut mitered or coped and mitered, set-up arc welded (SUA) and ground smooth, full profile welded frames (fully welded or continuously welded frames) for installation of frames as a complete unit. All corners must be watertight.

b. HM Frame Glazing Beads: Provide butted corners.

5. HM Frame Hardware Preparations and Reinforcement: Provide HM frame hardware reinforcing and preparations in conformance with ANSI/SDI publications A250.6, "*Recommended Practice for Hardware Reinforcing on Standard Steel Doors and Frames"* and A250.8, "*Recommended Specifications for Standard Steel Doors and Frames"*.

2.03 ACCESSORIES

A. Head Reinforcement: For opening widths greater than 48 inches wide, provide channel or angle stiffeners fabricated from at least 0.0747-inch BMT (MSG 14) zinc coated (HDG) steel sheet or at least 0.0781-inch BMT (USSG 14) stainless steel sheet, as applicable.

B. Anchors:

1. Masonry Anchors: Provide either 3/16-inch minimum diameter (SWG 7) galvanized carbon steel masonry wire anchors or at least 0.0598-inch BMT (MSG 16) zinc coated (HDG) steel sheet masonry tee anchors, as applicable.
2. Existing Opening Anchors: Provide at least 16-gage welded pipe sleeve anchors with 0.0598-inch BMT (MSG 16) zinc coated (HDG) steel sheet straps designed specifically to add support for bolting frames into rough openings of an existing walls.
3. Wood Stud Anchors: Provide either at least 0.0598-inch BMT (MSG 16) zinc coated (HDG) steel sheet anchors designed specifically for attachment to the wood studs of a rough opening.

4. Metal Stud Anchors: Provide either at least 0.0598-inch BMT (MSG 16) zinc coated (HDG) steel sheet anchors designed specifically for attachment to the webbing of the closed steel studs built around the frame.
5. Universal Stud Wall Anchors: Provide either at least 0.0598-inch BMT (MSG 16) zinc coated (HDG) steel sheet universal lock-in jamb anchors designed specifically for use in either wood or steel stud wall applications, as applicable.
6. Base Anchors: Provide either at least 0.0598-inch (MSG 16) BMT zinc coated (HDG) steel sheet or at least 0.0625-inch BMT (USSG 16) stainless steel sheet base anchors, as applicable. Provide adjustable base anchors that allow for installation adjustment when the floor is not level.

C. Electrical Device Requirements: Make provisions for installation of electrified hardware and door electrical devices, and arrange so that wiring is readily installed, removed, and replaced.
1. Provide cutouts and reinforcement required for installation of devices.
2. Provide metal conduits or raceways to accommodate wiring between devices. (e.g., from electric hinge to other electric door hardware)

D. Glazing Stops:
1. Fire-Rated Conditions: Provide 3/4-inch square channel glazing beads.
2. Elsewhere: Provide 5/8-inch square channel glazing beads.
3. Material Thickness: Fabricate from at least 0.0478-inch BMT (MSG 18) uncoated and zinc-coated steel sheet.

E. Silencers: Provide loose, 1/8-inch thick by 1/2-inch wide pressure-sensitive-adhesive-backed polychloroprene (Neoprene) or ethylene propylene diene monomer (EPDM) rubber silencers for field installation. Furnish at least 3 for each strike jamb and at least 2 for double door head. Do not provide silencers where they may interfere with other seals, including smoke & draft seals.

F. Filler: Provide material conforming to the requirements of ANSI/SDI publication A250.8, "*Recommended Specifications for Standard Steel Doors and Frames"*. Use UL-listed materials in frames scheduled as having a fire-resistance rating.

G. Other Accessories: Provide accessories and secondary items normally furnished or necessary for a complete installation; or supplied, required, recommended, or accepted by the manufacturer for actual in-service conditions applicable to the project.

2.04 MATERIALS

A. Uncoated Carbon Steel Sheet:
1. Frame Material: Finished CRS coil, sheet, and strip conforming to ASTM A 1008, CS Type B (commercial steel), exposed, temper rolled, regular matte surface finish (40 to 59 AA), and oiled (sheet must be thoroughly cleaned to remove the oil prior to painting).
2. Hardware Reinforcements: HRS coil, sheet, and strip conforming to ASTM A 1011, CS Type B (commercial steel), as-rolled surface finish, with cut edges.

B. Zinc-Iron Alloy Coated (Galvannealed) Steel Sheet: ASTM A 653, CS Type B (commercial steel), with equal coating weight on each surface.
1. Coating Weight (Mass) Designation: Provide at least a A60 (galvannealed) minimum coating weight (mass) designation.
2. Surface Finish: Non-spangled matte finish.
3. Surface Treatment: Provide mill phosphate surface treatment (paint-grip finish - provides enhanced lubricating characteristics).

C. Zinc Coated (HDG) Steel Sheet: ASTM A 653, CS Type B (commercial steel), with equal coating weight on each surface.
   1. Coating Weight (Mass) Designation: Provide at least a G90 (galvanized) minimum coating weight (mass) designation.
   2. Surface Finish: Provide regular spangle surface finish.
   3. Surface Treatment:
      a. Exterior Frames: Provide oil over chemical surface treatment (chemical treatment desired for humid-storage stain resistance and oil treatment needed for enhanced formability).
      b. Interior Frames: Provide oiled surface treatment (needed for enhanced formability).

PART 3 - EXECUTION

3.01 INSTALLATION REQUIREMENTS

A. General:
   1. Ensure proper supervision practices are followed at the project site before the installer begins work and at all times during installation.
   2. Verify in-place supporting and adjacent construction conforms to the manufacturer's requirements or recommendations, and satisfies all other conditions that might affect the quality of installation or the durability, appearance, or performance of installed door frames and adjacent items.
   3. Install door frames in conformance with the quality standards publications using using materials and methods required, recommended, or accepted by the manufacturer, along with manufacturer-recommended accessories and techniques.
   4. Set items true to line, to required levels and lines, and plumb, level, and square, without warp or rack, with flush well-fitted joints, and in alignment with adjacent construction.
   5. Perform drilling and fitting as required or necessary for an accurate fit and complete installation.
   6. Securely attach door frames in place to supporting construction.
   7. Installed door frames must be warrantable. Do not install, correct, or replace door frames in a manner that results in any warranty or guarantee becoming void.

B. Special Techniques:
   1. Frames: Set frames accurately in position, plumbed, aligned, and braced securely until permanent anchors are set. After wall construction is complete, remove temporary braces, leaving surfaces smooth and undamaged.
      a. Install frames with removable glazing stops located on secure side of opening.
      b. Check plumbness, squareness, and twist of frames as walls are constructed. Shim as necessary to comply with installation tolerances.
      c. Install door silencers in frames before grouting.
      d. Provide setting spreaders, supplied by the installer, and leave intact until frames are set square and plumb within specified tolerances, and all anchors are securely attached and grouted where required.
      e. Remove frame spreader bars only after frames re properly set and secured. Restore exposed finish by grinding, filling, and dressing, as required to make repaired area smooth, flush, and invisible on exposed faces.

2. Floor Anchors: Provide floor anchors for each jamb and mullion that extends to floor, and secure with post-installed expansion anchors.
3. Masonry Walls: Coordinate installation of frames to allow for solidly filling space between frames and masonry with grout.
4. Concrete Walls: Solidly fill space between frames and concrete with grout. Take precautions, including bracing frames, to ensure that frames are not deformed or damaged by grout forces.
5. Ceiling Struts: Except where anchored to masonry or to other structural support at each jamb, extend struts vertically from top of frame at each jamb to overhead structural supports or substrates above frame.

    a. Bend top of struts to provide flush contact for securing to supporting construction.

    b. Provide adjustable wedged or bolted anchorage to frame jamb members.
6. Glazing: Comply with installation requirements in Section 08 81 00 and with the manufacturer's instructions. Secure stops with countersunk flat- or oval-head machine screws spaced uniformly not more than 9 inches O.C. and not more than 2 inches on center from each corner.

C. Installation Tolerances: Install frames within the following tolerance variations.
1. Maximum Out of Square: Not more than 1/16-inch, measured at rabbet on 90 degrees from jamb perpendicular to frame head.
2. Maximum Out of Alignment: Not more than 1/16-inch, measured at jambs on a horizontal line parallel to plane of wall.
3. Maximum Twist: Not more than 1/16-inch, measured at at opposite face corners of jambs on parallel lines, and perpendicular to plane of wall.
4. Maximum Out of Plumb: Not more than 1/16-inch, measured on floor at jambs.

D. Correction and Repair:
1. Correct deficiencies that do not conform to the Contract Documents.
2. Repair non-conforming, damaged and defective work.
3. Replace soiled items that cannot be cleaned to the same condition as new.

E. Protection:
1. Protect installed door frames in place from soiling, deterioration, and damage until Substantial Completion.
2. Remove protection when it’s no longer needed and before Substantial Completion.

END OF SECTION

©AWCWEST 18E22 All rights reserved.
RSTLNE, TAGDSC, ELMTB, CLSB2050, ELMTC, CLSC1030

SECTION 08 13 13
STANDARD HOLLOW METAL DOORS

PART 1 - GENERAL

1.1 SUMMARY

A. Section Includes:
   1. Standard hollow metal doors.
   2. Supplementary components and accessories normally furnished or necessary for a complete installation, whether or not such items are indicated on the Drawings or included in the Specifications.

B. Related Requirements:
   1. Section 08 71 00 for door hardware.

1.2 SECTION REQUIREMENTS

A. Qualifications:
   1. Manufacturer: Company or individuals must have at least 10 years' experience manufacturing doors installed on at least 200 previous projects similar to this project in size, material, design, and complexity. Manufacturer must be a current member of SDI.
   2. Installer: Company or individuals must have at least 5 years' experience installing doors for at least 30 previous projects similar to this project in size, material, design, and complexity. Installer must be a current member of SDI.
   3. Supervisors: Individuals must have at least 7 years' experience installing doors for at least 30 previous projects similar to this project in size, material, design, and complexity, including at least 2 years' supervisory experience directing and leading door installers.

B. Submittals: Submit product data, door schedule, shop drawings, and written descriptions of specified qualifications.

C. Preinstallation Meeting:
   1. Hold a meeting after submittal approval and at least 10 business days before beginning installation.
   2. During the meeting, review the Contract Documents, submittals, project conditions, and installation sequence and methods, including special details and conditions that might affect installation
   3. Identify and discuss adverse or unfavorable conditions detrimental to protecting stored materials or to installation; or to the quality, durability, appearance, or performance of installed doors. Resolve each condition.
   4. Finalize construction schedule.
   5. Record significant discussions and distribute meeting minutes. Do not begin installation until disagreements are successfully resolved to the satisfaction of all parties.

PART 2 - PRODUCTS

2.1 MANUFACTURERS

A. Manufacturers: Provide products manufactured by one of the following, or equal.
   1. Allegion PLC.
   2. ASSA ABLOY.
   3. Door Components, Inc.
   4. MPI Custom Steel Doors and Frames.
   5. Republic Doors and Frames.

2.2 STANDARD HOLLOW METAL DOORS

A. Description: Extra heavy- and maximum-duty, commercial full flush and seamless steel-stiffened doors.

B. Products: Provide the following “Steelcraft” brand doors manufactured by Allegion, or equal.
   1. Interior Doors: “BW-16” doors.
   2. Exterior Doors: “BW-14” doors.
   3. Temperature Rise Rated Doors: “T-14” doors.

C. Requisite Properties:
   1. Construction: SDI 108 Level 3 (extra heavy-duty) or Level 4 (maximum-duty), Model 2 (seamless with welded edge construction).
   2. Type: SDI 106, Type F (seamless).
   3. Thickness: 1-3/4 inches.
   4. Face Sheets:
      a. Exterior Doors: Fabricate from at least 0.0747-inch BMT (MSG 14) galvannealed steel sheet.
      b. Interior Doors at Wet Locations, such as Shower Rooms and Toilet Rooms: Fabricate from at least 0.0747-inch BMT (MSG 14) galvannealed steel sheet.
      c. Interior Doors Located Elsewhere: Fabricate from at least 0.0598-inch BMT (MSG 16) CRS.
   5. Core Construction:
      a. Exterior Insulated Doors: Maximum thermal transmittance (U-factor) value of not more than 0.50 BTU per hour per square foot per deg. F, when tested in conformance with ASTM C 1363.
      b. Fire-Resistance Rated and Other Doors: Manufacturer’s standard core necessary to meet indicated fire-resistance and temperature-rise ratings.
   6. Vertical Edges: Manufacturer's standard edge with mechanical edge seam welded and finished before priming.
   7. Top and Bottom Edges: Close edges with flush or inverted channels or end closures fabricated from same material as face sheets, but not less than at least 0.0747-inch BMT (MSG 14). Provide screw-on caps at exterior doors.
   8. Hardware Reinforcement: Fabricate reinforcing from the same material as door in conformance with the following. Reinforcement must be offset to allow faces of mortised hardware devices to be installed flush with door surfaces.
      a. Hinges: At least 0.1094-inch BMT (MSG 12) continuous stile extruded and tapped to at least 0.1875-inch BMT (MSG 07) reinforcement, unless another thickness and size are

required by the by the hardware manufacturer based on actual in-service conditions applicable to the project.

b. Lock Front, Strike, and Flushbolt Reinforcement: At least 0.1094-inch BMT (MSG 12) by sizes required by the hardware manufacturer, unless another thickness is required by the by the hardware manufacturer based on actual in-service conditions applicable to the project.

c. Lock Reinforcement: At least 0.0625-inch BMT (MSG 16) by size as required by lock manufacturer, unless another thickness is required by the by the hardware manufacturer based on actual in-service conditions applicable to the project.

d. Closer Reinforcement: At least 0.0625-inch BMT (MSG 16) one-piece channel by size as required by the closer manufacturer, unless another thickness is required by the by the hardware manufacturer based on actual in-service conditions applicable to the project.

e. Exit Device Reinforcement: 0.0781-inch BMT (MSG 14) by 18 inches high by 3-3/16 inches wide, unless another thickness and size are required by the by the hardware manufacturer based on actual in-service conditions applicable to the project.

f. Other Hardware Reinforcement: Supplied, required, recommended, or accepted by the manufacturer for actual in-service conditions applicable to the project.

g. Hardware manufacturers' recommended reinforcement units may be used in lieu of specified reinforcement.

9. Electrical Device Requirements: Make provisions for installation of electrified hardware and door electrical devices, and arrange so that wiring is readily installed, removed, and replaced.

a. Provide cutouts and reinforcement required for installation of devices.

b. Provide metal conduits or raceways to accommodate wiring between devices. (e.g., from electric hinge to other electric door hardware)

2.3 ACCESSORIES

A. Filler: Material conforming to the requirements of SDI publication SDI 100, "*Specifications for Standard Steel Doors and Frames*". Use UL-listed materials in doors scheduled to have a fire-resistance rating.

B. Door Louvers:

1. Products: Provide the following manufactured by USA Fire Door LLC, or equal.

a. Standard Door Louvers: "800 Series", or equal, 0.0478-inch BMT (MSG 18) uncoated steel louver door inserts.

b. Fire-Rated Door Louvers: "1900 Series", or equal, 0.0478-inch BMT (MSG 18) uncoated steel louver door inserts.

2. Requisite Properties:

a. Blades: Inverted Y or Z blades.

b. Minimum Free Area: Between 40 and 50 percent.

c. Finish: Manufacturer's standard powder coat finish; custom colors selected by the Architect.

C. Fastenings: Provide backings, inserts, loose connection hardware, fasteners, anchors, attachments, connectors, and other items supplied, required, recommended, or accepted by the manufacturer for actual in-service conditions applicable to the project.

D. Other Accessories: Provide accessories and secondary items normally furnished or necessary for a complete installation; or supplied, required, recommended, or accepted by the manufacturer for actual in-service conditions applicable to the project.

2.4 MATERIALS

A. Uncoated Carbon Steel Sheet:
   1. Door Material: Finished CRS coil, sheet, and strip conforming to ASTM A 1008, CS Type B (commercial steel), exposed, temper rolled, regular matte surface finish (40 to 59 AA), and oiled (sheet must be thoroughly cleaned to remove the oil prior to painting).
   2. Hardware Reinforcements: HRS coil, sheet, and strip conforming to ASTM A 1011, CS Type B (commercial steel), as-rolled surface finish, with cut edges.

B. Zinc-Iron Alloy Coated (Galvannealed) Steel Sheet: ASTM A 653, CS Type B (commercial steel), with equal coating weight on each surface.
   1. Coating Designation: Provide at least a A60 (galvannealed) minimum coating designation.
   2. Surface Finish: Non-spangled matte finish.
   3. Surface Treatment: Provide mill phosphate surface treatment. (provides enhanced lubricating characteristics)

2.5 FINISHES

A. Uncoated Steel HM Frames: Provide shop-applied phosphate (paint-grip) pre-treatment and baked on rust inhibitive primer. Primer must be compatible with either field-applied paint or field-applied coating systems specified in Division 09, as applicable.

B. Zinc Coated and Zinc-Iron Alloy Coated Steel and Stainless Steel HM Frames: Provide shop-applied bonderized pre-treatment (not prime painted).

PART 3 - EXECUTION

3.1 INSTALLATION REQUIREMENTS

A. General:
   1. Ensure proper supervision practices are followed at the project site before the installer begins work and at all times during installation.
   2. Verify in-place supporting and adjacent construction conforms to the manufacturer’s requirements or recommendations, and satisfies all other conditions that might affect the quality of installation or the durability, appearance, or performance of installed doors and adjacent items.
   3. Install doors in conformance with the quality standards publications using using materials and methods required, recommended, or accepted by the manufacturer, along with manufacturer-recommended accessories and techniques.
   4. Set items true to line, to required levels and lines, and plumb, level, and square, without warp or rack, with flush well-fitted joints, and in alignment with adjacent construction.
   5. Perform drilling and fitting as required or necessary for an accurate fit and complete installation.
   6. Securely attach doors in place to supporting construction.
   7. Installed doors must be warrantable. Do not install, correct, or replace doors in a manner that results in any warranty or guarantee becoming void.

B. Installation Tolerances:
   1. Fire-Rated Doors: Install doors with clearances in conforming to NFPA 80.
   2. Smoke- Control Doors: Install doors with clearances in conforming to NFPA 105.

3. Other Doors: Install doors within the following clearance variations.
    a. Jambs and Head: 1/8-inch plus or minus 1/16 inch.
    b. Between Edges of Pairs of Doors: 1/8-inch plus or minus 1/16-inch.
    c. Between Bottom of Door and Top of Threshold: Maximum 1/4-inch.
    d. Between Bottom of Door and Top of Finish Floor (No Threshold): Maximum 1/4-inch.

C. Adjusting:
1. Lubricate and adjust doors and hardware to function properly, free from warp, twist, binding, and distortion.
2. Confirm latches and locks engage securely without forcing or binding.

D. Correction and Repair:
1. Correct deficiencies that do not conform to the Contract Documents.
2. Repair non-conforming, damaged and defective work.
3. Replace soiled items that cannot be cleaned to the same condition as new.

E. Protection:
1. Protect installed doors in place from soiling, deterioration, and damage until Substantial Completion.
2. Remove protection when it's no longer needed and before Substantial Completion.

END OF SECTION

©AWCWEST 18E22 All rights reserved.

SECTION 08 31 16
ACCESS PANELS

PART 1 - GENERAL

1.01 SUMMARY

A. Section Includes:
   1. Metal access panel assemblies.
   2. Supplementary components and accessories normally furnished or necessary for a complete installation, whether or not such items are indicated on the Drawings or included in the Specifications.

1.02 SECTION REQUIREMENTS

A. Submittals: Submit product data and shop drawings.

PART 2 - PRODUCTS

2.01 METAL ACCESS PANEL AND FRAMES

A. Manufacturers: Provide products manufactured by one of the following, or equal.
   1. Activar Construction Products Group, Inc.
   2. Acudor Products, Inc.
   3. Karp Associates, Inc.
   4. Nystrom Building Products.

B. Non-Rated Access Panels at Ceramic Tile Wall Finishes:
   1. Description: Flush stainless steel access panels and frames.
   2. Product: “JL Industries Model TMS” manufactured by Activar Construction Products Group, Inc., or equal.
   3. Material: Type 304, 0.0625-inch BMT (USSG 16) stainless steel frame with at least 0.0625-inch BMT (USSG 16) stainless steel door.
   4. Trim: At least 0.0312-inch BMT (USSG 22) stainless steel flange.
   5. Hinge: Concealed continuous piano hinge.

C. Non-Rated Access Panels Elsewhere:
   1. Description: Flush concealed frame access panels with wallboard bead.
   2. Product: “JL Industries Model TMW” manufactured by Activar Construction Products Group, Inc., or equal.
   3. Material: At least 0.0598-inch BMT (MSG 16) cold-rolled uncoated steel sheet frame and 0.0598-inch BMT (MSG 16) cold-rolled uncoated steel sheet door.
   4. Trim: At least 0.0299-inch BMT (MSG 22) HDG steel sheet gypsum board tape-in bead flange.
   5. Hinge: Concealed continuous piano hinge.
   6. Finish: Manufacturer’s standard shop-applied phosphate pre-treatment and baked on rust inhibitive primer for field-applied finish.

D. Fire-Resistance Rated Access Panels:

1. Description: Fire-rated and insulated concealed frame access panel with wallboard bead.
2. Product: “JL Industries Model FDW” manufactured by Activar Construction Products Group, Inc., or equal.
3. Material: At least 0.0598-inch BMT (MSG 16) cold-rolled uncoated steel sheet frame with At least 0.0359-inch BMT (MSG 20) cold-rolled uncoated steel sheet door.
4. Trim: At least 0.0299-inch BMT (MSG 22) HDG steel sheet gypsum board tape-in bead flange.
5. Insulation: At least 2-inch thick fire-resistive mineral wool insulation sandwiched between access panel faces.
6. Hinge: Concealed continuous piano hinge.
7. Finish: Manufacturer’s standard shop-applied phosphate pre-treatment and baked on rust inhibitive primer for field-applied finish.

E. Requisite Properties:
1. Provide at least 24-inch square or larger panel assemblies where servicemen must access spaces through panels.
2. Elsewhere, provide at least 12-inch square panel assemblies.

F. Accessories:
1. Locking Devices:
    a. Public Areas: Provide one mortise cylinder lock per access door. Key all locks alike, unless otherwise noted.
    b. Other Areas: Provide flush, key-operated cam lock. Key all locks alike, unless otherwise noted.
    c. Panels 24 inches or More in Any Dimension: Provide interior latch to permit access panel opening from inside without a key.
2. Gaskets: Apply manufacturer’s optional gasketing to frames of units that do not come standard with gaskets.
3. Fastenings: Provide backings, inserts, loose connection hardware, fasteners, anchors, attachments, connectors, and other items supplied, required, recommended, or accepted by the manufacturer for actual in-service conditions applicable to the project.
4. Other Accessories: Provide other accessories and secondary items normally furnished or necessary for a complete installation; or supplied, required, recommended, or accepted by the manufacturer for actual in-service conditions applicable to the project.

PART 3 - EXECUTION

3.01 INSTALLATION REQUIREMENTS

A. General:
1. Ensure proper supervision practices are followed at the project site before the installer begins work and at all times during installation.
2. Verify in-place supporting and adjacent construction conforms to the manufacturer’s requirements or recommendations and satisfies all other conditions that might affect the quality of installation or the durability, appearance, or performance of installed access panels and adjacent items.
3. Install access panels using materials and methods required, recommended, or accepted by the manufacturer, along with manufacturer-recommended accessories and techniques.

4. Set items true to line, to required levels and lines, and plumb, level, and square, without warp or rack, with flush well-fitted joints, and in alignment with adjacent construction
5. Securely attach access panels in place to supporting construction.
6. Installed access panels must be warrantable. Do not install, correct, or replace access panels in a manner that results in any warranty or guarantee becoming void.

B. Installation Tolerances: Install access panelsto an allowable tolerance variation of not more than 1/4-inch from true position and not more than 1/8-inch and from plumb, level, and alignment.

C. Correction and Repair:
1. Correct deficiencies that do not conform to the Contract Documents.
2. Repair non-conforming, damaged and defective work.
3. Replace soiled items that cannot be cleaned to the same condition as new.

D. Protection:
1. Protect installed access panels in place from soiling, deterioration, and damage until Substantial Completion.
2. Remove protection when it's no longer needed and before Substantial Completion.

END OF SECTION

©AWCWEST 18E22 All rights reserved.
RSTLNE, TAGTIS, TAGFFE, ELMTC, CLSC1090

SECTION 08 41 13
ALUMINUM-FRAMED ENTRANCES AND STOREFRONTS

PART 1 - GENERAL

1.01 SUMMARY

A. Section Includes:
   1. Aluminum-framed storefront assemblies.
   2. Aluminum-framed glass entrance doors.
   3. Site tests and inspections.
   4. Supplementary components and accessories normally furnished or necessary for a complete installation, whether or not such items are indicated on the Drawings or included in the Specifications.

B. Related Requirements:
   1. Section 08 71 00 for door hardware.
   2. Section 08 81 00 for glass glazing.

1.02 SECTION REQUIREMENTS

A. Delegated Design Requirements:
   1. Engineer, fabricate, assemble, and install entrance doors and storefronts that conform to the profiles indicated and other Contract Document requirements; meet specified performance criteria; and result in structurally sound, non-corroding, and weathertight assemblies that accommodate, resist, distribute, or transfer in-service loads without incipient or catastrophic failure.
   2. Maintain visual design concept indicated, including sizes, profiles, and alignments. Deviation from visual design concept is non-conforming work and prohibited without prior written acceptance by the Architect.

B. Qualifications:
   1. Manufacturer: Company or individuals must have at least 10 years' experience manufacturing entrance doors and storefronts installed on at least 200 previous projects similar to this project in size, material, design, and complexity.
   2. Installer: Company or individuals must have at least 5 years' experience installing entrance doors and storefronts for at least 30 previous projects similar to this project in size, material, design, and complexity.
   3. Supervisors: Individuals must have at least 7 years' experience installing entrance doors and storefronts for at least 30 previous projects similar to this project in size, material, design, and complexity, including at least 2 years' supervisory experience directing and leading entrance and storefront installers.
   4. Engineer: Must be a licensed professional structural engineer registered to practice in California having at least 10 years' experience performing the kind of engineering services indicated for at least 20 previous projects similar to this project in size, material, design, and complexity.

C. Submittals: Submit product data, door schedule, and shop drawings, samples, delegated design subnittals, and written descriptions of specified qualifications.

D. Preinstallation Meeting:

1. Hold a meeting after submittal approval and at least 10 business days before beginning installation.
2. During the meeting, review the Contract Documents, submittals, project conditions, and installation sequence and methods, including special details and conditions that might affect installation
3. Identify and discuss adverse or unfavorable conditions detrimental to protecting stored materials or to installation; or to the quality, durability, appearance, or performance of installed entrances and storefronts. Resolve each condition.
4. Finalize construction schedule.
5. Record significant discussions and distribute meeting minutes. Do not begin installation until disagreements are successfully resolved to the satisfaction of all parties.

E. Mockups: If an *ex-situ* exterior wall integrated mockup is required for this project, then integrate entrance doors and storefronts into the mockup as part of the work of this specification section.

F. Warranty:
1. Manufacturer Warranty: Furnish to the Owner a written manufacturer warranty for products, components, and accessories against all patent and latent defects, and incipient and catastrophic failure for 5 years; and for finishes against color fading, chalking, cracking, checking, peeling, and adhesive failure for 20 years.
2. Installer Guarantee: Furnish to the Owner a written guarantee for the work of this specification section against all defects in materials and workmanship for 2 years from date of acceptance. Guarantees must be properly prepared and signed on the guarantee form in Division 01.

PART 2 - PRODUCTS

2.01 MANUFACTURERS

A. Manufacturer: Provide products manufactured by one of the following, or equal.
1. Arcadia.
2. EFCO Corp.
3. Kawneer Co., Inc.
4. Wausau Window and Wall Systems.

2.02 ALUMINUM-FRAMED STOREFRONTS

A. Products: Provide one of the following, or equal.
1. “AFG451 Series” manufactured by Arcadia.
2. “Trifab VersaGlaze 451 Framing System” manufactured by Kawneer.
3. “4500 Series Storefront Framing” manufactured by Wausau Window and Wall Systems.

B. Requisite Properties:
1. Faming Size: 2 inches by 4-1/2 inches.
2. Glazing Thickness: One-inch.
3. Glazing Installation: Outside glazed.
4. Exposed Finishes: Specified in Section 05 05 14.
5. Concealed Steel Finishes: Prepare surfaces and apply shop primer specified in Section 05 05 13.
6. Concealed Aluminum Finishes: Prepare surfaces and coat aluminum surfaces in contact with masonry, concrete, or steel with bituminous paint specified Section 05 50 00.

2.03 ALUMINUM-FRAMED ENTRANCES

A. Products: Provide one of the following, or equal.
   1. “MS362 Series” manufactured by Arcadia.
   2. “350 Medium Stile Entrance” manufactured by Kawneer.
   3. “Medium Stile Standard Entrances” manufactured by Wausau Window and Wall Systems.

B. Requisite Properties:
   1. Entrance Door Thickness: 1-3/4 inches.
   2. Vertical Stile Width: 3-1/2 inches.
   3. Top Rail Width: 3-1/2 inches.
   4. Bottom Rail Width: 10 inches.
   5. Glazing Thickness: One-inch.
   6. Glazing Stops: Square, snap-on, extruded-aluminum stops and preformed gaskets. Provide non-removable glazing stops on outside of door.
   7. Exposed Finishes: Match storefront framing.

2.04 MATERIALS

A. Aluminum:
   1. Standard Aluminum Structural Profiles: ASTM B 308, Alloy 6061-T6.
   2. Extruded Aluminum Bars and Shapes: ASTM B 221, Alloy6063-T5 or T6 for primary components; Alloy 6063-T5 or T6, 6005-T5, 6105-T5 or 6061-T6 for structural components.
   3. Aluminum Sheet and Plate: ASTM B 209, Alloy 5005-H32 or Alloy 3003-H14.
   4. Extruded Aluminum Tubes: ASTM B 221 or ASTM B 483.
   5. Structural Aluminum Pipe and Round Tube: ASTM B 429.

B. Glazing: Specified in Section 08 81 00.

2.05 ACCESSORIES

A. Steel Reinforcement: When required by engineering calculations, provide steel bent plate or shapes conforming to ASTM A 36 and shop primed in conformance with Section 05 05 13.

B. Brackets: Provide high-strength aluminum or austenitic stainless steel brackets and reinforcements.

C. Sill Flashing: Fabricate from at least 0.060-inch thick aluminum sheet, with welded end dams and finished to match frames.

D. Concealed Flashing: Stainless steel sheet conforming to ASTM A 240 (annealed) Type 04 (for all other applications), No. 2D (matte) finish, annealed, No. 4 (soft) temper (hardness not more than Rockwell B-65; can be bent flat upon itself in any direction).

E. Movement Joints: Slip-joint linings, slip pads, spacers, and sleeves of material and type supplied, required, recommended, approved, or accepted by the by the manufacturer.

F. Glazing Gaskets: Manufacturer’s standard ethylene propylene diene monomer (EPDM) conforming to ASTM C 864 and having a Shore A hardness value of at least 70, unless another type of gasket is supplied, required, recommended, or accepted by the manufacturer.

G. Silicone Gutter Gaskets: Custom extrusions installed with low modulus single-component sealant specified in Section 07 92 00.

H. Fastenings: Provide backings, inserts, loose connection hardware, fasteners, anchors, attachments, connectors, and other items supplied, required, recommended, or accepted by the manufacturer for actual in-service conditions applicable to the project.
   1. Where fasteners are subject to loosening or turning out from thermal and structural movements, wind loads, or vibration, use self-locking devices.
   2. Reinforce framing members as required to receive fastener threads.
   3. Exposed fasteners are prohibited on faces exposed to view. Provide concealed fasteners and expansion provisions.

I. Anchors:
   1. Anchor Bolts (Anchor Rods): Cast-in-place anchors specified in Section 05 05 23 having minimum 60 ksi tensile strength.
   2. Other Anchors:

      a. Three-way adjustable anchors that accommodate fabrication and installation tolerances in material and finish compatible with adjoining materials and recommended by the manufacturer.

      b. Concrete and Masonry Inserts: Hot-dip galvanized cast-iron, malleable-iron, or steel inserts complying with ASTM A 123 or ASTM A 153 requirements

J. Cleaning Agent and Cloth: Supplied, required, recommended, or accepted by the structural sealant manufacturer.

K. Other Accessories: Provide accessories and secondary items normally furnished or necessary for a complete installation; or supplied, required, recommended, or accepted by the manufacturer for actual in-service conditions applicable to the project.

PART 3 - EXECUTION

3.01 INSTALLATION REQUIREMENTS

A. General:
   1. Ensure proper supervision practices are followed at the project site before the installer begins work and at all times during installation.
   2. Verify in-place supporting and adjacent construction conforms to the manufacturer’s requirements or recommendations, and satisfies all other conditions that might affect the quality of installation or the durability, appearance, or performance of installed entrance doors and storefronts and adjacent items.
   3. Install entrance doors and storefronts using using materials and methods required, recommended, or accepted by the manufacturer, along with manufacturer-recommended accessories and techniques.
   4. Set items true to line, to required levels and lines, and plumb, level, and square, without warp or rack, with flush well-fitted joints, and in alignment with adjacent construction.
   5. Perform drilling and fitting as required or necessary for an accurate fit and complete installation.
   6. Securely attach entrance doors and storefronts in place to supporting construction.

7. Installed entrance doors and storefronts must be warrantable. Do not install, correct, or replace entrance doors and storefronts in a manner that results in any warranty or guarantee becoming void.

B. Special Techniques:
1. Use concealed fasteners and anchorages. Provide washer head fasteners with bonded sealing washers where required to protect metal surfaces and to make weathertight connections.
2. Form closely-fitted joints with exposed connections accurately located and secured.
3. Provide uniform-width perimeter reveals and opening sealants and joint fillers as indicated.
4. Install concealed gaskets, flashings, and joint fillers as the storefront installation progresses.

C. Entrance Door Installation Tolerances: Install entrance doors within the following clearance variations.
1. Jambs and Head: 1/8-inch plus or minus 1/16 inch.
2. Between Edges of Pairs of Doors: 1/8-inch plus or minus 1/16-inch.
3. Between Bottom of Door and Top of Threshold: Maximum 1/4-inch.
4. Between Bottom of Door and Top of Finish Floor (No Threshold): Maximum 1/4-inch.

D. Storefront Installation Tolerances: Install storefronts within the following tolerance variations.
1. Maximum Variation from True Position: Not more than 1/8-inch in 12 feet nor more than 1/4-inch over any total length.
2. Maximum Variation from Plane: Not more than 1/8-inch in 12 feet nor more than 1/4-inch over any total length.
3. Maximum Out of Plumb: Not more than 1/8-inch in 10 feet.
4. Maximum Out of Level: Not more than 1/8-inch in 20 feet nor more than 1/4-inch in any 40-foot run.
5. Maximum Offset between Components at Joints:

    a. In-line Surfaces: Not more than 1/16-inch

    b. Corners: : Not more than 1/32-inch
6. Squareness: Not more than 1/8-inch difference in diagonal measurements.

E. Adjusting:
1. Lubricate and adjust entrance doors and hardware to function properly, free from warp, twist, binding, and distortion.
2. Confirm latches and locks engage securely without forcing or binding.

F. Site Tests and Inspections:
1. General: Include site tests and inspections as part of the work of this specification section. The Owner’s testing and inspection agency performs tests and inspections.
2. Required Tests:

    a. Water Leakage Hose Tests: Perform water leakage hose tests in conformance with ASTM AAMA 501.2 (fixed glazing assemblies) and AAMA 502 (operable window units).

    b. Air and Water Leakage Chamber Tests: Perform air and water leakage chamber tests in conformance with ASTM AAMA 502, Test method B.

G. Correction and Repair:
1. Correct deficiencies that do not conform to the Contract Documents.
2. Repair non-conforming, damaged and defective work.

3. Repair damaged finishes. Restore finishes so that no evidence remains of corrective work. Return to the factory those items that either cannot be refinished in the field, or that contain components that cannot be refinished in the field. Make required alterations and either refinish the entire item or provide a new item.

H. Protection:

1. Protect installed entrance doors and storefronts in place from soiling, deterioration, and damage until Substantial Completion.
2. Remove protection when it's no longer needed and before Substantial Completion.

END OF SECTION

©AWCWEST 18E22 All rights reserved.
RSTLNE, TAGDSC, ELMTB, CLSB2020, CLSB2050, ELMTC, CLSC1010, CLSC1030

SECTION 08 71 00
DOOR HARDWARE

PART 1 - GENERAL

1.1 SUMMARY

A. Section Includes:

1. Door hardware.
2. Wall or floor-mounted electromagnetic hold-open devices.

B. Related Divisions:

1. Division 06 – door hardware installation
2. Division 07 – sealant at exterior thresholds
3. Division 08 – metal doors and frames, interior aluminum frames, wood doors, integrated security systems, specialty doors, storefront and glazed curtainwall systems.
4. Division 10 – operable partitions
5. Division 21 – fire and life safety systems
6. Division 28 – security access systems

C. Specific Omissions: Hardware for the following is specified or indicated elsewhere.

1. Windows.
2. Cabinets, including open wall shelving and locks.
3. Signs, except where scheduled.
4. Toilet accessories, including grab bars.
5. Installation.
6. Rough hardware.
7. Conduit, junction boxes & wiring.
8. Folding partitions, except cylinders where detailed.
9. Sliding aluminum doors, except cylinders where detailed.
10. Access doors and panels, except cylinders where detailed.
11. Corner Guards.
12. Welded steel gates and supports.

1.2 REFERENCES**:**

A. Use date of standard in effect as of Bid date.

1. American National Standards Institute

   a) ANSI 156.18 – Materials and Finishes.
2. BHMA – Builders Hardware Manufacturers Association
3. 2019 California Building Code

   a) Chapter 11B – Accessibility To Public Buildings, Public Accommodations, Commercial Buildings and Public Housing
4. DHI – Door and Hardware Institute

5. NFPA – National Fire Protection Association

   a) NFPA 80 2019 Edition – Standard for Fire Doors and Other Opening Protectives.
   b) NFPA 105 – Smoke and Draft Control Door Assemblies
   c) NFPA 252 – Fire Tests of Door Assemblies

6. UL – Underwriters Laboratories

   a) UL10C – Positive Pressure Fire Tests of Door Assemblies.
   b) UL 305 – Panic Hardware

7. WHI – Warnock Hersey Incorporated State of California Building Code
8. Local applicable codes
9. SDI – Steel Door Institute
10. WI – Woodwork Institute
11. AWI – Architectural Woodwork Institute
12. NAAMM – National Association of Architectural Metal Manufacturers

B. Abbreviations

1. Manufacturers**:** see table at 2.1.A of this section
2. Finishes**:** see 2.7 of this section.

1.3 SUBMITTALS & SUBSTITUTIONS

A. SUBMITTALS**:** Submit six copies of schedule per D. Only submittals printed one sided will be accepted and reviewed. Organize vertically formatted schedule into "Hardware Sets" with index of doors and headings, indicating complete designations of every item required for each door or opening. Minimum 10pt font size. Include following information**:**

1. Type, style, function, size, quantity and finish of hardware items.
2. Use BHMA Finish codes per ANSI A156.18.
3. Name, part number and manufacturer of each item.
4. Fastenings and other pertinent information.
5. Location of hardware set coordinated with floor plans and door schedule.
6. Explanation of abbreviations, symbols, and codes contained in schedule.
7. Mounting locations for hardware.
8. Door and frame sizes, materials and degrees of swing.
9. List of manufacturers used and their nearest representative with address and phone number.
10. Catalog cuts.
11. Point-to-point wiring diagrams.
12. Manufacturer's technical data and installation instructions for electronic hardware.

B. Bid and submit manufacturer's updated/improved item if scheduled item is discontinued.

C. Deviations**:** Highlight, encircle or otherwise identify deviations from "Schedule of Finish Hardware" on submittal with notations clearly designating those portions as deviating from this section.

D. If discrepancy between drawings and scheduled material in this section, bid the more expensive of the two choices, note the discrepancy in the submittal and request direction from Architect for resolution.

E. Substitutions per Division 1. Include product data and indicate benefit to the Project. Furnish operating samples on request.

F. Furnish as-built/as-installed schedule with closeout documents, including keying schedule, riser and point-to-point wiring diagrams, manufacturers' installation, adjustment and maintenance information, and supplier's final inspection report.

1.4 QUALITY ASSURANCE**:**

A. Qualifications**:**

1. Hardware supplier**:** direct factory contract supplier who employs a certified architectural hardware consultant (AHC), available at reasonable times during course of work for project hardware consultation to Owner, Architect and Contractor.

a) Responsible for detailing, scheduling and ordering of finish hardware. Detailing implies that the submitted schedule of hardware is correct and complete for the intended function and performance of the openings.

B. Hardware**:** Free of defects, blemishes and excessive play. Obtain each kind of hardware (latch and locksets, exit devices, hinges and closers) from one manufacturer.

C. Exit Doors**:** Operable from inside with single motion without the use of a key or special knowledge or effort.

D. Fire-Rated Openings**:** NFPA 80 compliant. Hardware UL10C (positive pressure) compliant for given type/size opening and degree of label. Provide proper latching hardware, non-flaming door closers, approved-bearing hinges, and resilient seals. Coordinate with wood door section for required intumescent seals. Furnish openings complete.

E. Furnish hardware items required to complete the work in accordance with specified performance level and design intent, complying with manufacturers' instructions and code requirements.

1.5 DELIVERY, STORAGE AND HANDLING**:**

A. Delivery**:** coordinate delivery to appropriate locations (shop or field).

1. Permanent keys and cores**:** secured delivery direct to Owner's representative.

B. Acceptance at Site**:** Items individually packaged in manufacturers' original containers, complete with proper fasteners and related pieces. Clearly mark packages to indicate contents, locations in hardware schedule and door numbers.

C. Storage**:** Provide securely locked storage area for hardware, protect from moisture, sunlight, paint, chemicals, dust, excessive heat and cold, etc.

1.6 PROJECT CONDITIONS AND COORDINATION**:**

A. Where exact types of hardware specified are not adaptable to finished shape or size of members requiring hardware, provide suitable types having as nearly as practical the same operation and quality as type specified, subject to Architect's approval.

B. Coordination**:** Coordinate hardware with other work. Furnish hardware items of proper design for use on doors and frames of the thickness, profile, swing, security and similar requirements indicated, as necessary for proper installation and function, regardless of omissions or conflicts in the information on the Contract Documents. Furnish related trades with the following information**:**

1. Location of embedded and attached items to concrete.
2. Location of wall-mounted hardware, including wall stops.
3. Location of finish floor materials and floor-mounted hardware.
4. At masonry construction, coordinate with the anchoring and hollow metal supplier prior to frame installation by placing a strip of insulation, wood, or foam, on the back of the hollow metal frame behind the rabbet section for continuous hinges, as well as at rim panic hardware strike locations, silencers, coordinators, and door closer arm locations. When the frame is grouted in place, the backing will allow drilling and tapping without dulling or breaking the installer's bits.
5. Locations for conduit and raceways as needed for electrical, electronic and electro-pneumatic hardware items. Fire/life-safety system interfacing. Point-to-point wiring diagrams plus riser diagrams to related trades.
6. Coordinate: flush top rails of doors at outswinging exteriors, and throughout where adhesive-mounted seals occur.
7. Manufacturers' templates to door and frame fabricators.

C. Check Shop Drawings for doors and entrances to confirm that adequate provisions will be made for proper hardware installation.

D. Environmental considerations**:** segregate unused recyclable paper and paper product packaging, uninstalled metals, and plastics, and have these sent to a recycling center.

1.7 WARRANTY**:**

A. Part of respective manufacturers' regular terms of sale. Provide manufacturers' written warranties.

B. Include factory order numbers with close-out documents warranty information:

C. Minimum warranties:

1.	Locksets:	Three years
2.	Extra Heavy Duty Cylindrical Lock:	Seven Years
3.	Exit Devices:	Three years mechanical One year electrical
4.	Closers:	Thirty years mechanical Two years electrical
5.	Hinges:	One year
6.	Other Hardware	Two years

1.8 COMMISSIONING:

A. Conduct these tests prior to request for certificate of substantial completion:

1. With installer present, test door hardware operation with climate control system and stairwell pressurization system both at rest and while in full operation.
2. With installer, access control contractor and electrical contractor present, test electrical, electronic and electro-pneumatic hardware systems for satisfactory operation.
3. With installer and electrical contractor present, test hardware interfaced with fire/life-safety system for proper operation and release.

PART 2 PRODUCTS

2.1 MANUFACTURERS:

A. Manufacturers and their abbreviations used in this schedule:

FAL	Falcon
GLY	Glynn-Johnson Hardware
IVE	H. B. Ives
SAL	Salto
ZER	Zero International
ADA	Adams Rite
KNC	K. N. Crowder

2.2 HINGING METHODS:

A. Drawings typically depict doors at 90 degrees, doors will actually swing to maximum allowable. Use wide-throw conventional or continuous hinges as needed up to 8 inches in width to allow door to stand parallel to wall for true 180-degree opening. Advise architect if 8-inch width is insufficient.

B. Doors 3’6” or wider use 5” X 41/2” heavy weight hinges

C. Doors 8’0” use 4 hinges and add 1 hinge for every foot thereafter

D. Conform to manufacturer’s published hinge selection standard for door dimensions, weight and frequency, and to hinge selection as scheduled. Where manufacturer’s standard exceeds the scheduled product, furnish the heavier of the two choices, notify Architect of deviation from scheduled hardware.

E. Conventional Hinges: Steel or stainless steel pins and approved bearings. Hinge open widths minimum, but of sufficient throw to permit maximum door swing.

1. Outswinging exterior doors: stainless steel hinges with non-removable (NRP) pins and security studs.
2. Stainless steel material exteriors and at doors subject to corrosive atmospheric conditions.

F. Pivots: high-strength forged bronze or stainless steel, tilt-on precision bearing and bearing pin.

1. Bottom and intermediate pivots: adjustability of minus 0.063 inch, plus 0.125 inch.

2.3 LOCKSETS, LATCHSETS, DEADBOLTS:

A. Mortise Locksets and Latchsets: as scheduled.

1. Chassis: cold-rolled steel, handing field-changeable without disassembly.
2. Floating mounting tabs automatically adjusts to fit a beveled door edge.
3. Latchbolts: 0.75 inch throw stainless steel anti-friction type.
4. Lever Trim: through-bolted, accessible design, cast lever or solid extruded bar type levers as scheduled. Filled hollow tube design unacceptable.
    a) Spindles: security design independent breakaway. Breakage of outside lever does not allow access to inside lever's hubworks to gain wrongful entry.
    b) Inside lever applied by screwless shank mounting – no exposed trim mount screws.
    c) Levers rotate up or down for ease of use.
5. Furnish solid cylinder collars with wave springs. Wall of collar to cover rim of mortise cylinder.
6. Turnpieces: accessible offset turn-lever design not requiring pinching or twisting motions to operate.
7. Deadbolts: stainless steel 1-inch throw.
8. Strikes: 16 gage curved steel, bronze or brass with 1 inch deep box construction, lips of sufficient length to clear trim and protect clothing.
9. Scheduled Lock Series and Design: Falcon Longitude
10. Certifications:
    a) ANSI A156.13, 1994, Grade 1 Operational,
    b) ANSI/ASTM F476-84 Grade 31 UL Listed.
11. Accessibility: Require not more than 5 lb to retract the latchbolt or deadbolt, or both, per CBC 2019 11B-404.2.7 and 11B-309.4.

B. Extra Heavy Duty Cylindrical Locks and Latches: as scheduled.

1. Chassis: cylindrical design, corrosion-resistant plated cold-rolled steel, through-bolted.
2. Locking Spindle: stainless steel, integrated spring and spindle design.
3. Latch Retractors: forged steel. Balance of inner parts: corrosion-resistant plated steel, or stainless steel.
4. Latchbolt: solid steel.
5. Backset: 2.75 inches typically, more or less as needed to accommodate frame, door or other hardware.

6. Lever Trim**:** accessible design, independent operation, spring-cage supported, minimum 2.00 inches clearance from lever mid-point to door face.
7. Strikes**:** 16 gage curved steel, bronze or brass with 1.00 inch deep box construction, lips of sufficient length to clear trim and protect clothing.
8. Lock Series and Design**:** Falcon T series
9. Certifications**:**
    a) ANSI A156.2, 1994, Series 4000, Grade 1.
    b) UL listed for A label and lesser class single doors up to 4 feet x 8 feet.
10. Accessibility: Require not more than 5 lb to retract the latchbolt or deadbolt, or both, per CBC 2019 11B-404.2.7 and 11B-309.4

2.4 EXIT DEVICES / PANIC HARDWARE

A. General features**:**

1. Push-through push-pad design. No exposed push-pad fasteners, no exposed cavities when operated.
2. Deadlocking latchbolts, 0.75 inch projection.
3. No exposed screws to show through glass doors.
4. Non-handed basic device design with center case interchangeable with all functions, no extra parts required to effect change of function.
5. Releasable in normal operation with 15-pound maximum operating force per UBC Standard 10-4, and with 32-pound maximum pressure under 250-pound load to the door.
6. Lever design to match locksets
7. Accessibility: Require not more than 5 lb to retract the latchbolt, per CBC 2019 11B-404.2.7 and 11B-309.4.
    a) Mechanical method: where touchpad directly retracts the latchbolt with 5 lb or less of force.

2.6 CLOSERS

A. Surface Closers**:** As listed in specification

1. Full rack-and-pinion type cylinder with removable non-ferrous cover. Double heat-treated pinion shaft, single piece forged piston, chrome-silicon steel spring.
1. Non-sized, non-handed and adjustable. Place closers inside building, stairs and rooms.
2. Plates, brackets and special templating when needed for interface with particular header, door and wall conditions and neighboring hardware.
3. Adjust doors to open with not more than 5.0-pounds pressure to open at exterior doors and 5.0-pounds at interior doors. As allowed per 2019 California Building Code Section 11B-404.2.9, local authority may increase the allowable pressure for fire doors to achieve positive latching, but not to exceed 15-pounds.

a) Exception: exterior doors' pressure-to-open may be increased to 8.5-pounds if: at a single location, and one of a bank of eight leafs or fraction of eight, and one leaf of this bank is fitted with a low- or high-energy operator.

4. Separate adjusting valves for closing speed, latching speed and backcheck, fourth valve for delayed action where scheduled.
5. Extra-duty arms (EDA) at exterior doors scheduled with parallel arm units.
6. Pressure Relief Valves (PRV) not permitted.

2.7 OTHER HARDWARE

A. Automatic Flush Bolts**:** Low operating force design.

B. Overhead Stops**:** Non-plastic mechanisms and finished metal end caps. Field-changeable hold-open, friction and stop-only functions.

C. Kick Plates**:** Four beveled edges, .050 inches minimum thickness, height and width as scheduled. Sheet-metal screws of bronze or stainless steel to match other hardware.

D. Door Stops**:** Provide stops to protect walls, casework or other hardware.

1. Unless otherwise noted in Hardware Sets, provide floor type with appropriate fasteners. Where floor type cannot be used, provide wall type. If neither can be used, provide overhead type.
2. Locate overhead stops for maximum possible opening. Consult with Owner for furniture locations. Minimum**:** 90deg stop / 95deg deadstop. Note degree of opening in submittal.

E. Automatic door bottoms**:** low operating force units.

1. Include automatic type door bottoms, as opposed to fixed sweeps, at stairs and elevator lobbies to allow fine-tuning of pressurization systems.

F. Thresholds**:** As scheduled and per details. Comply with CBC 2019 11B-404.2.5. Substitute products**:** certify that the products equal or exceed specified material's thickness. Proposed substitutions**:** submit for approval.

2. Saddle thresholds**:** 0.125 inches minimum thickness.
3. Exteriors**:** Seal perimeter to exclude water and vermin. Use sealant complying with requirements in Division 7 "Thermal and Moisture Protection". Minimum 0.25 inch diameter fasteners and lead expansion shield anchors, or Red-Head #SFS-1420 (or approved equivalent) Flat Head Sleeve Anchors. National Guard Products' "COMBO" or Pemko Manufacturing's "FHSL".
4. Fire-rated openings, 90-minutes or less duration**:** use thresholds to interrupt floor covering material under the door where that material has a critical radiant flux value less than 0.22 watts per square centimeter, per NFPA 253. Use threshold unit as scheduled. If none scheduled, include a 0.25in high 5in wide saddle in the bid, and request direction from Architect.
5. Fire-rated openings, 3-hour duration**:** Thresholds, where scheduled, to extend full jamb depth.
6. Acoustic openings**:** Set units in full bed of Division-7-compliant, leave no air space between threshold and substrate.
7. Plastic plugs with wood or sheet metal screws are not an acceptable substitute for specified fastening methods.

8. Fasteners: Generally, exposed screws to be Phillips or Robertson drive. Pinned TORX drive at high security areas. Flat head sleeve anchors (FHSL) may be slotted drive. Sheet metal and wood screws: full-thread. Sleeve nuts: full length to prevent door compression.

G. Through-bolts: Do not use. Coordinate with wood doors; ensure provision of proper blocking to support wood screws for mounting panic hardware and door closers. Coordinate with metal doors and frames; ensure provision of proper reinforcement to support machine screws for mounting panic hardware and door closers.

1. Exception: surface-mounted overhead stops, holders, and friction stays.

H. Silencers: Interior hollow metal frames, 3 for single doors, 4 for pairs of doors. Leave no unfilled/uncovered pre-punched silencer holes. Intent: door bears against silencers, seals make minimal contact with minimal compression – only enough to effect a seal. Provide where seals are not used

I. Wall- & Floor-mounted electromagnetic door holders: LCN's SEM series or approved equivalent. Incorporate into U.L. listed fire & life-safety system, doors release to allow closure and latching when door's zone is in alarm state. Use minimum projection required to allow door to open as widely as allowed by wall conditions and projection of door hardware.

2.8 FINISH:

1. Generally: BHMA 626 Satin Chromium Areas using BHMA 626: furnish push-plates, pulls and protection plates of BHMA 630, Satin Stainless Steel, unless otherwise scheduled.

J. Door closers: factory powder coated to match other hardware, unless otherwise noted.

2.9 KEYING REQUIREMENTS:

A. KEYING REQUIREMENTS:

B. Key System: Keying to be determined at a meeting with the Contractor, Supplier and Owners Representative

C. Keys

2. Factory registered master key system
3. Non-I.C. construction keying: furnish inserted type partial key. At substantial completion, remove inserts in Owner’s presence; demonstrate consequent non-operability of construction key. Give all removed inserts and all construction keys to Owner, provide accounting for all the pieces.
4. Temporary cylinders remain supplier’s property.
5. Furnish 10 construction keys.
6. Furnish 2 construction insert extractor tool 35-057.
7. Furnish 2 construction control keys.

D. Key Cylinders: furnish, 6-pin solid brass construction.

E. Cylinders/Cylinder cores: furnish keyed at factory of lock manufacturer where permanent records are maintained. Locks and cylinders same manufacturer.

F. Permanent keys: furnish secured shipment direct from point of origination to Owner.

8. For estimate**:** 3 keys per change combination, 5 master keys per group, 5 grand-master keys, 3 control keys.
9. For estimate**:** VKC stamping plus “DO NOT DUPLICATE”.

G. Bitting List**:** furnish secured shipment direct from point of origination to Owner upon completion.

PART 3 - EXECUTION

3.1 ACCEPTABLE INSTALLERS**:**

A. Can read and understand manufacturers’ templates, suppliers’ hardware schedule and printed installation instructions. Can readily distinguish drywall screws from manufacturers’ furnished fasteners. Available to meet with manufacturers’ representatives and related trades to discuss installation of hardware.

3.2 PREPARATION**:**

A. Ensure that walls and frames are square and plumb before hardware installation. Make corrections before commencing hardware installation. Installation denotes acceptance of wall/frame condition.

B. Locate hardware per SDI-100 and applicable building, fire, life-safety, accessibility, and security codes.

1. Notify Architect of code conflicts before ordering material.
1. Locate latching hardware between 34 inches to 44 inches above the finished floor, per California Building Code, Section 1010.1.9.2 and 11B-404.2.7.
2. Locate panic hardware between 36 inches to 44 inches above the finished floor.
3. Where new hardware is to be installed near existing doors/hardware scheduled to remain, match locations of existing hardware.

C. Overhead stops**:** before installing, determine proposed locations of furniture items, fixtures, and other items to be protected by the overhead stop's action.

3.3 INSTALLATION

A. Install hardware per manufacturer’s instructions and recommendations. Do not install surface-mounted items until finishes have been completed on substrate. Set units level, plumb and true to line and location. Adjust and reinforce attachment substrate for proper installation and operation. Remove and reinstall or replace work deemed defective by Architect.

1. Gaskets**:** install jamb-applied gaskets before closers, overhead stops, rim strikes, etc; fasten hardware over and through these seals. Install sweeps across bottoms of doors before astragals, cope sweeps around bottom pivots, trim astragals to tops of sweeps.
2. When hardware is to be attached to existing metal surface and insufficient reinforcement exists, use RivNuts, NutSerts or similar anchoring device for screws.
3. Use manufacturers' fasteners furnished with hardware items, or submit Request for Substitution with Architect.

4. Replace fasteners damaged by power-driven tools.

B. Locate floor stops no more that 4 inches from walls and not within paths of travel. See paragraph 2.2 regarding hinge widths, door should be well clear of point of wall reveal. Point of door contact no closer to the hinge edge than half the door width. Where situation is questionable or difficult, contact Architect for direction.

C. Core concrete for exterior door stop anchors. Set anchors in approved non-shrink grout.

D. Locate overhead stops for minimum 90 degrees at rest and for maximum allowable degree of swing.

E. Drill pilot holes for fasteners in wood doors and/or frames.

F. Lubricate and adjust existing hardware scheduled to remain. Carefully remove and give to Owner items not scheduled for reuse.

3.4. ADJUSTING

A. Adjust and check for proper operation and function. Replace units, which cannot be adjusted to operate freely and smoothly.

1. Hardware damaged by improper installation or adjustment methods**:** repair or replace to Owner's satisfaction.
2. Adjust doors to fully latch with no more than 1 pound of pressure.

a) Door closer valves: turn valves clockwise until at bottom – do not force. Turn valves back out one and one-half turns and begin adjustment process from that point. Do not force valves beyond three full turns counterclockwise.

3. Adjust delayed-action closers on fire-rated doors to fully close from fully-opened position in no more than 10 seconds.
4. Adjust door closers per 1.9 this section.

B. Fire-rated doors**:**

1. Wood doors**:** adjust to 0.125 inches clearance at heads, jambs, and meeting stiles.
2. Steel doors**:** adjust to 0.063 inches minimum to 0.188 inches maximum clearance at heads, jambs, and meeting stiles.
3. Adjust wood and steel doors to 0.75 inches maximum clearance (undercut) above threshold or finish floor material under door.

C. Final inspection**:** Installer to provide letter to Owner that upon completion installer has visited the Project and has accomplished the following**:**

1. Has re-adjusted hardware.
2. Has evaluated maintenance procedures and recommend changes or additions, and instructed Owner's personnel.
3. Has identified items that have deteriorated or failed.
4. Has submitted written report identifying problems.

3.5 DEMONSTRATION**:**

A. Demonstrate mechanical hardware and electrical, electronic and pneumatic hardware systems, including adjustment and maintenance procedures.

3.6 PROTECTION/CLEANING**:**

A. Cover installed hardware, protect from paint, cleaning agents, weathering, carts/barrows, etc. Remove covering materials and clean hardware just prior to substantial completion.

B. Clean adjacent wall, frame and door surfaces soiled from installation / reinstallation process.

3.7 SCHEDULE OF FINISH HARDWARE

A. See door schedule in drawings for hardware set assignments.

HW SET: 071

3	EA	HINGE	3CB1 4.5 X 4.5	652	IVE
1	EA	ELECTRIC LOCK	IN SECTION 28	626	SAL
1	EA	CYLINDER	AS REQ'D	626	FAL
1	EA	OVERHEAD HOLDER	90H	630	GLY
3	EA	SILENCER	SR64	GRY	IVE

SALTO LOCK SPECIFIED COMPLETE WITH ALL COMPONENTS AND INSTALLATION IN SECTION 28

HW SET: 071.0

2	EA	HINGE	3CB1 4.5 X 4.5	652	IVE
1	EA	ELECTRIC LOCK	IN SECTION 28	626	SAL
1	EA	CYLINDER	AS REQ'D	626	FAL
1	EA	OVERHEAD HOLDER	90H	630	GLY
3	EA	SILENCER	SR64	GRY	IVE

SALTO LOCK SPECIFIED COMPLETE WITH ALL COMPONENTS AND INSTALLATION IN SECTION 28

HW SET: 072

3	EA	HINGE	3CB1 4.5 X 4.5	652	IVE
1	EA	ELECTRIC LOCK	IN SECTION 28	626	SAL
1	EA	CYLINDER	AS REQ'D	626	FAL
1	EA	SURFACE CLOSER	SC61 RW/PA	689	FAL
1	EA	KICK PLATE	8400 10" X 2" LDW	630	IVE
1	EA	DOME STOP	FS436/438 AS REQ'D	626	IVE
3	EA	SILENCER	SR64	GRY	IVE

SALTO LOCK SPECIFIED COMPLETE WITH ALL COMPONENTS AND INSTALLATION IN SECTION 28

HW SET: 112

3	EA	HINGE	3CB1 4.5 X 4.5	652	IVE
1	EA	PASSAGE	T101 LON	626	FAL
1	EA	SURFACE CLOSER	SC61 RW/PA	689	FAL
1	EA	KICK PLATE	8400 10" X 2" LDW	630	IVE
1	EA	MOP PLATE	8400 4" X 2" LDW	630	IVE
1	EA	DOME STOP	FS436/438 AS REQ'D	626	IVE
1	SET	PERIMETER SEALS	188 HEAD AND JAMBS	BRN	ZER

HW SET: 152.2

3	EA	HINGE	3CB1 4.5 X 4.5	652	IVE
1	EA	STOREROOM LOCK	T581H LON	626	FAL
1	EA	SURFACE CLOSER	SC61 RW/PA	689	FAL
1	EA	KICK PLATE	8400 10" X 2" LDW	630	IVE
1	EA	DOME STOP	FS436/438 AS REQ'D	626	IVE
1	SET	PERIMETER SEALS	188 HEAD AND JAMBS	BRN	ZER
1	EA	THRESHOLD	AS DETAILED	AL	ZER

HW SET: 172

3	EA	HINGE	3CB1 4.5 X 4.5	652	IVE
1	EA	ELECTRIC LOCK	IN SECTION 28	626	SAL
1	EA	CYLINDER	AS REQ'D	626	FAL
1	EA	SURFACE CLOSER	SC61 RW/PA	689	FAL
1	EA	KICK PLATE	8400 10" X 2" LDW	630	IVE
1	EA	DOME STOP	FS436/438 AS REQ'D	626	IVE
1	SET	PERIMETER SEALS	188 HEAD AND JAMBS	BRN	ZER

SALTO LOCK SPECIFIED COMPLETE WITH ALL COMPONENTS AND INSTALLATION IN SECTION 28

HW SET: 172.2

3	EA	HINGE	3CB1 4.5 X 4.5	652	IVE
1	EA	ELECTRIC LOCK	IN SECTION 28	626	SAL
1	EA	CYLINDER	AS REQ'D	626	FAL
1	EA	SURFACE CLOSER	SC61 RW/PA	689	FAL
1	EA	KICK PLATE	8400 10" X 2" LDW	630	IVE
1	EA	DOME STOP	FS436/438 AS REQ'D	626	IVE
1	SET	PERIMETER SEALS	188 HEAD AND JAMBS	BRN	ZER
1	EA	THRESHOLD	AS DETAILED	AL	ZER

SALTO LOCK SPECIFIED COMPLETE WITH ALL COMPONENTS AND INSTALLATION IN SECTION 28

HW SET: 173

3	EA	HINGE	3CB1 4.5 X 4.5	652	IVE
1	EA	ELECTRIC LOCK	IN SECTION 28	626	SAL
1	EA	CYLINDER	AS REQ'D	626	FAL
1	EA	SURFACE CLOSER	SC61 SS	689	FAL
1	EA	KICK PLATE	8400 10" X 2" LDW	630	IVE
1	SET	PERIMETER SEALS	188 HEAD AND JAMBS	BRN	ZER

SALTO LOCK SPECIFIED COMPLETE WITH ALL COMPONENTS AND INSTALLATION IN SECTION 28

HW SET: 182.2

3	EA	HINGE	3CB1 4.5 X 4.5	652	IVE
1	EA	FIRE EXIT HARDWARE	AX-F-25-R-L-LON	626	FAL
1	EA	IC RIM CYLINDER	951	626	FAL
1	EA	CYLINDER	AS REQ'D	626	FAL
1	EA	SURFACE CLOSER	SC61 RW/PA	689	FAL
1	EA	KICK PLATE	8400 10" X 2" LDW	630	IVE
1	EA	DOME STOP	FS436/438 AS REQ'D	626	IVE
1	SET	PERIMETER SEALS	188 HEAD AND JAMBS	BRN	ZER
1	EA	AUTO DOOR BOTTOM	355A	AL	ZER
1	EA	THRESHOLD	AS DETAILED	AL	ZER

HW SET: 182.5

3	EA	HINGE	3CB1HW 5 X 4.5	652	IVE
1	EA	FIRE EXIT HARDWARE	AX-F-25-R-L-LON	626	FAL
1	EA	IC RIM CYLINDER	951	626	FAL
1	EA	SURFACE CLOSER	SC61 RW/PA	689	FAL
1	EA	DOME STOP	FS436/438 AS REQ'D	626	IVE
1	SET	PERIMETER SEALS	188 HEAD AND JAMBS	BRN	ZER
1	EA	AUTO DOOR BOTTOM	355A	AL	ZER
1	EA	THRESHOLD	AS DETAILED	AL	ZER

HW SET: 192

3	EA	HINGE	3CB1 4.5 X 4.5	652	IVE
1	EA	FIRE EXIT HARDWARE	AX-F-25-R-EO	626	FAL
1	EA	ELEC PANIC DEVICE TRIM	IN SECTION 28	626	SAL
1	EA	CYLINDER	AS REQ'D	626	FAL
1	EA	SURFACE CLOSER	SC61 RW/PA	689	FAL

1	EA	KICK PLATE	8400 10" X 2" LDW	630	IVE
1	EA	DOME STOP	FS436/438 AS REQ'D	626	IVE
1	SET	PERIMETER SEALS	188 HEAD AND JAMBS	BRN	ZER

SALTO PANIC DEVICE TRIM SPECIFIED COMPLETE WITH ALL COMPONENTS AND INSTALLATION
IN SECTION 28

HW SET: 192.2

3	EA	HINGE	3CB1 4.5 X 4.5	652	IVE
1	EA	FIRE EXIT HARDWARE	AX-F-25-R-EO	626	FAL
1	EA	ELEC PANIC DEVICE TRIM	IN SECTION 28	626	SAL
1	EA	CYLINDER	AS REQ'D	626	FAL
1	EA	SURFACE CLOSER	SC61 RW/PA	689	FAL
1	EA	KICK PLATE	8400 10" X 2" LDW	630	IVE
1	EA	DOME STOP	FS436/438 AS REQ'D	626	IVE
1	SET	PERIMETER SEALS	188 HEAD AND JAMBS	BRN	ZER
1	EA	AUTO DOOR BOTTOM	355A	AL	ZER
1	EA	THRESHOLD	AS DETAILED	AL	ZER

SALTO PANIC DEVICE TRIM SPECIFIED COMPLETE WITH ALL COMPONENTS AND INSTALLATION
IN SECTION 28

HW SET: 352

6	EA	HINGE	3CB1 4.5 X 4.5	652	IVE
1	SET	AUTO FLUSH BOLT	FB31/41 AS REQ'D	626	IVE
1	EA	DUST PROOF STRIKE	DP1/2 AS REQ'D	626	IVE
1	EA	STOREROOM LOCK	T581H LON	626	FAL
1	EA	COORDINATOR	COR2-COMPLETE	628	IVE
2	EA	SURFACE CLOSER	SC61 RW/PA	689	FAL
2	EA	KICK PLATE	8400 10" X 1" LDW	630	IVE
2	EA	DOME STOP	FS436/438 AS REQ'D	626	IVE
1	SET	PERIMETER SEALS	188 HEAD AND JAMBS	BRN	ZER
1	EA	ASTRAGAL	44STST X 188	600	ZER

HW SET: 372.3

6	EA	HINGE	3CB1 4.5 X 4.5	652	IVE
1	SET	AUTO FLUSH BOLT	FB31/41 AS REQ'D	626	IVE
1	EA	DUST PROOF STRIKE	DP1/2 AS REQ'D	626	IVE
1	EA	ELECTRIC LOCK	IN SECTION 28	626	SAL
1	EA	CYLINDER	AS REQ'D	626	FAL

1	EA	COORDINATOR	COR2-COMPLETE	628	IVE
1	EA	SURFACE CLOSER	SC61 RW/PA	689	FAL
1	EA	SURFACE CLOSER	SC61 SS	689	FAL
2	EA	KICK PLATE	8400 10" X 1" LDW	630	IVE
1	EA	DOME STOP	FS436/438 AS REQ'D	626	IVE
1	SET	PERIMETER SEALS	188 HEAD AND JAMBS	BRN	ZER
1	EA	ASTRAGAL	44STST X 188	600	ZER

SALTO LOCK SPECIFIED COMPLETE WITH ALL COMPONENTS AND INSTALLATION IN SECTION 28

HW SET: 392C.2

6	EA	HINGE	3CB1 4.5 X 4.5	652	IVE
2	EA	FIRE EXIT HARDWARE	AX-F-25-C-EO-LBR	626	FAL
2	EA	ELEC PANIC DEVICE TRIM	IN SECTION 28	626	SAL
2	EA	CYLINDER	AS REQ'D	626	FAL
2	EA	SURFACE CLOSER	SC61 RW/PA	689	FAL
2	EA	KICK PLATE	8400 10" X 1" LDW	630	IVE
2	EA	DOME STOP	FS436/438 AS REQ'D	626	IVE
1	SET	PERIMETER SEALS	188 HEAD AND JAMBS	BRN	ZER
1	SET	MEETING ASTRAGAL	328AA	628	ZER
1	EA	THRESHOLD	AS DETAILED	AL	ZER

SALTO PANIC DEVICE TRIM SPECIFIED COMPLETE WITH ALL COMPONENTS AND INSTALLATION IN SECTION 28

HW SET: 425

3	EA	HINGE	3CB1 4.5 X 4.5	630	IVE
1	EA	PRIVACY W/INDICATOR	MA301 LGN	626	FAL
1	EA	SURFACE CLOSER	SC61 RW/PA	689	FAL
1	EA	KICK PLATE	8400 10" X 2" LDW	630	IVE
1	EA	DOME STOP	FS436/438 AS REQ'D	626	IVE
1	SET	PERIMETER SEALS	328AA HEAD AND JAMBS	AL	ZER
1	EA	AUTO DOOR BOTTOM	355A	AL	ZER
1	EA	THRESHOLD	AS DETAILED	AL	ZER

HW SET: 462

3	EA	HINGE	3CB1 4.5 X 4.5 NRP SEC STUD	630	IVE
1	EA	ENTRY LOCK	MA621 LGN	626	FAL
1	EA	CLOSER	SC81 HD	689	FAL
1	EA	KICK PLATE	8400 10" X 2" LDW	630	IVE

1	EA	FLOOR STOP	FS441/442 AS REQUIRED	626	IVE
1	SET	PERIMETER SEALS	328AA HEAD AND JAMBS	AL	ZER
1	EA	AUTO DOOR BOTTOM	355A	AL	ZER
1	EA	THRESHOLD	AS DETAILED	AL	ZER

HW SET: 473

3	EA	HINGE	3CB1 4.5 X 4.5 NRP SEC STUD	630	IVE
1	EA	ELECTRIC LOCK	IN SECTION 28	626	SAL
1	EA	CYLINDER	AS REQ'D	626	FAL
1	EA	SURFACE CLOSER	SC81 SS	689	FAL
1	EA	KICK PLATE	8400 10" X 2" LDW	630	IVE
1	SET	PERIMETER SEALS	328AA HEAD AND JAMBS	AL	ZER
1	EA	AUTO DOOR BOTTOM	355A	AL	ZER
1	EA	THRESHOLD	AS DETAILED	AL	ZER

SALTO LOCK SPECIFIED COMPLETE WITH ALL COMPONENTS AND INSTALLATION IN SECTION 28

HW SET: 476

3	EA	HINGE	3CB1 4.5 X 4.5	630	IVE
1	EA	ELECTRIC LOCK	IN SECTION 28	626	SAL
1	EA	CYLINDER	AS REQ'D	626	FAL
1	EA	SURFACE CLOSER	SC81 RW/PA	689	FAL
1	EA	OVERHEAD STOP	90S	630	GLY
1	EA	KICK PLATE	8400 10" X 2" LDW	630	IVE
1	SET	PERIMETER SEALS	328AA HEAD AND JAMBS	AL	ZER
1	EA	AUTO DOOR BOTTOM	355A	AL	ZER
1	EA	THRESHOLD	AS DETAILED	AL	ZER

SALTO LOCK SPECIFIED COMPLETE WITH ALL COMPONENTS AND INSTALLATION IN SECTION 28
SPECIAL TEMPLATE MAY BE REQUIRED TO INSTALL OVERHEAD STOP WITH CLOSER

HW SET: 485

3	EA	HINGE	3CB1 4.5 X 4.5	630	IVE
1	EA	PANIC HARDWARE	AX-25-R-L-LON	626	FAL
1	EA	IC RIM CYLINDER	951	626	FAL
1	EA	SURFACE CLOSER	SC81 RW/PA	689	FAL
1	EA	KICK PLATE	8400 10" X 2" LDW	630	IVE
1	EA	DOME STOP	FS436/438 AS REQ'D	626	IVE
1	SET	PERIMETER SEALS	328AA HEAD AND JAMBS	AL	ZER
1	EA	AUTO DOOR BOTTOM	355A	AL	ZER
1	EA	THRESHOLD	AS DETAILED	AL	ZER

HW SET: 492

3	EA	HINGE	3CB1 4.5 X 4.5 NRP SEC STUD	630	IVE
1	EA	FIRE EXIT HARDWARE	AX-25-R-EO	626	FAL
1	EA	ELEC PANIC DEVICE TRIM	IN SECTION 28	626	SAL
1	EA	CYLINDER	AS REQ'D	626	FAL
1	EA	CLOSER	SC81 HD	689	FAL
1	EA	KICK PLATE	8400 10" X 2" LDW	630	IVE
1	EA	FLOOR STOP	FS441/442 AS REQUIRED	626	IVE
1	SET	PERIMETER SEALS	328AA HEAD AND JAMBS	AL	ZER
1	EA	AUTO DOOR BOTTOM	355A	AL	ZER
1	EA	THRESHOLD	AS DETAILED	AL	ZER

SALTO PANIC DEVICE TRIM SPECIFIED COMPLETE WITH ALL COMPONENTS AND INSTALLATION IN SECTION 28

HW SET: 492.5

3	EA	HINGE	3CB1HW 5 X 4.5 NRP SEC STUD	630	IVE
1	EA	FIRE EXIT HARDWARE	AX-25-R-EO	626	FAL
1	EA	ELEC PANIC DEVICE TRIM	IN SECTION 28	626	SAL
1	EA	CYLINDER	AS REQ'D	626	FAL
1	EA	CLOSER	SC81 HD	689	FAL
1	EA	KICK PLATE	8400 10" X 2" LDW	630	IVE
1	EA	FLOOR STOP	FS441/442 AS REQUIRED	626	IVE
1	SET	PERIMETER SEALS	328AA HEAD AND JAMBS	AL	ZER
1	EA	AUTO DOOR BOTTOM	355A	AL	ZER
1	EA	THRESHOLD	AS DETAILED	AL	ZER

SALTO PANIC DEVICE TRIM SPECIFIED COMPLETE WITH ALL COMPONENTS AND INSTALLATION IN SECTION 28

HW SET: 910

6	EA	HINGE	3CB1 4.5 X 4.5	652	IVE
2	EA	EXIT DEVICE	AX-25-C-EO-LBR	626	FAL
1	EA	SURFACE CLOSER	SC61 RW/PA	689	FAL
1	EA	SURFACE CLOSER	SC81 SS/HO	689	FAL
2	EA	KICK PLATE	8400 10" X 2" LDW	630	IVE
1	EA	DOME STOP	FS436/438 AS REQ'D	626	IVE
1	SET	PERIMETER SEALS	188 HEAD AND JAMBS	BRN	ZER
2	EA	AUTO DOOR BOTTOM	355A	AL	ZER

1	EA	THRESHOLD	AS DETAILED	AL	ZER

INSTALL HOLD OPEN ON OUTSWING LEAF TO TERRACE

HW SET: 911

6	EA	POCKET PIVOT	91105F	630	IVE
2	EA	FIRE EXIT HARDWARE	AX-F-25-C-EO-LBR	626	FAL
2	EA	SURFACE CLOSER	SC61 RW/PA	689	FAL
2	EA	KICK PLATE	8400 10" X 2" LDW	630	IVE
2	EA	DOME STOP	FS436/438 AS REQ'D	626	IVE
2	EA	MAGNETIC HOLD-OPEN	SEM SERIES	AL	LCN
1	SET	PERIMETER SEALS	188 HEAD AND JAMBS	BRN	ZER
1	EA	ASTRAGAL	44STST X 188	600	ZER
1	EA	THRESHOLD	AS DETAILED	AL	ZER

HW SET: 915

6	EA	POCKET PIVOT	91105F	630	IVE
2	EA	FIRE EXIT DEVICE	AX-9447EO-F-LBR	626	VON
2	EA	SURFACE CLOSER	SC61 RW/PA	689	FAL
2	EA	KICK PLATE	8400 10" X 2" LDW	630	IVE
2	EA	DOME STOP	FS436/438 AS REQ'D	626	IVE
2	EA	MAGNETIC HOLD-OPEN	SEM SERIES	AL	LCN
1	SET	PERIMETER SEALS	188 HEAD AND JAMBS	BRN	ZER
1	EA	ASTRAGAL	44STST X 188	600	ZER

HW SET: 970

			ALL HARDWARE BY GATE MANUFACTURER		B/O

HW SET: 971

1	EA	PANIC HARDWARE	AX-25-R-L-LON	626	FAL
1	EA	IC RIM CYLINDER	951	626	FAL
			BALANCE OF HARDWARE BY GATE MANUFACTURER		B/O

HW SET: A172

1	EA	PIVOT SET	7215	626	IVE
1	EA	INTERMEDIATE PIVOT	7215 INT	626	IVE
1	EA	ELECTRIC LOCK	IN SECTION 28	626	SAL

1	EA	CYLINDER	AS REQ'D	626	FAL
1	EA	SURFACE CLOSER	SC61 RW/PA	689	FAL
1	EA	MOUNTING PLATE	SC60-18	689	FAL
1	EA	DOME STOP	FS436/438 AS REQ'D	626	IVE

DOORS MUST BE WIDE STILE TO MOUNT LOCK
SEALS AND SWEEPS BY DOOR MANUFACTURER
SALTO LOCK SPECIFIED COMPLETE WITH ALL COMPONENTS AND INSTALLATION IN SECTION 28

HW SET: A372

2	EA	PIVOT SET	7215	626	IVE
2	EA	INTERMEDIATE PIVOT	7215 INT	626	IVE
1	SET	AUTO FLUSH BOLT	FB31/41 AS REQ'D	626	IVE
1	EA	DUST PROOF STRIKE	DP1/2 AS REQ'D	626	IVE
1	EA	ELECTRIC LOCK	IN SECTION 28	626	SAL
1	EA	CYLINDER	AS REQ'D	626	FAL
1	EA	COORDINATOR	COR2-COMPLETE	628	IVE
2	EA	SURFACE CLOSER	SC61 RW/PA	689	FAL
2	EA	MOUNTING PLATE	SC60-18	689	FAL
2	EA	DOME STOP	FS436/438 AS REQ'D	626	IVE

SEALS AND SWEEPS BY DOOR MANUFACTURER
DOORS MUST BE WIDE STILE TO MOUNT HARDWARE
SALTO LOCK SPECIFIED COMPLETE WITH ALL COMPONENTS AND INSTALLATION IN SECTION 28

HW SET: A392C.1

2	EA	PIVOT SET	7215	626	IVE
2	EA	INTERMEDIATE PIVOT	7215 INT	626	IVE
2	EA	FIRE EXIT HARDWARE	AX-F-25-C-EO-LBR	626	FAL
2	EA	ELEC PANIC DEVICE TRIM	IN SECTION 28	626	SAL
2	EA	CYLINDER	AS REQ'D	626	FAL
2	EA	SURFACE CLOSER	SC61 RW/PA	689	FAL
2	EA	MOUNTING PLATE	SC60-18	689	FAL
2	EA	DOME STOP	FS436/438 AS REQ'D	626	IVE

SEALS AND SWEEPS BY DOOR MANUFACTURER
SALTO PANIC DEVICE TRIM SPECIFIED COMPLETE WITH ALL COMPONENTS AND INSTALLATION IN SECTION 28

HW SET: A475

1	EA	PIVOT SET	7215	626	IVE
1	EA	INTERMEDIATE PIVOT	7215 INT	626	IVE
1	EA	ELECTRIC LOCK	IN SECTION 28	626	SAL
1	EA	CYLINDER	AS REQ'D	626	FAL
1	EA	SURFACE CLOSER	SC81 RW/PA	689	FAL
1	EA	MOUNTING PLATE	SC80-18PA	689	FAL
1	EA	DOME STOP	FS436/438 AS REQ'D	626	IVE

DOORS MUST BE WIDE STILE TO MOUNT LOCK
SEALS AND SWEEPS BY DOOR MANUFACTURER
SALTO LOCK SPECIFIED COMPLETE WITH ALL COMPONENTS AND INSTALLATION IN SECTION 28

HW SET: A582R.7

2	EA	PIVOT SET	7215	626	IVE
2	EA	INTERMEDIATE PIVOT	7215 INT	626	IVE
2	EA	PANIC HARDWARE	AX-25-R-L-LON	626	FAL
2	EA	IC RIM CYLINDER	951	626	FAL
2	EA	CLOSER	SC81 HD	689	FAL
2	EA	MOUNTING PLATE	SC80-18PA	689	FAL
2	EA	FLOOR STOP	FS441/442 AS REQUIRED	626	IVE
1	EA	THRESHOLD	AS DETAILED	AL	ZER

SEALS AND SWEEPS BY DOOR MANUFACTURER
DOORS MUST BE WIDE STILE TO MOUNT PANIC HARDWARE

HW SET: A592R.7

2	EA	PIVOT SET	7215	626	IVE
2	EA	INTERMEDIATE PIVOT	7215 INT	626	IVE
2	EA	FIRE EXIT HARDWARE	AX-25-R-EO	626	FAL
2	EA	ELEC PANIC DEVICE TRIM	IN SECTION 28	626	SAL
2	EA	CYLINDER	AS REQ'D	626	FAL
2	EA	CLOSER	SC81 HD	689	FAL
2	EA	MOUNTING PLATE	SC80-18PA	689	FAL
2	EA	FLOOR STOP	FS441/442 AS REQUIRED	626	IVE
1	EA	THRESHOLD	AS DETAILED	AL	ZER

SEALS AND SWEEPS BY DOOR MANUFACTURER
DOORS MUST BE WIDE STILE TO MOUNT PANIC HARDWARE
SALTO PANIC DEVICE TRIM SPECIFIED COMPLETE WITH ALL COMPONENTS AND INSTALLATION IN SECTION 28

HW SET: U01

3	EA	HINGE	3CB1 4.5 X 4.5	652	IVE
1	EA	ELECTRIC LOCK	IN SECTION 28	626	SAL
1	EA	CYLINDER	AS REQ'D	626	FAL
1	EA	CLOSER	1461 FC	689	LCN
1	EA	DOME STOP	FS436/438 AS REQ'D	626	IVE
1	SET	PERIMETER SEALS	188 HEAD AND JAMBS	BRN	ZER
1	EA	DOOR SWEEP	52A	AL	ZER
1	EA	THRESHOLD	BY OTHERS	AL	ZER
1	EA	VIEWER	U701	626	IVE

SALTO LOCK SPECIFIED COMPLETE WITH ALL COMPONENTS AND INSTALLATION IN SECTION 28
INSTALL 2 VIEWERS IN HANDICAPPED ROOMS

HW SET: U03

3	EA	HINGE	3PB1-RC 3.5 X 3.5	652	IVE
1	EA	LATCH	W101 LAT	626	FAL
1	EA	WALL STOP	WS401CCV	626	IVE

AT CONDITIONS WHERE A WALL STOP CANNOT BE USED, PROVIDE GLY 450S OVERHEAD STOP

HW SET: U03.1

3	EA	HINGE	3PB1-RC 3.5 X 3.5	652	IVE
1	EA	LATCH	W101 LAT	626	FAL
1	EA	OVERHEAD HOLDER	450H	630	GLY

HW SET: U04

3	EA	HINGE	3PB1-RC 3.5 X 3.5	652	IVE
1	EA	PRIVACY	W301 LAT	626	FAL
1	EA	WALL STOP	WS401CCV	626	IVE

AT CONDITIONS WHERE A WALL STOP CANNOT BE USED, PROVIDE GLY 450S OVERHEAD STOP

HW SET: U07

6	EA	HINGE	3PB1-RC 3.5 X 3.5	652	IVE
1	EA	DUMMY LEVER	W12 LAT	626	FAL
2	EA	ROLLER LATCH	RL30	626	IVE
2	EA	OVERHEAD STOP	450S	630	GLY

HW SET: U11

1	SET	BP TRACK AND HDWE	138F (RES 1 3/8" DRS)		JOH

HW SET: U15

1	EA	POCKET DR FRAME	TYPE C (EACH 2-0 TO 3-0 & 6-8 TO 7-0)		KNC
1	EA	PRIVACY	2001 ADAP-5	626	ACC

CONFIGURE AND MOUNT A STOP IN THE POCKET DOOR FRAME TO HOLD DOOR PARTIALLY OPEN TO ALLOW FOR HANDLE CLEARANCE FROM THE FRAME.

END OF SECTION

SECTION 08 71 01
DOOR SCHEDULE

Door Numbers	HwSet#
100A	01
100B	02
101A	03
101B	20
102	05
103	05
104	06
105	07
107	08
108	09
109	09
112	10
113	18
114	11
115	11
116	12
117	12
122	13
123	13
125	14
126	19
150A	15
150B	15
151	15
152	15
153	15
200	16
201	16
202	17
203	16
204	11

END OF SECTION

Catalog Cuts

For

Granada Hills Pool And Bathhouse Replacement Project

Sorted By DHI Sequence

Prepared By

David Harder

Created On 11/17/2020

Table of Contents

Mfr	Catalog Number	Description	ItemID	Page #
IVE	700	CONT. HINGE		4
IVE	112XY	CONT. HINGE		5
STA	BB852	HINGE		NA
IVE	3CB1 4.5 X 4.5	HINGE		6
IVE	3CB1 4.5 X 4.5 NRP	HINGE		6
IVE	3CB1HW 4.5 X 4.5	HINGE		6
IVE	3CB1HW 4.5 X 4.5 NRP	HINGE		6
B/O	LOCKING CANE BOLT BY GATE MANUFACTURER/SUPPLIER	CANE BOLT		NA
IVE	FB51T	CONST LATCHING BOLT		8
SCH	L463T XB11-720	CLASSROOM DEAD LOCK		9
SCH	L9050T 06A L583-363	OFFICE/ENTRY LOCK		9
SCH	L9070T 06A	CLASSROOM LOCK		9
SCH	L9080T 06A	STOREROOM LOCK		9
SCH	L9453T 06A L583-363	ENTRANCE W/DEADBOLT		9
SCH	L9456T 06A L583-363 L283-722	PRIVACY INDICATOR LOCK		9
SCH	L9480T 06A L583-363	STOREROOM W/DEADBOLT		9
SCH	KS43F3200	PADLOCK L/CYL-FSIC		NA
VON	CDSI-AX-98-DT	PANIC HARDWARE		34
VON	CDSI-AX-98-DT-WH	PANIC HARDWARE		34
VON	CDSI-AX-98-NL	PANIC HARDWARE		34
VON	CDSI-AX-98-NL-WH	PANIC HARDWARE		34
SCH	20-057 ICX	RIM CYLINDER		50
SCH	20-061 ICX XQ11-948 36-083	MORTISE CYLINDER		51
SCH	30-120	FSIC CORE		NA
SCH	23-030 EV29 S	FSIC CORE		51
VON	6211 FSE CON 12/16/24/28 VAC/VDC	ELECTRIC STRIKE		55
IVE	LG12	LOCK GUARD		63
KEE	K-BXED-V990NL-2	WELD-IN LOCK BX		NA
KEE	K-BXMOR1	WELD-IN LOCK BX		NA
IVE	8200 6" X 16" CFC	PUSH PLATE		65
IVE	8302 10" 6" X 16" CFT	PULL PLATE		66
IVE	COR X FL	COORDINATOR		67
IVE	MB1/MB2 AS REQ'D	MOUNTING BRACKET		67
GLY	100S ADJ	OH STOP		72
LCN	4011	SURFACE CLOSER		76
LCN	4011 DEL	SURFACE CLOSER		76
LCN	4011 H	SURFACE CLOSER		76
LCN	4011 SRI	SURFACE CLOSER		76
LCN	4011 ST-1544	SURFACE CLOSER		76
LCN	4111 AVB EDA	SURFACE CLOSER		82

Mfr	Catalog Number	Description	ItemID	Page #
LCN	4111 AVB SCUSH SRI	SURFACE CLOSER		82
LCN	4111 AVB SHCUSH SRI	SURFACE CLOSER		82
LCN	4111 HEDA	SURFACE CLOSER		82
LCN	4010-18 SRI	MOUNTING PLATE		NA
LCN	4020-18	MOUNTING PLATE		NA
LCN	4110-18 SRI	MOUNTING PLATE		NA
LCN	4110-419 SRI	PA FLUSHTRANSOM BRKT		NA
IVE	8400 10" X 1" LDW B-CS	KICK PLATE		88
IVE	8400 10" X 2" LDW B-CS	KICK PLATE		88
IVE	8400 4" X 1" LDW B-CS	MOP PLATE		88
IVE	FS18L/FS18S AS REQ'D	FLOOR STOP		90
IVE	WS406/407CCV	WALL STOP		91
IVE	WS45X	WALL STOP/HOLDER		92
IVE	FS436/FS438 AS REQ'D	FLOOR STOP		93
ZER	188SBK PSA	GASKETING		94
ZER	429AA-S	GASKETING		95
ZER	339WAA	DOOR SWEEP		96
ZER	39A	DOOR SWEEP		97
ZER	43STST	ASTRAGAL		98
ZER	547A-223 OR AS DETAILED	THRESHOLD		99
SCH	CON X LENGTH AS REQ'D	WIRE HARNESS		NA
SCE	7764	DOOR CONTACT		100
SCE	660-PB	DESK MOUNT BUTTON		102
VON	PS902 900-4R 900-BBK 120/240 VAC	POWER SUPPLY		104
VON	PROVIDE FACTORY POINT TO POINT WIRING DIAGRAM	DIAGRAM		NA
B/O	REMAINDER OF HARDWARE BY GATE MANUFACTURER/SUPPLIER	NOTE		NA
	WEATHERSTRIP BY DOOR/FRAME MANUFACTURER			NA



600
700 Full Mortise Pin and Barrel Continuous Hinge

For Doors Weighing up to 600 pounds
- Non Handed
- 1/8" Inset
- 48" Maximum Door Width
- Non Handed
- Bevel or Square Edge Door

Standard lengths 83", 85", 95", 120"
Standard Mounting Hardware
#10 X 1/2" Self Drilling Self Tapping Screws,
#10 X 1" Wood Screws
Optional SEC - Security Fasteners Available

Material
600- 1012 Cold-Rolled Steel
700- 14 Gauge Type 304 Stainless Steel
1/4" Diameter 304 Stainless Pin with
Nylon Split Bearing

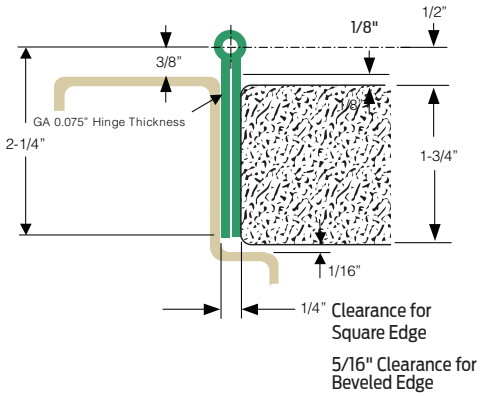

Finishes	600	700
BHMA	600	630
US Numbers	USP	US32D

Custom Paint Available, on 600 consult factory.



602
702 Full Surface Pin and Barrel Continuous Hinge

For Doors Weighing up to 600 pounds
- Non Handed
- Flush Mounted, No Inset
- 48" Maximum Door Width
- Bevel or Square Edge Door

Standard lengths 83", 85", 95", 120"
Standard Mounting Hardware
1/4"-20 x 3/4" Self Drilling Self Tapping Screws,
Cover Clips
Optional SEC - Security Fasteners Available

Material
602- 1012 Cold-Rolled Steel
702 - 14 Gauge Type 304 Stainless Steel
1/4" Diameter 304 Stainless Pin with
Nylon Split Bearing
Brushed Aluminum Leaf Covers

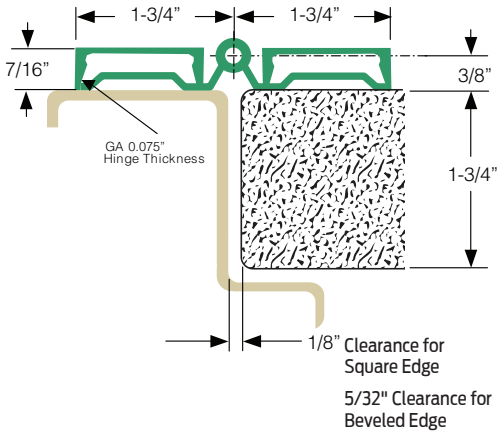

Finishes	602	702
BHMA	600	630
US Numbers	USP	US32D

Custom Paint Available, on 602 consult factory



112XY Full Mortise - Narrow Frame and Door Leaf

UL10C certified
Meets ANSI 156.26 for 150 lbs and 300 lbs.

- For 1 3/4" Doors
- Patented center loaded, interlocking bearing design
- Non Handed for custom cut lengths
- Flush Mounted, No inset
- 48" Maximum Door Width
- Beveled or Square Edge Doors
- Frame guidance lip is extended further for retrofit applications to cover existing heavy weight architectural hinge preps
- For doors weighing up to 450 pounds without reinforcing, 600 pounds with reinforcing
- For lead-lined application consult factory for engineering specials

Standard lengths 83", 85", 95", 119"

Standard Mounting Hardware

12-24 x 3/4" Steel Self Drilling / Self Tapping Phillips Head Screw

Finishes

Clear Anodized (US28), Dark Bronze Anodized (313AN)
Custom Anodizing and Painting are available, consult factory

Options:

HT	Hospital Tip
EPT	Electric Power Transfer
TWP CON	Electrical Through Wire Panel with Allegion Connect

Optional Mounting Hardware:

TEK/WD	1/2 Self Drill, Self Tap 1/2 Wood
WD	Wood Door and Frame

Available Accessory Kits:

Security Screws - Hollow Metal
Security Screws - Wood
Thread Forming Screws

For Single Door Applications

For pairs of doors see chart and general information

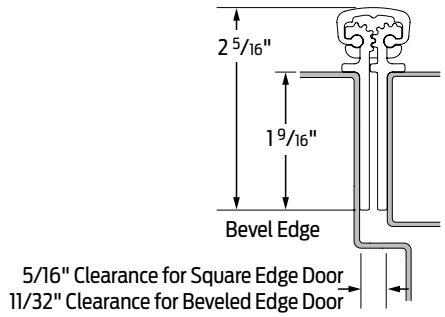



Meets ANSI/BHMA A156.1
A8133 – Steel
A5133 – Stainless Steel
A2133 – Brass

3PB1 3 Knuckle, Plain Bearing Full Mortise Hinge

- For standard weight doors
- Low frequency usage
- Packed with wood and metal screws

Not for use with a door closer.

Options

- NRP, Non-Removable Pin
- SH, Security Stud
- HT, Hospital Tip
- RC, Round Corners - 1/4" or 5/8" Radius
- SEC, Security Fasteners - Pin-in-Socket

Dimensions

Size (Inches)	Size (mm)	Gauge
3.5 x 3.5	90 x 90	0.134
4 x 4	102 x 102	0.134
4.5 x 4	114 x 102	0.134
4.5 x 4.5	114 x 114	0.134
5 x 4.5	127 x 114	0.134



Meets ANSI/BHMA A156.1
A8112 – Steel
A5112 – Stainless Steel
A2112 – Brass

3CB1 3 Knuckle, Concealed Bearing Full Mortise Hinge

- For standard weight doors
- Medium frequency usage
- Packed with wood and metal screws

Options

- NRP, Non-Removable Pin
- SH, Security stud
- HT, Hospital Tip
- RC, Round Corners - 1/4" or 5/8" Radius
- SEC, Security Fastners - Pin-in-Socket

Dimensions

Size (Inches)	Size (mm)	Gauge
3.5 x 3.5	90 x 90	0.134
4 x 4	102 x 102	0.134
4.5 x 4	114 x 102	0.134
4.5 x 4.5	114 x 114	0.134
5 x 4.5	127 x 114	0.134

Finishes *brass*

Ives Finish	US3	US4	US10	US10B	US10A	US11	US15	US26	US26D
BHMA	605	606	612	613	614	616	619	625	626

Finishes *steel*

Ives Finish	USP	US3	US4	US10	US10B	US10A	US11	US15	US26	US26D
BHMA	600	632	633	639	640	641	643	646	651	652

Finishes *stainless steel*

Ives Finish	US32	US32D
BHMA	629	630



Meets ANSI/BHMA A156.1
A8112 – Steel
A5112 – Stainless Steel
A2112 – Brass

3CB1HW 3 Knuckle, Concealed Bearing Full Mortise Hinge

- For heavy weight doors
- High frequency usage
- Packed with wood and metal screws

Options

- NRP, Non-Removable Pin
- SH, Security stud
- HT, Hospital Tip
- RC, Round Corners - 1/4" or 5/8" Radius
- SEC, Security Fastners - Pin-in-Socket

Dimensions

Size (Inches)	Size (mm)	Gauge
4.5 x 4	114 x 102	0.180
4.5 x 4.5	114 x 114	0.180
5 x 4.5	127 x 114	0.190
5 x 5	127 x 127	0.190



Meets ANSI/BHMA A156.7
K81071F – Steel
K51071F – Stainless Steel

UL listed for use with fire rated doors

3SP1 3 Knuckle Spring Full Mortise Hinge

- For automatic closing of doors
- Packed with wood and metal screws

Options

- HT, Hospital Tip
- RC, Round Corners - 1/4" or 5/8" Radius
- SEC, Security Fastners - Pin-in-Socket

Dimensions

Size (Inches)	Size (mm)	Gauge
4 x 4	102 x 102	0.134
4.5 x 4	114 x 102	0.134
4.5 x 4.5	114 x 114	0.134

Finishes *brass*

Ives Finish	US3	US4	US10	US10B	US10A	US11	US15	US26	US26D
BHMA	605	606	612	613	614	616	619	625	626

Finishes *steel*

Ives Finish	USP	US3	US4	US10	US10B	US10A	US11	US15	US26	US26D
BHMA	600	632	633	639	640	641	643	646	651	652

Finishes *stainless steel*

Ives Finish	US32	US32D
BHMA	629	630



Meets ANSI A156.3 Type 27.
UL Listed 3 Hour Fire Doors 8'0" x 10'0"

FB51P Top and Bottom Bolts (Pair)

- Constant Latching—inactive door remains latched until the active door is opened, releasing the automatic bottom bolt and then the top bolt can be manually released. Inactive door will relatch automatically when closed.
- Low Actuation Forces.
- Fits standard ANSI A115.4 Door and Frame Preparations.
- Non-handed.
- 3/4" bolt throw with a 7/8" vertical adjustment.
- 3/4" backset
- Standard Rod Length is 12", which is measured from the center of the flush bolt body to the bolt tip. Optional rod lengths available for top bolt only on non-fire rated openings—18", 24", 36" and 48".

DP1 or DP2 optional dust proof strike available, see page C11.

FB51T Top Bolt Only



Meets ANSI A156.3 Type 27.
UL Listed 3 Hour Fire Doors 8'0" x 10'0"

FB52 Top Bolt with Auxiliary Fire Latch

- FB52 Model with Auxiliary Fire Latch eliminates the bottom bolt and is UL Listed for Fire Doors.

FB53 Top Bolt with Auxiliary Fire Latch & Retrofit Plate

- FB53 Model with Auxiliary Fire Latch eliminates the bottom bolt and includes a retrofit plate to cover existing bottom bolt prep. UL Listed for Fire Doors.

Dimensions

Body Size: 1" Wide x 6-3/4" Long x 2" Deep

Guide Size: 1" Wide x 1-27/32" Long x 11/16" High x 3/32" Thick

Strike Size: 15/16" Wide x 2-1/4" Long x 1/16" Thick

Rub Plate Size: 1-1/4" Wide x 1-11/16" Long x 3/64" Thick

Auxiliary Fire Latch Size: 1" Wide x 1-3/4" Long x 3-1/4" Deep

Retrofit Plate Size: 1" Wide x 6-3/4" Long x 3/32" Thick

Finishes

Ives Number	US3	US4	US10	US10B	US32	US32D
BHMA	605	606	612	613	629	630

SCHLAGE

Grade 1, mortise locks

L Series



Overview

The Schlage® L Series has long been the benchmark for Grade 1 mortise locks. Beyond strength and security – it offers flexibility to meet most needs. Fifty mechanical functions include ten that can be field configured from one universal lock case and ten electrified functions are regularly used as part of electronic access control systems. L Series locks have the ability to suite across electronic, tubular, exit trim, and multi-point locks to integrate seamlessly into any environment. The series features an array of security options including 180-degree visibility status indicators and support for multiple keyway families and cylinder types including Primus® XP high-security cylinders.

Finishes



605
Bright Brass



606
Satin Brass

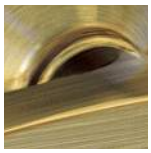

609
Antique Brass



612 [1]
Satin Bronze



613 [1]
Oil Rubbed Bronze

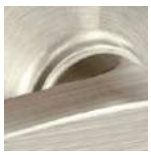

619
Satin Nickel



622
Matte Black



625
Bright Chrome

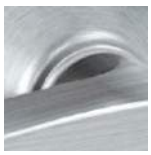

626
Satin Chrome

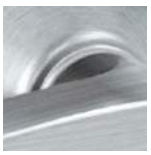

626AM
Satin Chrome, Antimicrobial



629 [2]
Bright Stainless



630 [2]
Satin Stainless



630AM [2]
Satin Stainless, Antimicrobial



643e
Aged Bronze

[1] Available on standard levers only, not available on Latitude, Longitude, Accent, Asti, or Merano

[2] Not available on Accent, Asti, or Merano

ALLEGION

M Collection decorative lever styles[1]



M51
851 - Knurled tactile warning



M52
852 - Knurled tactile warning



M53



M54



M55



M56



M57[2]



M61
- Handed



M62[2]
- Handed



M63
- Handed

Dimensions

Lever	Width	Projection
M51	4.5"	3.2"
M52	4.5"	3"
M53	4.35"	3.2"
M54	4.35"	2.75"
M55	4.3"	3"
M56	4.6"	3"
M57	4.5"	2.9"
M61	4.5"	3.2"
M62	4.5"	2.7"
M63	4.5"	3.2"

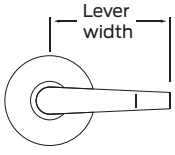

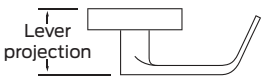

[1] M Collection not available in 612 and 613 finishes.
[2] Available in 629, 630, and 630AM only.

M Collection decorative lever styles[1]



M81
881 - Knurled tactile warning



M82



M83



M84



M85
- Handed



ME1
8ME1 - Milled tactile warning
- Handed



ME2
8ME2 - Milled tactile warning
- Handed



ME3
8ME3 - Milled tactile warning

Dimensions

Lever	Width	Projection
M81	4.8"	2.9"
M82	4.8"	2.9"
M83	4.6"	2.9"
M84	5.1"	3"
M85	4.9"	3.3"
ME1	5.5"	3"
ME2	5.2"	2.8"
ME3	5.1"	3.2"

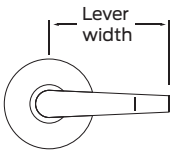

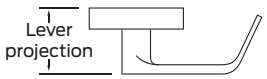

Return to door meets 1/2" requirement for all levers shown on this page.

ME1, ME2 and ME3 ergonomic levers designed with Gensler as product design consultant.

Standard lever and knob styles



01
801 - Milled tactile warning



02
802 - Knurled tactile warning



03
803 - Knurled tactile warning



05
805 - Milled tactile warning



06
806 - Milled tactile warning



07
807 - Milled tactile warning



12
812 - Milled tactile warning
- Handed



17
817 - Milled tactile warning



18
818 - Milled tactile warning



Accent (ACC)[1]
- Handed

Dimensions

Lever	Width	Projection
01	3.875"	2.688"
02	4.75"	2.813"
03	4.75"	2.813"
05	3.75"	2.875"
06	4.625"	2.5"
07	4.625"	2.875"
12	4.625"	3.063"
17	4.75"	3"
18	4.875"	2.688"
Accent (ACC)	4.125"	3.125"

Return to door meets 1/2" requirement for 03, 06 and 17 levers.

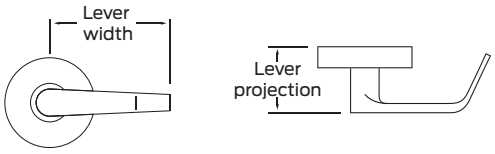

[1] Not available in 612, 613, 629, or 630 finishes.

Standard lever and knob styles



Asti (AST)[1]
- Handed



Latitude (LAT)[2]



Longitude (LON)[2]



Merano (MER)[1]
- Handed



Omega (OME)



41



42

Dimensions

Lever	Width	Projection
Asti (AST)	4"	2.625"
Latitude (LAT)	4.75"	2.563"
Longitude (LON)	4.875"	2.563"
Merano (MER)	4"	3.125"
Omega (OME)	5.063"	3.313"
41	2.211"	2.34"
42	2.132"	2.538"

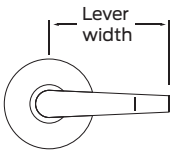

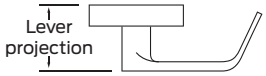

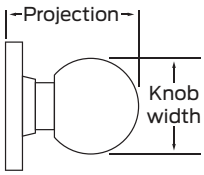

Return to door meets ½" requirement for Longitude and Omega levers.

[1] Not available in 612, 613, 629, or 630 finishes.
[2] Not available in 612 or 613 finishes.

Escutcheons



L full face
Specify by adding 'L' after lever design.



L concealed
Specify by adding 'C' suffix to function and by adding 'L' after lever design.



N full face
Specify by adding 'N' after lever design.

Roses



A rose
Available for use on L Series knob and lever designs. Specify by adding 'A' after lever design
Finishes: available in all L Series finishes.



B rose
Available for use on L Series knob and lever designs. Specify by adding 'B' after lever design.
Finishes: available in all L Series finishes.

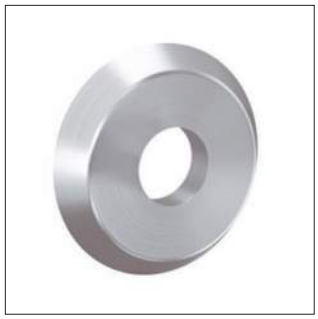

C rose
Available for use on L Series knob and lever designs. Specify by adding 'C' after lever design.
Finishes: 605, 606, 609, 619, 622, 625, 626, 629, 630, 643e



AVA rose
Available for use on ACC lever, other levers upon request.
Finishes: 605, 606, 609, 619, 622, 625, 626, 643e



MER rose
Available for use on MER lever, other levers upon request.
Finishes: 605, 606, 609, 619, 622, 625, 626, 643e

Dimensions

Rose	Diameter
A	2.125"
B	2.5625"
C	2.625"
AVA	2.625"
MER	2.625"

Escutcheon	Width	Height
L full face	1.75"	8"
L concealed	1.75"	8"
N full face	2.5"	7.875"

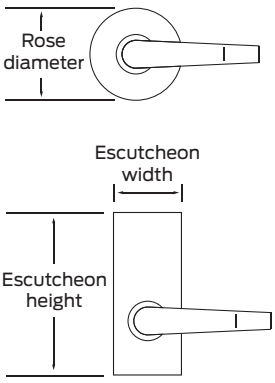

Thumbturns



Standard turn
09-509



ADA turn
09-509 x L583-363
Not available with L9463 and L463

Indicators



Cylinder



Thumbturn



Cointurn



Emergency key indicator



Cylinder



Thumbturn



Cointurn



Emergency key indicator

	Locked Unlocked	Occupied Unoccupied	Do Not Disturb	
Inside trim	L283-711	L283-712	L283-713	L283-714
Outside trim	L283-721	L283-722	L283-723	L283-724

Ligature resistant solutions



SL1 [1, 2]



SK1 [1,2]



HSLR [2,3]
- Handed

Specifications and certifications

	SL1	SK1	HSLR
Accepted by OHM	■	■	■
ADA compliant	■	-	■
Suitable for:			
High risk areas	-	■	■
Medium risk areas	■	■	■
Low risk areas	■	■	■

Caution: Cone shaped door knobs and thumbturns do not compliant with ADA requirements for graspability.

Dimensions

	Width	Height	Projection
SL1	4.5"		3.13"
SK1	3.125"		2.3125"
HSLR	6"	13.17"	2.27"

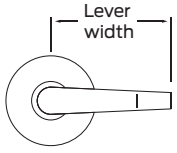

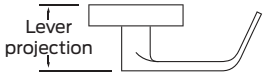

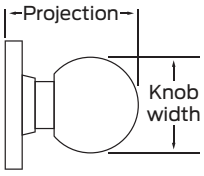

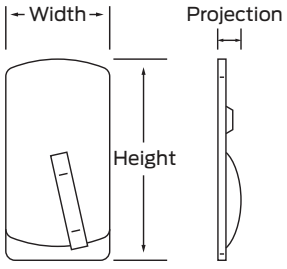

[1] Only available in 630 and 630AM finishes.
[2] Not available with Vandlgard option.
[3] Only available in 630 finish.





Vandlgard® protection available on functions noted with an “LV” option.

Vandlgard allows the outside lever to rotate freely down when locked to limit the ability of vandals to apply excessive force to the chassis helping to prevent damage to internal components.

Non-keyed functions

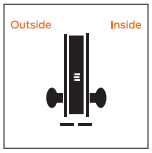

Schlage L9010
ANSI F01

Passage latch

- Latchbolt retracted by lever/knob from either side at all times
- Inside lever always free for immediate egress



Optional HSLR trim available

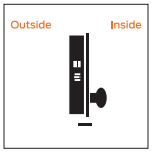

Schlage L9025
ANSI F31

Exit lock

- No outside trim
- Inside lever always free for immediate egress

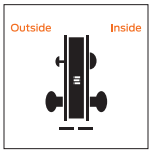

Schlage L9040
LV9040
ANSI F22

Bath/bedroom privacy lock

- Latchbolt retracted by lever/knob from either side unless outside lever is locked by inside thumbturn
- Actuating inside lever or closing door unlocks outside lever
- To unlock from outside remove emergency button, insert emergency thumbturn in access hole and rotate
- Inside knob/lever is always free for immediate egress



Optional 180 degree messaging indicator available

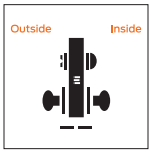

Schlage L9044
LV9044
ANSI -

Privacy with coin turn outside

- Latchbolt retracted by lever/knob from either side unless outside lever is locked by inside thumbturn or outside coin turn
- Actuating inside lever, closing door, or rotating outside coin turn unlocks outside lever
- Available in rose trim only



Coin turn for lock with rose trim



Optional 180 degree messaging indicator available



Optional HSLR trim available

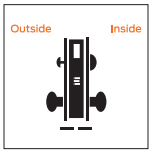

Schlage L9440
LV9440
ANSI F19

Privacy with deadbolt

- Latchbolt retracted by lever/knob from either side
- Deadbolt actuated by inside thumbturn
- Throwing deadbolt locks outside knob/lever
- Inside lever retracts both deadbolt and latchbolt and unlocks outside lever
- To unlock from outside remove emergency button, insert emergency thumbturn in access hole and rotate
- Inside lever always free for immediate egress



Optional 180 degree messaging indicator available

Cylinder · Knob/lever · Thumbturn · Thumbturn cylinder · Coin turn · Solid spindle · Two-piece spindle · Emergency thumbturn · Electrified function

ALLEGION

Non-keyed functions

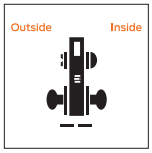

Schlage **L9444**
LV9444
ANSI **-**

Privacy with deadbolt and coin turn outside

- Latchbolt retracted by knob/lever from either side
- Deadbolt actuated by inside thumbturn or outside coin turn
- Throwing deadbolt locks outside knob/lever
- Inside lever retracts both deadbolt and latchbolt and unlocks outside lever
- Rotating coin turn retracts deadbolt and unlocks outside lever
- Inside lever always free for immediate egress
- Available with rose trim only



Coin turn for lock with rose trim



Optional 180 degree messaging indicator available



Optional HSLR trim available

Non-keyed dummy functions

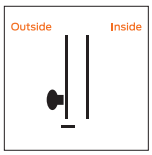

Schlage L0170
ANSI -

Half dummy trim

- Fixed lever/knob on one side

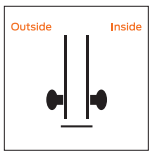

Schlage L0172
ANSI -

Full dummy trim

- Fixed lever/knob on both sides

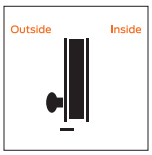

Schlage L9175
ANSI -

Half dummy trim with lock case

- Fixed lever/knob on one side
- Includes lock case and blank armor plate

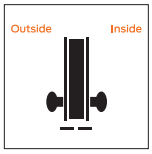

Schlage L9176
ANSI -

Full dummy trim with lock case

- Fixed lever/knob on both sides
- Includes lock case and blank armor plate

In a double-door application where the dummy will be used as the strike order 10-091 armored front strike separately.

Single cylinder non-deadbolt functions

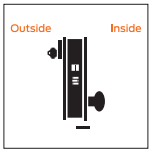

Schlage L9026
ANSI -

Exit lock with cylinder

- No outside trim
- Outside cylinder retracts latchbolt
- Inside lever always free for immediate egress
- Auxiliary latch deadlocks latchbolt when door is locked

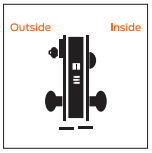

Schlage L9050
LV9050
ANSI F04

Office and inner entry lock

- Latchbolt retracted by knob/lever from either side unless outside is made inoperative by key outside or by turning inside thumbturn
- When outside is locked, latchbolt is retracted by key outside or by knob/lever inside
- Outside knob/lever remains locked until thumbturn is returned to vertical or unlocked by key
- Auxiliary latch deadlocks latchbolt when door is locked
- Inside knob/lever is always free for immediate egress



Optional 180 degree messaging indicator available



Optional HSLR trim available

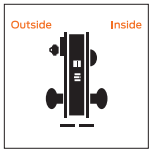

Schlage L9056
LV9056
ANSI -

L9050 with automatic unlocking

- Latchbolt retracted by knob/lever from either side unless outside is made inoperative by key outside or by rotating inside thumbturn
- Outside knob/lever unlocked by key outside, thumbturn or closing door
- Rotating inside knob/lever simultaneously retracts latchbolt and unlocks outside knob/lever
- Auxiliary latch deadlocks latchbolt when door is locked
- Inside knob/lever is always free for immediate egress



Optional 180 degree messaging indicator available



Optional HSLR trim available

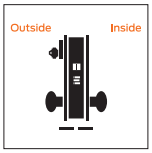

Schlage L9070
LV9070
ANSI F05

Classroom lock

- Latchbolt retracted by lever/knob from either side unless outside lever is locked by key
- Unlocked from outside by key
- Auxiliary latch deadlocks latchbolt when door is locked
- Inside lever always free for immediate egress



Optional 180 degree messaging indicator available



Optional HSLR trim available

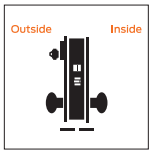

Schlage L9076
LV9076
ANSI F06

Classroom holdback lock

- Latchbolt retracted by lever/knob from either side unless outside lever is locked by key
- When locked, latchbolt retracted by key or inside lever
- Auxiliary latch deadlocks latchbolt when door is locked
- Holdback feature activated by turning inside lever/knob and rotating key 360°
- Inside lever always free for immediate egress

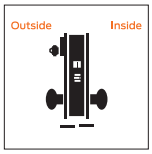

Schlage L9080
LV9080
ANSI F07

Storeroom lock

- Latchbolt retracted by lever/knob inside or key outside
- Outside lever/knob is always inoperable
- Auxiliary latch deadlocks latchbolt when door is locked
- Inside lever always free for immediate egress



Optional HSLR trim available

Cylinder · Knob/lever · Thumbturn · Thumbturn cylinder · Coin turn · Solid spindle · Two-piece spindle · Emergency thumbturn · Electrified function

ALLEGION

Single cylinder deadbolt functions

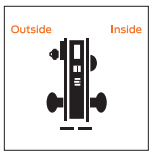

Schlage L9453
LV9453
ANSI F20

Entrance lock

- Latchbolt retracted by lever/knob from either side unless outside locked by 20° thumbturn rotation
- Deadbolt actuation through 90° thumbturn rotation
- When locked, outside key or inside lever/knob retracts both deadbolt and latchbolt
- Outside lever/knob locked until thumbturn is restored to vertical position
- Throwing deadbolt locks outside lever/knob
- Auxiliary latch deadlocks latchbolt when door is locked
- Inside lever always free for immediate egress



Optional HSLR trim available

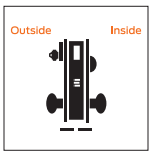

Schlage L9456
LV9456
ANSI F13

Corridor lock

- Latchbolt retracted by lever/knob from either side
- Deadbolt actuation by key or thumbturn rotation
- Throwing deadbolt locks outside lever/knob
- Turning inside knob/lever retracts both deadbolt and latchbolt and unlocks outside lever/knob
- Inside lever always free for immediate egress



Optional HSLR trim available

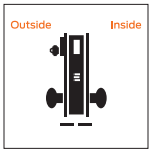

Schlage L9465
ANSI -

Closet/storeroom lock

- Latchbolt retracted by lever/knob from either side
- Deadbolt actuation by key



Optional HSLR trim available

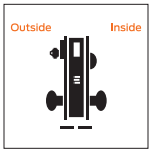

Schlage L9473
ANSI F21

Dormitory/bedroom lock

- Latchbolt retracted by lever/knob from either side
- Deadbolt actuation by outside key or inside thumbturn



Optional 180 degree messaging indicator available



Optional HSLR trim available

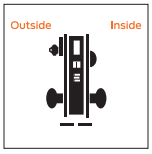

Schlage L9480
LV9480
ANSI -

Storeroom lock with deadbolt

- Latchbolt retracted by outside key or inside knob/lever
- Outside knob/lever always fixed
- Deadbolt actuation by outside key or inside thumbturn
- Inside knob/lever actuation retracts both deadbolt and latchbolt
- Auxiliary latch deadlocks latchbolt when door is locked
- Inside lever always free for immediate egress



Optional 180 degree messaging indicator available



Optional HSLR trim available

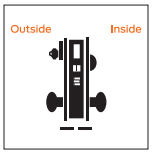

Schlage L9485
LV9485
ANSI -

Faculty/hotel/restroom lock

- Latchbolt retracted by outside key or inside knob/lever
- Outside knob/lever always fixed
- Deadbolt actuation by thumbturn
- All keys (except emergency) inoperative when deadbolt is thrown
- Inside knob/lever retracts both deadbolt and latchbolt
- Auxiliary latch deadlocks latchbolt when door is locked
- Inside lever always free for immediate egress



Optional 180 degree messaging indicator available



Optional HSLR trim available

Cylinder · Knob/lever · Thumbturn · Thumbturn cylinder · Coin turn · Solid spindle · Two-piece spindle · Emergency thumbturn · Electrified function

ALLEGION

Single cylinder deadbolt functions

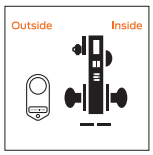

Schlage L9486
LV9486
ANSI F15

L/LV9485 with 09-611 “DO NOT DISTURB” indicator for rose trim

- Latchbolt retracted by outside key or inside knob/lever
- Outside knob/lever always fixed
- Deadbolt actuation by thumbturn
- When deadbolt is thrown “DO NOT DISTURB” message is displayed and all keys (except emergency) become inoperative
- Inside knob/lever retracts both deadbolt and latchbolt
- Auxiliary latch deadlocks latchbolt when door is locked
- Inside lever always free for immediate egress



Adds hotel occupancy indicator (09-611) for lock with A or B roses on sectional trim. Message: “DO NOT DISTURB”.

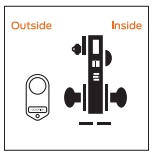

Schlage L9486xL583-375
LV9486xL583-375
ANSI -

L/LV9485 with “OCCUPIED” indicator for rose trim

- Latchbolt retracted by outside key or inside knob/lever
- Outside knob/lever always fixed
- Deadbolt actuation by thumbturn
- When deadbolt is thrown “OCCUPIED” message is displayed and all keys (except emergency) become inoperative
- Inside knob/lever retracts both deadbolt and latchbolt
- Auxiliary latch deadlocks latchbolt when door is locked
- Inside lever always free for immediate egress



Adds hotel occupancy indicator (09-611) for lock with A or B roses on sectional trim. Message: “OCCUPIED”.

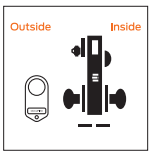

Schlage L9496
ANSI -

Privacy with 09-611 “OCCUPIED” indicator for rose trim

- Latchbolt retracted by knob/lever from either side
- Deadbolt actuation by outside key or inside thumbturn
- Thrown deadbolt displays “OCCUPIED” message and locks outside lever
- Inside knob/lever retracts both deadbolt and latchbolt and unlocks outside lever
- Inside lever always free for immediate egress



Adds hotel occupancy indicator (09-611) for lock with A or B roses on sectional trim. Message: “OCCUPIED”.

Double cylinder non-deadbolt functions

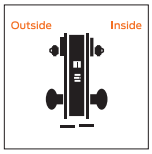

Schlage L9060
LV9060
ANSI F09

Apartment entrance lock

- Latchbolt retracted by knob/lever from either side unless outside is locked by key from inside
- When locked, latchbolt retracted by key outside or knob/lever inside
- Auxiliary latch deadlocks latchbolt when door is locked
- Inside knob/lever is always free for immediate egress



Optional 180 degree messaging indicator available

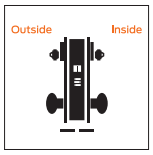

Schlage L9071
LV9071
ANSI F32

Classroom security lock

- Latchbolt retracted by knob/lever from either side unless outside is locked by key from either side
- When locked, latchbolt retracted by outside key or inside knob/lever
- Auxiliary latch deadlocks latchbolt when door is locked
- Inside knob/lever always free for immediate egress



Optional 180 degree messaging indicator available



Optional HSLR trim available

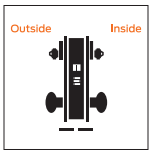

Schlage L9077
LV9077
ANSI -

Classroom security holdback lock

- Latchbolt retracted by knob/lever from either side unless outside is locked by key from either side
- When locked, latchbolt retracted by key outside or knob/lever inside
- Auxiliary latch deadlocks latchbolt when door is locked
- Rotate inside lever/knob and turn key 360º to enable holdback feature
- Inside knob/lever always free for immediate egress



Optional 180 degree messaging indicator available

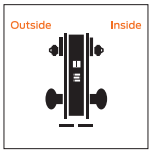

Schlage L9082
LV9082
ANSI F30

Institution lock

- Latchbolt retracted by key from either side
- Knob/lever on both sides always inoperative
- Auxiliary latch deadlocks latchbolt when door is locked

Caution: Double cylinder locks on any door, in any structure requiring use of a key to achieve egress can create a life safety hazard in times of emergency and their use is not recommended. Installation should be in accordance with existing codes only.



Optional 180 degree messaging indicator available



Optional HSLR trim available

Cylinder · Knob/lever · Thumbturn · Thumbturn cylinder · Coin turn · Solid spindle · Two-piece spindle · Emergency thumbturn · Electrified function

Double cylinder deadbolt functions

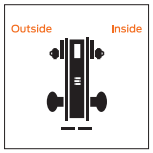

Schlage L9457
LV9457
ANSI F33

Classroom security lock with deadbolt

- Latchbolt retracted by lever/knob from either side
- Deadbolt actuated by either key
- Throwing deadbolt locks outside lever/knob
- Actuating inside lever/knob retracts both deadbolt and latchbolt and unlocks outside lever
- Inside lever always free for immediate egress



Optional HSLR trim available

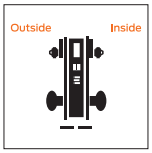

Schlage L9458
LV9458
ANSI F34

Classroom security lock w/deadbolt and auxiliary latch

- Latchbolt retracted by knob/lever from either side
- Deadbolt actuated by either key
- When door is locked outside lever inoperative
- Inside lever retracts deadbolt and latchbolt and unlocks outside lever
- Auxiliary latch deadlocks latchbolt when door is locked
- Inside lever always free for immediate egress

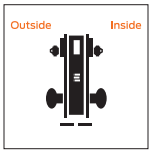

Schlage L9466
ANSI F14

Store/utility room lock with deadbolt

- Latchbolt retracted by knob/lever from either side
- Deadbolt thrown or retracted by key from either side

Caution: Double cylinder locks on any door, in any structure requiring use of a key to achieve egress can create a life safety hazard in times of emergency and their use is not recommended. Installation should be in accordance with existing codes only.



Optional 180 degree messaging indicator available



Optional HSLR trim available

Cylinder · Knob/lever · Thumbturn · Thumbturn cylinder · Coin turn · Solid spindle · Two-piece spindle · Emergency thumbturn · Electrified function

ALLEGION

Mortise deadlock functions

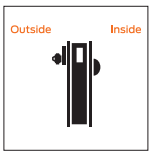

Schlage L9460
ANSI F17

Cylinder x thumbturn lock

- Deadbolt actuated by key or thumbturn



Optional 180 degree messaging indicator available

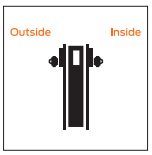

Schlage L9462
ANSI F16

Double cylinder lock

- Deadbolt actuated by either key

Caution: Double cylinder locks on any door, in any structure, requiring the use of a key to achieve egress can create a life safety hazard in times of emergency and their use is not recommended. Installation should be in accordance with existing codes only.



Optional 180 degree messaging indicator available

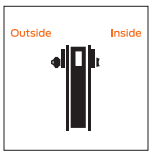

Schlage L9463
ANSI F29

Classroom lock

- Deadbolt actuated by key
- Thumbturn retracts deadbolt but cannot extend it



Optional 180 degree messaging indicator available

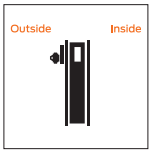

Schlage L9464
ANSI F18

Cylinder lock

- Deadbolt actuated by key
- No trim opposite side



Optional 180 degree messaging indicator available

Cylinder · Knob/lever · Thumbturn · Thumbturn cylinder · Coin turn · Solid spindle · Two-piece spindle · Emergency thumbturn · Electrified function

ALLEGION

Small mortise deadlock functions

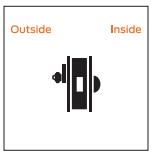

Schlage L460
ANSI E06071

Cylinder x thumbturn lock

- Deadbolt actuated by key or thumbturn



Optional 180 degree messaging indicator available

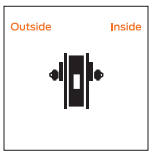

Schlage L462
ANSI E06061

Double cylinder lock

- Deadbolt actuated by either key

Caution: Double cylinder locks on any door, in any structure, requiring use of a key to achieve egress can create a life safety hazard in times of emergency and their use is not recommended. Installation should be in accordance with existing codes only.



Optional 180 degree messaging indicator available

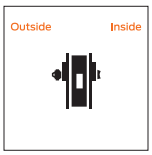

Schlage L463
ANSI E06091

Classroom lock

- Deadbolt actuated by key
- Thumbturn retracts deadbolt but cannot extend it



Optional 180 degree messaging indicator available

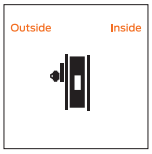

Schlage L464
ANSI E06081

Cylinder lock

- Deadbolt actuated by key
- No trim opposite side



Optional 180 degree messaging indicator available

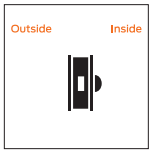

Schlage L480
ANSI -

Door bolt

- Deadbolt actuated by thumbturn
- No trim opposite side



Optional 180 degree messaging indicator available

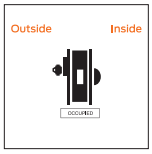

Schlage L496
ANSI -

Deadbolt with "OCCUPIED" indicator

- Deadbolt actuated by key or thumbturn
- When deadbolt is thrown "OCCUPIED" message is displayed



Optional 180 degree messaging indicator available

Cylinder | Knob/lever | Thumbturn | Thumbturn cylinder | Coin turn | Solid spindle | Two-piece spindle | Emergency thumbturn | Electrified function

ALLEGION

Special functions

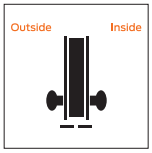

Schlage L9110 x XL11-741
ANSI -

Double dummy with active trim

- Knob/lever both sides active
- Lock case and armor front included
- Can receive deadbolt with XL11-743 armor front

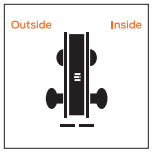

Schlage L0940 x XL11-446
LV9040 x XL11-446
ANSI -

Privacy with turn both sides

- Latchbolt retracted by either lever
- Rotating either thumbturn locks outside lever
- Actuating inside lever, closing door, or rotating either thumbturn unlocks outside lever

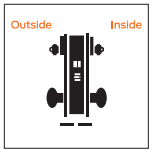

Schlage L9066 x XL11-897
ANSI -

Storeroom lock

- Either key retracts latchbolt
- Either key locks or unlocks both levers

Caution: Double cylinder locks on any door, in any structure requiring use of a key to achieve egress can create a life safety hazard in times of emergency and their use is not recommended. Installation should be in accordance with existing codes only.



Optional 180 degree messaging indicator available

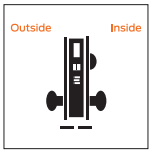

Schlage L9412 x XL11-907
ANSI -

Exit lock with deadbolt

- Latchbolt retracted by inside lever
- Outside lever always fixed
- Thumbturn actuates deadbolt
- Inside lever retracts deadbolt and latchbolt
- Auxiliary latch deadlocks latchbolt when door is locked

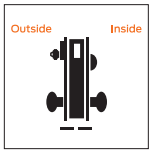

Schlage L9460 x XL11-635
ANSI -

L9460 with fixed dummy trim

- Knob/lever both sides fixed
- Deadbolt thrown or retracted by key outside or thumbturn inside
- Specify per XL11-635



Optional 180 degree messaging indicator available

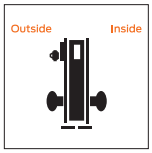

Schlage L9460, L9462, L9464 x XL11-886
ANSI -

Deadbolt with retraction by inside lever or knob

L9460 x XL11-886
- Deadbolt actuation by key or thumbturn
- Outside lever always fixed
- Inside lever active when deadbolt is thrown
- Inside lever retracts deadbolt

L9462 x XL11-886
- Same as L9460 x XL11-886 except deadbolt actuated by key from either side

L9464 x XL11-886
- Same as L9460 x XL11-886 except deadbolt actuated by key from one side



Optional 180 degree messaging indicator available

Cylinder | Knob/lever | Thumbturn | Thumbturn cylinder | Coin turn | Solid spindle | Two-piece spindle | Emergency thumbturn | Electrified function

ALLEGION

Special functions

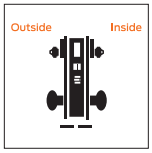

Schlage **L9482 x XL11-543**
LV9482 x XL11-543
ANSI **-**

Institutional lock with deadbolt

- Latchbolt retracted by either key
- Both levers always inoperative
- Deadbolt actuated by either key
- Auxiliary latch deadlocks latchbolt when door is locked

Caution: Double cylinder locks on any door, in any structure requiring use of a key to achieve egress can create a life safety hazard in times of emergency and their use is not recommended. Installation should be in accordance with existing codes only.

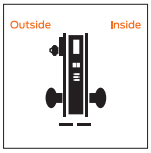

Schlage **L9485 x XL11-557**
ANSI **-**

Prison function lock

- Latchbolt retracted by outside key or inside knob/lever
- Outside knob/lever always free spinning
- Deadbolt actuation by guard key
- Inside knob/lever fixed when deadbolt is thrown
- Prisoner key only retracts latchbolt
- Tamper resistant Torx screws standard

Electrified locks functions

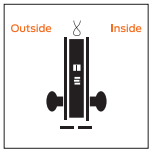

Schlage **L9090EL**
L9090EU
ANSI **F13**

Electrically locking/ unlocking outside lever (no cylinder)

- Outside lever/knob continuously locked (EL) or unlocked (EU) by 12V or 24V DC
- Auxiliary latch deadlocks latchbolt when door is locked
- Inside lever/knob always free for immediate egress

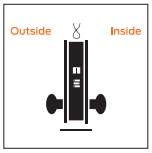

Schlage **L9091EL**
L9091EU
ANSI **-**

Electrically locking/ unlocking both levers (no cylinder)

- Both levers/knobs continuously locked (EL) or unlocked (EU) by 12V or 24V DC
- Auxiliary latch deadlocks latchbolt when door is locked

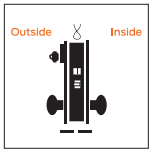

Schlage **L9092EL**
L9092EU
ANSI **-**

Electrically locking/ unlocking outside lever (single cylinder)

- Outside lever/knob continuously locked (EL) or unlocked (EU) by 12V or 24V DC
- Latchbolt retracted by lever/knob inside or key outside
- Auxiliary latch deadlocks latchbolt when door is locked
- Inside lever/knob always free for immediate egress
- EL: Switch or power failure allows outside lever/knob to retract latchbolt
- EU: Switch or power failure locks (EU) outside lever/knob



Optional HSLR trim available

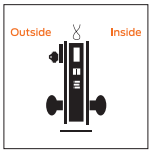

Schlage **L9093EL**
L9093EU
ANSI **-**

Electrically locking/ unlocking both levers (outside cylinder)

- Both levers/knobs continuously locked (EL) or unlocked (EU) by 12V or 24V DC
- Latchbolt retracted by key outside
- Auxiliary latch deadlocks latchbolt when door is locked



Optional HSLR trim available

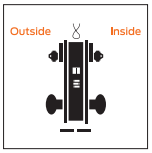

Schlage **L9094EL**
L9094EU
ANSI **-**

Electrically locking/ unlocking outside lever (double cylinder)

- Outside lever/knob continuously locked (EL) or unlocked (EU) by 12V or 24V DC
- Lathbolt retracted by either key or by inside lever/knob
- Auxiliary latch deadlocks latchbolt when door is locked
- Inside lever/knob always free for immediate egress



Optional HSLR trim available

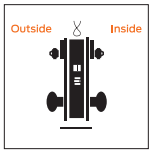

Schlage **L9095EL**
L9095EU
ANSI **-**

Electrically locked or electrically unlocked both levers (double cylinder)

- Both levers/knobs continuously locked (EL) or unlocked (EU) by 12V or 24V DC
- Latchbolt retracted by either key
- Auxiliary latch deadlocks latchbolt when door is locked
- EL: Switch or power failure unlocks both levers/knobs and allows knob/lever to retract latchbolt
- EU: Switch or power failure locks both levers/ knobs



Optional HSLR trim available

Cylinder · Knob/lever · Thumbturn · Thumbturn cylinder · Coin turn · Solid spindle · Two-piece spindle · Emergency thumbturn · Electrified function

ALLEGION

Electrified locks functions

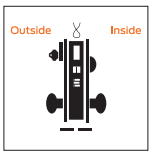

Schlage **L9492EL**
L9492EU
ANSI **-**

Electrically locking/ unlocking outside lever (outside cylinder, inside thumbturn with deadbolt)

- Outside lever continuously locked (EL) or unlocked (EU) 12V or 24V DC
- Deadbolt actuation by key or thumbturn
- Inside lever retracts both deadbolt and latchbolt
- For EU outside lever retracts deadbolt and latchbolt
- Auxiliary latch deadlocks latchbolt when door is locked
- Inside lever always free for immediate egress



Optional HSLR trim available

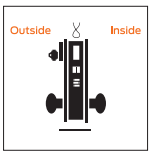

Schlage **L9493EL**
L9493EU
ANSI **-**

Electrically locking/ unlocking both levers (outside cylinder, inside thumbturn with deadbolt)

- Deadbolt actuation by key or thumbturn
- Inside lever retracts both deadbolt and latchbolt
- For EU both levers retract deadbolt and latchbolt
- Auxiliary latch deadlocks latchbolt when door is locked



Optional HSLR trim available

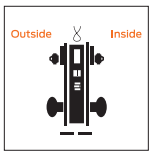

Schlage **L9494EL**
L9494EU
ANSI **-**

Electrically locking/ unlocking outside lever (double cylinder with deadbolt)

- Outside lever continuously locked (EL) or unlocked (EU) 12V or 24V DC
- Deadbolt actuation by either key
- Inside lever retracts both deadbolt and latchbolt
- For EU outside lever retracts deadbolt and latchbolt
- Auxiliary latch deadlocks latchbolt when door is locked
- Inside lever always free for immediate egress

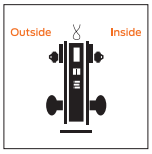

Schlage **L9495EL**
L9495EU
ANSI **-**

Electrically locking/ unlocking both levers (double cylinder with deadbolt)

- Both levers continuously locked (EL) or unlocked (EU) 12V or 24V DC
- Deadbolt actuation by either key
- When unlocked both levers retract deadbolt and open door
- Auxiliary latch deadlocks latchbolt when door is locked

Available electrified options include:

RX Request to Exit

LX Latch bolt monitor

DPS Door Position Switch

DM Deadbolt monitor (DM)

Cylinder · Knob/lever · Thumbturn · Thumbturn cylinder · Coin turn · Solid spindle · Two-piece spindle · Emergency thumbturn · Electrified function

ALLEGION

Cylinders

Conventional mortise cylinder	
P	6-pin Conventional (standard) with Schlage logo
Z	SL 7-pin Conventional (A2 pinning) with Schlage logo
L	Less full face cylinder
C	Concealed mortise cylinder
W	Less concealed mortise cylinder

Full size interchangeable core (FSIC) mortise cylinder	
R	6-pin FSIC with Schlage logo
M	SL 7-pin FSIC (A2 pinning) with Schlage logo
J	Less FSIC
F	6-pin FSIC less Schlage logo
T	Refundable FSIC construction core

Small format interchangeable core (SFIC) mortise cylinder	
G	7-pin SFIC (A2 pinning) with Schlage logo
B	Less core
BDC	Disposable SFIC construction core
H	Refundable SFIC construction core

Specifications

Chassis	
Case material	CRS with zinc dichromate plating
Case size	L9000 Series: 4 7/16" x 6 1/16" x 1"(113 mm x 154 mm x 25 mm) L400 Series: 4 7/16" x 3 5/8" x 1"(113 mm x 92 mm x 25 mm)
Spacing	Knob or lever to cylinder: 3 7/8" (98 mm); Knob or lever to thumbturn hub: 2 11/16" (68 mm)
Door thickness	Standard: 1 3/4" (44 mm) Optional: 1 3/8" (35 mm) to 2 1/2" (64 mm) Over 2 1/2" (64 mm) door ranges vary by function. Specify door thickness if other than 1 3/4" and position in door EE, EI, EO, ED

Trim	
Handing	L9000 Series: Field-reversible without disassembly L400 Series: Non-handed
Lever/knob	Lever designs: forged brass or bronze and cast stainless steel Knob designs: heavy-duty wrought brass, bronze or stainless steel
Rose/ escutcheon	L full face and concealed: Cold-forged brass, bronze and stainless steel N full face: Heavy wrought reinforced brass, bronze and stainless steel Roses: A ,B, C: wrought brass or bronze and stainless steel; AVA and MER: forged brass
Combinations	Available with knob both sides, lever both sides, or knob/lever combinations. Roses cannot be combined with escutcheons.

Latch	
Backset	2 3/4" (70 mm) only
Armor	L9000 Series Standard: 1 1/4" x 8" x 7/32" (32 mm x 203 mm x 6 mm) Optional: 1 1/16" x 8" x 7/32" (27 mm x 203 mm x 6 mm) L400 Series: Standard: 1 1/4" x 5 9/16" x 7/32"(32 mm x 141 mm x 6 mm)
Latch	3/4" (19 mm) throw stainless steel latch with anti-friction tongue
Deadbolt	1" (25 mm) throw stainless steel deadbolt
Strike	L9000 Series Standard: ANSI curved lip strike 1 1/4" x 4 7/8" (32 mm x 124 mm) x 1 3/16" (30 mm) lip to center with dust box Optional: Extended lip strike options (7/8", 1", 1 1/2", 1 3/4", 2") L400 Series Standard: 1 1/8" x 3 1/2" (29 mm x 89 mm) with dust box Optional: 1 1/4" x 4 7/8"(32 mm x 124 mm) with dust box

Specifications

Keying	
Cylinder format	6-pin Conventional mortise cylinder (standard); also available in concealed mortise cylinder, FSIC, SFIC and 7-pin SL cylinder formats plus less cylinder options.
Keyway	Patented Everest 29 S123 (standard); also available in open, restricted, and Primus XP security levels with available master keying and construction keying.
Wired electrified	
Input voltage	12V or 24V DC for L909X
Operating mode	Fail Safe or Fail Secure via switch on chassis
Current draw	0.23 amps maximum; 0.01 amps holding
Request to Exit	Rating: 3A @ 125V AC/2A @ 30V DC. Available on all L909X and L949X electrified functions. Also available option for the following mechanical functions: L9010/50/56/70/71/80 and L9453/56/58/65/66/80/85.
Latch bolt monitor	Available on all L909x and L949x electrified and L9010/25/26/50/56/70/71/80/82 and L9453/56/65/66/80/85 mechanical functions.
Door position sensor	Internal available on L909x electrified and L9010/80/82 mechanical functions; external available on all functions.
Deadbolt monitor	Available on L949x electrified and L9453/56/57/58/80/85/86/96 mechanical functions
Warranty	
	3 year limited mechanical and 1 year limited electromechanical
Certifications	
ANSI/BHMA	L/LV9000: ANSI/BHMA A156.13-2017 Series 1000, Grade 1 operation and security; with FSIC Grade 2; with SFIC Grade 3 L400: ANSI/BHMA A156.36, Grade 1
ICC	Complies with ICC A117.1 Accessible and Usable Buildings and Facilities
UL/cUL	Mechanical: UL 10C and CAN/ULC-S104 3 hour fire listed; all locks listed for A label single doors, 4' x 10' and pairs 8' x 10' Electrified: UL/ULC listed for single-point locking applications; UL listed for 3-hour fire door (except L9076 and L9077)
CA Fire Code	All levers with a return to door of 1/2" (64 mm) or less comply
FL Building Code	Miami-Dade NOA's and Florida Building Commission listings
Federal	BAA compliant, all functions

© 2019 Allegion
013141, Rev. 07/2019
www.allegion.com/us

VON DUPRIN®

Exit device

98/99 Series

Overview

The 98/99 Series devices are heavy-duty push pads. The 98 Series has a smooth mechanism case, while the 99 Series has a grooved mechanism case. The 98/99 Series has been certified to the highest industry standards and are used in schools, hospitals and government buildings.

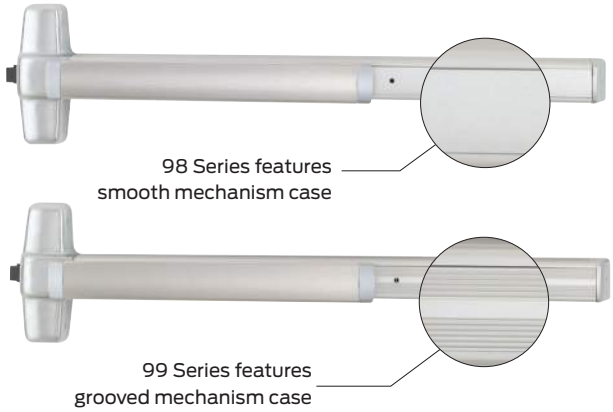

Device types



Rim device



75 Mortise lock device



27 Surface mounted vertical rod device [1]



47 Concealed vertical rod device, 5/16" throw [1]

48 Concealed vertical rod device, 5/8" top, 1 1/2" bottom throw



47WDC Concealed vertical rod wood door device [1]



49 Concealed vertical cable device [2]



50WDC Concealed vertical cable wood door device



57 Three-point latch device

[1] Also available less bottom rod (LBR)
[2] Also available less bottom latch (LBL)

ALLEGION™

VON DUPRIN®

Exit device
98/99 Series

Finishes



605
Bright Brass



606
Satin Brass



612
Satin Bronze



619
Satin Nickel



622
Matte Black

625
Bright Chrome



626
Satin Chrome



626AM
Satin Chrome, Antimicrobial



628
Aluminum, Clear Anodized



630
Satin Stainless



630AM
Satin Stainless, Antimicrobial



643e
Aged Bronze



693
Black



710
Dark Brown, Anodized

Due to the many variations in monitors and printers, color samples may appear different than the physical product. Contact your local sales representative for a physical color sample.

ALLEGION™

Trim functions

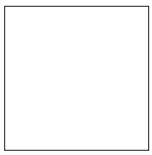

EO No outside trim

- Exit only

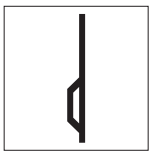

DT Dummy trim

- Pull when dogged (not recommended for fire device)

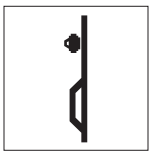

NL Night latch

- Key retracts latchbolt
- Rim and 1 ¼" mortise cylinder

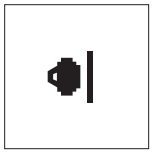

NLOP Night latch

- Key retracts latchbolt, pull required

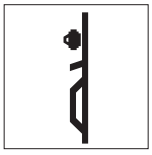

TP Thumbpiece

- Key locks and unlocks
- Rim and 1 ¼" mortise cylinder

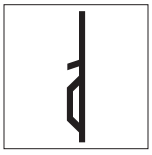

TPBE Thumbpiece, blank escutcheon

- Blank escutcheon always operable (no cylinder, use with DT trim)



L Lever

K Knob

- Key locks and unlocks
- Rim and 1 ¼" mortise cylinder
- Handed, reversible lever
- Electrified lever operation available

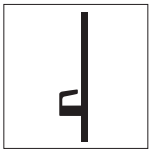

LDT Lever, dummy trim

KDT Knob, dummy trim

- Pull when dogged



LNL Lever, night latch

KNL Knob, night latch

- Key retracts latchbolt
- Rim and 1 ¼" mortise cylinder
- Handed, reversible lever



LBE[1] Lever, blank escutcheon

KBE Knob, blank escutcheon

- Always operable (no cylinder)



TL Turn lever

- Key locks and unlocks (use with DT trim)
- 1 ¼" mortise cylinder

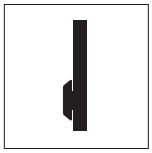

TLBE Turn lever, blank escutcheon

- Blank escutcheon always operable (no cylinder, use with DT trim)

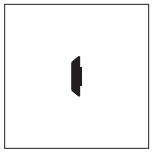

TLOP Turn lever, optional pull



HL Hospital latch

- Key locks and unlocks
- 1 ¼" mortise cylinder

Trim styles



990



996



696



697
3/4" (19mm) diameter pull



392-7



HL



374



VR910



VR914

Dimensions

Trim style	Width	Height	Thickness	Projection
990	3"	14 3/16"	3/32"	2"
996 Knob	2 3/4"	10 3/4"	27/32"	3 1/4"
996 Lever	2 3/4"	10 3/4"	27/32"	2 7/8"
696	1 5/8"	13 1/2"	3/16"	2 1/6"
697	1 5/8"	13 1/2"	3/16"	3"
392-7	3/4" inch round stainless steel with 7" center to center that matches the 98/99 center case. 3 1/2" offset with 1 1/2" clearance.			
HL	2 9/16"	7 7/8"	-	2 5/8"
374	2 3/4"	10 3/4"	27/32"	
VR910/914 with RIM/verticals	5 1/2"	11"	-	
VR910/914 with mortise	7 1/4"	11"	-	

Lever styles

Decorative levers



M51
- Knurling available



M52
- Knurling available



M53



M54



M55



M56



M57[1]



M61
- Handed



M62[1]
- Handed

Dimensions

Lever	Width	Projection
M51	4.5"	2.5"
M52	4.5"	2.4"
M53	4.4"	2.4"
M54	4.4"	2.3"
M55	4.4"	2.7"
M56	4.5"	2.3"
M57	4.5"	2.7"
M61	4.5"	2.7"
M62	4.6"	2.4"

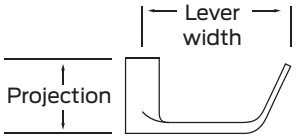

[1] Available in stainless steel substrate only

Lever styles

Decorative levers



M63
- Handed



M81
- Knurling available



M82



M83



M84



M85
- Handed



ME1[1]
- Handed



ME2[1]
- Handed



ME3[1]

Dimensions

Lever	Width	Projection
M63	4.6"	2.6"
M81	4.8"	2.5"
M82	4.9"	2.5"
M83	4.7"	2.25"
M84	5.1"	2.2"
M85	4.9"	2.7"
ME1	5.4"	2.6"
ME2	5.2"	2.4"
ME3	5"	2.8"

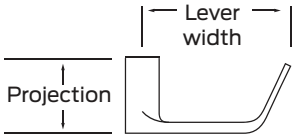

[1] Designed with Gensler as product design consultant

VON DUPRIN®

Exit device
98/99 Series

Lever styles

Standard levers



01



02
- Knurling available



03
- Knurling available



05



06
- Default lever
- Suites with Schlage Rhodes
- Knurling available



07
- Suites with Schlage Athens



12
- Handed



16
- Suites with Schlage Omega

Dimensions

Lever	Width	Projection
01	4.0"	2.1"
02	4.75"	2.3"
03	4.75"	2.813"
05	3.75"	2.8"
06	4.7"	2.1"
07	4.6"	2.3"
12	4.3"	2.9"
16	5.05"	2.66"

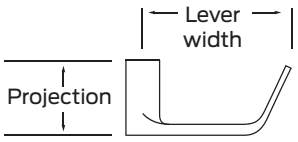

ALLEGION™

Lever styles

Standard levers



17
- Suites with Schlage Sparta
- Knurling available



18



Accent (ACC)
- Handed



Asti (AST)
- Handed



Merano (MER)
- Handed



Latitude (LAT)



Longitude (LON)

Dimensions

Lever	Width	Projection
17	4.7"	2.3"
18	4.75"	2.4"
Accent (ACC)	4.4"	3.1"
Asti (AST)	4.2"	2.5"
Merano (MER)	4.1"	2.5"
Latitude (LAT)	4.6"	2.3"
Longitude (LON)	4.9"	2.3"

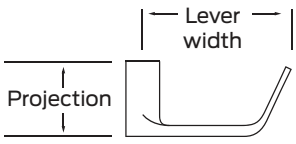

Electromechanical device options

Switches

LX — **Latchbolt monitoring**

LX-LC — **Latchbolt monitoring, low current**
- Signals use of an opening
- SPDT switch to monitor latch bolt
- 2 A maximum @ 24VDC; below 50 mA @ 24VDC for low current option

RX — **Request to exit**

RXLC — **Request to exit - low current**

RX2 — **Double request to exit - 2 RX switches**

WP-RX — **Waterproof request to exit**

RX-AUX — **RX to RX-2 conversion**
- Signals use of an opening
- SPDT switch to monitor pushpad
- 2 A maximum @ 24VDC; below 50 mA @ 24VDC for low current option

LX-RX — **Request to exit/latchbolt monitoring combination**

LX-RX-LC — **Request to exit/latchbolt monitoring combination, low current**
- 2 A maximum @ 24VDC; below 50 mA @ 24VDC for low current option

SS — **Signal switch**
- Monitors pushpad and latchbolt
- Signals unauthorized use of an opening
- Switch makes latch bolt tamper-resistant
- Up to 2.0 A @ 24VDC

Latch retraction

EL — **Electric latch retraction**

SD-EL — **Electric latch retraction with special center case dogging**
- Enables remote unlatching
- Alternative to manual dogging
- Voltage: 24VDC (continuous duty)
- Current: 16.0 A inrush / 0.3 A holding

QEL — **Quiet electric latch retraction**

HD-QEL — **Quiet electric latch retraction with hex dogging**

SD-QEL — **Quiet electric latch retraction with special center case dogging**
- Bolt retraction via switch
- Converts exit door to push-pull operation
- Voltage: 24VDC
- Current: 1.0 A inrush (0.5 sec.) / 0.14 A holding

Delayed egress

CX — **Chexit delayed exit**
- Meets NFPA 101 requirements
- Self-contained controls, locking, alarm
- Input voltage: 24VDC
- Input current inrush: 1.25 A
- Input current holding: 390 mA
- Alarm relay and secure relay contact ratings: 24 VDC, 1 A

CX-RCM — **Chexit remote module**
- Chexit for smaller doors that can not accommodate a standard Chexit device
- Size: 3.75” x 5.57” x 2.50”
- Input voltage: 24VDC
- Input current inrush: 1.25A
- Input current holding: 390mA
- Alarm relay and secure relay contact ratings: 24 VDC, 1 A

Miscellaneous

ALK — **Alarm exit kit**
- Unauthorized opening triggers 85-decibel horn
- Set in armed or disarmed mode by key
- Assembly includes both a 24VDC input and external inhibit

Electromechanical device options

CON — **Allegion Connect**

- Common connectors to connect various door hardware all the way to the power supply

E996 — **Electric locking and unlocking trim**

- Remains latched while unlocked
- Remote electrical control
- Voltage: 24VDC (Continuous Duty)
- Current: 0.22 amps

E7500 — **Electric mortise lock device**

- Voltage: 12 or 24VDC
- Current: 0.60 amps @ 12VDC, 0.30 amps @ 24VDC

Electromechanical device options

Matrix shows available options per device type but does not represent compatibly across multiple options.

	Switches									Latch retraction					Delayed egress		Misc			
	LX	LX-LC	RX	RXLC	RX2	WP-RX	LX-RX	LX-RX-LC	SS	EL	SD-EL	QEL	HD-QEL	SD-QEL	CX	CX-RCM	ALK	CON	E996	Mortise
98 99	■	■	■	■	■	■	■	■	■	■	■	■	■	■	■	■	■	■	■	
98F 99F	■	■	■	■	■	■	■	■	■	■		■			■	■	■	■	■	
XP98 XP99		■	■	■	■	■	■	■		■	■	■	■	■	■	■	■	■	■	
XP98-F XP99-F		■	■	■	■	■	■	■		■		■			■	■	■	■	■	
9875 9975			■	■	■	■			■	■	■	■	■	■	■	■	■	■	■	■
9875-F 9975-F			■	■	■	■			■	■		■			■	■	■	■	■	■
9827 9927	■	■	■	■	■	■	■	■	■	■	■	■	■	■	■	■	■	■	■	
9827-F 9927-F	■	■	■	■	■	■	■	■	■	■		■			■	■	■	■	■	
9857 9957	■	■	■	■	■	■	■	■	■	■	■	■	■	■	■	■	■	■	■	
9857-F 9957-F	■	■	■	■	■	■	■	■	■	■		■			■	■	■	■	■	
9847 9947	■	■	■	■	■	■	■	■	■	■	■	■	■	■	■	■	■	■	■	
9847-F 9947-F	■	■	■	■	■	■	■	■	■	■		■			■	■	■	■	■	
9848 9948	■	■	■	■	■	■	■	■	■	■	■	■	■	■	■	■	■	■	■	
9848-F 9948-F	■	■	■	■	■	■	■	■	■	■		■			■	■	■	■	■	
9849 9949	■[1]	■	■	■	■	■	■	■	■	■	■	■	■	■	■	■	■	■	■	
9849-F 9949-F	■[1]	■	■	■	■	■	■	■	■	■		■			■	■	■	■	■	
9847WDC 9947WDC	■	■	■	■	■	■	■	■	■	■	■	■	■	■	■	■	■	■	■	
9847WDC-F 9947WDC-F	■	■	■	■	■	■	■	■	■	■		■			■	■	■	■	■	
9850WDC 9950WDC	■	■	■	■	■	■	■	■	■	■	■	■	■	■	■	■	■	■	■	
9850WDC-F 9950WDC-F	■	■	■	■	■	■	■	■	■	■		■			■	■	■	■	■	

[1] For 98/9949 devices, LX switch monitors trim input or electric dogging of EL/QEL devices. LX switch does not monitor latchbolt condition.

Mechanical device options

Dogging

CD — **Cylinder dogging, panic only**

CD-CX — **Center case cylinder dogging for Chexit devices**

CI — **Cylinder dogging indicator**
- Battery-operated dogging indicator in cylinder format with red light visible from over 75 feet away

DI — **Dogging indicator**
- Battery-operated dogging indicator in hex format with red light visible from over 75 feet away

LD — **Less dogging**

SD — **Special center case dogging**
- Center case cylinder dogging

Classroom security

-2 — **Double cylinder**
- Inside key cylinder locks/unlocks outside trim

-2SI — **Double cylinder with security indicator**
- Inside key cylinder locks/unlocks outside trim with visible indicators that provide status of door

CDSI — **Cylinder dogging with indicator**
- Provides visible lock/unlock indicators showing whether device is dogged or undogged

HDSI — **Hex dogging with indicator**
- Provides visible lock/unlock indicators showing whether device is dogged or undogged

Environmental

PN — **Pneumatic latch retraction**
- For areas where electrical devices banned
- Special linkage for mechanical or pneumatic dogging

QM — **Quiet mechanical option**
- Provides damper-controlled relatching of device

INS — **Insulclad kits**
- Kits with longer fasteners or parts for Insulclad doors

AM — **Anti-microbial finish**

Weatherized

WH — **Weep holes**
- Drainage (weep) holes in mechanism case

WS — **Windstorm**
- Severe weather certified/tested
- FEMA and ICC compliant
- Tornado and hurricane tested

California code

AX — **Accessible device**
- UL certified to meet new 5 lb. maximum operating force requirement
- Exceeds ANSI/BHMA requirements

Latches

PL — **Pullman latch**
- Latches are always extended
- Most commonly used in conjunction with electric strikes and LBR-less bottom rod application

Mechanical device options

Touch bar trim

RSS — **Red silk screen**
- Red silk-screened lettered touchbar trim

PUSH — **PUSH**
- Touchbar trim embossed PUSH

SG — **Safety glow**
- Self-illuminating touchpad
- Glows brightly during low or no light conditions

KN — **Knurled touchbar**
- Tactile warning applied to device

BRAILLE — **Braille**
- Vision impaired touchpad
- Raised letter and Braille

Mechanical device options

Matrix shows available options per device type but does not represent compatibly across multiple options.

	Dogging						Classroom security				Environmental				Weatherized		CA code
	CD	CD-CX	CI	DI	LD	SD	-2	-2SI	CDSI	HDSI	PN	QM	INS	AM	WH	WS	AX
98 99	■	■	■	■	■	■	■	■	■	■	■	■		■	■		■
98F 99F							■	■			■	■		■	■		■
XP98 XP99	■	■	■	■	■	■	■	■	■	■				■	■		■
XP98-F XP99-F							■	■						■	■		■
9875 9975	■	■	■	■	■	■	■		■	■	■			■	■		
9875-F 9975-F							■				■			■	■		
9827 9927	■	■	■	■	■	■			■	■	■	■		■	■	■	■ LBR
9827-F 9927-F											■	■		■	■	■	■ LBR
9857 9957	■	■	■	■	■	■			■	■	■			■	■	■	
9857-F 9957-F											■			■	■	■	
9847 9947	■	■	■	■	■	■			■	■	■		■	■	■		■ LBR
9847-F 9947-F											■			■	■		■ LBR
9848 9948	■	■	■	■	■	■			■	■	■			■	■		
9848-F 9948-F											■			■	■		
9849 9949	■	■	■	■	■	■			■	■	■		■	■	■		■ LBL
9849-F 9949-F											■			■	■		■ LBL
9847WDC 9947WDC	■	■	■	■	■	■			■	■	■			■	■		
9847WDC-F 9947WDC-F											■			■	■		
9850WDC 9950WDC	■	■	■	■	■	■			■	■	■			■	■		■ LBL
9850WDC-F 9950WDC-F											■			■	■		■ LBL

Mechanical device options

Matrix shows available options per device type but does not represent compatibly across multiple options.

	Latches	Touch bar trim				
	PL	RSS	PUSH	SG	KN	BRAILLE
98 99		■	■	■	■	■
98F 99F		■	■	■	■	■
XP98 XP99		■	■	■	■	■
XP98-F XP99-F		■	■	■	■	■
9875 9975		■	■	■	■	■
9875-F 9975-F		■	■	■	■	■
9827 9927	■	■	■	■	■	■
9827-F 9927-F		■	■	■	■	■
9857 9957		■	■	■	■	■
9857-F 9957-F		■	■	■	■	■
9847 9947	■	■	■	■	■	■
9847-F 9947-F		■	■	■	■	■
9848 9948		■	■	■	■	■
9848-F 9948-F		■	■	■	■	■
9849 9949		■	■	■	■	■
9849-F 9949-F		■	■	■	■	■
9847WDC 9947WDC		■	■	■	■	■
9847WDC-F 9947WDC-F		■	■	■	■	■
9850WDC 9950WDC		■	■	■	■	■
9850WDC-F 9950WDC-F		■	■	■	■	■

VON DUPRIN®

Exit device
98/99 Series

Specifications

Accessibility	▪ Force to depress push pad – AX device: 5 lbs – Standard device: 15 lbs ▪ Push pad projection – Neutral: 3 13/16" (97 mm) – Depressed: 3 1/16" (78 mm)
Certifications/ approvals	All Von Duprin 98/99 exit devices are ANSI/BHMA Certified. Please refer to the BHMA Certified Products Directory for specific listings.
Mounting height	39 13/16" (1011 mm) 39 11/16" (1008 mm) with mullion
Warranty	36 months from the date of placing the product in operation

Dimensions

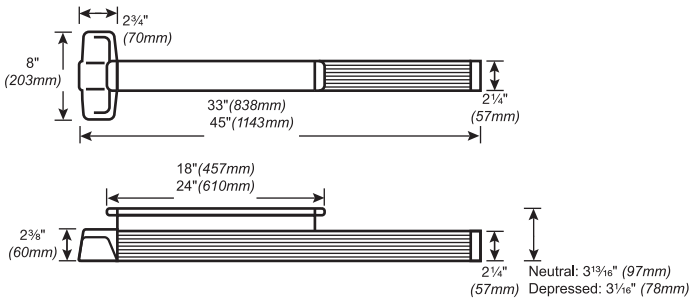

© 2019 Allegion
013139, Rev. 11/2019
www.allegion.com/us

ALLEGION™

Full size interchangeable core cylinders for exit devices, aluminum door, etc.



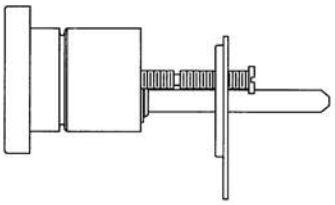

Interchangeable core rim cylinders for exit devices	
Number	**Core mechanism**
20-057	Conventional core
20-757	Primus core
20-757-XP	Primus XP core
20-079	Housing only, less core

Available in 605, 606, 609, 612, 613, 619, 625, 626, and 643e finish.



Cylinders for Adams Rite MS and 4700 Series Lori 4500 Series and Corbin Russwin DL3000 Series		
Number	**Core mechanism**	**Collar**
26-098	Conventional core	Compression ring & spring
20-062	Conventional core	3/16" + 3/8" blocking rings
20-766	Primus core	3/16" + 3/8" blocking rings
20-766-XP	Primus XP core	3/16" + 3/8" blocking rings
20-060	Housing less core	None

These cylinders include set screw pack B220-050 for Adams Rite locks.



K510-711
Adams Rite
MS cam

Cylinders for Adams Rite 4070 Series deadlocks		
Number	**Core mechanism**	**Collar**
20-091	Conventional core	3/16" + 3/8" blocking rings
20-722	Primus core	3/16" + 3/8" blocking rings
20-722-XP	Primus XP core	3/16" + 3/8" blocking rings
20-090	Housing less core	None



B520-378
Adams Rite
4070 cam

Notes
1. Mortise cylinders available 605, 606, 609, 612, 613, 619, 625, 626, and 643e finish. Cores furnished 606 and 626 only.
2. To differentiate between Classic and Everest 29, specify keyway. Example: C or CP (Classic), S123 (Everest 29).
3. All cylinders are 1 1/2" long.
4. Specify LKB if 0-bitted Primus XP cylinders are required less key blanks.

Full Size Interchangeable Core Availability



A-Series
Orbit design



ND-Series lever
all designs



AL-Series
Saturn design



H-Series knob
Orbit design



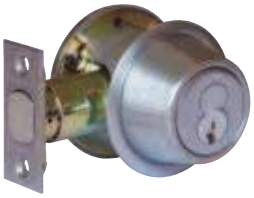

B500-Series



L-Series
all designs
except concealed



B600 / 700-Series



S-Series
all designs
except Flair



D-Series knob
Orbit design



S200-Series
all designs for S210

All except Flair for other functions



Full Size Interchangeable Core Cylinders for Schlage Locksets

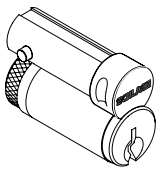

Full Size Core Only

Number	Mechanism
23-030	Conventional core
30-120	Conventional core for hotel function (specify hand)
20-740-XP	Primus XP core (not available in hotel function)

Available 606 and 626 finish only. Order control keys separately.

Full Size IC Housings for Bored Deadlocks, Less Core

Lockset Series	Description	Number	Specify Finish
B500-Series	Outside	B610-203, B610-205	605, 609, 612, 613, 619, 625, 626, and 716
	Inside	B610-028**	605, 609, 612, 613, 619, 625, 626, and 716
B250, H, S200-Series	Outside	22-061	605, 606, 609, 610, 611, 612, 613, 616, 625, 626
	Inside of B252	22-062	
B600 / 700-Series	Outside	B610-027	605, 606, 609, 612, 613, 625, 626
	Inside	B610-028	See Note Below

Specify finish of B610-031 inside snap-on faceplate ordered separately for BC162 and B662/762.
**Inside housing does not include snap-on faceplate

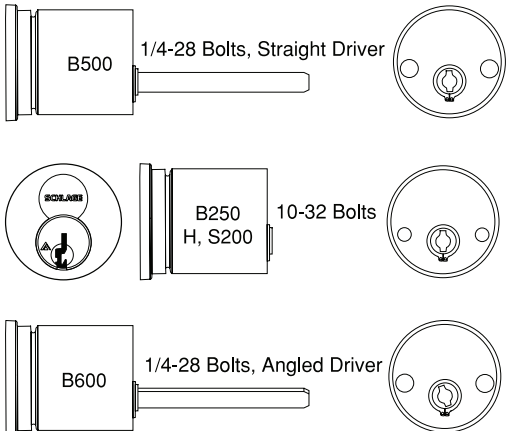



KS43F KS72F KS92M

Full Size Interchangeable Core Padlocks

Part #	Shackle Dimensions		
	A	B	C
LESS CYLINDER - FULL SIZE INTERCHANGEABLE CORE			
BRASS BODY			
KS43A3200	3/8″	3/4″	3/4″
KS43D3200	3/8″	1 1/2″	3/4″
KS43F3200	3/8″	2″	3/4″
KS43G3200	3/8″	4″	3/4″
STEEL BODY			
KS72M3200	7/16″	1″	7/8″
KS72F3200	7/16″	2″	7/8″
KS92M3200	3/8″	1″	3/4″

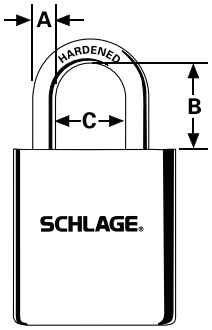

Note: To order Primus XP add the suffix - XP to the Primus part number. (Example: 12-345-XP)

Full Size Interchangeable Core Mortise Cylinders



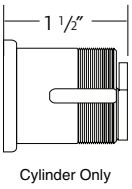

Cylinder Only

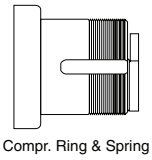

Compr. Ring & Spring

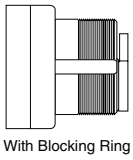

With Blocking Ring



Cylinders for Schlage L-Series Mortise Locks

	Design	Function	Core Mechanism		
			Conventional	Primus, Primus XP	Housing Less Core
	**L & N Escutcheons** (cylinders with compression ring)	All Except Below	30-008	20-798, 20-798-XP	30-007
		L9060P Outside	30-030	20-782, 20-782-XP	30-032 + 36-083
		L9485P, L9486P Hotel Funtions	30-010*	N/A	30-007
	**Sectional Trim** (cylinder with compression ring, spring and 3/8" blocking ring). 9060 requires 1/2" blocking ring.	All Except Below	30-138	20-776, 20-776-XP	30-137
		L9060P Outside	30-030 + 36-083 + 35-082-030	20-783, 20-783-XP	30-032 + 36-083 + 36-082-050
		L9485P, L9486P Hotel Funtions	30-040*	N/A	30-137

* Hotel function cores are handed. Specify hand of door.



L583-489
Cam for All Functions Except L9060 Outside



K510-680
Cam for L9060 Outside

Mortise Cylinders with Straight Cam for Exit Devices

Number	Core Mechanism	Collar
26-091	Conventional core	Compression ring & spring
20-061		3/8" blocking rings + compression ring & spring
20-763, 20-763-XP	Primus/Primus XP core	Compression ring & spring
20-771, 20-771-XP		3/8" blocking rings + compression ring & spring
20-059	Housing less core	None
26-064		Compression ring & spring



K510-730
Straight Cam, Other Applications

Notes 1. Available 605, 606, 609, 610, 612, 613, 625, and 626 finish. Cores furnished 606 and 626 only.
2. To differentiate between Classic and Everest, specify keyway. Example: C or CP (Classic), C123 (Everest). Everest C123 keyway standard.
3. All cylinders are 1 1/2" long.
4. Specify LKB if 0-bitted Primus XP cylinders are required less key blanks.

Full Size Interchangeable Core Cylinders for Exit Devices, Aluminum Doors, etc.



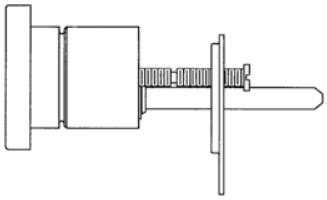

Interchangeable Core Rim Cylinders for Exit Devices

Number	Core Mechanism
20-057	Conventional core
20-757	Primus core
20-757-XP	Primus XP core
20-079	Housing only, less core

Available 605, 606, 609, 610, 612, 613, 625 and 626 finish.



Cylinders for Adams Rite MS and 4700 Series Lori 4500 Series and Corbin Russwin DL3000 Series

Number	Core Mechanism	Collar
26-098	Conventional core	Compression ring & spring
20-062	Conventional core	3/16″ + 3/8″ blocking rings
20-766	Primus core	3/16″ + 3/8″ blocking rings
20-766-XP	Primus XP core	3/16″ + 3/8″ blocking rings
20-060	Housing less core	None

These cylinders include set screw pack B220-050 for Adams Rite locks.



K510-711
Adams Rite
MS Cam

Cylinders for Adams Rite 4070 Series Deadlocks

Number	Core Mechanism	Collar
20-091	Conventional core	3/16″ + 3/8″ blocking rings
20-722	Primus core	3/16″ + 3/8″ blocking rings
20-722-XP	Primus XP core	3/16″ + 3/8″ blocking rings
20-090	Housing less core	None



B520-378
Adams Rite
4070 Cam

Notes
1. Mortise cylinders available 605, 606, 609, 610, 612, 613, 625, and 626 finish. Cores furnished 606 and 626 only.
2. To differentiate between Classic and Everest, specify keyway. Example: C or CP (Classic), C123 (Everest).
3. All cylinders are 1 1/2″ long.
4. Specify LKB if 0-bitted Primus XP cylinders are required less key blanks.

ALLEGION™

VON DUPRIN®

6200 Series

Strikes for mortise or cylindrical devices

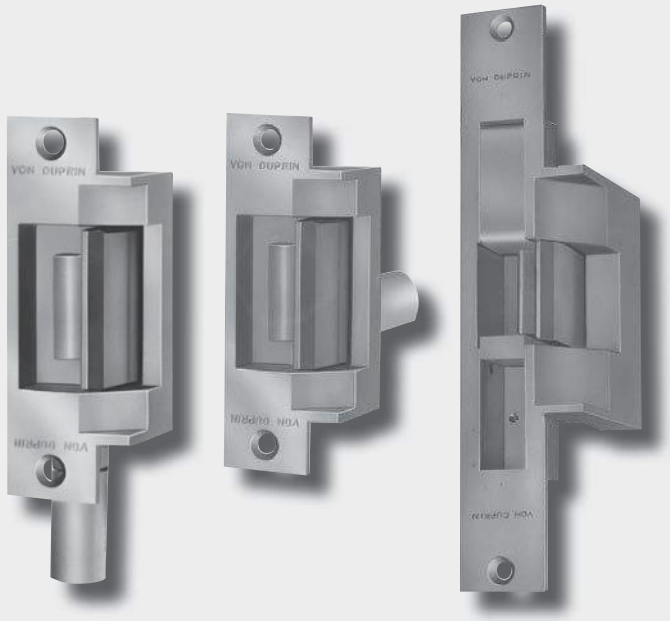

Overview

Von Duprin electric strikes are known for their reliability, durability and security. The 6200 Series strikes are designed to withstand abuse. Their heavy-duty stainless steel construction is fully UL1034 and UL10C listed and meets ANSI/BHMA Grade 1.

6200 Series electric door strikes are designed for use with a variety of mortise or cylindrical locksets. Electrified strikes allow remote release of a locked door by activating a movable lip (keeper) using an entry/exit button or credential reader and can be a cost effective means for managing access. 6200 Series strikes come standard as 24 VDC in fail secure mode. 12 VDC and AC operation can be selected, as can fail safe mode and other options that enable you to configure these strikes to fit your exact needs.

Use 6200 Series electric strikes for retrofit applications or new construction. To assure the proper selection of an electric strike on new applications, lockset compatibility charts are shown on the next page. When using a lockset not listed or when retrofitting a strike to an existing application, please contact Von Duprin Technical Support for application assistance.

Features and benefits

- 17 configurations available for cylindrical and mortise applications
- Heavy-duty stainless steel construction
- 24 VDC standard with 12, 16 and 28 VDC operation optional
- Two-piece plug connectors are furnished for ease of installation and removal during strike servicing
- Options include rectifier kit for VAC to VDC conversion, dual monitor switches, entry buzzer and Allegion Connect wire extension
- Six popular finishes available to suite with existing hardware
- Suitable for interior and exterior doors
- UL 10C 3-hour fire-rated (fail secure only)
- UL 1034 listed for burglary-resistant electric door strikes
- Meets ANSI/BHMA A156.31, Grade 1 for endurance and dynamic strength
- Meets ANSI/BHMA A156.31, Grade 1, 1500 lbs static strength
- Dynamic strength 70 ft-lbs
- Endurance 1,000,000 cycles

6200 Series power requirements

Models	Voltage	Current	Duty	Amps	Ohms
All	12V	DC	Continuous	0.60	21
All	16V	DC	Continuous	0.40	38
All	24V	DC	Continuous	0.33	83
All	28V	DC	Continuous	0.25	111

Continuous duty = Energized 1 minute or more

Mortise lockset compatibility[1, 3]

6211, 6211AL, 6211WF, 6212, 6213, 6214, 6215, 6221, 6222, 6223, 6224, 6224AL, 6225 and 6226 strikes

Manufacturer	Model number
Von Duprin	7500
Adams Rite	4510, 4710
Baldwin	6000
Best	24H, 30H
Corbin	9000
Falcon	M2300, M2500, M2600, M3300, M3500, M3600
Precision	Mortise
Russwin	Mortise
Sargent	7700, 8100, 9000
Schlage	L9000, K30, K40, K50, K60
Yale	7030, 7130, 8600, 8700

Mortise lockset compatibility[1, 3]

6210

Manufacturer	Model number
Von Duprin	7500
Best	30H (not 45H/47H)
Corbin/Russwin	ML2200, 5000, 9000, CR2200 (not 2000)
Falcon	M100, M200, M300, M400, M500, M600
Sargent	7700, 8100 (not 7800/8200)
Schlage	L9000
Yale	8700 (not 8800)

Cylindrical lockset compatibility[1, 3]

6211, 6211AL, 6211WF, 6212, 6213, 6214, 6215, 6221, 6222, 6223, 6224, 6224AL, 6225 and 6226 strikes

Manufacturer	Cylindrical latchbolt projection
Baldwin	1/2" – 3/4" (13 mm – 19 mm)
Best	3/8" – 3/4" (10 mm – 19 mm)[2]
Corbin	1/2" – 3/4" (13 mm – 19 mm)
Falcon	1/2" – 3/4" (13 mm – 19 mm)
Russwin	1/2" – 3/4" (13 mm – 19 mm)
Sargent	1/2" – 3/4" (13 mm – 19 mm)
Schlage	3/8" – 3/4" (10 mm – 19 mm)[2]
Yale	1/2" – 3/4" (13 mm – 19 mm)

Note: When using device not listed or when retrofitting a strike to an existing application, please contact Von Duprin Technical Support for application assistance.

1. Von Duprin cannot guarantee compatibility, as other manufacturer's designs may change without notice.
2. Signalling may not function when using 3/8" (10 mm) throw bolt. Deadlocking cannot be guaranteed with all locks.
3. When using a lockset not listed or when retrofitting a strike to an existing application, please contact Von Duprin Technical Support for assistance.

Wiring

AC

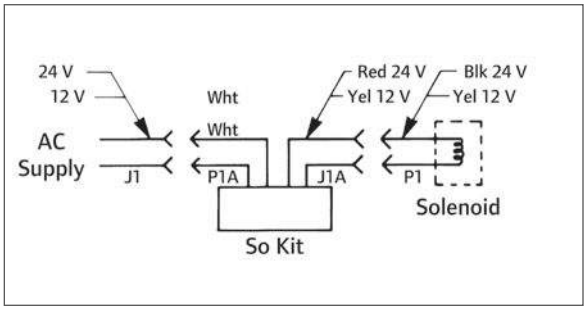

AC with Buzzer

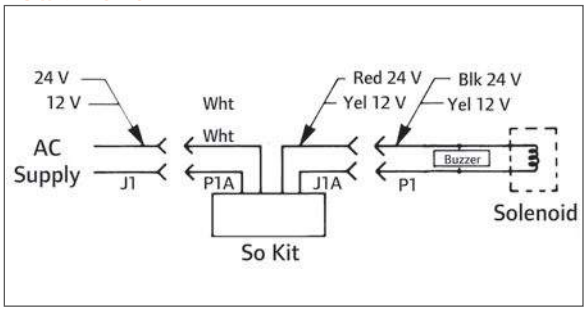

DC

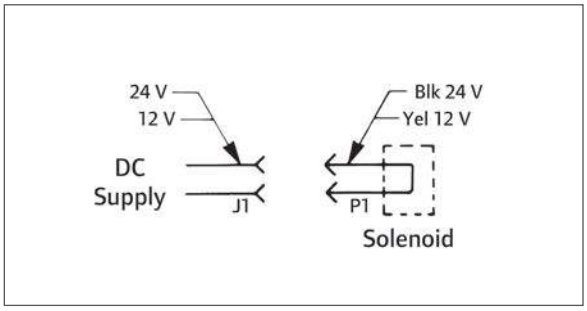

DC with Buzzer

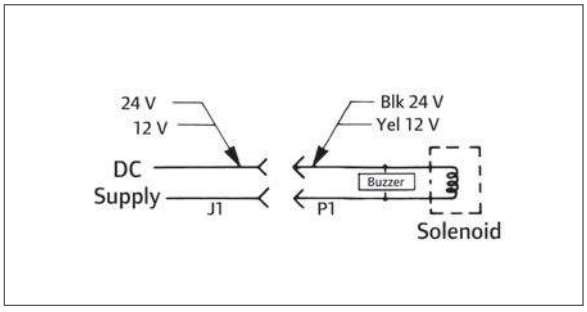

Optional DS (FSE Shown)

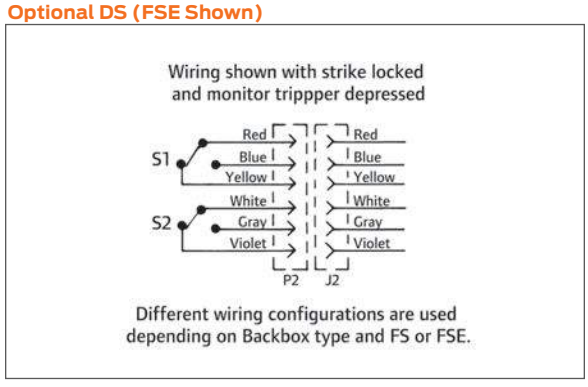



Model specifications

Model number		6210	6211	6211AL	6211WF	6212
Retrofits model		N/A	VD 3140 FA 712	FA 722	FA 732	VD 3146
Latchbolt throw		¾"	¾"	¾"	¾"	¾"
Face plate length		4 7/8"	4 7/8"	4 7/8"	4 7/8"	6 3/8"
Backbox depth		1 3/4"	1 11/16"	1 11/16"	4 ½"	1 21/32"
Lockset	Mortise without deadbolt	■	■	■	■	■
	Mortise with deadbolt 1" throw	---	---	---	---	---
	Cylindrical	---	■	■	■	■
Number of doors	Single	■	■	■	■	■
	Pair	---	---	---	---	---
Door and frame type	Hollow metal	■	■	---	---	■
	Aluminum	■	■	■	---	■
	Wood	---	---	---	■	---
Options	DS or DS-LC (dual monitor switches)	■	■	■	■	■
	EB (entry buzzer - fail-secure only)	■	■	■	■	■
	28 VDC AC rectifier kit	■	■	■	■	■
	16 VDC solenoid	■	■	■	■	■
Certifications	UL1034	■	■	■	■	■
	UL10C	3 hour	3 hour	3 hour	3 hour	3 hour
	ANSI/BHMA 156.31	Meets Grade 1, 1500 lbs static strength; 70 ft lbs dynamic strength; 1,000,000 cycles endurance				
Application Notes		1	---	---	2	3

Application notes:

1. For use in ANSI prep at standard height. Strike pocket inserts are provided to accommodate different manufacturers deadlocking trigger locations.
2. Designed to replace Folger Adams 732. Wood frame horizontal solenoid location differs from Folger Adams. Requires additional frame prep when retrofitting.
3. Fits modified ANSI 115.2 cutout. Designed to replace Von Duprin 3146.



Model specifications

Model number		6212WF	6213	6214	6215	6216	6221
Retrofits model		N/A	VD 3041, 3042, 3061, 3062	FA 310-2 3/4	FA 310-2	FA 310-3-1	VD 3071 VD 3072
Latchbolt throw		3/4"	3/4"	3/4"	3/4"	3/4"	3/4"
Face plate length		6 3/8"	6"	9"	9"	9"	6"
Backbox depth		4 1/2"	2 1/2"	2"	1 5/8"	2 7/8"	4 3/4"
Lockset	Mortise without deadbolt	■	■	■	■	---	■
	Mortise with deadbolt 1" throw	---	---	---	---	■	---
	Cylindrical	■	■	■	■	---	■
Number of doors	Single	■	■	■	■	■	---
	Pair	---	---	---	---	---	■
Door and frame type	Hollow metal	---	■	■	■	■	■
	Aluminum	---	■	■	■	■	■
	Wood	■	See note 1 below	---	---	■	■
Options	DS or DS-LC (dual monitor switches)	■	■	■	■	■	■
	EB (entry buzzer - fail-secure only)	■	■	■	■	■	■
	28VDC AC rectifier kit	■	■	■	■	■	■
	16VDC solenoid	■	■	■	■	■	■
Certifications	UL1034	■	■	■	■	■	■
	UL10C	3 hour	3 hour	3 hour	3 hour	3 hour	3 hour*
	ANSI/BHMA 156.31	Meets Grade 1, 1500 lbs static strength; 70 ft lbs dynamic strength; 1,000,000 cycles endurance					
Application notes		---	1	---	---	2	3

* When pair door has inactive leaf.

Application notes:

1. Includes wood frame for retrofit applications.
2. Deadbolt must be manually operated.
3. Open back electric strike for use on 1 3/4" (44 mm) thick double door applications. 4 3/4" (120 mm) minimum stile required. For a concealed vertical rod and mortise device combination, specify "A" backbox.



Model specifications

Model number		6222	6223	6224	6224AL	6225	6226
Retrofits model		FA 310-2 ¾ OB	VD 3091 VD 3092	FA 310-2 ¾	FA 310-2RF	FA 310-2 OB	FA 310-2
Latchbolt throw		¾"	¾"	¾"	¾"	¾"	¾"
Face plate length		9"	6"	9"	9"	9"	9"
Backbox depth		2"	4 ½"	2"	1 ⅝"	1 ⅝"	1 ⅝"
Lockset	Mortise without deadbolt	■	■	■	■	■	■
	Mortise with deadbolt 1" throw	---	---	---	---	---	---
	Cylindrical	■	■	■	■	■	■
Number of doors	Single	---	---	---	---	---	---
	Pair	■	■	■	■	■	■
Door and frame type	Hollow metal	■	■	■	---	■	■
	Aluminum	■	■	■	■	■	■
	Wood	---	■	---	---	---	---
Options	DS or DS-LC (dual monitor switches)	■	■	■	■	■	■
	EB (entry buzzer - fail-secure only)	■	■	■	■	■	■
	28VDC AC rectifier kit	■	■	■	■	■	■
	16VDC solenoid	■	■	■	■	■	■
Certifications	UL1034	■	■	■	■	■	■
	UL10C	3 hour*	3 hour*	3 hour*	3 hour*	3 hour*	3 hour*
	ANSI/BHMA 156.31	Meets Grade 1, 1500 lbs static strength; 70 ft lbs dynamic strength; 1,000,000 cycles endurance					
Application notes		1	2	3	4	5	6

* When pair door has inactive leaf.

Application notes:

1. Open back electric strike for use on 1 ¾" (44 mm) thick double door applications
2. Closed back electric stirke for use on 1 ¾" (44 mm) thick double door applications. 4 ¾" (120 mm) minimum stile required. For a concealed vertical rod and mortise device combination specify “A” backbox.
3. Closed back electric strike for use on 1 ¾" (44 mm) or 2 ¼" (57 mm) thick double door applications.
4. Closed back electric strike for use on 1 ¾" (44 mm) or 2 ¼" (57 mm) thick aluminum double door applications.
5. Open back electric stirke for use on 1 ¾" (44 mm) thick double door applications.
6. Closed back electric strike for use on 1 ¾" (44 mm) or 2 ¼" (57 mm) thick double door applications.

Dimensions

6210

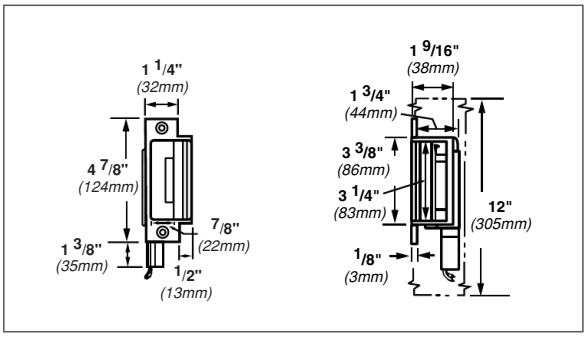

6211

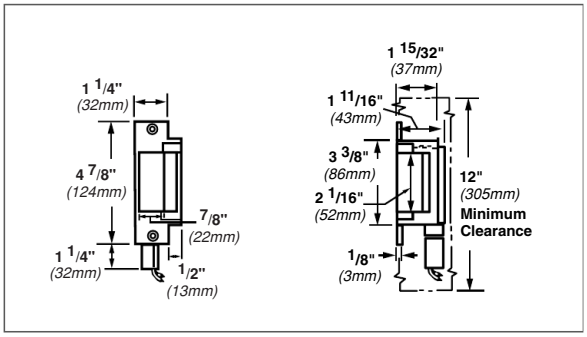

6211AL

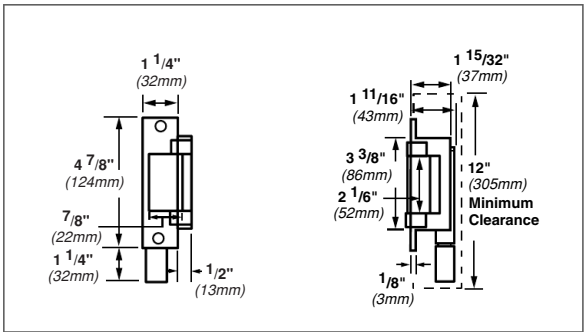

6211WF

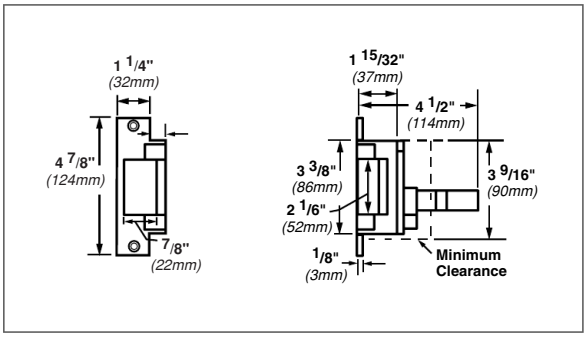

6212

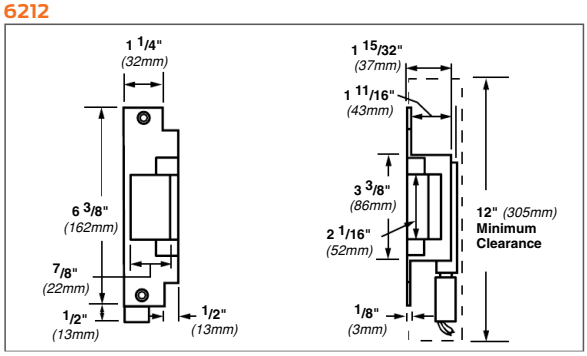

6212WF

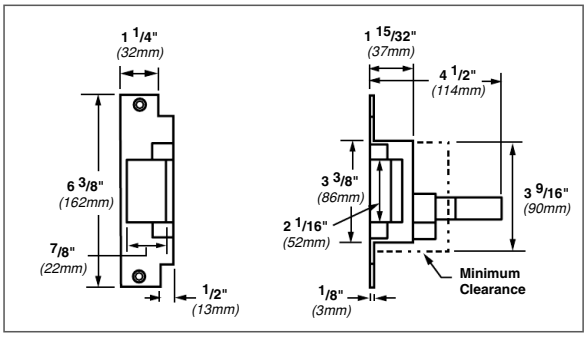

6213

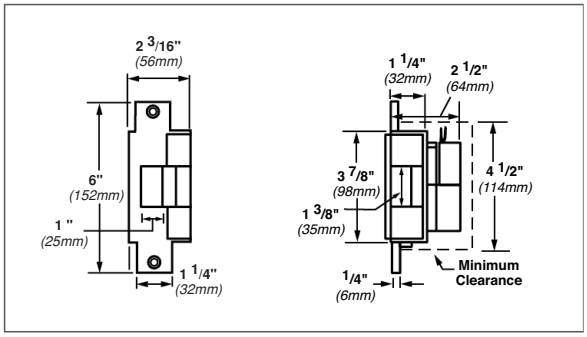

6214

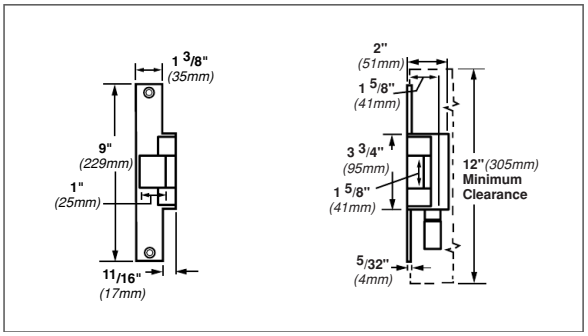

6215

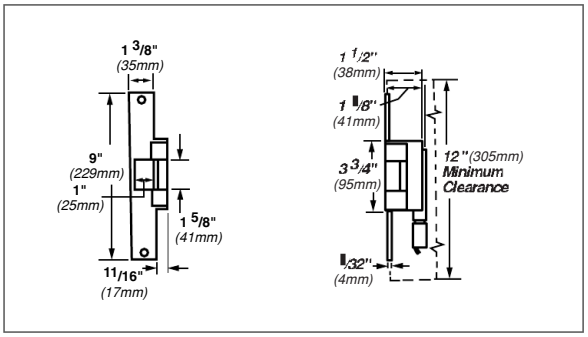

6216

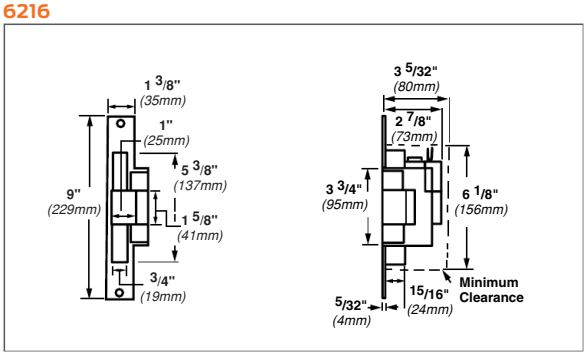

Dimensions

6221

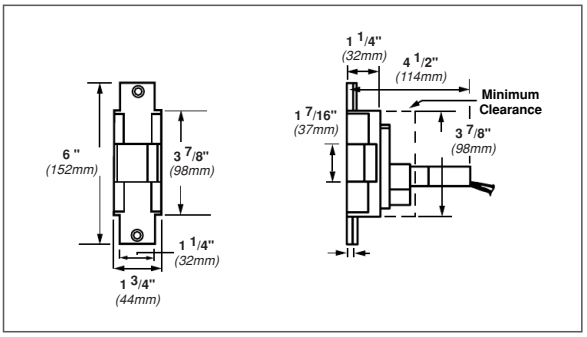

6222

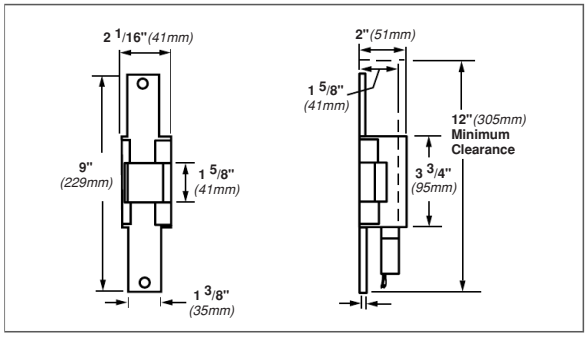

6223

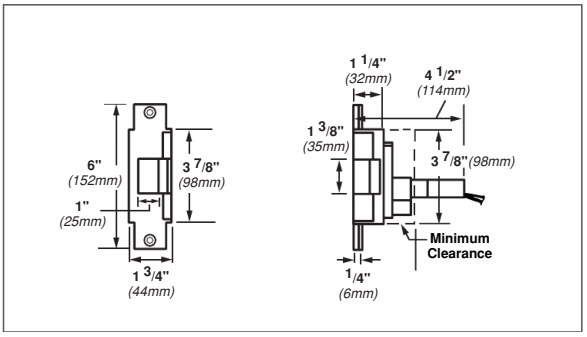

6224

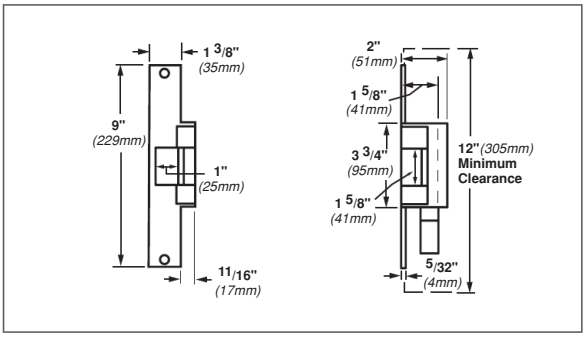

6224AL

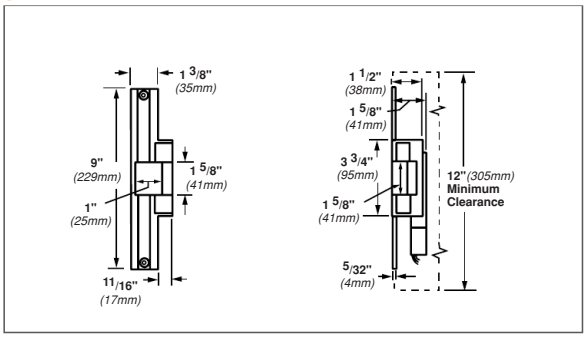

6225

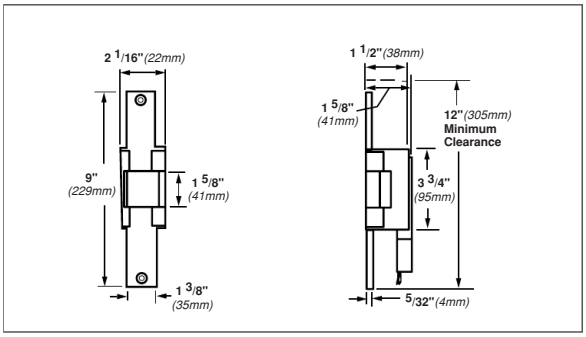

6226

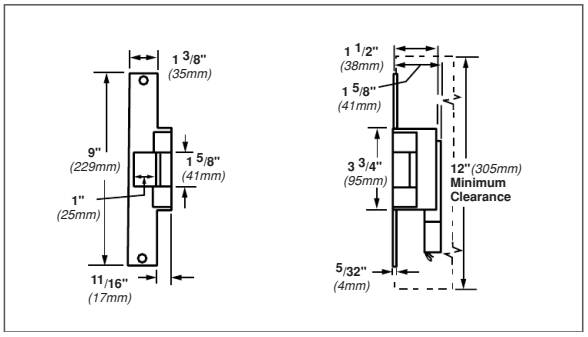

Ordering information

6210-FSE-DS-24-S024-US3-EB-CON

Model	Power failure mode	Dual switch*	Voltage	Rectifier kit*	Finish	Buzzer*	Allegion Connect*
1	2	3	4	5	6	7	8

* Optional

Selections correspond with the numbers above

1	Model
Reference specification chart to make the proper model selection	

2	Power failure mode
FSE	Fail-secure. Requires power to be applied to unlock the strike lip. On loss of power, the strike lip is locked. **Fire-rated.**
FS	Fail-safe. Requires power to be applied to lock the strike lip. On loss of power, the strike lip is unlocked. **Non-fire-rated.**

3	Dual switch (optional)
DS	Monitors latch bolt and lock status. DS switches rated for 24 VDC at .050 - 2.0 amps.
DS-LC	Low current option for computer monitoring. Monitors latch bolt & lock status. DS-LS switches rated for 24 VDC at .050 amp or less.

4	Voltage (VDC)
24	Low voltage DC power (standard)
12	Low voltage DC power
16	Low voltage DC power
18	Low voltage DC power

If AC power is required, specify rectifier kit.

5	Rectifier kit (optional)
S012	Converts 12 VAC voltage to 12 VDC to operate the solenoid
S024	Converts 24 VAC voltage to 24 VDC to operate the solenoid

6	Finish
US3	Plated polished brass on stainless steel
US4	Plated dull brass on stainless steel
US10	Plated dull bronze on stainless steel
US10B	Plated dark bronze, oil rubbed on stainless steel
BHMA 629/US32	Stainless steel, polished
BHMA 630/US32D	Stainless steel, satin

7	Buzzer (optional)
EB	Entry Buzzer

Only available if Fail-Secure (FSE) is specified.

8	Allegion Connect
CON	Allegion Connect Connector

6 in. wire extension harness available

Allegion, the Allegion logo, Schlage, Von Duprin, the Von Duprin logo, and Falcon are trademarks of Allegion plc, its subsidiaries and/or affiliates in the United States and other countries. All other trademarks are the property of their respective owners.

About Allegion

Allegion (NYSE: ALLE) is a global pioneer in safety and security, with leading brands like CISA®, Interflex®, LCN®, Schlage® and Von Duprin®. Focusing on security around the door and adjacent areas, Allegion produces a range of solutions for homes, businesses, schools and other institutions. Allegion is a $2 billion company, with products sold in almost 130 countries. For more, visit **www.allegion.com.**

aptiQ ■ LCN ■ SCHLAGE ■ STEELCRAFT ■ VON DUPRIN

ALLEGION™

© 2016 Allegion
005368, Rev. 04/16
www.allegion.com/us



LG1 LG7 Lock Guard

- Units are non-handed and incorporate security frame pin to prevent separation of the door and frame. LG7 does not incorporate the security frame pin
- Unit covers the latch bolt area of the door and lock, thereby providing added protection from burglars, vandals or normal abuse.
- Ideal for use with mortise or cylindrical locks.
- Easy installation.
- Through bolted with carriage bolts and nuts.
- Available in a variety of materials, 13 gauge stainless steel, 12 gauge steel and brass material.

Dimensions

3" Wide x 11-1/2" High

Bolt center to center: 10-1/2"

Finishes

Ives Number	USP*	US2G*	US4*	US10*	US32D	SP313*
BHMA	600	603	606	612	630	695

** not available on LP7*



LG10 Lock Guard

- Ideally suited for use with rose or escutcheon 2-3/4" wide or less.
- For use with Type 86 Mortise and Type 161 Cylindrical Locks (ANSI 156.13 Series 1000 and ANSI 156.2 Series 4000).
- No exposed fasteners on face of unit.
- Unique design provides maximum security, virtually eliminating the opening between door and frame at the latch point.
- Available in 13 Gauge Stainless Steel or 12 Gauge Steel.

Dimensions

2-1/2" Wide x 9-1/2" High

Stud center to center: 8-1/2"

Finishes

Ives Number	USP	US32D
BHMA	600	630



LG11 Lock Guard

- Designed for use on aluminum doors with latch-type locks or doors equipped with electric strikes.
- Unit is Handed - Specify left or right hand when ordering.
- No exposed fasteners on face of unit.
- Unique design provides maximum security, virtually eliminating the opening between door and frame at latch point.
- Available in 13 Gauge Stainless Steel or 12 Gauge Steel.

Dimensions

2-1/2" Wide x 9-1/2" High

Stud center to center: 8-1/2"

Finishes

Ives Number	US32D	SP313
BHMA	630	695



LG12 Lock Guard

- Narrow design unit for use on rose or escutcheon 3-1/2" or less.
- For use with Type 86 Mortise and Type 161 Cylinder Locks (ANSI 156.13 Series 1000 and ANSI 156.2 Series 4000).
- No exposed fasteners on face of unit.
- Unique design provides maximum security, virtually eliminating the opening between door and frame at the latch point.
- Available in 13 Gauge Stainless Steel or 12 Gauge Steel

Dimensions

1-1/2" Wide x 9-1/2" High

Stud center to center: 8-1/2”

Finishes

Ives Number	USP	US32D
BHMA	600	630



8200 Push Plate
8300 Pull Plate, Prep for Pull (less pull)

Available Sizes
3" x 12"
3.5" x 15"
4" x 16"
6" x 16"
8" x 16"
Special sizes are available. Consult factory.

Plates Cut for Cylinder or Thumbturns

Plates are available with cutout for cylinder or thumbturn; standard cutout is 2" from top and centered on plates up to 4" wide. For plates wider than 4" cutout is located 2" from outer edge, specify LH or RH. When pull location interferes with standard cutout location a detail drawing should be furnished with the order.

Standard cutout is 1-1/4" for cylinder and 3/8" for thumbturn.

Specify CFC for cutout for cylinder or CFT for cutout for thumbturn.

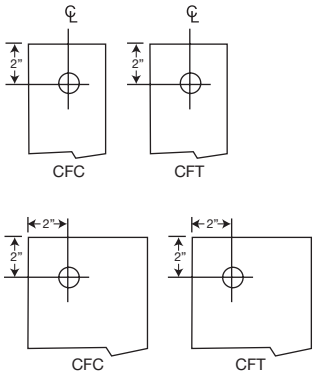

Finishes *brass*

US Number	US3	US4	US10	US10B	US15	US26	US26D*
BHMA	605	606	612	613	619	625	626

Finishes *stainless steel*

US Number	US32D*
BHMA	630

Finishes *aluminum*

US Number	US28
BHMA	628

** Available with Antimicrobial Coating, use suffix AM*

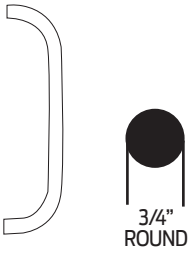



8302 Pull plate

Available mounting – Standard, F, G, H-I-L, or J see pages B15 and B16
Pulls have new heavy duty 5/16-18" mounting.

8300 Plate	**8102 Pull**
3-1/2" x 15"	6" centers
4" x 16"	8" centers
6" x 16"	10" centers

Finishes *brass*

US Number	US3	US4	US10	US10B	US26	US26D*
BHMA	605	606	612	613	625	626

Finishes *stainless steel*	
US Number	US32D*
BHMA	630

Finishes *aluminum*	
US Number	US28
BHMA	628

** Available with Antimicrobial Coating, use suffix AM*

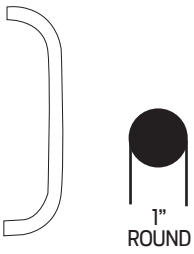



8303 Pull plate

Available mounting – Standard, F, G, H-I-L, or J see pages B15 and B16
Pulls have new heavy duty 3/8-16" mounting.

8300 Plate	**8103 Pull**
3-1/2" x 15"	8" centers
4" x 16"	10" centers
6" x 16"	7" centers

Finishes *brass*

US Number	US3	US4	US10	US10B	US26	US26D*
BHMA	605	606	612	613	625	626

Finishes *stainless steel*	
US Number	US32D*
BHMA	630

Finishes *aluminum*	
US Number	US28
BHMA	628

** Available with Antimicrobial Coating, use suffix AM*

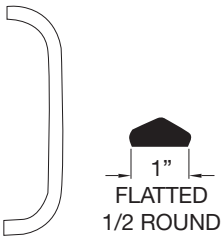



8305 Pull plate

Available mounting – Standard or F see page B15
Pulls have 1/4 - 20" mounting

8300 Plate	**8105 Pull**
3-1/2" x 15"	6" centers
4" x 16"	8" centers
6" x 16"	10" centers

Finishes *brass*

US Number	US3	US4	US10	US10B	US26	US26D
BHMA	605	606	612	613	625	626

Finishes *stainless steel*	
US Number	US32D
BHMA	630

Finishes *aluminum*	
US Number	US28
BHMA	628

** Available with Antimicrobial Coating, use suffix AM*



COR

Series Bar Coodinators

- The COR Series Coordinators are designed for use on pairs of doors when one door needs to close before the other.
- All COR units function easily. The active door lever, located nearest to the active stop, holds the active door open until the trigger mechanism is released by the closing of the inactive leaf.
- All COR units may not function correctly with swingclear hinges.
- All COR units are equipped with an adjustable override feature which allows the active door to close under extreme pressure.
- All COR units are compatible with Flush Bolts.
- The COR Series is available in five sizes for variable door opening widths.
- The COR Series does not cover the entire length of the stop, so a FL filler bar can be provided to maintain architecturally clean lines.
- COR Series Coordinator Channels and FL fillers are made of aluminum.
- Optional Filler Bars: FL20 - 20", FL32 - 32" and FL44 - 44", available to maintain clean line.
- Optional Mounting Brackets available: MB1, MB2, MB1F, MB2F, MB3F, MB1V, MB2V, and MB3V for other stop applied hardware.

Meets ANSI/BHMA A156.3, Type 21A.
UL Listed for installation on labeled frame.

For Openings Where Doors Are Same Size

Coordinator Number	Length of Channel	For Opening Widths	Common Applications
COR32	32"	34" - 52"	Pair of 2'0" Doors
COR42	42"	52" - 72"	Pair of 2'6" Doors
COR52	52"	62" - 92"	Pair of 3'0" Doors
COR60	60"	70" - 108"	Pair of 3'6" Doors
COR72	72"	84" - 132"	Pair of 4'0" Doors

For Openings Where Doors Are Unequal Size

The coordinator length should equal the active door width plus approximately 1/2 the inactive door width. The coordinator must be 6" longer than the active door width and shorter than the overall frame opening between stops.

Finishes

Ives Finish	US28	US26D	315AN
BHMA	628	713	711



FL

Series Filler Bars

- The FL Filler Bars are available in three sizes for variable frame openings.
- FL Filler Bars are made of aluminum
- FL Filler Bars are field sized to frame opening.

Filler Bar Number	Length	Dimensions
FL20	20"	1-5/8" W x 5/8" D x 20" L
FL32	32"	1-5/8" W x 5/8" D x 32" L
FL44	44"	1-5/8" W x 5/8" D x 44" L

Finishes

Ives Finish	US28	US26D	315AN
BHMA	628	713	711

MB1and MB2

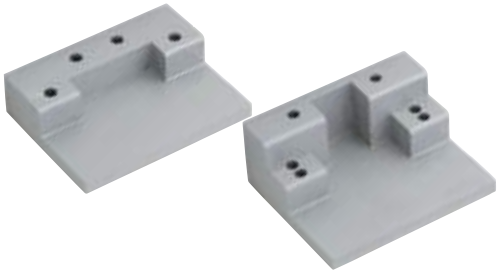

Mounting Brackets

- Allows stop mounted hardware to be properly installed without damaging the COR coordinator, such as a parallel arm closer or a non-fire-rated surface vertical rod strike.
- Stop mounted hardware will need to be lowered to compensate for the height of the coordinator and mounting bracket.
- MB mounting brackets are made of aluminum

Product	Jamb Depth	Stop Width	Dimensions
MB1	4-3/4" Min.	Over 2-1/2"	4" W x 3" D x 15/16" T
MB2	4-3/4" Min.	Up to 2-1/2"	4" W x 3-1/4" D x 1-5/8" T

Finishes

Ives Finish	USP	SP28	SPBLK
BHMA	600	689	622

MB1F, MB2F and MB3F
MB1V, MB2V and MB3V



MB1V



MB2V



MB3V

Fire Rated Mounting Brackets

- Allows for fire-rated stop mounted hardware to be properly installed without damaging the COR Coordinators, such as fire-rated surface vertical rod exit device strikes.
- Latch will need to be lowered to compensate for the height of the coordinator and mounting bracket.
- MB-V are designed for Von Duprin 8827-F soffit latch.
- Mounting brackets are made of steel.

Product	Jamb Depth	Stop Width	Dimensions
MB1F	5"	1-1/2" - 2-1/4"	4" W x 3" D x 1-5/8" T
MB1V	5"	1-1/2" - 2-1/4"	4" W x 3" D x 1-5/8" T
MB2F	5-7/8"	2-3/8" - 3-1/4"	4"W x 4" D x 1-5/8"T
MB2V	5-7/8"	2-3/8" - 3-1/4"	4"W x 4" D x 1-5/8"T
MB3F	6-7/8"	Over 3-3/8"	4"W x 3-1/2" D x 1"T
MB3V	6-7/8"	Over 3-3/8"	4"W x 3-1/2" D x 1"T

Finishes

Ives Finish	USP	SP28	SPBLK
BHMA	600	689	622

COR7G and COR9G

Gravity Coordinators



Meets ANSI/BHMA A156.3, Type 21.
UL Listed for Fire Doors.

- When active door is open, coordinator prevents active door from closing until inactive door bypasses. Closing of inactive door causes strike plate on top of door to contact cam and lift arm, allowing active door to close. As inactive door continues closing, roller rides over strike plate on to door bracket, holding arm above active door.
- Non-handed.
- Gravity action arm and door bracket are adjustable on the job for ease of installation. Rubber roller provides quiet and efficient operation, and helps protect the astragal and doors from damage.
- Nylon roller on short arm glides smoothly over door bracket and strike, ensuring silent operation.
- Made of forged brass.
- COR7G for use on pairs of doors with astragal on active door up to 4' or with astragal on inactive door up to 3'4" or with astragal on both doors up to 2'10"
- COR9G for use on pairs of doors with astragal on active over 4' or with astragal on inactive door over 3'4" or with astragal on both doors over 2'10"

Product	Projection
CORG7G	7"
CORG9G	9"

Finishes

Ives Finish	US3	US4	US10	US10B	US26	US26D
BHMA	605	606	612	613	625	626

CB1 Carry Bar



Meets ANSI/BHMA A156.3, Type 21.

- Used when it is possible for the inactive door to be opened before the active door.
- Prevents damage to the doors and other hardware.
- Nylon roller insures quiet and efficient operation.
- Non-handed.
- All-steel construction.
- Standard sex bolts for mounting.

Finishes

Ives Finish	US3	US4	US10	US10B	US26	US26D	SPBLK	USP
BHMA	605	606	612	613	625	626	622	600

How to Order COR and Accessories

COR 52 US28 FL20 D 36"

COR Size:
32, 42, 52, 60, 72

Finishes:
US28, US26D, 315AN

Filler Bar (if desired):
FL20, FL32, FL44

Vertical Rod Exit Device Cutout Type (if applicable):
A, B, C, D, E, F, G
If other Vertical Rod Exit Device not listed on chart, from page C16, include information as shown on page C16.

Active Door Size – Required for ALL Vertical Rod Exit Device Applications

To determine the size COR you need:

1. Start with the active door width (X).
2. Next consider the overall frame opening between stops (F).
3. Preferably, the coordinator would equal the active door width (X) + approximately 1/2 inactive door width (Y). The coordinator must be 6" longer than the active door width (X) and less than the overall frame opening between stop (F).

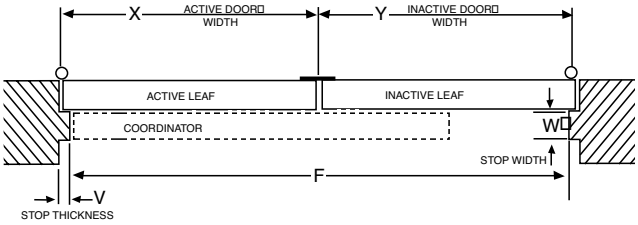

Examples:

- Pair of 30" Doors, 5/8" Stops
  Active Door Size, X = 30"
  Overall Frame Opening between Stops, F = 58-3/4"
  Recommended Coordinator: COR42

- Pair of 36" Doors, 5/8" Stops
  Active Door Size, X = 36"
  Overall Frame Opening between Stops, F = 70-3/4"
  Recommended Coordinator: COR52

- 36" Active Door, 18" Inactive door, 5/8" Stops
  Active Door Size, X = 36"
  Overall Frame Opening between Stops, F = 52-3/4"
  Recommended Coordinator: COR42

- 48" Active Door, 24" Inactive Door, 5/8" Stops
  Active Door Size, X = 48"
  Overall Frame Opening between Stops, F = 94-3/4"
  Recommended Coordinator: COR60

Special Factory Preparation for Use with Vertical Rod Exit Devices

Coordinators may need to be prepared at the factory for use with some surface or concealed vertical rod exit devices. (See Chart below)

If the exit device is not listed the following information is needed.

1. Exit Device Manufacturer and Model No.
2. Active Door Size, "X"
3. Inactive Door Size, "Y"
4. Exit Device Backset, "U"
5. Stop Width, "W"
6. Stop Thickness if other than 5/8", "V"

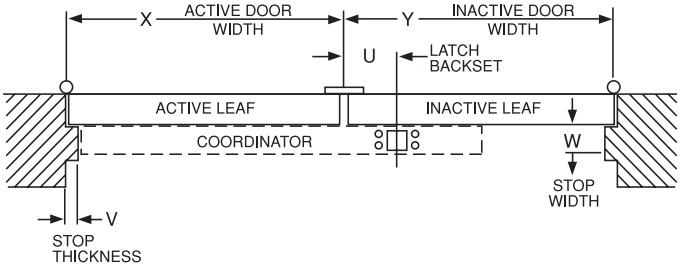

Exit Device Manufacturer	Exit Device Number	Device Backset	Maximum Active Door	Coordinator Size Needed	Coordinator Cutout Type	Mounting Bracket Needed
Von Duprin	5547-F	2-3/8"	33" 43" 51" 63"	42" 52" 60" 72"	Type A	None
Von Duprin	8827-F	2-3/4"	33" 43" 51" 63"	42" 52" 60" 72"	Type B	MB1V, MB2V or MB3V *see page C3*
Von Duprin	8847-F	2-3/8"	33" 43" 51" 63"	42" 52" 60" 72"	Type C	None
Von Duprin	33/3547 33/3547-F 98/9947 98/9947-F	2-3/4"	33" 43" 51" 64"	42" 52" 60" 72"	Type D	None
Von Duprin	33/3548 33/3548-F 98/9948 98/9948-F	2-3/4"	33" 43" 51" 64"	42" 52" 60" 72"	Type D	None
Von Duprin	33/3547WDC 33/3547WDC-F 98/9947WDC 98/9947WDC-F	1-5/16"	34" 44" 52" 65"	42" 52" 60" 72"	Type E	None
Falcon	17-C F-17-C 18-C F-18-C XX-C F-XX-C 24-C F-24-C 25-C F-25-C	2-3/4"	33" 43" 51" 63"	42" 52" 60" 72"	Type F	None
Falcon	17-C-WDC F-17-C-WDC 18-C-WDC F-18-C-WDC XX-C-WDC F-XX-C-WDC 24-C-WDC F-24-C-WDC 25-C-WDC F-25-C-WDC	2-13/16"	33" 43" 51" 63"	42" 52" 60" 72"	Type G	None

100 Series Concealed Overhead Door Holders/Stops



100 Series Heavy-Duty

Glynn-Johnson offers a complete line of overhead door holders and stops, accommodating virtually all openings with solutions for even the most complex door control problems. These concealed holders and stops provide the most attractive and reliable heavy-duty door control available.

Glynn-Johnson 100 series holders and stops provide the most reliable and versatile concealed overhead door control. They are designed for installation on virtually all types of doors mounted on conventional type butt hinges, pivots, continuous hinges, swing clear hinges and numerous other specialty hinges. When used in conjunction with many surface-applied door closers, 100 series holders and stops provide the most effective control for entrance doors and vestibule doors of all types, as well as heavy or often used interior doors. Templates provided allow for variable mounting positions, ranging from 85° - 110° of opening.

Five Models:
- 100H Series Hold-Open Model
- 100HP Series Internal Hold-Open Model
- 100F Series Friction Hold-Open Model
- 100S Series Stop-Only Model
- 100SE Series Special Stop-Only Model

Six Sizes:
- Each model comes in six sizes.
- Simple
- Standardized

Three Options:
- ADJ—Adjustable Jamb Bracket
- CJ—Jamb Bracket for use with LCN5030 Closer
- SOC—Pin-in-Socket Security Screw Package

Unmatched Convenience:
- Non-handed
- Improved Compatibility with Door Closers
- Single/Double-Acting Doors
- Interior/Exterior Applications
- Reduced Door Prep
- Durable
- Improved Corrosion Resistance
- Function Conversion Kits are Available.

Materials and Finishes:
In Heavy Gauge Brass or 300 Series Stainless Steel, these models offer the broadest range of finishes in the industry, complementing any design and offering the highest resistance to corrosion. Available in the following finishes:

Finishes	Description
US3	Polished Brass
US4	Satin Brass
US10	Satin Bronze
US10B	Oil Rubbed Bronze
US32	Polished Stainless Steel
US32D	Satin Stainless Steel
SP4	Powder Coat Brass
SP10	Powder Coat Bronze
SP28	Powder Coat Aluminum
SP313	Powder Coat Dark Bronze
SPBLK	Powder Coat Black

Models

These models provide a wide range of optional features, and are ideal for use on entrance and vestibule doors, large doors, doors opened frequently, or doors subject to abuse. These models are also furnished with an offset-style jamb bracket.

Designed for heavy-duty applications, 100 series models will provide long-lasting protection to doors, frames, hinges, related hardware and surrounding walls or obstructions.

100H Series Hold-Open

(Suffix H) The Hold-Open function should be used where it is desired to hold a door open at a predetermined position for short or long periods of time, permitting an unobstructed traffic flow through the opening.

These models are both selective and adjustable, featuring the most reliable Hold-Open mechanism available. They feature a control knob which protrudes from the face of the door and turns the Hold-Open function on or off. Set in the inactive position, the unit acts as a stop and shock absorber. The tension on the Hold-Open mechanism can be adjusted using an allen wrench to offset air currents or other exterior conditions. The Hold-Open tension adjustment is located in the bottom of the track in the top of the door.

100HP Series Internal Hold-Open

These models provide a Hold-Open unit with the Hold-Open mechanism built into the channel, thus reducing the door prep. The 100HP have a preset Hold-Open force that is not adjustable. The Hold-Open feature is not selectable in these units, so the doors are always held open.

100F Series Friction Hold-Open

(Suffix F) Friction Hold-Open models provide an alternative holding method, ideal for heavy patient room doors, closet doors or similar applications where multiple Hold-Open positions are desired. The friction tension is adjusted using an allen wrench and an open end wrench. The friction tension adjustment is located on the top of the slider in the channel.

100S Series Stop-Only

(Suffix S) When the Hold-Open function is not required, the Stop-Only function provides the same effective door control minus the Hold-Open feature. The Stop-Only model may be used on fire doors.

100SE Series Special Stop-Only

(Suffix SE) When Stop-Only models are used in conjunction with single point Hold-Open electronic door closers, they may be ordered without the shock-absorbing mechanism. Used as an auxiliary stop with these closers, they will prolong the life of the closer. The stop location is adjusted using an allen wrench on the stop block located in the channel.

Note: Caution should be used when using this option in other applications, as the elimination of the shock-absorbing spring can put added stress on door and frame if used improperly.

Application Information

UL Classification

The 100 series Stop-Only models are classified by Underwriters Laboratories (UL) as Miscellaneous Fire Door Accessories. This classification applies to use on either Hollow Metal Fire Doors or Wood Fire Doors. Where Wood Door manufacturer's listing allows for the cutout required for installation, concealed overhead stops may be used on those wood fire doors. These units may be used on doors of any rating. As a reminder, the Miscellaneous Fire Door Accessories (GVUX) section is defined by UL as: "Miscellaneous fire door accessories are intended in the individual Listings. The accessories have been investigated to determine that when installed in accordance with the manufacturer's instructions, the accessories do not adversely affect the fire rating of the fire door and/or fire door frames."

Dead Stop Templating:

If a wall or similar obstruction is in place at 110° or less opening angle (i.e. doors that open back-to-back), Dead Stop Templating should be used. This includes all Hold-Open, Friction and Stop-Only models, except when the "SE" Option is used. The Dead Stop position is reached when the shock-absorbing spring is fully compressed, the initial degree of opening will be 5° to 7° less than the Dead Stop opening.

Example: If the holder is templated to 100° Dead Stop, the door will hold open somewhere between 93° and 95°, but no further than 100°.

Note: Do not use dead-stop templating on the 100SE Series since there is no shock-absorbing spring.

Environmental Considerations:

Environmental factors should always be considered when specifying overhead holders and stops. Doors that are positioned on a building's exterior or subject to corrosive conditions should be equipped with a holder constructed primarily of stainless steel or brass materials. For interior applications, steel is acceptable, though brass substrates generally provide a more attractive architectural-grade finish.

Function Conversion Kits

- FK100F—Converts a 100H or 100S unit into a 100F unit. To order specify FK100F.
- FK100H—Converts a 100F or 100S unit into a 100H unit. To order specify FK100H.
- No kit is needed to convert a 100H or 100F unit into a 100S unit.

Options

Suffix ADJ (Adjustable Jamb Bracket):

An additional option on the 100 series is the adjustable jamb bracket, which allows the degree of Hold-Open or Stop angle to be adjusted after installation. Suffix "ADJ" is available in all functions, but only in sizes 3, 4, 5 & 6. ADJ jamb bracket requires additional frame prep. The ADJ option cannot be added to an existing unit, it must be factory ordered.

Suffix CJ (Closer Jamb Bracket):

Provides a special jamb bracket needed for 100 series units used with LCN5030 closers. These special jamb brackets are handed, so handing will need to be specified when ordering the "CJ" option, CJLH for a left hand door and CJRH for a right hand door. The CJ option cannot be added to an existing unit, it must be factory ordered.

Suffix SOC (Pin-in-Socket Security Screw Package):

A screw package with pin-in-socket screws for mounting the jamb bracket to the frame is provided instead of the standard screw package.

100 Series Concealed Overhead Door Holders/Stops

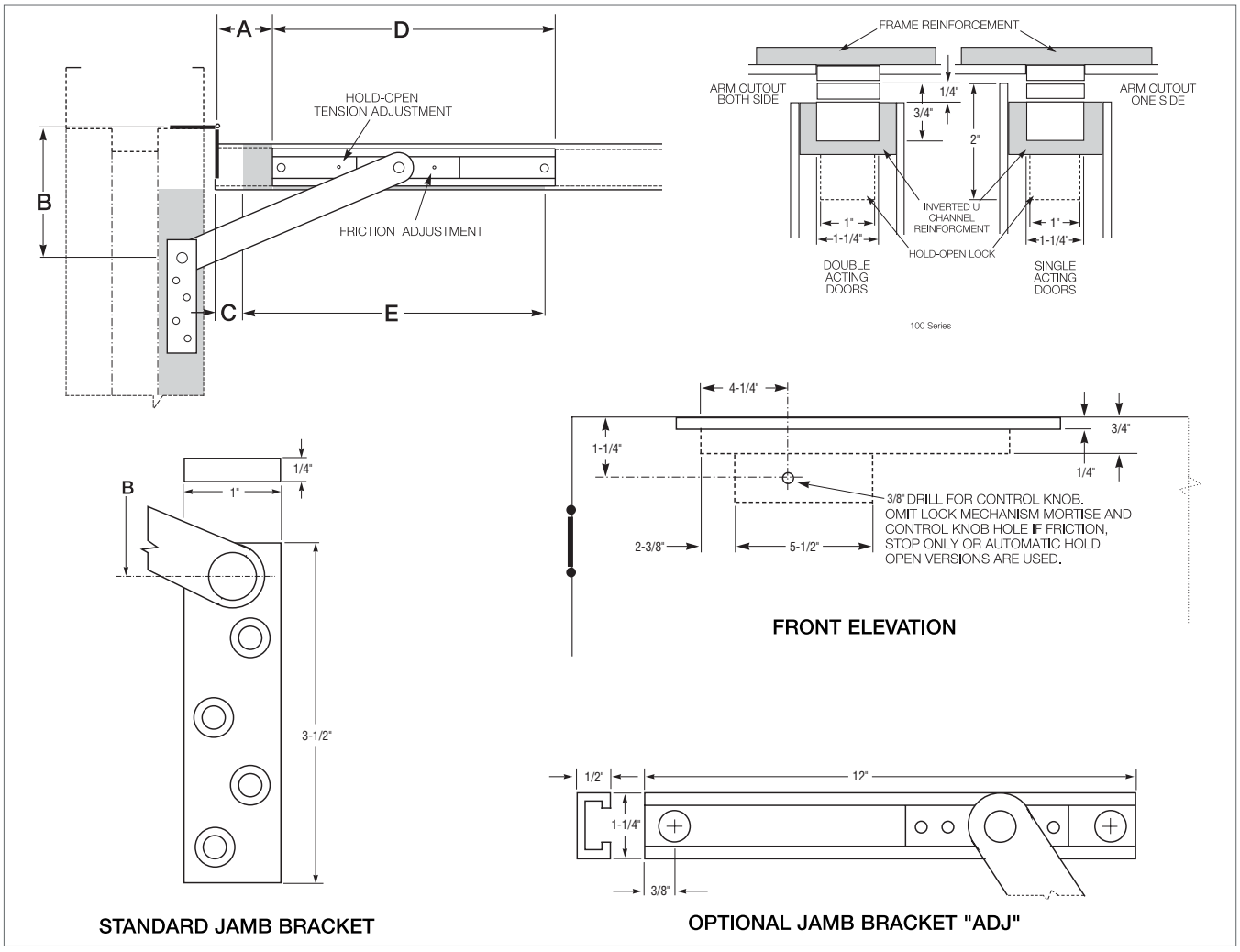

100 Series Sizing Chart								
BUTTS/OFFSET PIVOTS					**CENTER HUNG**			
SIZE	**DOOR OPENING**	**STOP ONLY**	**HOLD OPEN**	**FRICTION**	**DOOR OPENING**	**STOP ONLY**	**HOLD OPEN**	**FRICTION**
1	18"–23"	101S*	101H*	101F*	-----	----	----	----
2	23-1/16"–27"	102S*	102H*	102F*	-----	-----	-----	-----
3	27-1/16"–33"	103S	103H	103F	33-1/16"–39"	103S	103H	103F
4	33-1/16"–39"	104S	104H	104F	39-1/16"–45"	104S	104H	104F
5	39-1/16"–45"	105S	105H	105F	45-1/16"–51"	105S	105H	105F
6	45-1/16"–54"	106S	106H	106F	51-1/16"–59"	106S	106H	106F

Note: This chart illustrates the most common types of hinging and door opening sizes. For unusual door details, contact Glynn-Johnson for availability.

**These sizes are not available for use with offset pivots. Also not available with the ADJ option.*

BHMA/ANSI, A156.8 & FED. Spec. Cross Reference		
G-J Model	**BHMA***	**FED. Spec.**
101-106 H	C01511	1160
101-106 S	C01541	----
101-106 F	C01531	----

** First numeral (0) designates optional material.*

To specify:
Brass material, change 0 to 1 (i.e. C11511)
Stainless Steel material, change 0 to 5 (i.e. C51511)

BHMA

All 100 series models are designed for heavy-duty applications and far exceed BHMA cycle test and force test requirements for Grade 1 holders and stops.

The template information on this page is for reference only and is not intended to serve as an installation template. For complete dimensional information, refer to Glynn-Johnson template book.



How to Order

10 4 H – US26D – ADJ

Overhead Series:
- **10**

Size (Door Opening Using Butts or Offset Pivots:
- **1** (18"–23")
- **2** (23-1/16"–27")
- **3** (27-1/16" –33")
- **4** (33-1/16"–39")
- **5** (39-1/16"–45")
- **6** (45-1/16"–54")

Function:
- **H** Hold-Open
- **HP** Internal Hold-Open
- **F** Friction Hold-Open
- **S** Stop-Only
- **SE** Special Stop-Only

Finishes:
- **US3** Polished Brass
- **US4** Satin Brass
- **US10** Satin Bronze
- **US10B** Oil Rubbed Bronze
- **US32** Polished Stainless Steel
- **US32D** Satin Stainless Steel
- **SP4** Powder Coat Brass
- **SP10** Powder Coat Bronze
- **SP28** Powder Coat Aluminum
- **SP313** Powder Coat Dark Bronze
- **SPBLK** Powder Coat Black

Options:
- **ADJ** Adjustable Jamb Bracket
- **CJLH** Special Jamb Bracket for LCN 5030 Closer, LH Door
- **CJRH** Special Jamb Bracket for LCN 5030 Closer, RH Door
- **SOC** Pin-in-Socket Security Screws

LCN®

Surface mounted closer

4010 Series



Overview

The 4010 is LCN's best performing heavy duty closer designed specifically for institutional and other rugged high traffic applications.

Cylinder

4011(6)-3071
Cast iron cylinder assembly

Handing
Handed

Sizing
Adjustable 1-5 or sized 6

- 4011 (adjustable from size 1 to 5)
- 4016 (Size 6, DEL not available)

Available cylinder options

DEL	Delayed action cylinder

Mounting

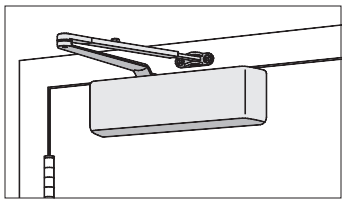

Hinge (pull side)

ALLEGION™

Finishes

Powder coat finishes

689
Aluminum

690
Statuary Bronze

691
Light Bronze

693
Black

695
Dark Bronze

696
Brass

150+ additional custom colors available using the RAL numbering system

Metal plated finishes

632
Bright Brass

633
Satin Brass

639
Satin Bronze

616
Satin Bronze, Blackened

646
Satin Nickel

651
Bright Chrome

652
Satin Chrome

Available finish options

MTLPC	Brite metallic: Custom powder coat finish, which resembles that of 651 or 652 plated finish.
SRI	For installations where a higher level of protection against weather conditions, or the effects of a potentially corrosive atmosphere is required, LCN offers a special rust inhibiting (SRI) process. Ferrous metal components receive an SRI pretreatment and a standard powder coat finish of your choice, or a custom powder coat finish for a nominal additional cost. Closers treated with the SRI process exceed the 100 hour protection level available with standard LCN powder coated finishes.

Covers

Standard cover



4010-72
Plastic cover
- Non-handed

Optional cover



4010-72MC
Metal cover
- Handed
- Required for plated finishes and custom powder coat finishes
- Optional

Arms



4010-3077
Regular arm
- Non-handed



4010-3049
Hold-open arm
- Handed
- Provides hold-open function, adjustable at elbow
- Optional



4010-3049FL
Fusible link arm
- Handed
- Releases hold-open function when exposed to temperatures above 165° F. 1/8″ (3 mm) maximum reveal
- Optional
- NOTE: Check local codes before specifying FL arms. NOT A life safety product!

Installation accessories



4010-18
Plate
- Required where top rail is less than 3 3/4" (95 mm)
- Requires minimum 2" (51 mm) top rail

Fasteners

Self-reaming and tapping screws included standard

Fastener pack options

TBSRT	TB[1] with self-reaming and tapping screws
WMS	Wood and machine screw
TBWMS	TB[1], wood and machine screw
TORX	TORX machine screw
TBTRX	TB[1] and TORX machine screw

1 Specify door thickness if other than 1 3/4"

Dimensions and mounting

Hinge (pull) side mounting

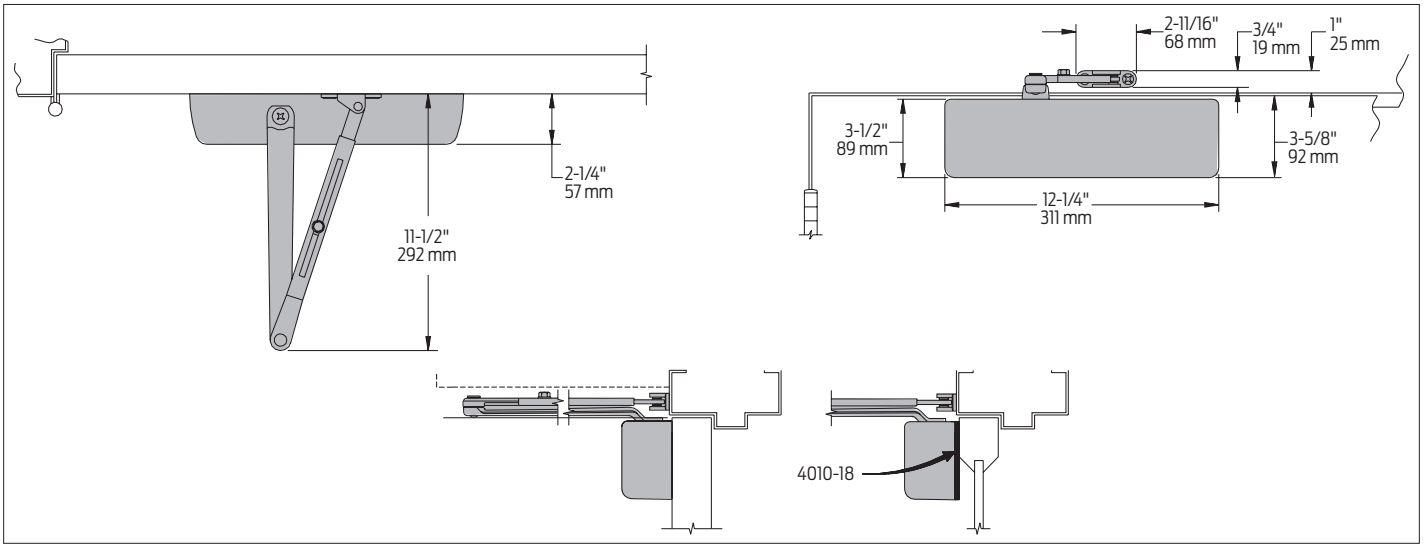

Specifications

Accessibility	Available with less than 5.0 lbs. opening force on 36" door
Certifications/ approvals	▪ Grade 1 - ANSI A156.4 ▪ UL 10C ▪ Meets BAA - Buy American Act
Degree of operation	Hinge (pull) side Max opening: 140° Hold open: 140°
Environmental conditions	▪ Approved for interior use ▪ Approved for exterior use (SRI coated only) ▪ LCN's standard all weather fluid performs to temperature ranges from 120°F (49°C) to -30°F (-35°C) ▪ LCN's powder coat finish surpasses 100 hours of salt spray which is over four times the ANSI standard for corrosion resistance.
Warranty	30 years
Standard features	▪ Cast iron body ▪ Full complement bearing ▪ 1 1/2" diameter piston ▪ 11/16" diameter double heat treated pinion journal

© 2020 Allegion
013104, Rev. 1/2020
www.allegion.com/us

ALLEGION™

LCN®

Surface mounted closer

4110 Series



Overview

The 4110 is LCN's best performing heavy duty closer with an adjustable spring and possible hold-open point beyond 140 degrees, meeting ADA requirements. Backed by a 30 year warranty, the cast iron body and all weather fluid offer versatility in high traffic applications.

Cylinder

4111(6)-3071
Cast iron cylinder assembly

Handing
Handed

Sizing
Adjustable spring size 1-5, or sized 6
Includes patented Green Dial
- 4111 (adjustable from size 1 to 5)
- 4116 (Size 6; DEL, SHCUSH or HCUSH arm not available)

Available cylinder options

DEL	Delayed action cylinder
AVB	Advanced variable backcheck

Mounting

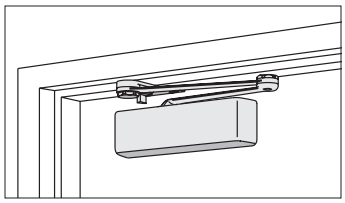

Parallel arm (push side)

ALLEGION™

Finishes

Powder coat finishes

689
Aluminum

690
Statuary Bronze

691
Light Bronze

693
Black

695
Dark Bronze

696
Brass

150+ additional custom colors available using the RAL numbering system

Metal plated finishes

632
Bright Brass

633
Satin Brass

639
Satin Bronze

616
Satin Bronze, Blackened

646
Satin Nickel

651
Bright Chrome

652
Satin Chrome

Available finish options

MTLPC	Brite metallic: Custom powder coat finish, which resembles that of 651 or 652 plated finish.
SRI	For installations where a higher level of protection against weather conditions, or the effects of a potentially corrosive atmosphere is required, LCN offers a special rust inhibiting (SRI) process. Ferrous metal components receive an SRI pretreatment and a standard powder coat finish of your choice, or a custom powder coat finish for a nominal additional cost. Closers treated with the SRI process exceed the 100 hour protection level available with standard LCN powder coated finishes.

Covers

Standard cover



4110-72
Plastic cover
- Non-handed
- Standard

Optional cover



4110-72MC
Metal cover
- Handed
- Required for plated finishes and custom powder coat finishes
- Optional

Arms



4110-3049EDA
Hold-open arm
- Handed
- Optional
- Provides hold-open function, adjustable at shoe



4110-3049FL
Fusible link arm
- Handed
- Releases hold-open function adjustable at shoe when exposed to temperatures above 165º F
- Optional
- NOTE: Check local codes before specifying FL arms. NOT A life safety product!



4110-3077CNS
Cush-N-Stop arm
- Non-handed
- Features solid forged steel main arm and forearm with built-in stop in soffit shoe



4110-3077EDA
Extra duty arm
- Non-handed
- Features forged, solid steel main and forearm for potentially abusive installations



4110-3077EDA/ 62G
Extra duty arm
- Non-handed
- Features forged, solid steel main and forearm for potentially abusive installations
- Optional 4110-62G thick hub shoe for blade stop clearance



4110-3049CNS
HCUSH arm
- Non-handed
- Provides hold-open function with templated stop/ hold-open points.
- Handle controls hold-open function



4110-3077SCNS
Spring CUSH arm
- Non-handed
- For abusive applications features solid forged steel main arm and forearm with spring loaded stop in the soffit shoe
- Optional



4110-3049SCNS
Spring HCUSH arm
- Non-handed
- For abusive applications features solid forged steel main arm and forearm with spring loaded stop in the soffit shoe
- Handle controls hold-open function
- Optional

Installation accessories



4110-18
Plate
- Required for push side mount where top rail is less than 5 1/8″ (130 mm), measured from the stop
- Requires minimum 2″ (51 mm) minimum top rail



4110-30
CUSH shoe support
- Provides anchorage for fifth screw used with CUSH arm, where reveal is less than 3 1/16″ (78 mm)



4110-61
Blade stop spacer
- Lowers parallel arm shoe to clear 1/2″ (13 mm) blade stop



4110-419
PA flush panel adapter
- Provides horizontal mounting surface for CUSH shoe on single rabetted or flush frame

Fasteners

Self-reaming and tapping screws included standard

Fastener pack options

TBSRT	TB[1] with self-reaming and tapping screws
WMS	Wood and machine screw
TBWMS	TB[1], wood and machine screw
TORX	TORX machine screw
TBTRX	TB[1] and TORX machine screw

1 Specify door thickness if other than 1 3/4"

Dimensions and mounting

Parallel arm (push side) mounting

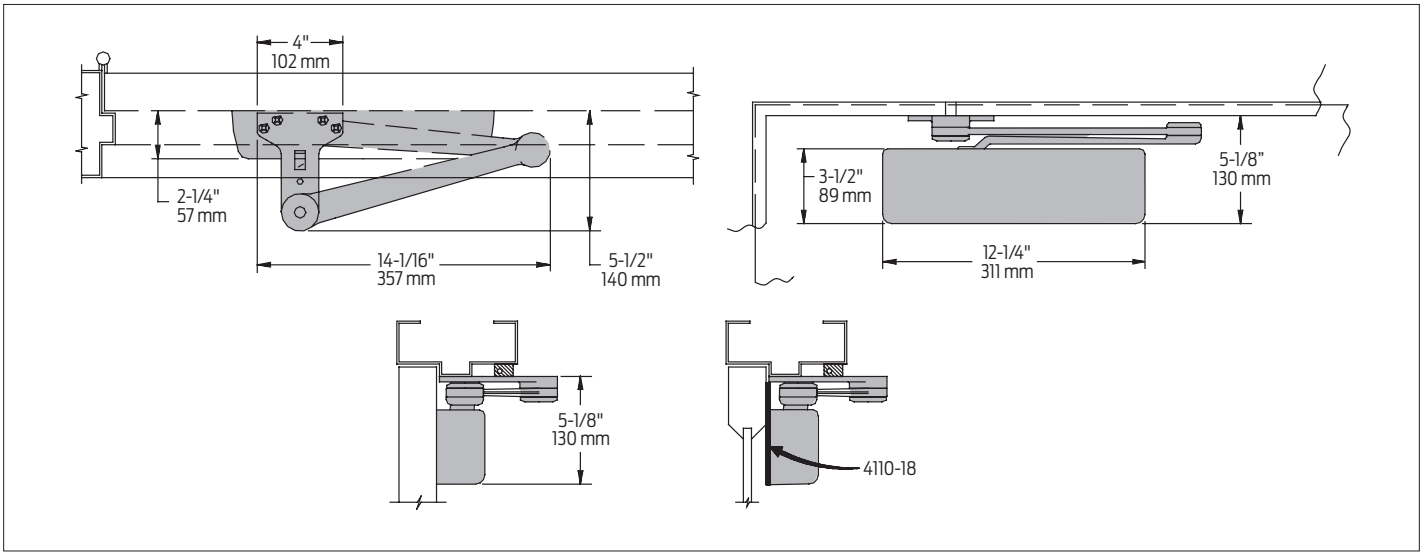

Specifications

Accessibility	Available with less than 5.0 lbs. opening force on 36" door
Certifications/ approvals	▪ Grade 1 - ANSI A156.4 ▪ UL 10C ▪ Meets BAA - Buy American Act
Degree of operation	EDA Max opening: 180° Hold open: 180° Cush Max opening: 110° Hold open: 110°
Environmental conditions	▪ Approved for interior use ▪ Approved for exterior use (SRI coated only) ▪ LCN's standard all weather fluid performs to temperature ranges from 120°F (49°C) to -30°F (-35°C) ▪ LCN's powder coat finish surpasses 100 hours of salt spray which is over four times the ANSI standard for corrosion resistance.
Warranty	30 years
Standard features	▪ Cast iron body ▪ Full complement bearing ▪ 1 1/2" diameter piston ▪ 11/16" diameter double heat treated pinion journal

© 2020 Allegion
013108, Rev. 1/2020
www.allegion.com/us

ALLEGION™

8400 Series Protection Plates

- Door protection plates are available in .050" thick brass, stainless steel or aluminum; and 1/8" thick high impact polyethylene in clear or black.
- Bevel edge options; specify B4E for all four edges.
- Mounting screw pack furnished standard, 16 screws per pack. Optional screw packs are available for TEK or TORK screw heads. Refer to the following chart for ordering.
- Specify NMH for no mounting holes. (Not available on 8402)
- Specify NMH-A for no mounting holes with adhesive. (Not available on 8402)
- Specify CS for counter sunk mounting holes.
- Specify ERS prepped with extra row of screws.

Kickplate Gasket Tape Tape is recommended when using a brass plate on a metal door to reduce tarnishing from electrolytic oxidation. One tape pack will cover an the perimeters of a 8" x 34" kickplate. Order 8401 Gasket Tape.

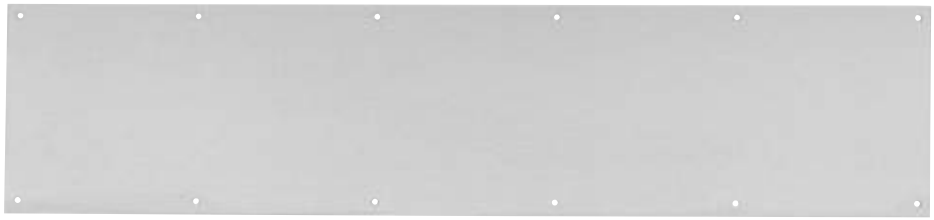

8400 Protection Plate
8402 (UL)* Protection Plate

**UL mark appears in upper right corner. Factory supplied screws must be used.*

Number of screw packs required by plate size (specify TEK Screws or TORK screws).

	22"-25"	26"-33"	34"-41"	42"-48"
4"-8"	1	1	1	1
9"-16"	1	1	1	1
17"-24"	1	1	1	2
25"-32"	1	1	2	2
33"-40"	1	2	2	2
41"-48"	2	2	2	2

Finishes *brass 24" x 48" max. size*

US Number	US3	US4	US10	US10B	US15	US26	US26D
BHMA	605	606	612	613	619	625	626

Finishes *stainless steel*

US Number	US32	US32D
BHMA	629	630

Finishes *aluminum*

US Number	US28
BHMA	628

Finishes *plastic*

Clear and Black

Residential Grade Kickplates available Carded only, finishes PA28, PA3, PA619, PA716, B3, B505, B619, B716

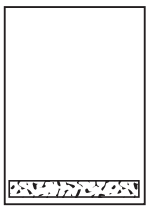

Mop Plates

- Protect the bottom of the pull side of door subject to cleaning and mopping procedures.
- Size Ranges:4" to 6" high, 22" to 48" wide

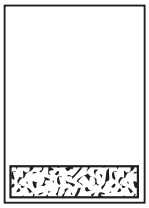

Kick Plates

- Protect the bottom of the push side of doors subject to scuffing from foot traffic.
- Recommended for all doors subject to normal use (especially doors using a closer).
- Size Ranges: 8" to 24" high, 22" to 48" wide

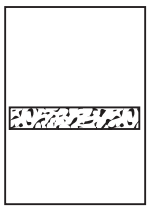

Stretcher Plates

- Protect doors at specific areas where consistent contact is made by stretchers, service carts or other equipment.
- Usually applied to push side of doors.
- Specify "B4E" Option for beveled edges.
- Size Ranges: 6" to 8" high, 22" to 48" wide

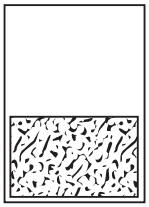

Armor Plates

- Protect lower half of doors from abuse by hard carts, trucks and rough usage.
- Usually applied to push side of single doors and both sides of double acting doors.
- Size Ranges: 26" to 48" high, 22" to 48" wide

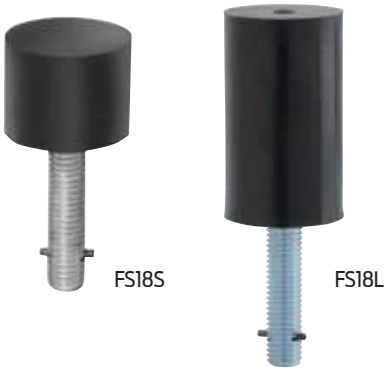

FS18S
FS18L Floor Stops

- Security Door Stops designed for use in high vandalism areas.
- Molded from black flame resistant, resilient material around a heavy-duty stud.
- Once grouted in concrete, leaves no exposed fasteners to be tampered with or removed.
- Ideal for jail or security cell areas where floor mounted stops are required.
- FS18L also ideal for concrete wall applications.

Dimensions

FS18S Height: 1-1/2”
FS18S Diameter: 2”
FS18S Stud Length: 2-1/2”

FS18L Height: 3-1/2”
FS18L Diameter: 2”
FS18L Stud Length: 2-1/2”



FS434 Floor Stop

- Burnished wrought steel.
- For undercut doors up to 1-1/2”.
- Packed with screws and plastic anchors.
- Replaceable soft, resilient gray rubber.

Dimensions

Overall Height: 2-5/8”
Base Size: 1-1/2” W x 2-3/4” L

Finishes

Ives Number	USC
BHMA	604



430 Floor Door Stop

- Burnished wrought steel.
- For undercut doors up to 1-1/2”.
- Packed with screws and plastic anchors.
- Replaceable soft, resilient gray rubber.

Dimensions

Overall Height: 1-5/16”
Base Diameter: 1-1/4”

Finishes *brass*

Ives Number	B3	B4	B5	B10B	B15	B26	B26D
BHMA	605	606	609	613	619	625	626

Finishes *aluminum*

Ives Number	A3*	A5	A14	A92
BHMA	666		669	673

** only available in Slim-Pak of 25*



WS406CVX & WS407CVX
Meets ANSI/BHMA 156.16 L22201 for brass, and L52101 for stainless steel.

WS406CCV & WS407CCV
Meets ANSI/BHMA 156.16 L22251 for brass and and L52251 for stainless steel.

WS406CVX Wall Bumpers
WS406CCV
WS407CVX
WS407CCV

- Constructed in sturdy yet economical wrought base of brass or stainless steel construction.
- Feature concealed tamper-proof mounting.
- Shipped factory preassembled backplate to reduce installation cost.
- Easy installation by inserting screwdriver through small hole in rubber.

WS406CVX (406) – convex rubber bumper, packed with wood screw and plastic anchor.
WS406CCV (406-1/2) – concave rubber bumper, which avoids damage to locks with projecting buttons, packed with wood screw and plastic anchor.
WS407CVX (407) – convex rubber bumper packed with screw and drywall anchor.
WS407CCV (407-1/2) – concave rubber bumper which avoids damage to locks with projecting buttons and is packed with screw and drywall anchor.

Dimensions

Base Diameter: 2-1/2"
Base Thickness: 3/8"
Overall Projection: 1"

Finishes *brass*

Ives Number	US3	US4	US5*	US10	US10B	US15	US15A**	US26	US26D	B716**
BHMA	605	606	609*	612	613	619	620	625	626	

Finishes *stainless steel*

Ives Number	US32D
BHMA	630

** only available on WS407CVX Slim-Pak of 15*

*** available on WS407CCV or WS407CVX Slim-Pak of 15*



Meets ANSI/BHMA 156.16, L11291 for brass and L31291 for aluminum.

WS40 Automatic Wall Holder

- Constructed of sturdy cast brass, or aluminum.
- Holder is mounted on wall and strike is mounted on door.
- Roller on holder rides up seats itself on strike, with a heavy duty bumper pad deadening the sound and shock.
- Universal screw pack accommodates all types wall construction.

Dimensions

Base Height: 2”
Base Width: 2-1/2”
Base Projection: 2-1/4”
Engaged Projection: 3-1/2”

Strike Height: 2-1/16”
Strike Width: 3/4”
Strike Projection: 2”

Finishes *brass*

Ives Number	US3	US4	US10	US10B	US26	US26D
BHMA	605	606	612	613	625	626

Finishes *aluminum*

Ives Number	US28
BHMA	628



WS45
Meets ANSI/BHMA 156.16, L11291 for brass and L31291 for aluminum.

WS45
WS45X Automatic Wall Holder

- Constructed of cast brass, bronze or aluminum.
- Spring loaded roller rides up the face of the strike, seating itself on the strike, holding the door firmly in the open position.
- A heavy rubber pad cushions the shock and absorbs the sound.
- With unit mounted on door and the strike on wall, vertical adjustment is available on body.
- The strike is adjustable 45 degrees left or right, both adjustments easily accomplished at time of installation or at a later date.

WS45 strike is furnished with wood screws for drywall mounting.

WS45X strike is furnished with a threaded stud and expansion shield for masonry type mounting.

Dimensions

Base Height: 3-11/16”
Base Width: 3”
Base Projection: 2”
Engaged Projection: 3-7/16”

Strike Diameter: 2-3/8
Strike Projection: 3”

Finishes *brass*

Ives Number	US3	US4	US10	US10B	US26	US26D
BHMA	605	606	612	613	625	626

Finishes *aluminum*

Ives Number	US28
BHMA	628



FS436
Meets ANSI/BHMA 156.16, L12141 for brass or bronze and L32141 for aluminum.



FS438
Meets ANSI/BHMA 156.16, L12141 for brass or bronze and L32141 for aluminum.

FS436 Dome Stop
FS438 Dome Stop

- FS436 for doors without threshold.
- FS438 for doors with threshold or undercut doors.
- Heavy-Duty Cast Dome Stops constructed of brass, bronze or aluminum.
- Packed with wood screw and plastic anchor.

Replaceable gray, non-marring rubber bumper.

Dimensions

FS436
Overall Height: 1"
Base Height: 3/16"
Base Diameter: 1-3/4" x 2" Oval

FS438
Overall Height: 1-3/8"
Base Height: 9/16"
Base Diameter: 1-3/4" x 2" Oval

Finishes *brass*

Ives Number	US3	US4	US5	US10	US10B	US15	US26	US26D	B716
BHMA	605	606	609	612	613	619	625	626	

Finishes *aluminum*

Ives Number	US28
BHMA	628



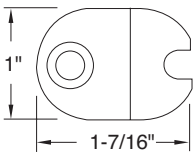

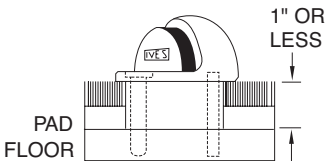

R435 Riser for FS436 Dome Stop
R437 Riser for FS438 Dome Stop

- Extruded aluminum, mill finish.
- R435 for conversion of FS436 Dome Stop to carpet installation.
- R437 For conversion of FS438 Dome Stop to carpet installation.
- Packed with wood screws, lead shield and stud.
  Specify Tampin (TPN) if required.

Dimensions

Available in 1/4", 3/8", 1/2", 5/8", 3/4" and 1" height.

2720 Tobey Drive, Indianapolis, IN 46219
Tel 1-877-671-7011 ▪ Fax 800-851-0000
Zero.Customer.Support@allegion.com
www.zerointernational.com

Part No: 188S

Part description: Self-adhesive weatherstripping

Notes:

Provided by:

Customer name:

Job no:

Date:

Image may not be shown to scale

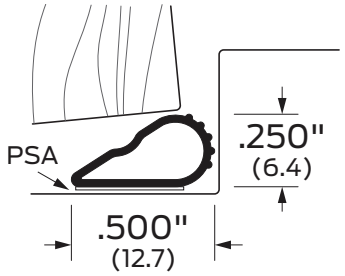

Notes:
PSA standard. 20-minute fire rating.

Certifications:

- Fire rated-UL10c
- Smoke and draft control
- Air Infiltration
- Sound

ANSI/BHMA:

188S R0E151

BHMA CERTIFIED

Finishes:

BK	Black
BR	Brown
CL	Clear
GY	Gray
WH	White

Options:

ZAG	Ligature resistant gasketing

© 2018 Allegion · 012809, Rev. 11/18 · **www.allegion.com/us**

2720 Tobey Drive, Indianapolis, IN 46219
Tel 1-877-671-7011 ▪ Fax 800-851-0000
Zero.Customer.Support@allegion.com
www.zerointernational.com

Part No:	Part description:
429	Head & jamb gasketing

Notes:	Provided by:	
Customer name:	Job no:	Date:

Image may not be shown to scale

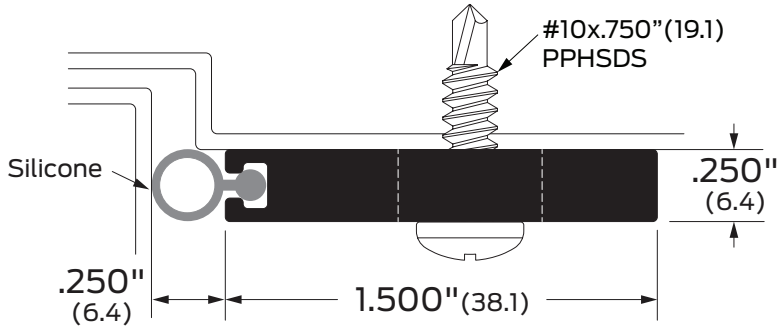

Notes:
Gasketing protection for closer bracket or door coordinator.

Certifications:

- Fire rated-UL10c
- Smoke and draft control

ANSI/BHMA:

429AA, 429BK, 429D, 429G R3E164

BHMA CERTIFIED

Finishes:

AA	Aluminum clear anodized
BK	Aluminum black anodized
D	Aluminum dark bronze anodized
G	Aluminum gold anodized

Options:

S	Order as a set
SEC	Security screws

© 2018 Allegion · 012741, Rev. 1/19 · **www.allegion.com/us**

2720 Tobey Drive, Indianapolis, IN 46219
Tel 1-877-671-7011 ▪ Fax 800-851-0000
Zero.Customer.Support@allegion.com
www.zerointernational.com

Part No:	Part description:
339W	Door sweep

Notes:

Provided by:

Customer name:

Job no:

Date:

Image may not be shown to scale

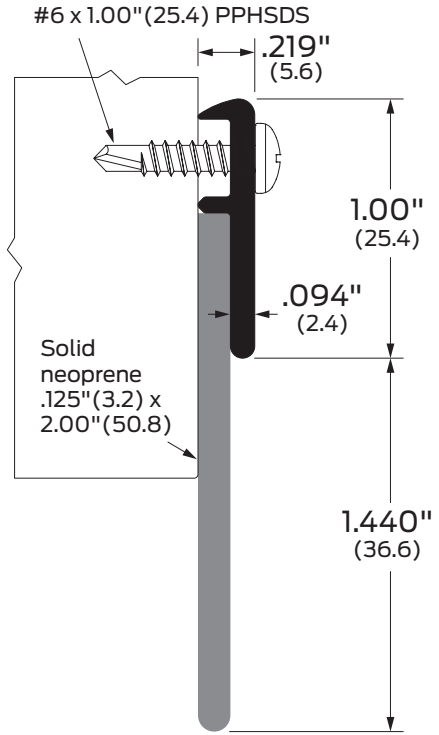

Certifications:

Fire rated-UL10c

ANSI/BHMA:

339WAA, 339WBK, 339WD, 339WG	R3B434
339WB	R1B434

BHMA CERTIFIED

Finishes:

AA	Aluminum clear anodized
BK	Aluminum black anodized
D	Aluminum dark bronze anodized
G	Aluminum gold anodized
B	Bronze, architectural mill finish
B-ORB	Oil-rubbed bronze

Options:

SEC	Security screws

© 2018 Allegion · 012656, Rev. 11/18 · **www.allegion.com/us**

ZERO INTERNATIONAL

2720 Tobey Drive, Indianapolis, IN 46219
Tel 1-877-671-7011 ▪ Fax 800-851-0000
Zero.Customer.Support@allegion.com
www.zerointernational.com

Part No:	Part description:
39	Door sweep

Notes:	Provided by:	
Customer name:	**Job no:**	**Date:**

Image may not be shown to scale

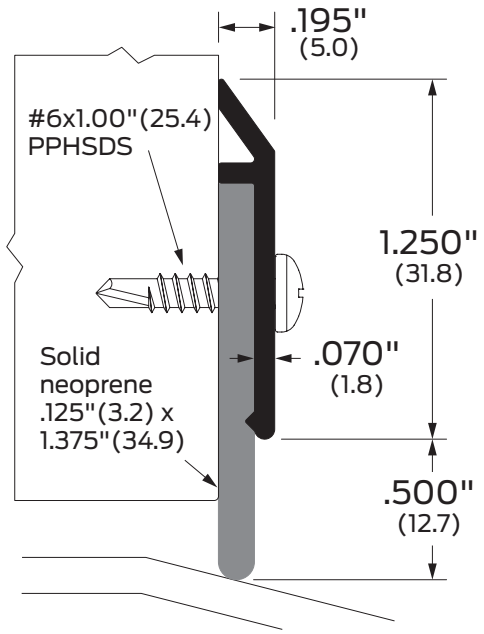

Certifications:

Fire rated-UL10c

ANSI/BHMA:

39A, 39BK, 39D, 39G R3B434

BHMA CERTIFIED

Finishes:

A	Aluminum mill finish
BK	Aluminum black anodized
D	Aluminum dark bronze anodized
G	Aluminum gold anodized

Options:

S	Order as a set
SEC	Security screws

© 2018 Allegion · 012652, Rev. 11/18 · **www.allegion.com/us**

2720 Tobey Drive, Indianapolis, IN 46219
Tel 1-877-671-7011 ▪ Fax 800-851-0000
Zero.Customer.Support@allegion.com
www.zerointernational.com

Part No:	Part description:
43	Meeting stile

Notes:	Provided by:	
Customer name:	Job no:	Date:

Image may not be shown to scale

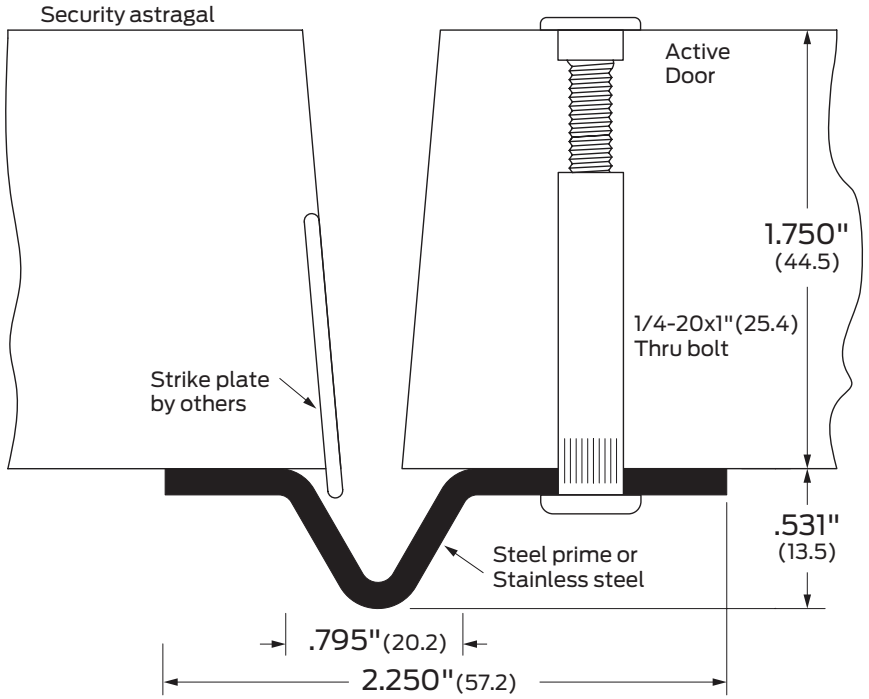

Certifications:

Fire rated-UL10c

Finishes:

SP Steel primed
STST Stainless steel

© 2018 Allegion · 012786, Rev. 1/19 · **www.allegion.com/us**

2720 Tobey Drive, Indianapolis, IN 46219
Tel 1-877-671-7011 ▪ Fax 800-851-0000
Zero.Customer.Support@allegion.com
www.zerointernational.com

Part No:	Part description:
547	Saddle threshold

Notes:

Provided by:

Customer name:

Job no:

Date:

Image may not be shown to scale

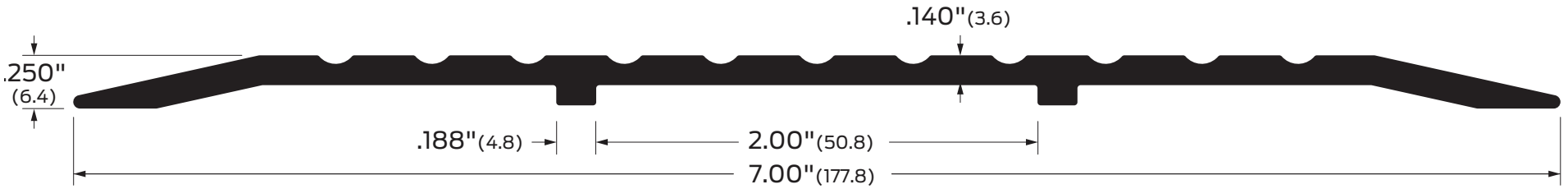

Notes:
Supplied without mounting holes.

Certifications:

- Fire rated-UL10c
- ADA Accessible

ANSI/BHMA:

547A, 547BK, 547D, 547G	J32100, J32130
547A-E, 547BK-E, 547D-E, 547G-E	J32200, J32230

BHMA CERTIFIED

Finishes:

A	Aluminum mill finish
BK	Aluminum black anodized
D	Aluminum dark bronze anodized
G	Aluminum gold anodized

Options:

E	Epoxy abrasive tread
EL	Photoluminescent and abrasive epoxy tread
V3	Full body strength fill
EV3	Epoxy and full body strength fill
ELV3	Photoluminescent and abrasive epoxy tread, full body strength fill

© 2018 Allegion · 012518, Rev. 11/18 · **www.allegion.com/us**

ALLEGION

SCHLAGE

Door position switches



674-OH

Overhead door, floor mount magnetic switch

Overview

Door position switches are used to detect the open or closed status of an opening and then send this status to a control panel. They come in a variety of shapes and sizes and are designed for monitoring door positions, roof hatches, gates etc.

Concealed SPDT magnetic switches

For wood doors and frames
0.3 Amps @ 30 VDC

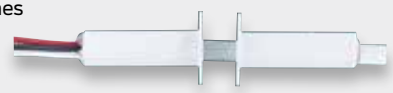

679-05

For hollow metal doors and frames
0.3 Amps @ 30 VDC



679-05 HM

For wood doors and metal frames
0.3 Amps @ 30 VDC



679-05 WD

Concealed/flush mount magnetic switches

For aluminum, wood and hollow metal doors 0.25 Amps @ 30 VDC
UL Listed



7764

Surface mount magnetic switches

For aluminum, wood and hollow metal doors 0.25 Amps @ 30 VDC
UL Listed



7766

Ordering information

- **674-OH** - Overhead door floor mount
- **679-05** - Wood door and frame
- **679-05HM** - Hollow metal door and frame
- **679-05WD** - Wood door and metal frame
- **7764** - Concealed/flush mount
- **7766** - Surface mount

Allegion, the Allegion logo, Schlage, and the Schlage logo are trademarks of Allegion plc, its subsidiaries and/or affiliates in the United States and other countries. All other trademarks are the property of their respective owners.

About Allegion

Allegion (NYSE: ALLE) is a global pioneer in safety and security, with leading brands like CISA®, Interflex®, LCN®, Schlage® and Von Duprin®. Focusing on security around the door and adjacent areas, Allegion produces a range of solutions for homes, businesses, schools and other institutions. Allegion is a $2 billion company, with products sold in almost 130 countries. For more, visit **www.allegion.com.**

aptiQ ■ LCN ■ SCHLAGE ■ STEELCRAFT ■ VON DUPRIN

ALLEGION™

© 2015 Allegion
005005, Rev. 08/15
www.allegion.com/us

ALLEGION

SCHLAGE

660 Series

Mini station control



Overview

The 660 Series mini station control is designed for concealed desk application, and it is used to release an electric or electronic locking mechanism from a remote location. The 660 Series mini station control is mounted in a mini aluminum box, 2" x 2" x 1". The 660 is available with a momentary action pushbutton or maintained action toggle switch. Both can be surface mounted. A typical application is under a desk to release an entrance door.

Features and benefits

- Surface mount application
- Choice of maintained or momentary action
- Compact size
- Recommended for concealed desk application

Specifications	
Switch contact rating	6 amp @ 120 VAC
Length	2"
Width	2"
Height	1"

Ordering information

- **660-T4** - SPDT maintained toggle
- **660-PB** - PB SP momentary pushbutton

Allegion, the Allegion logo, Schlage, and the Schlage logo are trademarks of Allegion plc, its subsidiaries and/or affiliates in the United States and other countries. All other trademarks are the property of their respective owners.

About Allegion

Allegion (NYSE: ALLE) is a global pioneer in safety and security, with leading brands like CISA®, Interflex®, LCN®, Schlage® and Von Duprin®. Focusing on security around the door and adjacent areas, Allegion produces a range of solutions for homes, businesses, schools and other institutions. Allegion is a $2 billion company, with products sold in almost 130 countries. For more, visit **www.allegion.com.**

aptiQ ■ LCN ■ SCHLAGE ■ STEELCRAFT ■ VON DUPRIN

ALLEGION™

© 2016 Allegion
003912, Rev. 04/16
www.allegion.com/us

ALLEGION

SCHLAGE

PS902

2 amp power supply



Photo as shown includes optional board(s). Please contact your local sales office or visit the support section on our website for configuration assistance.

Overview

The Schlage comprehensive line of power supplies and option boards was designed to address the changing needs of the access control market.

Installation is simplified by utilizing a flat mounting design and polarized locking connectors for option boards. This design eliminates the need for racks and side connectors. The flat mounting of the option boards also provides for easier access to the terminal blocks for connection of electrified devices (such as electrified strikes, electromagnetic locks, card readers, etc.).

Common to the line of PS900 Series power supplies is a constant output rating at both 12v and 24v settings, universal 120 VAC to 240 VAC input, and polarized option board connectors. New fire alarm interface board mounting allows outputs to be configured as switched (power cut) or unswitched (power continues) when signal is provided.

Features and benefits

- 2A @ 12/24 VDC constant output, field selectable with jumper
- Provides low-voltage, Class 2, filtered and regulated power
- Universal 120-240 VAC, fused primary input
- Single polarized option board connector
- AC input and DC output monitoring circuit with LED indicators
- Externally visible AC input indicator with isolated SPDT contacts
- High-voltage protective cover for AC circuitry (not shown)
- Battery back-up board auto-selects voltage
- Optional Fire Alarm plug-in board available
- UL 294, ULC-S318, RoHS, and FCC Part 15 certified

Configuration options

Available option board, fire alarm and battery backup connection locations:

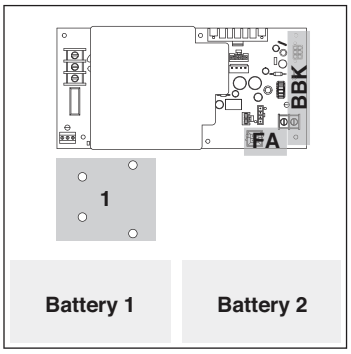

Exit device support

Von Duprin QEL	Up to 2[1]
Von Duprin EL	None
Falcon EL	None

1. Requires the use of one 900-2RS option board

PS902 power supply specifications

Specification	Description
Input voltage	120/240 VAC, 50/60 Hz, universal input
Output voltage	2A @ 12 or 24 VDC Field selectable with jumper Switching supply, 5% regulation, 240mVpp max ripple
Enclosure	Grey/baked enamel 14" x 12" x 4" (H x W x D) Eight ½" x ¾" knockouts NEMA Grade 1 Hinged cover with lock down screws
Operating temperature	32º - 120ºF (0º - 49ºC)
Certifications	ANSI/UL 294 ULC-S318 RoHS FCC Part 15 Class 2
Battery backup (install on main board)	900-BB: Battery backup board only 900-BBK: Battery backup kit (backup board plus battery pack)
Available option boards	900-FA: Plug-in fire alarm (install on main or option board) 900-2RS: 2 Relay option board capable of individual or sequential operation for single and pair door applications 900-4R: 4 Relay option board 900-4RL: 4 Relay option board with integrated logic and individual or sequential operation capability for controlling security interlocks, auto operators, and time delay function 900-8F: Fused, 8 zone option board 900-8P: PTC, 8 zone option board
AC primary fuse size	3.15A, 250v, 5 x 20mm
Battery fuse size	7.5A 32v ATO blade style
DC output protection	Overload protection - current limited foldback circuit
Indicators	LED indicators: - AC input (visible on outside of enclosure) - DC output Isolated SPDT contacts to monitor AC power status
Weight (power supply)	Approx. 9.0 lbs
Weight (each battery)	4.0 lbs
AC input termination	3 position terminal block with protective cover Wire capacity: 10 AWG max.
DC output termination	2 position terminal block Wire capacity: 12 AWG max.
Option board connectors	1
Fire alarm board connector	Yes
Keylock	Optional
Accessories	900-BAT: Backup battery pack

Allegion, the Allegion logo, Schlage, and the Schlage logo are trademarks of Allegion plc, its subsidiaries and/or affiliates in the United States and other countries. All other trademarks are the property of their respective owners.

About Allegion

Allegion (NYSE: ALLE) is a global pioneer in safety and security, with leading brands like CISA®, Interflex®, LCN®, Schlage® and Von Duprin®. Focusing on security around the door and adjacent areas, Allegion produces a range of solutions for homes, businesses, schools and other institutions. Allegion is a $2 billion company, with products sold in almost 130 countries. For more, visit **www.allegion.com.**

aptiQ ■ LCN ■ SCHLAGE ■ STEELCRAFT ■ VON DUPRIN

ALLEGION™

© 2016 Allegion
004195, Rev. 08/16
www.allegion.com/us

SECTION 08 81 00
GLASS GLAZING

PART 1 - GENERAL

1.1 SUMMARY

A. Section Includes:
   1. Annealed glass.
   2. Strengthened glass.
   3. Coated glass.
   4. Laminated glass.
   5. Insulating glass units.
   6. Supplementary components and accessories normally furnished or necessary for a complete installation, whether or not such items are indicated on the Drawings or included in the Specifications.

1.2 SECTION REQUIREMENTS

A. Delegated Design Requirements:
   1. Engineer, fabricate, assemble, and install glazing that conforms to the sizes and thicknesses indicated and other Contract Document requirements; meets specified performance requirements; and results in structurally sound and weathertight assemblies that accommodate, resist, distribute, or transfer in-service loads without incipient or catastrophic failure.
   2. Maintain visual design concept indicated, including sizes and alignments. Deviation from visual design concept is non-conforming work and prohibited without prior written acceptance by the Architect.

B. Qualifications:
   1. Manufacturer: Company or individuals must have at least 10 years' experience manufacturing glazing installed on at least 200 previous projects similar to this project in size, material, design, and complexity.
   2. Fabricator: Must have at least 10 years' experience fabricating custom glazing for at least 100 previous projects similar to this project in similar to this project in size, material, design, and complexity.
   3. Installer: Company or individuals must have at least 5 years' experience installing glazing for at least 30 previous projects similar to this project in size, material, design, and complexity.
   4. Supervisors: Individuals must have at least 7 years' experience installing glazing for at least 30 previous projects similar to this project in size, material, design, and complexity, including at least 2 years' supervisory experience directing and leading glazing installers.
   5. Engineer: Must be a licensed professional structural engineer registered to practice in California having at least 10 years' experience performing the kind of engineering services indicated for at least 20 previous projects similar to this project in size, material, design, and complexity.

C. Submittals: Submit product data, glazing schedule, samples, and written descriptions of specified qualifications, and delegated design submittals.

D. Mockups: If an *ex-situ* exterior wall integrated mockup is required for this project, then integrate glazing into the mockup as part of the work of this specification section.

E. Warranty:
   1. Manufacturer Warranty: Furnish to the Owner a written manufacturer warranty for products, components, and accessories against all patent and latent defects, and incipient and catastrophic failure for 10 years.
   2. Installer Guarantee: Furnish to the Owner a written guarantee for the work of this specification section against all defects in materials and workmanship for 5 years from date of acceptance. Guarantees must be properly prepared and signed on the guarantee form in Division 01.

PART 2 - PRODUCTS

2.1 PRIMARY GLASS MANUFACTURERS

A. Manufacturers: Provide products manufactured by one of the following, or equal.
   1. Guardian Industries Corp.
   2. Pilkington North America, Inc.
   3. PPG Industries.
   4. Saint-Gobain Corp.

2.2 MANUFACTURED GLASS

A. Clear Annealed Vision Glass:
   1. Description: ASTM C 1036, Type I (transparent flat glass), Class 1 (clear), Quality Q3 (select glazing applications).

B. Ultra-Clear (Low Iron) Annealed Vision Glass:
   1. Description: ASTM C 1036, Type I (transparent flat glass), Class 1 (clear), Quality Q3 (select glazing applications).
   2. Products: Provide one of the following, or equal.
      a. “Starphire” manufactured by PPG Industries.
      b. “UltraWhite” manufactured by Guardian Industries Corp.
      c. “OptiWhite” manufactured by Pilkington North America, Inc.
      d. “DIAMANT” manufactured by Saint-Gobain Glass.
   3. Performance Requirements:
      a. Visible Light Transmittance (VLT): At least 90 percent at 6mm thickness.

C. Tinted (Heat Absorbing) Annealed Vision Glass:
   1. Description: ASTM C 1036, Type I (transparent flat glass), Class 2 (tinted), Quality Q3 (select glazing applications).
   2. Color: Match Guardian color, “Crystal Gray”.

2.3 SECONDARY GLASS FABRICATORS

A. Fabricators: Provide products fabricated by one of the following, or equal.
   1. Oldcastle BuildingEnvelope Corp.
   2. PPG Industries.
   3. Viracon, Inc.

2.4 FABRICATED GLASS

A. Heat-Strengthened Glass:
   1. Description: ASTM C 1048, Kind HS (heat strengthened), Condition A (uncoated surfaces), Type I (transparent flat glass), Class 1 (clear), Quality Q3 (select glazing applications).
   2. Minimum Surface Compression Strength (up to 1/4-inch thick): 4,000 to 7,000 pounds per square inch.
   3. Minimum Surface Compression Strength (5/16 to 3/8-inch thick): 5,000 to 8,000 pounds per square inch.
   4. Fabrication:
      a. Except where not practicable due to glass size, fabricate tempered glass by the horizontal (roller hearth) process with roll wave distortion parallel to the bottom glass edge when installed, unless otherwise indicated.
      b. Do not exceed 1/32-inch bow and warp tolerances.

B. Fully-Tempered (Toughened) Glass:
   1. Description: ASTM C 1048, Kind FT (fully tempered), Condition A (uncoated surfaces), Type I (transparent flat glass), Class 1 (clear), Quality Q3 (select glazing applications).
   2. Minimum Surface Compression Strength: At least 10,000 pounds per square inch.
   3. Fabrication:
      a. Fabricate tempered glass by the horizontal (roller hearth) process with roll wave distortion parallel to the bottom glass edge when installed, unless otherwise indicated.
      b. Glazing materials must be free from bubbles, smoke vanes, air holes, scratches and other defects, having ground and arrised edges; provide polished edges where exposed.
   4. Source Quality Control:
      a. Individual tempered glass lites installed overhead, and floor-to-ceiling tempered glass lites installed adjacent to walking surfaces must be fully heat soak tested by the manufacturer or fabricator before delivery to the project site.
      b. Other tempered glass lites may have statistical heat soak testing performed to demonstrate nickel sulfide breakage does not exceed 0.1 percent.

C. Vacuum Deposition-Coated (Sputter-Coated) Vision Glass:
   1. Description: ASTM C 1376, Kind CV (coated vision – if glass can be approached within 10 feet or less) or CO (coated overhead – if distance is greater than 10 feet) as applicable; and ASTM C 1048, Kind HS (heat strengthened) or FT (fully tempered) as indicated, Condition C (other coated glass), Type I (transparent flat glass), Class 1 (clear), Quality Q3 (select glazing applications).
   2. Coating: Either spectrally selective or hybrid low-emissivity coating (low-E coating) scheduled at the end of this Section.

D. Laminated Glass:
   1. Description: ASTM C 1172, Kind LA (laminated annealed), Kind LHS (laminated heat strengthened), or Kind LT (laminated fully tempered) as scheduled.
   2. Glass Panes: Indicated on the Drawings, or equal.
   3. PVB Interlayer:
      a. Product: “Saflex” manufactured by Eastman Chemical Co. or “Butacite” manufactured by E.I. du Pont de Nemours & Co., Inc. (DuPont), or equal.
      b. Opacity: Clear, translucent white (either acid etch or simulated sandblast), or opaque white interlayer indicated on the Drawings or selected by the Architect.
   4. Ionoplast Interlayer:

a. Product: “SentryGlas Plus” manufactured by E.I. du Pont de Nemours & Co., Inc. (DuPont), or equal.
b. Color: Clear or translucent interlayer indicated on the Drawings or selected by the Architect.

5. Fabrication: Glass must conform to the requirements of ASTM C 1172, “*Standard Specification for Laminated Architectural Flat Glass”.* Fabricate laminated glass free from foreign substances, and from air or glass pockets.

E. Insulating Glass Units:
1. Glass Panes: Indicated on the Drawings, or equal.
2. Interspace: Hermetically sealed, air-filled interspace.
a. Spacer Material: Black anodized aluminum.
b. Spacer Corner Construction: Provide spacers and splices with no visible seams; and with soldered/welded corners.
c. Desiccant: Either molecular sieve or silica gel, or a blend of both, provided on all four sides.
3. Seals: Black polyisobutylene primary sealant; black silicone secondary sealant.
4. Edge Deletion: To promote full adhesion of primary sealant, low “E” coatings at the glass perimeter must be removed before fabrication, as required, recommended, authorized, sanctioned, or accepted by the manufacturer.
5. Fabrication: IGU assemblies conforming to IGMA publication TB-3000, “*North American Glazing Guidelines for Sealed Insulating Glass Units for Commercial and Residential Use*”.

2.5 ACCESSORIES

A. Spacer Shims: Continuous shims fabricated from load-bearing, non-leaching, high-impact polystyrene.

B. Setting Blocks, Spacers and End Blocks: Provide the following, unless another type, hardness, class, or surface is supplied, required, recommended, authorized, sanctioned, or accepted by the glass installer.
1. Setting Blocks: Elastomeric silicone rubber conforming to ASTM C 1115, CH9.
2. Spacers for Structural Silicone Glazing: Elastomeric silicone rubber conforming to ASTM C 1115, CH6S1.

C. Glazing Gaskets: Fabricate compression gaskets in lengths recommended by gasket manufacturer to fit openings exactly, with allowance for stretch during installation.
1. Firm, Dense Gaskets: Elastomeric EPDM rubber conforming to ASTM C 1115, CH7S2 unless another type, hardness, class or surface is supplied, required, recommended, approved, or accepted by the glass installer.
2. Soft, Closed Cell Gaskets: ASTM C 509. Provide EPDM rubber with pre-molded corners.

D. Backer Rod for Butt Joints: Square bi-cellular backer rod; color matching silicone sealant.

E. Cleaners, Primers, Sealers: Supplied, required, recommended, or accepted by the manufacturer or fabricator.

F. Other Accessories: Provide other accessories and secondary items normally furnished or necessary for a complete installation; or supplied, required, recommended, or accepted by the manufacturer for actual in-service conditions applicable to the project.

PART 3 - EXECUTION

3.1 INSTALLATION REQUIREMENTS

A. General:
   1. Ensure proper supervision practices are followed at the project site before the installer begins work and at all times during installation.
   2. Verify in-place supporting and adjacent construction conforms to the manufacturer's requirements or recommendations, and satisfies all other conditions that might affect the quality of installation or the durability, appearance, or performance of installed and adjacent items.
   3. Install glazing using materials and methods required, recommended, or accepted by the manufacturer, along with manufacturer-recommended accessories and techniques.
   4. Set glazing true to line; plumb, level, and square without warp or rack; with flush, well-fitted joints; and in alignment with adjacent construction.
   5. Securely attach glazing in place to supporting construction.

B. Installation Tolerances: Install glazing within the following tolerance variations.
   1. Maximum Out of Plumb: Not more than L/960 of span, or 1/8-inch in 10 feet.
   2. Maximum Out of Level: Not more than L/960 of span, or 1/8-inch in 10 feet,
   3. Maximum Out of Plane: Fastening surfaces of adjacent framing members may not vary by more than 1/8-inch.
   4. Maximum Stud Spacing Variance: Not more than 1/8-inch.

C. Correction and Repair:
   1. Correct deficiencies that do not conform to the Contract Documents.
   2. Repair non-conforming, damaged, and defective work.
   3. Replace soiled items that cannot be cleaned to the same condition as new.
   4. Installed glazing must be warrantable. Do not install, correct, or replace glazing in a manner that is un-warrantable by the manufacturer or that results in any other warranty or guarantee becoming void.

D. Protection:
   1. Protect installed glazing in place from soiling, deterioration, and damage until Substantial Completion.
   2. Remove protection when it's no longer needed and before Substantial Completion.

END OF SECTION

©AWCWEST 18E22 All rights reserved.

SECTION 08 91 13
FIXED LOUVERS

PART 1 - GENERAL

1.01 SUMMARY

A. Section Includes:
   1. Fixed wall louvers.
   2. Supplementary components and accessories normally furnished or necessary for a complete installation, whether or not such items are indicated on the Drawings or included in the Specifications.

1.02 SECTION REQUIREMENTS

A. Qualifications:
   1. Manufacturer: Company or individuals must have at least 10 years' experience manufacturing louvers installed on at least 200 previous projects similar to this project in size, material, design, and complexity.
   2. Installer: Company or individuals must have at least 5 years' experience installing louvers for at least 30 previous projects similar to this project in size, material, design, and complexity.
   3. Supervisors: Individuals must have at least 7 years' experience installing louvers for at least 30 previous projects similar to this project in size, material, design, and complexity, including at least 2 years' supervisory experience directing and leading louver installers.

B. Submittals: Submit product data, shop drawings, samples, and written descriptions of specified qualifications.

C. Mockups: If an *ex-situ* exterior wall integrated mockup is required for this project, then integrate louvers into the mockup as part of the work of this specification section.

D. Manufacturer Warranty: Furnish to the Owner a written manufacturer warranty for finishes against color fading, chalking, cracking, checking, peeling, and adhesive failure for 20 years.

PART 2 - PRODUCTS

2.01 MANUFACTURERS

A. Manufacturer: Provide products manufactured by one of the following, or equal.
   1. The Airolite Co., LLC.
   2. Construction Specialties, Inc.
   3. Greenheck Fan Corp.
   4. Ruskin Co.

2.02 STORM-RESISTANT LOUVERS

A. Description: Extruded aluminum mullion louver assembly licensed to bear AMCA International's Certified Rating Seal for performance.

B. Product: "Model RS-4300" manufactured by Construction Specialties, Inc., or equal.

C. Requisite Properties:

1. Sizes: Indicated on the Drawings.
2. Nominal Depth: 4 inches.
3. Blade Type: Chevron blade.
4. Frames and Mullions: At least 0.080-inch thick aluminum.
5. Louver Blades: At least 0.080-inch thick aluminum.
6. Sill Flashing: 4-inch high by full depth by 0.50-inch thick aluminum, with continuously welded and watertight side panels (end dams).
7. Exposed Finishes: Match storefront framing.
8. Concealed Steel Finishes: Prepare surfaces and apply shop primer specified in Section 05 05 13.
9. Concealed Aluminum Finishes: Prepare surfaces and coat aluminum surfaces in contact with masonry, concrete, or steel with bituminous paint specified Section 05 50 00.

D. Performance Requirements (based on 4-foot square louver and 15-minute test duration):

1. Net Opening: At least 7.51 square feet.
2. Percentage Free Area: At least 47 percent.
3. Design Velocity: At least 900 feet per minute.
4. Intake Pressure Drop at 900 feet per minute Free Area Velocity: Not more than 0.226-inch water gage pressure loss.
5. Exhaust Pressure Drop at 900 feet per minute Free Area Velocity: 0.257-inch water gage pressure loss.
6. Wind Driven Rain: Must have at least a Class A (99-percent) effectiveness rating, when tested in compliance with AMCA publication ANSI/AMCA Standard 500-L, "*Laboratory Methods of Testing Louvers for Rating*" based on a one square meter core area (39-inch by 39-inch) louver test unit with a mill finish and no screen, tested at a rainfall rate of 3 inches per hour and a wind velocity of 29.1 miles per hour.

2.03 MATERIALS

A. Aluminum:

1. Standard Aluminum Structural Profiles: ASTM B 308, Alloy 6061-T6.
2. Extruded Aluminum Bars and Shapes: ASTM B 221, Alloy6063-T5 or T6 for primary components; Alloy 6063-T5 or T6, 6005-T5, 6105-T5 or 6061-T6 for structural components.
3. Aluminum Sheet and Plate: ASTM B 209, Alloy 5005-H32 or Alloy 3003-H14.
4. Extruded Aluminum Tubes: ASTM B 221 or ASTM B 483.
5. Structural Aluminum Pipe and Round Tube: ASTM B 429.

2.04 ACCESSORIES

A. Steel Reinforcement: When required by engineering calculations, provide steel bent plate or shapes conforming to ASTM A 36 and shop primed in compliance with Section 05 05 13.

B. Brackets: Provide high-strength aluminum or austenitic stainless steel brackets and reinforcements.

C. Sill Flashing: Fabricate from at least 0.0299-inch BMT (MSG 22) hot-dip galvanized and galvannealed steel sheet, with welded end dams and finished to match frames, mullions, and blades.

D. Bird Screen: 1/2-inch by 1/2-inch mill finish aluminum woven wire mesh fabric made from at least 0.0508-inch diameter (AWG 16) aluminum wire.

E. Fastenings: Provide backings, inserts, loose connection hardware, fasteners, anchors, attachments, connectors, and other items supplied, required, recommended, or accepted by the manufacturer for actual in-service conditions applicable to the project.
   1. Where fasteners are subject to loosening or turning out from thermal and structural movements, wind loads, or vibration, use self-locking devices.
   2. Reinforce framing members as required to receive fastener threads.
   3. Exposed fasteners are prohibited on faces exposed to view. Provide concealed fasteners and expansion provisions.

F. Other Accessories: Provide accessories and secondary items normally furnished or necessary for a complete installation; or supplied, required, recommended, or accepted by the manufacturer for actual in-service conditions applicable to the project.

PART 3 - EXECUTION

3.01 INSTALLATION REQUIREMENTS

A. General:
   1. Ensure proper supervision practices are followed at the project site before the installer begins work and at all times during installation.
   2. Verify in-place supporting and adjacent construction conforms to the manufacturer's requirements or recommendations, and satisfies all other conditions that might affect the quality of installation or the durability, appearance, or performance of installed louvers and adjacent items.
   3. Install louvers using using materials and methods required, recommended, or accepted by the manufacturer, along with manufacturer-recommended accessories and techniques.
   4. Set items true to line, to required levels and lines, and plumb, level, and square, without warp or rack, with flush well-fitted joints, and in alignment with adjacent construction.
   5. Perform drilling as required or necessary for an accurate fit and complete installation.
   6. Securely attach louvers in place to supporting construction.
   7. Installed louvers must be warrantable. Do not install, correct, or replace louvers in a manner that results in any warranty or guarantee becoming void.

B. Special Techniques:
   1. Use concealed fasteners and anchorages. Provide washer head fasteners with bonded sealing washers where required to protect metal surfaces and to make weathertight connections.
   2. Form closely-fitted joints with exposed connections accurately located and secured.
   3. Provide uniform-width perimeter reveals and opening sealants and joint fillers as indicated.
   4. Install concealed gaskets, flashings, and joint fillers as the louver installation progresses.

C. Installation Tolerances: Install louvers to an allowable tolerance variation of not more than 1/4-inch from true position and not more than 1/8-inch and from plumb, level, and alignment.

D. Correction and Repair:
   1. Correct deficiencies that do not conform to the Contract Documents.
   2. Repair non-conforming, damaged and defective work.
   3. Repair damaged finishes. Restore finishes so that no evidence remains of corrective work. Return to the factory those items that either cannot be refinished in the field, or that contain

components that cannot be refinished in the field. Make required alterations and either refinish the entire item or provide a new item.

E. Protection:
   1. Protect installed louvers in place from soiling, deterioration, and damage until Substantial Completion.
   2. Remove protection when it's no longer needed and before Substantial Completion.

END OF SECTION

©AWCWEST 18E22 All rights reserved.
RSTLNE, TAGDSC, ELMTB, CLSB2070

DIVISION 09

FINISHES

SECTION 09 05 16
PREPARATION OF CONCRETE SUBSTRATES FOR FINISH FLOORING

PART 1 - GENERAL

1.01 SUMMARY

A. Section Includes:
1. Concrete substrate testing equipment.
2. Corrective (remedial) MVECS.
3. Surface preparation.
4. Site tests and inspections.
5. Supplementary components, accessories, and detail work normally furnished or otherwise necessary for complete testing and preparation, whether or not such items are indicated on the Drawings or included in the Specifications.

B. Related Requirements:
1. Section 03 35 10 for preventative (day-of-pour) MVECS; for definitions of the term “recently-cured”, “hardened”, “newly-aged”, and “existing” concrete; and for wet concrete RH meter accessories.
2. Section 03 54 16 for definition of the term “underlayment”.

1.02 RELATED DOCUMENTS

A. This specification section
1. supplements the requirements of specification sections that identify penetrants, overlays, and coverings required for the project; and
2. is used with other specification sections to produce correct and complete substrates for all actual in-service flooring conditions applicable to the project; and sound substrates for the proper and warrantable installation of all specified or selected penetrants, overlays, and coverings, including underlayment specified in Section 03 54 16.

1.03 PRICE AND PAYMENT PROCEDURES

A. Unit Prices:
1. Administrative Requirements:

a. Unless otherwise indicated, specified MVECS is excluded from the Contract and used only as a topical remediation where necessary to conform to the penetrant, overlay, and covering manufacturers’ MVER, pH, and RH requirements.

b. Supply unit prices in terms of dollars per square foot for complete MVECS surface preparation and installation.

c. Specified MVECS becomes part of the Contract upon acceptance in writing by the Owner via properly-executed Change Order.
2. Measurement Procedures: Contract adjustments are made based on the net installed verifiable quantities of conforming work compared to quantities indicated on the Drawings.
3. Payment Procedures:

a. The Owner provides payment based on actual quantities and measurements that are both placed in the work and verified by the Architect.

b. The Owner is not required to provide additional compensation for extraneous, non-conforming, or rejected work.

B. Alternates: With input from the preventative (day-of-pour) MVECS manufacturer, preventative MVECS specified in Section 03 35 10 may be considered for certain concrete curing applications in lieu of curing compounds; and possibly in lieu of corrective MVECS products specified in this specification.

1.04 REFERENCES

A. Abbreviations and Acronyms:
1. CC: Anhydrous Calcium Chloride.
2. ICRI: International Concrete Repair Institute.
3. MVECS: Moisture Vapor Emission Control System.
4. MVER: Moisture Vapor Emission Rate.
5. pH: Potential of Hydrogen.
6. RH: Relative Humidity.

B. Definitions:
1. Moisture Vapor Emission Rate (MVER): Means the amount of moisture emitted from a substrate, expressed as the weight of condensed gas (liquid) in theoretical pounds emitted over 1,000 square feet of floor area during a 24-hour period. MVER is commonly referred to as “pounds” (i.e., “3 pounds” or “3 lb”). Rates range from 0 to 30 pounds per 1,000 square feet per 24 hours.
2. Substrate: Means a recently-cured, hardened, newly-aged, or existing concrete substrate, including cast-in-place, sitecast, and precast concrete floor and deck assemblies, cast underlayment, toppings, repair materials, and similar items.

    a. Floor: Means a slab-on-grade floor assembly.

    b. Deck: Means a suspended floor or roof slab assembly.
3. Penetrant: Means any direct-applied material, product, component, accessory, or other item that can pass into or through substrate surfaces, or enter and diffuse through substrate surface cracks, pores, and other surface defects. Penetrants include water, hardeners, curing compounds, stains, penetrating repellents and sealers, non-sacrificial graffiti-resistant materials, and dry penetrants.
4. Overlay: Means any direct-applied film-forming or high-build material that covers a substrate surface, including cast decks, underlayment, and toppings; dampproofing, waterproofing, and roofing; liquid flashings and sealants; fluid-applied and flooring treatment; terrazzo flooring; and paints, coatings, and film-forming sealers; and sacrificial graffiti-resistant materials.
5. Covering: Means any direct-applied material, product, component, accessory, or other item that is adhered or bonded to a substrate surface, including tile and adhered veneer assemblies; specialty, masonry, wood, resilient and precast terrazzo flooring; carpeting; and unit paving.
6. Cladding: Means any material, product, component, accessory, or other item supported by a framework, which is attached to a sporting construction, including anchored veneer, wall and soffit panels, and exterior plaster assemblies; suspended ceiling assemblies; and free-standing elevated accessible floor and roof paver assemblies.

7. Overburden: Means all materials, components, accessories, and other items installed or placed over a cured substrate, including overlays, coverings, cladding, and vegetated plaza deck and roof assemblies.

1.05 ADMINISTRATIVE REQUIREMENTS

A. Preinstallation Meeting:
   1. MVECS manufacturer's representative and MVECS installer must attend the preinstallation meeting specified in specification section 03 35 10.
   2. Schedule a separate additional preinstallation meeting between the Contractor, the Architect, penetrant, overlay and covering manufacturers' representatives and installers, the MVECS manufacturer's representative and installer, and the entities and individuals responsible for conducting concrete substrate testing.
   3. Hold the meeting after submittal approval and at least 10 business days before beginning installation.
   4. During the meeting, review

      a. substrate design and installation, including concrete mix design, water-cement ratio, slab thickness at each test location, below grade VDRs and concrete placement and pour dates;

      b. curing, sealing, or bond breaking compounds used on substrates, along with requirements and techniques used for complete removal of compounds prior to testing and floor covering installation;

      c. trenching, including mix design, water-cement ratio, thickness, and pour dates of concrete or slurry backfill;

      d. bonding agents selected for overlay installation or application;

      e. primers and adhesives selected for covering installation;

      f. qualifications of the testing agency and testing agency personnel that are scheduled to complete testing, and that interpret test results;

      g. calibration and verification of test equipment prior to beginning each round of testing;

      h. HVAC system operation and requirements during testing, including temperature and RH limits;

      i. preparation of testing sites, including procedures to assure slab surfaces are free from any material or substance that may hinder the free release of moisture from the slab;

      j. testing procedures and sequence for each test, including sequence, frequency, and location of test sites;

      k. requirements for testing and inspection reports;

      l. the construction schedule;

      m. temporary procedures required to protect concrete surfaces from re-wetting after initial testing; and

      n. redistribution of moisture within the substrate after floor coverings are applied;

5. Identify and discuss adverse or unfavorable conditions detrimental to testing and floor preparation.
6. Finalize construction schedule.
7. Record significant discussions and distribute meeting minutes. Do not begin installation until disagreements are successfully resolved to the satisfaction of all parties.

B. Quality Standards:
1. Quality Guideline: Selected concrete surface profiling, preparation, cleaning, and repair must conform to the requirements of International Concrete Repair Institute (ICRI) Guideline No. 310.2R, "*Selecting and Specifying Concrete Surface Preparation for Sealers, Coatings, Polymer Overlays, and Concrete Repair*".
2. Installation Standard: Concrete surface preparation must conform to the requirements of Journal of Protective Coatings and Linings (JPCL) publication, "*Surface Preparation of Concrete Substrates*".

C. Qualifications:
1. Substrate Testing: Individuals performing substrate testing must be certified as ICRI Concrete Slab Moisture Testing Technicians, Grade 1 and current in their certification.
2. Substrate Repair: Individuals performing substrate repair must be certified as ICRI Concrete Surface Repair Technicians, Grade 1 and current in their certification.

D. Sequencing: Begin substrate testing only after
1. the building is enclosed with a permanent enclosure, including permanently-installed doors, windows, storefronts, curtain walls and similar opening protectives;
2. "wet work" such as concrete work, plastering, tile installation, and gypsum board finishing are complete and cured and dried to a condition of equilibrium;
3. testing areas are properly prepared for testing; and
4. the HVAC system is activated, operating, and maintaining temperatures and RH at anticipated occupancy levels for at least 48 hours prior to and during testing.

    a. If HVAC activation and operation prior to testing cannot be provided within the proposed construction schedule, then close a number of rooms or spaces where conditions can either be brought to anticipated normal conditions or into conformance with the minimum environmental parameters of the specified test standards using commercial equipment and building climate control services.

    b. Provide a recording hygrometer to monitor and record ambient temperature and RH levels for comparison to design occupancy conditions.

E. Scheduling:
1. Allow sufficient time in the construction schedule to permit concrete to cure and dry, without being re-wetted, for at least 90 days before beginning testing. Substrates re-wetted after initial curing must be permitted to cure and dry for at least 180 days before beginning testing.

    a. If minimum concrete curing and drying time cannot be provided in the construction schedule, assume the specified MVECS must be incorporated into the project as a topical remediation for concrete substrates, and reflect this assumption in the project cost until otherwise directed by the Owner**.**

    b. Forced drying substrates is prohibited.
2. Allow sufficient time in the construction schedule to permit RH test sites to equalize for at least 72 hours prior to reading equilibrium RH levels.
3. Testing must be complete and reports submitted at least one week, but not more than 3 weeks, before beginning penetrant, overlay, or covering installation or application.

1.06 SUBMITTALS

A. Action Submittals: Before beginning the work of this specification section, including bulk purchase and delivery of products, submit to the Architect the following for responsive action (formal review and approval).
   1. Product Data:

      a. Submit a comprehensive and complete list of proposed and other items specified, required, or otherwise necessary to complete the work of this specification section, including all accessories and similar secondary items normally furnished, required, or otherwise necessary for complete repair, surface preparation, testing and remediation.

      b. For each item listed, submit manufacturer's product data, specifications, typical installation details for all actual in-service conditions applicable to this project, and any other information necessary to demonstrate conformance with the Contract Documents, excluding Material Safety Data Sheets (MSDSs), which are returned to the Contractor without review.

B. Informational Submittals: Submit to the Architect the following for information (for informal review: responsive action by the Architect, including formal review and approval, is not expected or required, except to record non-conformance with specified requirements).
   1. Installation Instructions: Before beginning the work of this specification section, submit the following.

      a. Submit manufacturer-prepared published instructions for the proper installation of each furnished manufactured item and accessory, including packaging, delivery, storage, handling, surface preparation, installation, adjusting, cleaning, and protection instructions and requirements.

      b. If manufacturer-prepared published installation instructions are either unavailable or do not specifically apply to actual project conditions, then consult with the manufacturer's representative and obtain manufacturer-prepared, project-specific supplemental instructions printed on the manufacturer's company letterhead. Promptly distribute copies to the Architect for examination before beginning the work of this specification section; the Architect may have comments that lead to contract modifications, or to minor changes in the work.
   2. Test Reports: Submit facility floor plan diagrams showing area calculations and locations of each test along with measured test results for each test location.

PART 2 - PRODUCTS

2.01 MANUFACTURERS

A. Manufacturers: Provide products manufactured by one of the following, or equal.
   1. American Moisture Test, Inc.
   2. Vaisala
   3. Wagner Electronics.

2.02 CONCRETE SUBSTRATE TESTING EQUIPMENT

A. Description: Commercially-produced and -packaged test kits and equipment delivered to testing sites in factory-sealed wrappings.

B. MVER Testing Kits (CC Moisture Test Kits):
   1. Description: ASTM F 1869-compliant anhydrous calcium chloride moisture vapor testing kits consisting of a sealed dish of anhydrous calcium chloride, a metering dome with gasket, and instructions.
   2. Product: “AMT Calcium Chloride Moisture Test Kit” manufactured by American Moisture Test, Inc., or equal.
   3. Components:
      a. Non-pre-weighed, non-recycled, 94-percent pure anhydrous calcium chloride sealed in air-tight dishes.
      b. Virgin resin non-recycled plastic dome having a maximum U.S. perm rating of 0.10-perm or less.
      c. Butyl adhesive sealant system.
      d. Dish container size of 69mm plus or minus one millimeter; calcium chloride weight of 16 grams plus or minus one gram.

C. pH Testing Kits:
   1. Description: ASTM F 710-compliant digital alkalinity-pH meter.
   2. Product: “AMT Concrete Digital Alkalinity-pH Meter” manufactured by American Moisture Test, Inc., or equal.
   3. Components:
      a. Meter must return wide range (1-14) pH readings.
      b. Provide clean distilled or deionized water.

D. RH Testing Equipment:
   1. Description: ASTM F 2170-compliant temperature and RH meter, cable, RH probes, and concrete sleeves.
   2. Product: “AMT RH System” manufactured by American Moisture Test, Inc., or equal.

2.03 CORRECTIVE (REMEDIAL) MVECS

A. Description: Corrective MVER remediation system consisting of concrete mechanical surface profiling, sealer, and cementitious covering.

B. Application: MVER remediation system are applied when test results indicate slab MVER, pH, or RH exceed selected coating or covering manufacturer’s required, recommended, or accepted limits.

C. Concrete Surface Profiling: ICRI concrete surface profile CSP 2 to CSP 3 (grind to light blast between 4 and 10 mils), unless otherwise explicitly required, recommended, accepted in writing by the sealer manufacturer.

D. Sealer:
   1. Description: Moisture seal applied to substrates as a topical remediation.
   2. Products: “MES 100” manufactured by Floor Seal Technology, Inc., or equal.
   3. Requisite Properties:
      a. Composition: Products may not contain latex, organic additives or chemistries that have a potential to either re-emulsify or support micro-organism growth.

b. Growth Resistance: Product must not support the growth of mold, mildew or biological growth.

c. Safety: Non-corrosive, non-toxic, and non-hazardous to installers.

d. Water Pollution: Product must be a non-marine pollutant, and safe for natural water sources.

e. Maximum VOC Material Content: Less than 100 grams per liter.

4. Performance Requirements:

a. Water Vapor Transmission: Products must bring emission rates of up to 20 pounds to within a range conforming to the flooring manufactures' requirements, when measured in conformance with ASTM F 1869.

b. Alkali Resistance: Tolerant to 14pH alkali exposure, when tested in conformance with ASTM D 1308 and ASTM F 710.

c. Minimum Adhesion Strength: Between 370 and 500 psi, when tested in conformance with ASTM D 4541.

d. Adhesive Compatibility: Complete compatibility with all covering primers, adhesive, and materials.

e. Minimum RH Tolerance: Tolerant to at least 95 percent RH exposure, when determined in conformance with ASTM F 2170.

E. Covering:

1. Description: Cementitious topping applied directly over sealer to provide smooth substrate for finish flooring.
2. Products: Hydraulic cement underlayment specified in Section 03 35 16.
3. Minimum Thickness: Install underlayment to thickness required by either the sealer manufacturer or the finish flooring manufacturer (whichever is thicker), but not less than 1/8-inch.

2.04 ACCESSORIES

A. Trowelable Leveling and Patching Compounds: Specified in Section 03 54 16 unless other products are supplied, required, recommended, or accepted by the MVECS manufacturer for the applications indicated.

B. Other Accessories: Provide accessories and other similar secondary items supplied, required, recommended, or accepted by the MVECS manufacturer.

2.05 SURFACE PREPARATION

A. Penetrants:

1. Remove all dirt, dust, debris, and other foreign matter from concrete surfaces

B. Marker Removal:

1. Remove all slab markings by sanding or bead blasting surface clean.
2. Completely remove all marker markings (i.e. Sharpie markers), marker paint, spray paint, and other markings.

C. Floor Coatings and Fluid-Applied Flooring:

1. Provide one or more of the following ICRI concrete surface profiles, as applicable, unless otherwise explicitly required, recommended, or accepted in writing by the flooring manufacturer.

    a. Sealers: CSP 1 to CSP 2. (grind to between 0 and 3 mils)

    b. Thin-Film Coatings: CSP 2 to CSP 3. (grind to light blast between 4 and 10 mils)

    c. High-Build Coatings and Resurfacing Applications: CSP 3 to CSP 5. (light to medium shotblast between 10 and 40 mils)

    d. Self-Leveling Overlays: CSP 4 to CSP 6. (medium to heavy shotblast between 50 mils and 1/8-inch)

    e. Polymer Overlays: CSP 5 to CSP 9. (medium shotblast to coarse planing between 1/8- and 1/4- inch)

    f. Concrete Overlays, Toppings, and Repairs: CSP 5 to CSP 10. (medium shotblast to coarse planing greater than 1/4- inch)

2. To reduce the risk of introducing microcracking into the substrate, all concrete surface profiling must be achieved through abrasive blasting, grinding, or shot blasting; or through the use of surface retarders specified in Section 03 35 10.

    a. Handheld concrete breakers, rotomilling, needle scaling, scabbling, and scarifying are prohibited, unless explicitly required or recommended in writing by the covering manufacturer (scarifying grooves/lines may become visible through a newly laid coverings).

    b. Ultra-high- and high-pressure water jetting, and low-pressure water jetting surface preparation methods are also prohibited.

    c. Chemical cleaning and acid etching are also prohibited. (residual chemicals not removed may adversely affect the flooring performance and adhesion – ASTM D 4262 covers procedures for determining the acidity or alkalinity of concrete surfaces prepared by chemical cleaning or etching prior to coating)

3. Repair damaged sub-floor. Produce a uniform and smooth substrate. Fill cracks, holes, depressions, and similar substrate defects with trowelable leveling and patching compound; remove bumps and ridges.
4. Sweep and vacuum-clean substrates just prior to beginning floor covering installation.
5. Do not install flooring until it is acclimated to the same temperatures as the spaces into which it is installed. Move floor coverings and installation materials into spaces at least 48 before installation.

D. Floor Coverings: Prepare substrates in conformance with the requirements of ASTM F 710 and as required, recommended, or accepted by the manufacturer without limitation; and in a manner that does not result in any warranty or guarantee becoming void.

1. Verify substrates are dry and free of curing compounds, sealers, and hardeners.
2. Remove substrate coatings and other substances that are incompatible with adhesives or that contain soap, wax, oil, or silicone; or that may negatively affect the quality of installation, durability, appearance, or performance of furnished flooring. Comply with the flooring manufacturers' instructions using manufacturer-recommended techniques and equipment. Do not use solvents.
3. Remove subfloor ridges and bumps. Fill minor or local low spots, cracks, joints, holes, and other defects with leveling and patching compound. Apply, trowel, and float patching

compound to achieve smooth, flat, hard surface. Prohibit traffic until patching compound is cured.

4. Repair damaged sub-floor. Produce a uniform and smooth substrate. Fill cracks, holes, depressions, and similar substrate defects with trowelable leveling and patching compound; remove bumps and ridges.
5. Sweep and vacuum-clean substrates just prior to beginning floor covering installation.
6. Do not install floor coverings until both they and the installation materials are acclimated to the same temperatures as the spaces into which they are installed. Move floor coverings and installation materials into spaces at least 48 before installation.

PART 3 - EXECUTION

3.01 EXAMINATION

A. Verification of Conditions: Before beginning testing, examine project conditions and field-verify measurements affecting the work of this specification section.
   1. Examine substrates scheduled for testing, and other conditions under which such items are tested, including HVAC operation and building enclosure.
   2. Verify that work performed as part of the work of other specification sections conforms to the testing equipment or testing kit manufacturer's requirements; and satisfies all other conditions relating to the quality of testing.

3.02 FIELD QUALITY CONTROL

A. Site Tests and Inspections:
   1. General: Include site tests and inspections as part of the work of this specification section. The Owner's testing and inspection agency performs tests and inspections.
      a. Schedule and arrange all tests and inspections.
      b. Coordinate all work and the final construction schedule with all tests and inspections.
      c. Coordinate tests and inspections with the work of other specification sections, and other specified, required, or necessary tests and inspections.
      d. Furnish all work, equipment, tools, facilities, personnel, and controls necessary for each test and inspection.
      e. Arrange tests and inspections by notifying the Owner, the testing and inspection agency, the installer, the manufacturer's representative, and the Architect at least 5 business days before work is ready for testing or inspection.
      f. Witness all site tests and inspections.
      g. Receive test and inspection reports and distribute to the installer and the manufacturer's representative.
   2. Required Tests: Conduct the following tests on all concrete substrates prior to the installation of any flooring material or component regardless of substrate grade level or age.
      a. MVER Testing (Anhydrous Calcium Chloride Test): Conduct CC tests in conformance with ASTM F 1869.
         1) Test area environmental conditions must match that of the finished floor covering.

2) Doors, windows, and roofing must be installed and the building temperature controlled to a finished building atmosphere.

3) Do not perform tests when the interior building temperature is below 65 deg. F for 72 hours prior to and throughout the duration of testing.

4) The minim required number of test kits is determined by the square footage of areas scheduled to receive finish flooring. Provide at least 3 test kits for the first 1,000 square feet, and at least one additional test kit for each additional 1,000 square feet or fraction thereof, with consideration given to separation of test areas.

5) Time of exposure must be between 60 hours 72 hours.

6) Clean substrate in area to be tested by removing dust solvent, paint, wax, oil, grease, residual adhesive, adhesive removers, curing, sealing, hardening, or parting compounds, alkaline salts, excessive carbonation, or laitance, mold mildew and other foreign materials.

7) Weigh the tape sealed dish on a gram scale with 1/10th gram gradation. Record start weight, date and time on dish's label and instruction document.

8) Unseal dish and expose test according to preprinted test kit instructions.

9) After exposure time has elapsed, retrieve test dish re-seal and re-weigh according to the manufacturer's instructions.

10) Moisture emission rates exceeding 3 pounds may affect coating or covering. Verify permissible RH levels with individual flooring manufacturers.

b. Alkalinity (pH) Testing: Conduct pH test in conformance with ASTM F 710.

1) Perform tests after abrasive removal of concrete surfaces.

2) Place several drops of water on a clean portion of the substrate surface; form a puddle approximately one-inch in diameter. Allow the puddle to set for at least 60 seconds, and then insert the digital alkalinity-pH meter probe into the puddle. Allow the meter to calculate results for 15 seconds and record the meter readings.

3) Concrete substrates must test between pH 8.0 and 10.0 before flooring materials are installed; slabs may not exceed pH 10.0.

4) Readings exceeding pH 10.0 may affect coating or covering. Verify permissible pH levels with individual flooring manufacturers.

c. RH Probe Test: Conduct *in situ* RH probe testing in conformance with ASTM F 2170

1) Concrete floor slabs must be at the in-service temperature and the occupied air space above the slab must be at the in-service temperature and RH far at least 48 hours before taking RH measurements in the substrate.

2) Perform at least 3 tests for the first 1,000 square feet and at least one test for every additional 1,000 square feet or fraction thereof.

3) At below-grade substrates, choose testing locations within 3 feet of each exterior wall.

4) Drill probe holes 40 percent down into the slab for slabs drying from the top only; 20 percent into the slab for slabs drying from top and bottom.

5) Use a vacuum cleaner to remove dust from drilled holes, and allow at least 72 hours for holes to achieve moisture equilibrium within each hole before taking RH measurements.

6) After the 72-hour equilibrium period, insert probes and allow a 30-minute period for each probe to reach temperature equilibrium before measuring RH.

7) Use the RH probe to measure the ambient air temperature and RH above the slab in the vicinity of the hole.

8) RH readings exceeding 75 percent may affect coating or covering. Verify permissible RH levels with individual flooring manufacturers.

3.03 CORRECTION AND REPAIR

A. Non-conforming, damaged, and defective work must be brought into conformance with the Contract Documents. Correct and repair as necessary, without limitation, including arranging all correction and repair work and paying all correction and repair costs, until accepted in writing by the Architect.

B. Corrective and repair work must be performed in conformance with a correction and repair plan submitted to and accepted in writing by the Architect before correction or repair work begins. At a minimum, correction and repair plans must include
   1. written descriptions of non-conforming, damaged, and defective work;
   2. supporting sketches, diagrams, photographs, and other visual depictions of non-conforming, damaged, and defective work; and
   3. similar written descriptions and visual depictions of Contractor-proposed corrections and repairs.

C. Arrange and pay costs for removing and replacing work that cannot be corrected or repaired to the Architect's acceptance.

END OF SECTION

©AWCWEST 18E22 All rights reserved.
RSTLNE, TAGTIS, ELMTC, CLSC2030, CLSC2040

SECTION 09 22 16
LIGHTGAGE METAL FRAMING

PART 1 - GENERAL

1.01 SUMMARY

A. Section Includes:
   1. Metal furring for supporting interior finish materials.
   2. Metal framing for supporting interior partition and ceiling assemblies.
   3. Supplementary components and accessories normally furnished or necessary for a complete installation, whether or not such items are indicated on the Drawings or included in the Specifications.

B. Related Requirements:
   1. Section 05 40 00 for cold-formed metal framing, including manufactured (pre-engineered) headers and metal wall backings.

1.02 SECTION REQUIREMENTS

A. Delegated Design Requirements:
   1. Engineer, fabricate, assemble, and install framing that conforms to the profiles indicated and other Contract Document requirements; meets specified performance criteria; and results in structurally sound, and non-corroding assemblies that accommodate, resist, distribute, or transfer in-service loads without incipient or catastrophic failure.
   2. Maintain visual design concept indicated, including sizes, profiles, and alignments. Deviation from visual design concept is non-conforming work and prohibited without prior written acceptance by the Architect.

B. Qualifications:
   1. Installer: Company or individuals must have at least 5 years' experience installing framing for at least 30 previous projects similar to this project in size, material, design, and complexity.
   2. Supervisors: Individuals must have at least 7 years' experience installing framing for at least 30 previous projects similar to this project in size, material, design, and complexity, including at least 2 years' supervisory experience directing and leading framing installers.
   3. Engineer: Must be a licensed professional structural engineer registered to practice in California having at least 10 years' experience performing the kind of engineering services indicated for at least 20 previous projects similar to this project in size, material, design, and complexity.

C. Submittals: Submit product data, shop drawings, written descriptions of specified qualifications, and delegated design submittals.

PART 2 - PRODUCTS

2.01 MANUFACTURERS

A. Manufacturers: Provide products manufactured by one of the following, or equal.
   1. California Expanded Metal Products Co. (CEMCO)
   2. Clarkwestern Dietrich Building Systems LLC.

3. Olmar Supply Inc.
4. SCAFCO Corp.

2.02 MATERIALS

A. Cold-Formed Metal Framing: ASTM A 1003, ST50 (Structural Grade 50), with at least a G60 coating weight designation (mass designation) on both surfaces with equal coating weight on each surface.

B. Lightgage Metal Framing: ASTM A 645 manufactured from HDG metallic-coated steel sheet conforming to ASTM A 1003, NS33 (Non-Structural Grade 33), with at least a G40 coating weight designation (mass designation) on both surfaces with equal coating weight on each surface.

2.03 COLD-FORMED METAL FURRING

A. Hat Furring Channels:
   1. Products: “FC Series Furring Channel” manufactured by Clarkwestern Dietrich Building Systems LLC, or equal.
   2. Requisite Properties:
      a. Depth: 7/8- or 1-1/2-inch deep channels, as indicated.
      b. Minimum Thickness: At least 43 mils BMT (MSG 18).
      c. Web: 1-1/4 inches wide.
      d. Screw Flanges: 3/4-inch wide.

B. Z-shaped Furring Channels:
   1. Products: “Z-Furring (ZF-Series)” manufactured by Clarkwestern Dietrich Building Systems LLC, or equal.
   2. Requisite Properties:
      a. Depth: One to 3 inches deep, as indicated.
      b. Minimum Thickness: At least 43 mils BMT (MSG 18).
      c. Screw Flanges: 1-1/4 inches wide.

2.04 LIGHTGAGE METAL FURRING

A. Hat Furring Channels:
   1. Products: “Hat” or “F” furring channel manufactured by CEMCO, or equal.
   2. Requisite Properties:
      a. Depth: 7/8- or 1-1/2-inch deep, as indicated.
      b. Minimum Thickness: At least 30 mils BMT (MSG 20).
      c. Web: 1-1/4 inches wide or 2-1/2 inches.
      d. Screw Flanges: 1/2-inch wide.

B. Z-shaped Furring Channels:

1. Products: “CEMCO Z - Furring Channel” manufactured by CEMCO, or equal.
2. Requisite Properties:

    a. Depth: 7/8-inch.

    b. Minimum Thickness: At least 30 mils BMT (MSG 20).

    c. Screw Flanges: 1-1/4 inches wide.

C. Standard Resilient Channels:
1. Products: “RC1-X” manufactured by CEMCO, or equal.
2. Requisite Properties:

    a. Depth: 1/2-inch deep.

    b. Minimum Thickness: At least 30 mils BMT (MSG 20).

    c. Screw Flanges: 1-1/4 inches wide.

D. Resilient Channels for Acoustical Applications:
1. Product: “RC Deluxe Resilient Channel (RCSD)” manufactured by Clarkwestern Dietrich Building Systems LLC, or equal.
2. Requisite Properties:

    a. Depth: 1/2-inch deep.

    b. Minimum Thickness: At least 27 mils BMT (MSG 22).

    c. Screw Flanges: 1-1/2 inches wide.

E. Resilient Sound Isolation Clips:
1. Description: Molded rubber and steel resilient sound isolation wall and ceiling clips.
2. Products: Provide one of the following, or equal.

    a. “IsoMax” manufactured by Kinetics Noise Control, Inc.

    b. “RSIC-1” manufactured by PAC International, Inc.

    c. “GenieClip Resilient Sound Isolation Clip” manufactured by Pliteq, Inc.

2.05 LIGHTGAGE STUD FRAMING

A. Studs:
1. Description: Pre-punched C-shaped framing members with manufacturer’s standard knockout sizing and spacing.
2. Product: “Viper-X Stud” manufactured by CEMCO, or equal.
3. Requisite Properties:

    a. Depth: Indicated on the Drawings.

    b. Minimum Thickness: At least 30 mils BMT (MSG 20).

    c. Flanges: 1-7/16-inch wide stiffened flanges with at least 3/8-inch returns (lip).

B. Tracks (Top and Bottom Runners):
   1. Description: Un-punched U-shaped runners manufactured from the same material to corresponding stud sizes and gages.
   2. Product: “Viper-X Track” manufactured by CEMCO, or equal.
   3. Requisite Properties:
      a. Depth: Indicated on the Drawings.
      b. Minimum Thickness: At least 30 mils BMT (MSG 20).
      c. Flanges: At least 1-1/2-inch wide unstiffened flanges.

C. Deflection Tracks:
   1. Description: Slotted roll- or brake-formed track installed in head-of-wall deflection conditions to accommodate vertical movement caused by normal head-of-wall and floor extension or compression.
   2. Products: “CEMCO Slotted Track (CST)” or “SLP-TRK” manufactured by CEMCO, or equal.

D. Cold Rolled Channel (CRC) Bridging:
   1. Description: Un-punched U-shape stiffeners installed in both load-bearing and non-load bearing walls to help resist stud twisting.
   2. Requisite Properties:
      a. Size: 1-1/2-inch wide by 1/2-inch deep.
      b. Minimum Thickness: At least 54 mils BMT (MSG 16).
      c. Flanges: 1-1/2 inches wide unstiffened flanges.
   3. Manufactured Bridging Clips: “SUBH Wall Stud Bridging Connectors” manufactured by CEMCO, or equal.

E. Flat Strap Bridging (Strapping):
   1. Application: Flat sheet installed to provide resistance to stud rotation and minor axis buckling under loads for studs deeper than 6 inches.
   2. Requisite Properties:
      a. Width: Between 2 and 20 inches, as indicated or necessary.
      b. Minimum Thickness: At least 54 mils BMT (MSG 16).

2.06 SPECIALTY FRAMING

A. Corner Angles:
   1. Description: Utility angles installed as a connection strut or angle, as corner reinforcement, or other various framing applications.
   2. Requisite Properties:
      a. Minimum Thickness: At least 30 mils BMT (MSG 20).
      b. Legs: 2- or 3-inch wide legs, as indicated, unless a wider or uneven leg size is explicitly indicated; or is otherwise supplied, required, recommended, authorized, or accepted by the manufacturer.

2.07 ACCESSORIES

A. Partition Closures:
   1. Description: Silicone conforming to ASTM D 2000, 4GE 709 M.
   2. Application: Narrow resilient termination of a partition and sound deterrent; allows exterior glass deflection during positive and negative wind loading
   3. Product: “WFR2” manufactured by EMSEAL or “Partition Closures” manufactured by Michael Rizza Co. Inc., or equal.

B. Mullion Closures:
   1. Description: Factory-assembled, spring loaded, pre-finished aluminum adjustable partition closure.
   2. Application: Used for vertical junctures or partitions and window walls
   3. Product: “Mullion Mate” manufactured by Gordon, Inc., or equal.

C. Low Partition Wall Floor Anchors: “Floor Anchor” stud reinforcement manufactured by Pinquist Tool & Die Company, Inc., or equal.

D. Steel Beam and Column Wallboard Clips: “The Claw” beam clips manufactured by Claw International, or equal.

E. Shims: Load bearing, non-leaching, high-density multimonomer plastic.

F. Screw Fasteners: Provide #8-32 UNC 2B (0.164-inch shank diameter, 32 threads per inch) by at least one-inch long, pan head, coarse thread, self-piercing or self-drilling as applicable, chromate finish zinc-plated steel screw fasteners, unless another fastener type is explicitly indicated; or supplied, required, recommended, or accepted by the manufacturer for actual in-service conditions applicable to the project.

G. Power-Actuated Fasteners:
   A. Description: ICC-ES-approved anchors conforming to California Building Code Category 1, Seismic Zones A-F.
   B. Manufacturer: Provide products manufactured by Hilti, Inc., or equal.

H. Fastenings: Provide backings, inserts, loose connection hardware, fasteners, anchors, attachments, connectors, and other items supplied, required, recommended, or accepted by the manufacturer for actual in-service conditions applicable to the project.

I. Other Accessories: Provide other accessories and secondary items normally furnished or necessary for a complete installation; or supplied, required, recommended, or accepted by the manufacturer for actual in-service conditions applicable to the project.

PART 3 - EXECUTION

3.01 INSTALLATION REQUIREMENTS

A. General:
   1. Ensure proper supervision practices are followed at the project site before the installer begins work and at all times during installation.
   2. Verify in-place supporting and adjacent construction conforms to the manufacturer’s requirements or recommendations, and satisfies all other conditions that might affect the quality of installation or the durability, appearance, or performance of installed and adjacent items.

3. Install framing using materials and methods required, recommended, or accepted by the manufacturer, along with manufacturer-recommended accessories and techniques.
4. Set framing true to line; plumb, level, and square without warp or rack; with flush, well-fitted joints; and in alignment with adjacent construction.
5. Securely attach framing in place to supporting construction.

B. Installation Tolerances: Install framing within the following tolerance variations.
1. Maximum Out of Plumb: Not more than L/960 of span, or 1/8-inch in 10 feet.
2. Maximum Out of Level: Not more than L/960 of span, or 1/8-inch in 10 feet,
3. Maximum Out of Plane: Fastening surfaces of adjacent framing members may not vary by more than 1/8-inch.
4. Maximum Stud Spacing Variance: Not more than 1/8-inch. Cumulative error may not exceed minimum fastening requirements of sheathing or other finishing materials.

C. Correction and Repair:
1. Correct deficiencies that do not conform to the Contract Documents.
2. Repair non-conforming, damaged, and defective work.
3. Installed framing must be warrantable. Do not install, correct, or replace framing in a manner that is un-warrantable by the manufacturer or that results in any warranty or guarantee becoming void.

D. Protection:
1. Protect installed framing in place from deterioration and damage until covering framing.
2. Remove protection when it's no longer needed and before covering framing.

END OF SECTION

©AWCWEST 18E22 All rights reserved.
RSTLNE, TAGDSC, ELMTC, CLSC1010

SECTION 09 22 38
CEMENT PLASTER BASE

PART 1 - GENERAL

1.01 SUMMARY

A. Section Includes:
   1. Supporting framework.
   2. Cementitious scratch and brown coats.
   3. Supplementary components and accessories normally furnished or necessary for a complete installation, whether or not such items are indicated on the Drawings or included in the Specifications.

B. Related Requirements:
   1. Section 07 25 13 for sheet weather-resistive barriers.

1.02 REFERENCES

A. Abbreviations and Acronyms:
   1. AR: Alkali Resistant.

B. Definitions:
   1. Manufacturer: Means the plaster manufacturer, unless otherwise indicated.

1.03 ADMINISTRATIVE REQUIREMENTS

A. Preinstallation Meeting:
   1. Hold a meeting after submittal approval and at least 10 business days before beginning installation.
   2. During the meeting, review the Contract Documents, submittals, project conditions, and installation sequence and methods, including special details and conditions that might affect installation
   3. Identify and discuss adverse or unfavorable conditions detrimental to protecting stored materials or to installation; or to the quality, durability, appearance, or performance of installed plaster. Resolve each condition.
   4. Finalize construction schedule.
   5. Record significant discussions and distribute meeting minutes. Do not begin installation until disagreements are successfully resolved to the satisfaction of all parties.

1.04 SUBMITTALS

A. Action Submittals: Submit the following for responsive action (formal review and approval).
   1. Product Data:

      a. Submit manufacturer’s product data, specifications, typical installation details, and all other information necessary to show conformance to the Contract Documents, excluding material safety data sheets (MSDSs), which are returned to the Contractor without review or responsive action.

b. Submit sample warranties with warranty periods, terms, conditions, exclusions, and remedies explicitly defined for each warranty, including clear warranty period start dates. (e.g., date of manufacture, purchase, installation, Beneficial Occupancy, Substantial Completion, Final Completion, etc.)

2. Shop Drawings: Include project-specific dimensioned details drawn to scale showing conditions not detailed on the product data; or that are detailed, but not in a manner specific to the project.
3. Samples: Submit at least 18-inch square representative color stepped samples of each plaster type, color, finish with typical trim and joints intersecting at the center of each sample. Stepped samples must include each coat or layer, including prime coat, separately identified by manufacturer's name, and product name or stock number.

B. Informational Submittals: Submit the following for information (informal review: responsive action not expected or required, except to record non-conformance with submittal requirements).
1. Manufacturer's Instructions: Submit manufacturer-prepared published instructions for proper installation of furnished plaster.

a. If manufacturer's instructions are unavailable or do not apply to specific project conditions, then consult the manufacturer's representative and obtain project-specific supplemental instructions printed on manufacturer's letterhead.

b. Promptly distribute supplemental instructions to the Architect, who may have comments that lead to contract modifications or minor changes in the work.

2. Qualification Statements: Submit written descriptions confirming experience specified in QUALITY ASSURANCE article below.

C. Closeout Submittals: Submit the following to the Architect as a condition of project closeout.
1. Warranty Documentation: Submit final warranties signed by the manufacturer's representative with complete terms indicated for all warranties covering items furnished or installed under this specification section.

1.05 QUALITY ASSURANCE

A. Source Limitations:
1. Plaster must be obtained through one source from the same manufacturer (to ensure compatibility, regulatory conformance, and a warrantable installation).

a. Certain items may be obtained from more than one manufacturer, but only when used for separate installations.

b. Items provided for each different installation must be obtained from the same source and manufacturer.

2. Provide secondary materials, components, accessories and other items from sources required, recommended, or accepted by the primary manufacturer for actual in-service conditions applicable to the project.

B. Qualifications:
1. Installer: Company or individuals must have at least 5 years' experience installing plaster for at least 30 previous projects similar to this project in size, material, design, and complexity.
2. Supervisors: Individuals must have at least 7 years' experience installing plaster for at least 30 previous projects similar to this project in size, material, design, and complexity, including at least 2 years' supervisory experience directing and leading plaster installers.

C. Mockups: If an *ex-situ* exterior wall integrated mockup is required for this project, then integrate plaster into the mockup as part of the work of this specification section.

1.06 HANDLING

A. Receiving: Inspect all deliveries for deteriorated, damaged, and defective items.
   1. Reject items that are not packaged in a manner that prevents damage; or that exhibit deterioration or damage or have damaged or open packaging or containers.
   2. Unload and store only inspected and accepted items.

B. Storage: Store unloaded items as shipped and in conformance with manufacturer's instructions and other requirements and recommendations for storage. Furnish adequate dunnage during storage.
   1. Prevent stored items from contacting the floor or ground and from deterioration and damage.
   2. If items are not stored in an enclosed location, then cover the tops and sides with securely-tied, waterproof, and breathable covers. Unvented polyethylene tarpaulins do not qualify as breathable covers and are prohibited. (due to potential accumulation of moisture beneath tarpaulin during certain environmental conditions)
   3. Incline covered items to ensure maximum drainage of accumulated moisture.
   4. Do not leave items uncovered where they might be exposed to weather or become wet from rain, mist, relative humidity, condensation, frost, and other sources of moisture; or exposed to other sources of deterioration and damage, including heat and sudden changes in temperature, and UV exposure beyond manufacturer-recommended limits.

C. Handling: Handle items in conformance with manufacturer's instructions and other requirements and recommendations, and in a manner that that prevents damage.
   1. Avoid damage to packaging and containers, and contamination of contents.
   2. Rotate inventory; do not use items the shelf life of which is expired.

D. Damaged Item Replacement: Promptly remove and replace deteriorated, damaged, or defective plastering materials with undamaged new plastering materials that do not exhibit deterioration, damage, or defects.

E. Packaging Waste Management: Do not burn or bury construction waste at the project site. Remove and legally dispose of all construction waste away from the project site.

1.07 PROJECT CONDITIONS

A. Ambient Conditions: Install plaster only when ambient temperature, RH, and other environmental conditions fall within ranges required, recommended, or accepted by the manufacturer.

B. Other Conditions:
   1. Substrate Tolerance: Surfaces receiving plaster finishes must be flat with 1/4-inch within any 10-foot radius.
   2. Deflection: Maximum of substrate deflection under positive or negative design loads must not exceed L/360 of span.

1.08 WARRANTY

A. Manufacturer Warranty: Furnish to the Owner a written manufacturer warranty for products, components, and accessories against all patent and latent defects, and incipient and catastrophic failure for 5 years.

B. Installer Guarantee: Furnish to the Owner a written guarantee for the work of this specification section against all defects in materials and workmanship for 2 years from date of acceptance. Guarantees must be properly prepared and signed on the guarantee form in Division 01.

PART 2 - PRODUCTS

2.01 SUPPORTING FRAMEWORK

A. Heavy-Duty Welded Wire Lath:
   1. Description: Self-furring galvanized steel welded wire fabric lath fabricated in conformance with the requirements of ASTM C 847, ASTM C 933, ASTM C1032, ASTM C1063 and Appendix.
   2. Application: Fabricated for use as an alternative to 2.5 or 3.4 pound per square yard diamond mesh metal lath specified in ASTM C 847 and as an alternative to 1.4 pound per square yard woven wire lath specified in ASTM C 1032.
   3. Product: “Mega Lath” manufactured by Structa Wire Corp. (ICC-ES Report No. ESR-2017), or equal.
   4. Requisite Properties:
      a. Minimum Size: 30 inches wide by 108-foot long rolls. (30 square yards)
      b. Wire and Mesh Sizes: 17-gage galvanized steel wire welded to form 0.7-inch by 1.5-inch openings.
      c. Nominal Weight: 1.95 pounds per square yard.
      d. Style: Self-furring.
      e. Minimum Groove Depth: At least 1/4-inch.

B. Plastic Lath:
   1. Description: Rustproof, self-furring, damage-resistant plastic lath sheets conforming to ASTM C 1764, ASTM C 1780, ASTM C 1787, and ASTM C 1788.
   2. Application: Used as a non-rusting alternative to metal lath for interior and exterior vertical applications.
   3. Restrictions: Installation over open framing; and in horizontal applications or soffits is prohibited.
   4. Products: “Ultra-Lath Plus Product No. PDM2796-25” manufactured by Plastic Components, Inc., or equal.
   5. Requisite Properties:
      a. Minimum Size: At least 27 inches wide by 96 inches long.
      b. Style: Self-furring.
      c. Minimum Groove Depth: At least 1/4-inch.

C. Galvanized Steel Trim:
   1. Description: Zinc coated (HDG) steel trim conforming to ASTM C 847, ASTM C 933, ASTM C1032, ASTM C1063 and Appendix.
   2. Manufacturers: Provide products manufactured by one of the following, or equal.
      a. California Expanded Metal Products Co. (CEMCO)
      b. Clarkwestern Dietrich Building Systems LLC.
      c. Frye Reglet.
      d. Stockton Products.

3. Products: “Water Management Products” manufactured by California Expanded Metals Co. (CEMCO), or equal.

    a. Foundation Weep Screeds: “#7 Foundation Sill Screed (FHA Screed)”, or equal, with at least a 3-1/2-inch flange and weep holes.

    b. Extended Weep Screed: “#7 Extended Foundation Screed”, or equal, one-piece flashing weep screed for applications at decks were flashing is needed to protect waterproof membrane.

    c. Base Flashing: “#17 Base Flashing”, or equal, one-piece flashing weep screed for applications at decks were flashing is needed to protect waterproof membrane.

    d. Drip Head: “#6 Drip Head”, or equal, for application above vents, doors, windows, joints, and as indicated on the Drawing; water can weep out of the slope leg and solid return leg used for sealant application.

    e. Drip Edge: “#12 Soffit Drip Edge”, or equal, used at soffits and recessed windows; provides drainage and drip edge.

    f. Flashing Screed: “#3 Flashing Screed”, or equal, one-piece Z-flashing and weep screed combination for application at window head.

    g. Casing Beads: “J-Series Casing Bead”, or equal, non-perforated casing bead; used as a stop to terminate plaster edge in a clear straight line at head of plaster or jamb conditions of doors, windows.

    h. Expansion Joints: “M-SLIDE EXPANSION JOINT”, or equal; 2-piece plaster accessories are prohibited.

    i. Horizontal Control Joint: “#15 SOLID LEG Control Joint”, or equal, one-piece horizontal control joint.

    j. Vertical Control Joints: “#XJ15 Expanded Wing Control Joint (Double J)”, or equal, used to relieve stresses in large plastered areas of walls, ceilings and plaster areas.

    k. Transition Control Joint: “#9 Transition Control Joint”, or equal, one-piece drainage accessory for application at substrate transitions between masonry and framed walls.

    l. Control Joints: “#15 Double V Control Joint”, or equal, used to relieve stresses in large plastered areas of walls, ceilings and plaster areas.

    m. Clean-Finish Control Joints: “#XJ15 Expanded Wing Control Joint (Double J)”, or equal, used to relieve stresses in large plastered areas of walls, ceilings and plaster areas.

    n. Cornerbeads: “#2A-Expanded Corner Bead”, or equal, used for reinforcing exterior corners, or equal.

    o. Cornerite: Pre-shaped diamond mesh metal lath formed with minimum 3-inch legs to minimum 105 degrees for a snug fit; used as a reinforcement on inner corners.

    p. Strip Lath: Welded wire metal lath formed in at least 4-inch wide strips with smooth outer edges. Used where small strips of lath are required so cutting is limited; and around window and door frames as butterfly reinforcement.

4. Requisite Properties:

a. Size: Trim and accessories depths must match the thicknesses and number of plaster coats required.

b. Material: Zinc Coated (HDG) Steel Sheet conforming to ASTM A 653, CS Type B (commercial steel), with at least a G90 (galvanized) minimum coating designation and equal coating weight on each surface.

c. Surface Finish: Provide regular spangle surface finish.

d. Surface Treatment: Provide oiled surface treatment. (needed for enhanced formability)

D. Plastic Trim:

1. Description: PVC plaster trim and accessories conforming to ASTM D 1784 cell classification 13244C, ASTM C 1063, and ASTM D 4216.
2. Application: Used as a non-rusting alternative to metal trim for interior and exterior vertical applications.
3. Products: Provide the following manufactured by Plastic Components, Inc., or equal.

a. Foundation Weep Screeds: “Sill Screed (FHA Screed)”, or equal, with at least a 3-1/2-inch flange and weep holes.

b. Drip Head: “Drip Edge for use above Exterior Doors”, or equal, for application above vents, doors, windows, joints, and as indicated on the Drawing.

c. Flashing Screed: “Z Flashing for Floor Line Applications”, or equal, one-piece Z-flashing.

d. Casing Beads: “Medium Flange Casing Bead”, or equal, un-weeped casing bead; used as a stop to terminate plaster edge in a clear straight line at head of plaster or jamb conditions of doors, windows.

e. Expansion Joints: “M Control Joint”, or equal; 2-piece plaster accessories are prohibited.

f. Control Joints: “V Control Joint” and factory-assembled intersections, or equal, used to relieve stresses in large plastered areas of walls, ceilings and plaster areas.

g. Plaster Reveals: “ULTRA-TRAC Aesthetic Stucco Reveals” and factory-assembled intersections, or equal, used to form patterns and reveals in walls; provide profiles indicated on the Drawings.

h. Corner Control Joints: “Inside Corner Joint”, or equal, one-piece control joint used at inside angles of walls and ceilings.

i. Cornerbeads: “#2”, or equal, used for reinforcing exterior corners.

j. Strip Lath: “Ultra-Lath Plus Product No. PDM4-25” formed in at least 4-inch wide strips. Used where small strips of lath are required so cutting is limited; and around window and door frames as butterfly reinforcement.

2.02 CEMENTITIOUS SCRATCH AND BROWN COATS

A. Description: Pre-blended mixture conforming to ASTM C926, including cement, reinforcement fibers, hydrated lime, and proprietary ingredients for scratch and brown coats.

B. Manufacturers: Provide products manufactured by one of the following, or equal.

1. Dryvit Systems, Inc.
2. Omega Stucco.

3. Parex USA, Inc.
4. Sto Corp.

C. Product: “Parex Fiber-47 Armourwall 300 Scratch and Brown Sanded or Concentrate” manufactured by Parex USA, Inc., or equal.

D. Components:
1. Cement: Portland cement conforming to ASTM C 150 Type I.
2. Fine Aggregate: Dense graded (well-graded) air dry natural sands conforming to ASTM C 897 requirements for gradation, deleterious substances and organic impurities.
3. Hydrated Lime: ASTM C 206, Type S. (special finishing hydrated lime)
4. Fiber Reinforcement: Nylon or polypropylene monofilament fibers conforming to ASTM C 1116 Type III. (synthetic fiber-reinforced concrete or shotcrete) AR chopped glass fiber strands are prohibited.

E. Accessories:
1. Admix and Bonding Agent: “Adacryl” 100-percent acrylic emulsion additive for Portland cement-based products manufactured by Parex USA, Inc., or equal
2. Mix Water: Provide fresh, clean, clear, potable water from a domestic source. Water must conform to ASTM C 1602 and be free of oil, grease, waxy films, curing compounds, release agents, and other deleterious materials, including salts, acids, alkalis, organic materials, detergents, and other matter that might negatively affect plaster quality, durability, appearance, or performance.

2.03 ACCESSORIES

A. Tie Wire: At least 0.048-inch diameter (ASW 18) soft temper zinc-coated wire conforming to ASTM A 641 Class 3 or A coating.

B. Fasteners for Concrete and CMU: At least 3/4-inch long hardened drive pin power-actuated fasteners (PAF) with 1/2-inch diameter galvanized disc or washer; or 9-gauge, minimum 3/8-inch diameter head, minimum 3/4-inch long concrete nails.

C. Fasteners for Metal Framing: 0.164-inch shank diameter (#8-32 UNC) by at least 1-1/4-inch-long Philips drive socket, bugle or wafer head, self-drilling stainless steel, bi-metal, duplex anti-corrosive steel, 3-coat anti-corrosive steel, or ceramic-coated anti-corrosive steel screw fasteners specified in Section 05 05 23, unless another fastener type is explicitly indicated; or is otherwise supplied, required, recommended, or accepted by the manufacturer.

D. Other Accessories: Provide accessories and secondary items normally furnished or necessary for a complete installation; or supplied, required, recommended, or accepted by the manufacturer for actual in-service conditions applicable to the project.

2.04 MIXING

A. Factory-Mixed Products:
1. Open plaster packaging and containers only as required for use and mix only in designated areas.
2. Thoroughly agitate and stir plaster to a uniform and smooth consistency suitable for proper installation.
3. Do not reduce, alter, or introduce foreign materials into plaster, except in conformance with manufacturer’s instructions and other requirements and recommendations.

B. Site Mixing: Batch mix plaster in conformance with manufacturer's instructions and other requirements and recommendations, using manufacturer-recommended techniques and manufacturer-recommended mechanical mixing equipment, which must be clean and free of material from previously mixed batches before charging each subsequent batch.
   1. Measure mix materials using only graduated mixing containers and calibrated mixing equipment. Shovels do not qualify as graduated mixing containers or calibrated equipment, and are prohibited from measuring or dispensing mix materials.
   2. Thoroughly agitate and stir mix materials to a uniform and smooth consistency suitable for proper installation.
   3. Do not reduce, alter, or introduce foreign materials into mix materials, except in conformance with manufacturer's instructions and other requirements and recommendations.
   4. Do not use caked or lumpy materials; or materials that are irregular, too thick or too thin, or that are partially set.

PART 3 - EXECUTION

3.01 EXAMINATION

A. Oversight: Ensure an adequate number of supervisors are present and proper supervision practices are followed at the project site before the installer begins work and at all times during installation.

B. Verification:
   1. Verify in-place supporting and adjacent construction conforms to the manufacturer's requirements or recommendations and satisfies all other conditions that might affect the quality of installation or the durability, appearance, or performance of installed and adjacent items.
   2. Verify items penetrating plaster are installed.

C. Evaluation and Assessment:
   1. Identify project conditions that do not conform to the manufacturer's instructions and other requirements and recommendations.
   2. Perform or arrange and pay costs without reimbursement from Owner for all remedial work necessary to correct or improve deficient conditions, without limitation, before the installer begins work.

3.02 PREPARATION

A. Protection:
   1. Work Area Protection: Protect work areas from dust and other airborne contaminants during surface preparation and plaster finish installation.
   2. Adjacent Material Protection: Protect adjacent surfaces against soiling and damage. Utilize drop cloths, shields, masking, barricades, and other items necessary to protect adjacent surfaces.
   3. Opening Protection: Close and protect drains and other openings and penetrations to prevent intrusion or migration of liquids.

B. Substrate Preparation: Prepare substrates as required, recommended, or accepted by the manufacturer without limitation; and in a manner that does not result in any specified or other warranty or guarantee becoming void.

3.03 INSTALLATION

A. General Requirements:
   1. Install plaster using materials and methods required, recommended, or accepted by the manufacturer, along with manufacturer-recommended accessories and techniques.
   2. Securely attach plaster trim and lath in place to supporting construction. Continuous expansion and control joints must be installed at locations in conformance with ASTM C1063 and ASTM C926.
   3. Completed work must match approved samples and mockups, as accepted by the Architect.
   4. Installed plaster must be warrantable. Do not install, correct, or replace plaster in a manner that results in any warranty or guarantee becoming void.

B. Special Techniques:
   1. Provide sufficient manpower and equipment to ensure a continuous operation free of cold joints, scaffold lines, texture variations, and other objectionable conditions.
      a. Plaster surfaces full height and width between control joints in one operation once the application of any coat has begun.
      b. Stop plaster at control joints, edges, or corners only.
      c. Apply plaster flush with metal trim members and make corners square and true.
   2. Finish plaster in a true, plumb or level plane flush with grounds.
   3. Finish plaster flush with metal frames and other built-in metal items or accessories that act as a plaster ground unless otherwise indicated. Where casing bead does not terminate plaster at metal frame, cut base coat free from metal frame before plaster sets and groove finish coat at junctures with metal. Apply sealant in grove to metal frame.
   4. Provide plaster surfaces that are ready to receive field-applied finishes indicated.
   5. Protection Measures during Application and Cure:
      a. Protect plaster products in conformance with manufacturer’s instructions.
      b. Protection measures must shield the completed scratch, brown and finish coat applications from direct sunlight and wind exposure (i.e., provide dark colored coverings or barriers).
      c. The combination of curing and protection measures that are employed must prevent drying, uneven or excessive evaporation and strong natural or artificial blasts of dry air during the curing period.

C. Plaster Accessory Installation:
   1. Install with surfaces and edges plumb, level and in alignment with a tolerance of not more than 1/8-inch in 5 feet. Shim as required and align joints with concealed splice or tie plates.
      a. Use single length pieces wherever length of run does not exceed longest standard stock length available.
      b. Miter or cope at corners with hairline joints, and seal with sealant specified in Section 07 92 00. Seal butt splices in the same manner.
      c. Attach securely to supports with same fasteners and spacing as required for metal lath. Wire-tie at no less than 6-inches-on-center to metal lath.
   2. Install foundation weep screed.
   3. Install corner reinforcement.

4. At plaster terminations, provide casing bead at the following locations:

    a. Where plaster termination abuts other finishes, isolate casing bead from contact with adjacent finishes with 1/4-inch thick tape sealant specified in Section 07 92 00.

    b. Where plaster termination is not covered by another finish or applied trim, provide cased opening by installing casing bead around perimeter of opening as indicated.

D. Control Joint Installation:

1. Install control joints in specific locations indicated on the Drawings, approved by Architect, and as follows.

    a. As required to delineate plasterwork into areas (panels) of the following maximum sizes:

        1) Vertical Surfaces: 144 sq. ft.

        2) Horizontal and Other Non-Vertical Surfaces: 100 sq. ft.

    b. At distances between control joints of not greater than 18 feet on center

    c. As required to delineate plasterwork into areas (panels) with length-to-width ratios of not greater than 2-1/2:1.

    d. Where control joints occur in surface of construction directly behind plaster.

    e. Where plasterwork areas change dimensions, to delineate rectangular-shaped areas (panels) and to relieve the stress that occurs at the corner formed by the dimension change.

2. Wire tie to metal lath at maximum 6 inches on center. Do not attach horizontal control joints to vertical control joints at intersections across the joint.
3. Install vertical control joint first, continuous from top to bottom of wall.
4. Install horizontal control joints last and split where it meets the vertical control joint.
5. Install joints plumb, level, evenly spaced, at locations and spacing indicated, and in one piece.

E. Metal Lath Installation:

1. Comply with the lath manufacturer’s printed installation instructions, and with ASTM C 1063 and Appendix, and the CBC.
2. Unless otherwise indicated, install all horizontal trims, joints, and accessories prior to installing lath.
3. Apply metal lath in conformance with the manufacturer’s published installation standards.
4. Apply lath taut with long dimension at right angle to supports.
5. Stagger vertical joints. Lap end joints at least one inch, and lap horizontal joints at least 1/2-inch.
6. Where end laps occur between framing members, wire-tie ends at not more than 9 inches on center.
7. Cut lath at expansion and control joint locations. Lath must be secured to expansion and control joints at each side of joints and lapped or spliced at interior and exterior corners.
8. Hold lath 1/4-inch clear of items projecting through the plaster.
9. Attach lath through WRB and sheathing into supporting construction at 6 inches on center.

F. Scratch Coat Installation:

1. Apply with sufficient material to cover well and sufficient pressure to form good, full keys. Mix and apply scratch coat and admix and bonding agent products in conformance with manufacturer's published instructions.
2. Minimum thickness of scratch coat shall be 3/8-inch when measured from backing to crest of scored plaster.
3. Scratch before plaster hardens to provide sufficient mechanical key for brown coat. Moist cure continuously for a minimum of 48 hours in conformance with ASTM C 926 and building codes, including weekends and holidays.
4. Score horizontally.

G. Brown Coat Installation:
1. Surface of the scratch coat must be dampened with fog spray prior to application of the brown coat. Do not over-saturate.
2. Apply brown coat approximately 3/8-inch thick at a uniform thickness that matches the grounds of the accessories. Bring to a true, even surface by rodding and floating and leave slightly rough, uniform texture to receive the finish coat.
3. Begin floating only after hydration of the cement has commenced, and sufficient moisture has evaporated so that surface sheen will disappear, but before plaster has become too rigid to be moved under the float.
4. Moist cure continuously for at least 48 hours in conformance with ASTM C 926 and building codes, including weekends and holidays.

    a. Specified moist curing period is a minimum requirement.

    b. Determine the most effective procedure for curing and time lapse between applications of coats based upon climatic and job conditions.

    c. Fog as frequently as required to prevent loss of moisture from the plaster. Avoid erosion damage to the plaster surface.

H. Finish Coat:
1. Apply finish coat not less than 7 days after brown coat has been applied. Dampen brown coat thoroughly and apply finish coat to a uniform minimum thickness of 1/8-inch to match approved mockup. Correct irregularities prior to application.

3.04 CORRECTION AND REPAIR

A. Non-conforming, damaged, and defective work must be brought into conformance with the Contract Documents. Correct and repair as necessary, without limitation, including arranging all correction and repair work and paying all correction and repair costs, until accepted in writing by the Architect.

B. Corrective and repair work must be performed in conformance with a correction and repair plan submitted to and accepted in writing by the Architect before correction or repair work begins. At a minimum, correction and repair plans must include
1. written descriptions of non-conforming, damaged, and defective work;
2. supporting sketches, diagrams, photographs, and other visual depictions of non-conforming, damaged, and defective work; and
3. similar written descriptions and visual depictions of Contractor-proposed corrections and repairs.

C. Arrange and pay costs without reimbursement from Owner for removing and replacing work that cannot be corrected or repaired to the Architect's acceptance.

3.05 CLEANING

A. Cleaning Work: Clean spills, stains, soiling, overspray, and fallout from adjacent surfaces.
   1. Use cleaning materials, equipment, and accessories supplied, and means, methods, techniques, and procedures required, recommended, or accepted by the manufacturer.
   2. Do not use cleaning materials or procedures known to change, or that might change, the appearance of exposed finishes or adjacent surfaces; or cause deterioration or damage to exposed finishes or adjacent surfaces.
   3. Protect adjacent surfaces not being cleaned from staining, deterioration, damage, or other detrimental effects caused by cleaning.
   4. Arrange and pay costs without reimbursement from Owner for removing and replacing work that cannot be cleaned to the Architect's acceptance.

B. Waste Management: After completing the work of this specification section, leave work areas free from debris, waste, scrap, equipment, tools, and other items.

3.06 PROTECTION

A. Protect installed plaster in place from soiling, deterioration, and damage until Substantial Completion.

B. Do not store anything adjacent to or against installed plaster unless it is protected from damage, as accepted in writing by the manufacturer's representative. Do not use installed plaster as work surfaces.

C. Remove protection when it's no longer needed and before Substantial Completion.

END OF SECTION

©AWCWEST 18E22 All rights reserved.
RSTLNE, TAGDSC, ELMTB, CLSB2010, CLSB3080, CLSB3090

SECTION 09 24 43
POLYMER-MODIFIED PORTLAND CEMENT PLASTERING

PART 1 - GENERAL

1.01 SUMMARY

A. Section Includes:
   1. Acrylic plaster finish.
   2. Cementitious scratch and brown coats.
   3. Supporting framework.
   4. Supplementary components and accessories normally furnished or necessary for a complete installation, whether or not such items are indicated on the Drawings or included in the Specifications.

B. Related Requirements:
   1. Section 07 25 13 for sheet weather-resistive barriers.

1.02 SECTION REQUIREMENTS

A. Qualifications:
   1. Installer: Company or individuals must have at least 5 years' experience installing plaster for at least 30 previous projects similar to this project in size, material, design, and complexity.
   2. Supervisors: Individuals must have at least 7 years' experience installing plaster for at least 30 previous projects similar to this project in size, material, design, and complexity, including at least 2 years' supervisory experience directing and leading plaster installers.

B. Submittals: Submit product data, shop drawings, samples, and written descriptions of specified qualifications.

C. Preinstallation Meeting:
   1. Hold a meeting after submittal approval and at least 10 business days before beginning installation.
   2. During the meeting, review the Contract Documents, submittals, project conditions, and installation sequence and methods, including special details and conditions that might affect installation
   3. Identify and discuss adverse or unfavorable conditions detrimental to protecting stored materials or to installation; or to the quality, durability, appearance, or performance of installed plaster. Resolve each condition.
   4. Finalize construction schedule.
   5. Record significant discussions and distribute meeting minutes. Do not begin installation until disagreements are successfully resolved to the satisfaction of all parties.

D. Mockups: If an *ex-situ* exterior wall integrated mockup is required for this project, then integrate plaster into the mockup as part of the work of this specification section.

E. Manufacturer Warranty: Furnish to the Owner a written manufacturer warranty for products, components, and accessories against all patent and latent defects, and incipient and catastrophic failure for 5 years.

PART 2 - PRODUCTS

2.01 SUPPORTING FRAMEWORK

A. Heavy-Duty Welded Wire Lath: Conform to ASTM C 847, ASTM C 933, ASTM C1032, ASTM C1063 and Appendix.
   1. Description: Self-furring welded wire fabric lath fabricated for use as an alternative to 3.4 pound per square yard diamond mesh metal lath specified in ASTM C 847.
   2. Application: Fabricated for use as an alternative to 3.4 pound per square yard diamond mesh metal lath specified in ASTM C 847 and as an alternative to 1.4 pound per square yard woven wire lath specified in ASTM C 1032.
   3. Products: “Mega Lath” manufactured by Structa Wire Corp. (ICC-ES Report No. ESR-2017), or equal.
   4. Requisite Properties:
      a. Type: Double wire for screw penetration.
      b. Size: Minimum 28 inches wide by minimum 98 inches wide.
      c. Thickness: 17-gage.
      d. Style: Self-furring over continuous sheathing.
      e. Groove Depth: 1/4-inch.

B. Galvanized Steel Trim:
   1. Description: Zinc coated (HDG) steel trim conforming to ASTM C 847, ASTM C 933 (Standard Specification for Welded Wire Lath), ASTM C1032 (Standard Specification for Woven Wire Plaster Base), ASTM C1063 (Standard Specification for Installation of Lathing and Furring to Receive Interior and Exterior Portland Cement-Based Plaster) and Appendix.
   2. Manufacturers: Provide products manufactured by one of the following, or equal.
      a. California Expanded Metal Products Co. (CEMCO)
      b. Clarkwestern Dietrich Building Systems LLC.
      c. Frye Reglet.
      d. Stockton Products.
   3. Products: “Water Management Products” manufactured by California Expanded Metals Co. (CEMCO), or equal.
      a. Foundation Weep Screeds: where indicated, provide “#7 Foundation Sill Screed” with at least a 3-1/2-inch flange and no weep holes.
      b. Extended Weep Screed: “#7 Extended Foundation Screed” one-piece flashing weep screed for applications at decks were flashing is needed to protect waterproof membrane.
      c. Base Flashing: “#17 Base Flashing” one-piece flashing weep screed for applications at decks were flashing is needed to protect waterproof membrane, or equal.
      d. Drip Head: “#6 Drip Head” for application above vents, doors, windows, joints, and as indicated on the Drawing, or equal; water can weep out of the slope leg and solid return leg used for sealant application.

e. Drip Edge: “#12 Soffit Drip Edge” used at soffits and recessed windows; provides drainage and drip edge, or equal.

f. Flashing Screed: “#3 Flashing Screed” one-piece Z-flashing and weep screed combination for application at window head, or equal.

g. Casing Beads: “J-Series Casing Bead” non-perforated casing bead, or equal; used as a stop to terminate plaster edge in a clear straight line at head of plaster or jamb conditions of doors, windows.

h. Expansion Joints: “M-SLIDE EXPANSION JOINT”. 2-piece plaster accessories are prohibited.

i. Horizontal Control Joint: “#15 SOLID LEG Control Joint” one-piece horizontal control joint, or equal.

j. Vertical Control Joints: “#XJ15 Expanded Wing Control Joint (Double J)” used to relieve stresses in large plastered areas of walls, ceilings and plaster areas.

k. Transition Control Joint: Unless otherwise indicated on the Drawings, provide “#9 Transition Control Joint” one-piece drainage accessory for application at substrate transitions between masonry and framed walls, or equal.

l. Control Joints: “#15 Double V Control Joint” used to relieve stresses in large plastered areas of walls, ceilings and plaster areas.

m. Clean-Finish Control Joints: “#XJ15 Expanded Wing Control Joint (Double J)” used to relieve stresses in large plastered areas of walls, ceilings and plaster areas.

n. Cornerbeads: “#2A-Expanded Corner Bead” used for reinforcing exterior corners, or equal.

o. Cornerite: Pre-shaped diamond mesh metal lath formed with minimum 3-inch legs to minimum 105 degrees for a snug fit; used as a reinforcement on inner corners.

p. Strip Lath: Provide welded wire metal lath formed in minimum 4-inch wide strips with smooth outer edges. Used where small strips of lath are required so cutting is limited and around window and door frames as a butterfly reinforcement.

4. Requisite Properties:

   a. Size: Trim and accessories depths must match the thicknesses and number of plaster coats required.

5. Material: Zinc Coated (HDG) Steel Sheet conforming to ASTM A 653, CS Type B (commercial steel), with equal coating weight on each surface.

   a. Coating Designation: Provide at least a G90 (galvanized) minimum coating designation.

   b. Surface Finish: Provide regular spangle surface finish.

   c. Surface Treatment: Provide oiled surface treatment (needed for enhanced formability).

2.02 CEMENTITIOUS SCRATCH AND BROWN COATS

A. Description: Pre-blended mixture conforming to ASTM C926, including cement, reinforcement fibers, hydrated lime, and proprietary ingredients for scratch and brown coats.

B. Manufacturers: Provide products manufactured by one of the following, or equal.
   1. Omega Stucco.
   2. Parex USA, Inc.

C. Product: “Parex Fiber-47 Armourwall 300 Scratch and Brown Sanded or Concentrate” manufactured by Parex USA, Inc., or equal.

D. Components:
   1. Cement: Portland cement conforming to ASTM C 150 Type I.
   2. Fine Aggregate: Dense graded (well-graded) air dry natural sands conforming to ASTM C 897 requirements for gradation, deleterious substances and organic impurities.
   3. Hydrated Lime: ASTM C 206, Type S (special finishing hydrated lime).
   4. Fiber Reinforcement: Nylon or polypropylene monofilament fibers conforming to ASTM C 1116 Type III (synthetic fiber-reinforced concrete or shotcrete). AR chopped glass fiber strands are prohibited.

E. Accessories:
   1. Admix and Bonding Agent: “Adacryl” 100-percent acrylic emulsion additive for Portland cement-based products manufactured by Parex USA, Inc., or equal
   2. Mix Water: Provide fresh, clean, clear, potable water from a domestic source. Water must conform to ASTM C 1602 and be free of oil, grease, waxy films, curing compounds, release agents, and other deleterious materials, including salts, acids, alkalis, organic materials, detergents, and other matter that might negatively affect plaster quality, durability, appearance, or performance.

2.03 ACRYLIC PLASTER FINISH

A. Manufacturers: Provide plaster products manufactured by one of the following, or equal.
   1. Dryvit Systems, Inc.
   2. Parex USA, Inc.
   3. Sto Corp.

B. Reinforced Acrylic Leveling Coat:
   1. Description: 100-percent, acrylic polymer based, reinforced leveling coat used for enhanced crack resistance and embedding reinforcing mesh.
   2. Product: “Parex 121 Base Coat & Adhesive” manufactured by Parex USA, Inc., or equal.

C. Reinforcing Mesh:
   1. Description: Symmetrical, interlaced open-weave alkali-resistant glass fiber fabric made with minimum 20 percent by weight alkaline resistant coating for compatibility with finish materials.
   2. Products: Provide the following manufactured by Parex USA, Inc., or equal.

      a. Standard Mesh: “355 Standard Mesh” 4.5 ounce per square yard fiberglass mesh, or equal.

      b. Detail Mesh: “356 Short Detail Mesh” 4.5 ounce per square yard fiberglass mesh, or equal.

      c. Corner Mesh: “357 Corner Mesh” 7.2 ounce per square yard fiberglass mesh, or equal.

      d. Intermediate Impact Mesh: “358.10 Intermediate Impact Mesh” 12 ounce per square yard fiberglass mesh, or equal.

e. High Impact Mesh: “358.14 High Impact Mesh” 15 ounce per square yard fiberglass mesh, or equal.

f. Ultra High Impact Mesh: “358.20 Ultra High Impact Mesh” 20 ounce per square yard fiberglass mesh, or equal.

g. Reinforced Preformed Mesh: “360 Fast Window Mesh" fiberglass mesh, or equal.

D. Acrylic Primer:
1. Description: Acrylic-based primer designed to reduce the chance of efflorescence and enhance the appearance and uniformity of the finish.
2. Product: “Parex 310 Primer” manufactured by Parex USA, Inc., or equal; tint to match finish coat colors.

E. Acrylic Finish Coat:
1. Description: Factory blended, 100-percent acrylic polymer-based, integral-color plaster finish coat.
2. Products: “DPR Optimum Finish” textured plaster finish manufactured by Parex USA, Inc., or equal.
3. Requisite Properties:

a. Color: Indicated on the Drawings or selected by the Architect.

b. Finish: 533 Sand Smooth.

2.04 ACCESSORIES

A. Bonding Agent:
1. Description: 100-percent acrylic emulsion additive for Portland cement-based products.
2. Product: “Adacryl” manufactured by Parex USA, Inc., or equal.

B. Tie Wire: At least 0.048-inch diameter (ASW 18) soft temper zinc-coated wire conforming to ASTM A 641 Class 3 or A coating.

C. Fasteners for Concrete and CMU: At least 3/4-inch long hardened drive pin power-actuated fasteners (PAF) with 1/2-inch diameter galvanized disc or washer; or 9-gauge, minimum 3/8-inch diameter head, minimum 3/4-inch long concrete nails.

D. Fasteners for Metal Framing: 0.164-inch shank diameter (#8-32 UNC) by at least 1-1/4-inch-long Philips drive socket, bugle or wafer head, self-drilling stainless steel, bi-metal, duplex anti-corrosive steel, 3-coat anti-corrosive steel, or ceramic-coated anti-corrosive steel screw fasteners specified in Section 05 05 23, unless another fastener type is explicitly indicated; or is otherwise supplied, required, recommended, or accepted by the manufacturer.

E. Other Accessories: Provide accessories and secondary items normally furnished or necessary for a complete installation; or supplied, required, recommended, or accepted by the manufacturer for actual in-service conditions applicable to the project.

PART 3 - EXECUTION

3.01 INSTALLATION REQUIREMENTS

A. General:

1. Ensure proper supervision practices are followed at the project site before the installer begins work and at all times during installation.
2. Verify in-place supporting and adjacent construction conforms to the manufacturer's requirements or recommendations, and satisfies all other conditions that might affect the quality of installation or the durability, appearance, or performance of installed plaster and adjacent items.
3. Securely attach plaster trim and lath in place to supporting construction in conformance with ASTM C1063 and ASTM C926.
4. Install plaster in conformance with ASTM C 926 and ASTM C 1063 using materials and methods required, recommended, or accepted by the manufacturer, along with manufacturer-recommended accessories and techniques.
5. Completed work must match approved samples and mockups, as accepted by the Architect.
6. Installed plaster must be warrantable. Do not install, correct, or replace plaster in a manner that results in any warranty or guarantee becoming void.

B. Special Techniques:
1. Provide sufficient manpower and equipment to ensure a continuous operation free of cold joints, scaffold lines, texture variations, and other objectionable conditions.
    a. Once application of any coat has begun, plaster surfaces full height and width between control joints in one operation.
    b. Stop plaster at control joints, edges, or corners.
    c. Apply plaster flush with metal trim members and make corners square and true.
2. Finish plaster in a true, plumb or level plane flush with grounds.
3. Finish plaster flush with metal frames and other built-in metal items or accessories that act as a plaster ground unless otherwise indicated.
    a. Where casing bead does not terminate plaster at metal frame, cut base coat free from metal frame before plaster sets and groove finish coat at junctures with metal.
    b. Apply sealant in groove to metal frame.
4. Shield completed scratch, brown and finish coat applications from direct sunlight and wind exposure (i.e., provide dark colored coverings or barriers).
5. Curing and protection measures must prevent drying, uneven or excessive evaporation, and strong natural or artificial blasts of dry air during the curing period.

C. Correction and Repair:
1. Correct deficiencies that do not conform to the Contract Documents.
2. Repair non-conforming, damaged and defective work.
3. Repair damaged finishes. Restore finishes so that no evidence remains of corrective work.

D. Protection:
1. Protect installed plaster in place from soiling, deterioration, and damage until Substantial Completion.
2. Remove protection when it's no longer needed and before Substantial Completion.

END OF SECTION

©AWCWEST 18E22 All rights reserved.
RSTLNE, TAGDSC, ELMTB, CLSB2010, CLSB3080, CLSB3090

SECTION 09 25 14
ACRYLIC PLASTER FINISH

PART 1 - GENERAL

1.01 SUMMARY

A. Section Includes:
   1. Acrylic plaster finish.
   2. Supplementary components and accessories normally furnished or necessary for a complete installation, whether or not such items are indicated on the Drawings or included in the Specifications.

B. Related Requirements:
   1. Section 09 22 38 for lath, trim, and cementitious scratch and brown coats.

1.02 REFERENCES

A. Definitions:
   1. Manufacturer: Means the acrylic plaster finish manufacturer, unless otherwise indicated.

1.03 ADMINISTRATIVE REQUIREMENTS

A. Coordination:
   1. Proposed substitution requests and submittals that change the quality (grade) or generic chemistry of specified finishes are prohibited and returned to the Contractor without review or responsive action, except to record non-conformance with this requirement.
   2. Specified coverage rates and thicknesses are minimum. If manufacturer's recommended coverage rates differ from specified rates, then

      a. consult the manufacturer's representative and obtain manufacturer-recommended coverage rates printed on manufacturer's letterhead;

      b. assume the manufacturer-recommended coverage rates govern; and

      c. promptly submit an RFI to the Architect for resolution; include manufacturer-recommended coverage rates with the RFI.

B. Sequencing:
   1. Schedule acrylic plaster finish deliveries to the project site only after the building is enclosed with a permanent enclosure; "wet work" within storage areas (including concrete, cast underlayment, mortaring, grouting, plastering, and gypsum board finishing) is complete and cured or dried to a condition of equilibrium; and storage areas are broom- and vacuum-clean.
   2. Install acrylic plaster finishes only after penetrating items are installed and after overhead finishing operations are complete,

C. Preinstallation Meeting:
   1. Hold a meeting after submittal approval and at least 10 business days before beginning installation.

2. During the meeting, review the Contract Documents, submittals, project conditions, and installation sequence and methods, including special details and conditions that might affect installation
3. Identify and discuss adverse or unfavorable conditions detrimental to protecting stored materials or to installation; or to the quality, durability, appearance, or performance of installed plaster finishes. Resolve each condition.
4. Finalize construction schedule.
5. Record significant discussions and distribute meeting minutes. Do not begin installation until disagreements are successfully resolved to the satisfaction of all parties.

1.04 SUBMITTALS

A. Action Submittals: Submit the following for responsive action (formal review and approval).
   1. Product Data:

      a. Submit manufacturer's product data, specifications, typical installation details, and all other information necessary to show conformance to the Contract Documents, excluding material safety data sheets (MSDSs), which are returned to the Contractor without review or responsive action.

      b. Submit sample warranties with warranty periods, terms, conditions, exclusions, and remedies explicitly defined for each warranty, including clear warranty period start dates. (e.g., date of manufacture, purchase, installation, Beneficial Occupancy, Substantial Completion, Final Completion, etc.)
   2. Shop Drawings: Include project-specific dimensioned details drawn to scale showing conditions not detailed on the product data; or that are detailed, but not in a manner specific to the project.
   3. Samples: Submit at least 8-inch square representative color samples of each acrylic plaster finish type, color, finish with typical trim and joints intersecting at the center of each sample. Stepped samples must include each coat or layer, including leveling coat, reinforcing mesh, primer, and finish coat separately identified by manufacturer's name and product name or stock number.

B. Informational Submittals: Submit the following for information (informal review: responsive action not expected or required, except to record non-conformance with submittal requirements).
   1. Manufacturer's Instructions: Submit manufacturer-prepared published instructions for proper installation of furnished plaster finishes.

      a. If manufacturer's instructions are unavailable or do not apply to specific project conditions, then consult the manufacturer's representative and obtain project-specific supplemental instructions printed on manufacturer's letterhead.

      b. Promptly distribute supplemental instructions to the Architect, who may have comments that lead to contract modifications or minor changes in the work.
   2. Qualification Statements: Submit written descriptions confirming experience specified in QUALITY ASSURANCE article below.

C. Closeout Submittals: Submit the following to the Architect as a condition of project closeout.
   1. Warranty Documentation: Submit final warranties signed by the manufacturer's representative with complete terms indicated for all warranties covering items furnished or installed under this specification section.

1.05 QUALITY ASSURANCE

A. Source Limitations:
   1. Acrylic plaster finishes must be obtained through one source from the same manufacturer (to ensure compatibility, regulatory conformance, and a warrantable installation).
      a. Certain items may be obtained from more than one manufacturer, but only when used for separate installations.
      b. Items provided for each different installation must be obtained from the same source and manufacturer.
   2. Provide secondary materials, components, accessories and other items from sources required, recommended, or accepted by the primary manufacturer for actual in-service conditions applicable to the project.

B. Qualifications:
   1. Installer: Company or individuals must have at least 5 years' experience installing acrylic plaster finishes for at least 30 previous projects similar to this project in size, material, design, and complexity.
   2. Supervisors: Individuals must have at least 7 years' experience installing acrylic plaster finishes for at least 30 previous projects similar to this project in size, material, design, and complexity, including at least 2 years' supervisory experience directing and leading acrylic plaster finish installers.

C. Mockups: If an *ex-situ* exterior wall integrated mockup is required for this project, then integrate acrylic plaster finishes into the mockup as part of the work of this specification section.

1.06 HANDLING

A. Receiving: Inspect all deliveries for deteriorated, damaged, and defective items.
   1. Reject items that are not packaged in a manner that prevents damage; or that exhibit deterioration or damage or have damaged or open packaging or containers.
   2. Unload and store only inspected and accepted items.

B. Storage: Store unloaded items as shipped and in conformance with manufacturer's instructions and other requirements and recommendations for storage. Furnish adequate dunnage during storage.
   1. Prevent stored items from contacting the floor or ground and from deterioration and damage.
   2. If items are not stored in an enclosed location, then cover the tops and sides with securely-tied, waterproof, and breathable covers. Unvented polyethylene tarpaulins do not qualify as breathable covers and are prohibited. (due to potential accumulation of moisture beneath tarpaulin during certain environmental conditions)
   3. Incline covered items to ensure maximum drainage of accumulated moisture.
   4. Do not leave items uncovered where they might be exposed to weather or become wet from rain, mist, relative humidity, condensation, frost, and other sources of moisture; or exposed to other sources of deterioration and damage, including heat and sudden changes in temperature, and UV exposure beyond manufacturer-recommended limits.

C. Handling: Handle items in conformance with manufacturer's instructions and other requirements and recommendations, and in a manner that that prevents damage.
   1. Avoid damage to packaging and containers, and contamination of contents.
   2. Rotate inventory; do not use items the shelf life of which is expired.

D. Damaged Item Replacement: Promptly remove and replace deteriorated, damaged, or defective acrylic plaster finishing materials with undamaged new acrylic plaster finishing materials that do not exhibit deterioration, damage, or defects.

E. Packaging Waste Management: Do not burn or bury construction waste at the project site. Remove and legally dispose of all construction waste away from the project site.

1.07 PROJECT CONDITIONS

A. Ambient Conditions: Install acrylic plaster finishes only when ambient temperature, RH, and other environmental conditions fall within ranges required, recommended, or accepted by the manufacturer.

B. Other Conditions:
   1. Substrate Tolerance: Surfaces receiving acrylic plaster finishes must be flat with 1/4-inch within any 10-foot radius.
   2. Deflection: Maximum of substrate deflection under positive or negative design loads must not exceed L/360 of span.

1.08 WARRANTY

A. Manufacturer Warranty: Furnish to the Owner a written manufacturer warranty for products, components, and accessories against all patent and latent defects, and incipient and catastrophic failure for 5 years.

B. Installer Guarantee: Furnish to the Owner a written guarantee for the work of this specification section against all defects in materials and workmanship for 2 years from date of acceptance. Guarantees must be properly prepared and signed on the guarantee form in Division 01.

PART 2 - PRODUCTS

2.01 ACRYLIC PLASTER FINISH

A. Manufacturers: Provide products manufactured by one of the following, or equal.
   1. Dryvit Systems, Inc.
   2. Parex USA, Inc.
   3. Sto Corp.

B. Reinforced Acrylic Leveling Coat:
   1. Description: 100-percent, acrylic polymer based, reinforced leveling coat used for enhanced crack resistance and embedding reinforcing mesh.
   2. Product: “Parex 121 Base Coat & Adhesive” manufactured by Parex USA, Inc., or equal.

C. Reinforcing Mesh:
   1. Description: Symmetrical, interlaced open-weave alkali-resistant glass fiber fabric made with minimum 20 percent by weight alkaline resistant coating for compatibility with finish materials.
   2. Products: Provide the following manufactured by Parex USA, Inc., or equal.

      a. Standard Mesh: “355 Standard Mesh”, or equal, 4.5 ounce per square yard fiberglass mesh.

b. Detail Mesh: “356 Short Detail Mesh”, or equal, 4.5 ounce per square yard fiberglass mesh.

c. Corner Mesh: “357 Corner Mesh”, or equal, 7.2 ounce per square yard fiberglass mesh.

d. Intermediate Impact Mesh: “358.10 Intermediate Impact Mesh”, or equal, 12 ounce per square yard fiberglass mesh.

e. High Impact Mesh: “358.14 High Impact Mesh”, or equal, 15 ounce per square yard fiberglass mesh.

f. Ultra-High Impact Mesh: “358.20 Ultra High Impact Mesh”, or equal, 20 ounce per square yard fiberglass mesh.

g. Reinforced Preformed Mesh: “360 Fast Window Mesh” fiberglass mesh, or equal.

D. Acrylic Primer:
1. Description: Acrylic-based primer designed to reduce the chance of efflorescence and enhance finish appearance and uniformity.
2. Product: “Parex 310 Primer” manufactured by Parex USA, Inc., or equal; tint to match finish coat colors.

E. Acrylic Finish Coat:
1. Description: Factory blended, 100-percent acrylic polymer-based, integral-color plaster finish coat.
2. Product: “DPR Optimum Finish” manufactured by Parex USA, Inc., or equal.
3. Requisite Properties:

a. Color: Indicated on the Drawings or selected by the Architect.

b. Finish: 533 Sand Smooth.

2.02 ACCESSORIES

A. Bonding Agent:
1. Description: 100-percent acrylic emulsion additive for Portland cement-based products.
2. Product: “Adacryl” manufactured by Parex USA, Inc., or equal.

B. Other Accessories: Provide accessories and secondary items normally furnished or necessary for a complete installation; or supplied, required, recommended, or accepted by the manufacturer for actual in-service conditions applicable to the project.

2.03 MIXING

A. Factory-Mixed Products:
1. Open acrylic plaster finish packaging and containers only as required for use and mix only in designated areas.
2. Thoroughly agitate and stir acrylic plaster finish materials to a uniform and smooth consistency suitable for proper installation.
3. Do not reduce, alter, or introduce foreign materials into acrylic plaster finish materials, except in conformance with manufacturer’s instructions and other requirements and recommendations.

B. Site Mixing: Batch mix acrylic plaster finish materials in conformance with manufacturer's instructions and other requirements and recommendations, using manufacturer-recommended techniques and manufacturer-recommended mechanical mixing equipment, which must be clean and free of material from previously mixed batches before charging each subsequent batch.
   1. Measure mix materials using only graduated mixing containers and calibrated mixing equipment. Shovels do not qualify as graduated mixing containers or calibrated equipment, and are prohibited from measuring or dispensing mix materials.
   2. Thoroughly agitate and stir mix materials to a uniform and smooth consistency suitable for proper installation.
   3. Do not reduce, alter, or introduce foreign materials into mix materials, except in conformance with manufacturer's instructions and other requirements and recommendations.
   4. Do not use caked or lumpy materials; or materials that are irregular, too thick or too thin, or that are partially set.

PART 3 - EXECUTION

3.01 EXAMINATION

A. Oversight: Ensure an adequate number of supervisors are present and proper supervision practices are followed at the project site before the installer begins work and at all times during installation.

B. Verification:
   1. Verify in-place supporting and adjacent construction conforms to the manufacturer's requirements or recommendations and satisfies all other conditions that might affect the quality of installation or the durability, appearance, or performance of installed and adjacent items.
   2. Verify substrates are free of deleterious and other substances that might interfere with acrylic plaster finish adhesion, appearance, or performance.
   3. Verify items penetrating acrylic plaster finishes are installed.

C. Evaluation and Assessment:
   1. Identify project conditions that do not conform to the manufacturer's instructions and other requirements and recommendations.
   2. Perform or arrange and pay costs without reimbursement from Owner for all remedial work necessary to correct or improve deficient conditions, without limitation, before the installer begins work.

3.02 PREPARATION

A. Protection:
   1. Work Area Protection: Protect work areas from dust and other airborne contaminants during surface preparation and acrylic plaster finish installation.
   2. Adjacent Material Protection: Protect adjacent surfaces against soiling and damage. Utilize drop cloths, shields, masking, barricades, and other items necessary to protect adjacent surfaces.
   3. Opening Protection: Close and protect drains and other openings and penetrations to prevent intrusion or migration of liquids.

B. Substrate Preparation: Prepare substrates as required, recommended, or accepted by the manufacturer without limitation; and in a manner that does not result in any specified or other warranty or guarantee becoming void.

3.03 INSTALLATION

A. General Requirements:

1. Install acrylic plaster finishes using materials and methods required, recommended, or accepted by the manufacturer, along with manufacturer-recommended accessories and techniques.
2. Only install acrylic plaster finish under conditions that ensure finishes are free from blemishes and defects.
3. Provide smooth surfaces of uniform finish, color, appearance, and coverage. Acrylic plaster finish surfaces with soft spots, holidays, streaks, or other imperfections are prohibited and are rejected as non-conforming work.
4. Do not exceed the application rates recommended by the manufacturer.
5. Completed work must match approved samples and mockups, as accepted by the Architect.
6. Installed acrylic plaster finishes must be warrantable. Do not install, correct, or replace acrylic plaster finishes in a manner that results in any warranty or guarantee becoming void.

B. Special Techniques:

1. Apply finish coat not less than 7 days after brown coat is applied. Dampen brown coat thoroughly and apply finish coat to a uniform minimum thickness of 1/8-inch to match approved mockup. Correct irregularities prior to application.
2. Provide sufficient manpower and equipment to ensure a continuous operation free of cold joints, scaffold lines, texture variations, and other objectionable conditions.

    a. Plaster surfaces full height and width between control joints in one operation once the application of any coat has begun.

    b. Stop acrylic plaster finishes at control joints, edges, or corners only.

    c. Apply acrylic plaster finishes flush with metal trim members and make corners square and true.
3. Finish plaster in a true, plumb or level plane flush with grounds.
4. Finish plaster flush with metal frames and other built-in metal items or accessories that act as a plaster ground unless otherwise indicated. Where casing bead does not terminate acrylic plaster finish at metal frame, cut base coat free from metal frame before acrylic plaster finish sets and groove finish coat at junctures with metal. Apply sealant in groove to metal frame.
5. Protection Measures during Application and Cure:

    a. Protect acrylic plaster finishes in conformance with manufacturer’s instructions.

    b. Protection measures must shield the completed finish coat from direct sunlight and wind exposure (i.e., provide dark colored coverings or barriers).

    c. The combination of curing and protection measures that are employed must prevent drying, uneven or excessive evaporation, and strong natural or artificial blasts of dry air during the curing period.

3.04 CORRECTION AND REPAIR

A. Non-conforming, damaged, and defective work must be brought into conformance with the Contract Documents. Correct and repair as necessary, without limitation, including arranging all correction and repair work and paying all correction and repair costs, until accepted in writing by the Architect.

B. Corrective and repair work must be performed in conformance with a correction and repair plan submitted to and accepted in writing by the Architect before correction or repair work begins. At a minimum, correction and repair plans must include
   1. written descriptions of non-conforming, damaged, and defective work;
   2. supporting sketches, diagrams, photographs, and other visual depictions of non-conforming, damaged, and defective work; and
   3. similar written descriptions and visual depictions of Contractor-proposed corrections and repairs.

C. Arrange and pay costs without reimbursement from Owner for removing and replacing work that cannot be corrected or repaired to the Architect's acceptance.

3.05 CLEANING

A. Cleaning Work: Clean spills, stains, soiling, overspray, and fallout from adjacent surfaces.
   1. Use cleaning materials, equipment, and accessories supplied, and means, methods, techniques, and procedures required, recommended, or accepted by the manufacturer.
   2. Do not use cleaning materials or procedures known to change, or that might change, the appearance of exposed finishes or adjacent surfaces; or cause deterioration or damage to exposed finishes or adjacent surfaces.
   3. Protect adjacent surfaces not being cleaned from staining, deterioration, damage, or other detrimental effects caused by cleaning.
   4. Arrange and pay costs without reimbursement from Owner for removing and replacing work that cannot be cleaned to the Architect's acceptance.

B. Waste Management: After completing the work of this specification section, leave work areas free from debris, waste, scrap, equipment, tools, and other items.

3.06 PROTECTION

A. Protect installed acrylic plaster finishes in place from soiling, deterioration, and damage until Substantial Completion.

B. Do not store anything adjacent to or against installed acrylic plaster finishes unless they are protected from damage, as accepted in writing by the manufacturer's representative. Do not use installed acrylic plaster finishes as work surfaces.

C. Remove protection when it's no longer needed and before Substantial Completion.

END OF SECTION

©AWCWEST 18E22 All rights reserved.
RSTLNE, TAGDSC, ELMTB, CLSB2010, CLSB3080, CLSB3090

SECTION 09 25 16
INTERIOR PLASTER FINISH

PART 1 - GENERAL

1.1 SUMMARY

A. Section Includes:
   1. Plaster finish for interior surfaces exposed to high moisture.
   2. Supplementary components and accessories normally furnished or necessary for a complete installation, whether or not such items are indicated on the Drawings or included in the Specifications.

B. Related Requirements:
   1. Section 09 22 38 for plastic lath, plastic trim, and cementitious scratch and brown coats.

1.2 REFERENCES

A. Definitions:
   1. Manufacturer: Means the plaster finish manufacturer, unless otherwise indicated.

1.3 ADMINISTRATIVE REQUIREMENTS

A. Coordination:
   1. Proposed substitution requests and submittals that change the quality (grade) or generic chemistry of specified finishes are prohibited and returned to the Contractor without review or responsive action, except to record non-conformance with this requirement.
   2. Specified coverage rates and thicknesses are minimum. If manufacturer's recommended coverage rates differ from specified rates, then
      a. consult the manufacturer's representative and obtain manufacturer-recommended coverage rates printed on manufacturer's letterhead;
      b. assume the manufacturer-recommended coverage rates govern; and
      c. promptly submit an RFI to the Architect for resolution; include manufacturer-recommended coverage rates with the RFI.

B. Sequencing:
   1. Schedule plaster finish deliveries to the project site only after the building is enclosed with a permanent enclosure; "wet work" within storage areas (including concrete, cast underlayment, mortaring, grouting, plastering, and gypsum board finishing) is complete and cured or dried to a condition of equilibrium; and storage areas are broom- and vacuum-clean.
   2. Before beginning installation, final light fixtures must be completely installed, energized, and fully illuminated to at least the same type and level of illumination, and color temperature, maintained in the room or space after the building is occupied.
   3. Install plaster finishes only after penetrating items are installed and after overhead finishing operations are complete,

1.4 SUBMITTALS

A. Action Submittals: Submit the following for responsive action (formal review and approval).

1. Product Data: Submit manufacturer's product data, specifications, and all other information necessary to show conformance to the Contract Documents, excluding material safety data sheets (MSDSs), which are returned to the Contractor without review or responsive action.
2. Shop Drawings: Include project-specific dimensioned details drawn to scale showing conditions not detailed on the product data; or that are detailed, but not in a manner specific to the project.
3. Samples: Submit at least 8-inch square representative color samples of each plaster finish type, color, finish with typical trim and joints intersecting at the center of each sample. Stepped samples must include each coat or layer, including leveling coat, reinforcing mesh, primer, and finish coat separately identified by manufacturer's name and product name or stock number.

B. Informational Submittals: Submit the following for information (informal review: responsive action not expected or required, except to record non-conformance with submittal requirements).
1. Manufacturer's Instructions: Submit manufacturer-prepared published instructions for proper installation of furnished plaster finish.
a. If manufacturer's instructions are unavailable or do not apply to specific project conditions, then consult the manufacturer's representative and obtain project-specific supplemental instructions printed on manufacturer's letterhead.
b. Promptly distribute supplemental instructions to the Architect, who may have comments that lead to contract modifications or minor changes in the work.
2. Qualification Statements: Submit written descriptions confirming experience specified in QUALITY ASSURANCE article below.

1.5 QUALITY ASSURANCE

A. Source Limitations:
1. Plaster finishes must be obtained through one source from the same manufacturer (to ensure compatibility, regulatory conformance, and a warrantable installation).
a. Certain items may be obtained from more than one manufacturer, but only when used for separate installations.
b. Items provided for each different installation must be obtained from the same source and manufacturer.
2. Provide secondary materials, components, accessories and other items from sources required, recommended, or accepted by the primary manufacturer for actual in-service conditions applicable to the project.

B. Qualifications:
1. Installer: Company or individuals must have at least 5 years' experience installing plaster finishes for at least 30 previous projects similar to this project in size, material, design, and complexity.
2. Supervisors: Individuals must have at least 7 years' experience installing plaster finishes for at least 30 previous projects similar to this project in size, material, design, and complexity, including at least 2 years' supervisory experience directing and leading plaster finish installers.

C. Field Samples: Include *in-situ* mockups as part of the work of this specification section.
1. The Architect reviews field samples for conformance to the Contract Documents and approves or rejects them as the standard by which subsequent work is evaluated.
2. Revise field samples and repeat reviews, including arranging all revisions and paying all revision costs, until accepted in writing by the Architect. Final acceptance of stone wall facings is made from field samples.
3. After acceptance, promptly identify and protect field samples for reference until Substantial Completion.
4. Approved field samples may remain part of the work after being identified for future reference.

1.6 HANDLING

A. Receiving: Inspect all deliveries for deteriorated, damaged, and defective items.
   1. Reject items that are not packaged in a manner that prevents damage; or that exhibit deterioration or damage or have damaged or open packaging or containers.
   2. Reject items that are not transported, delivered, or protected in conformance with manufacturer-recommended transport, delivery, and receiving requirements.
   3. Unload and store only inspected and accepted items.

B. Storage: Store unloaded items indoors as shipped, upright in their original packaging or containers, within dry, well-ventilated, broom-cleaned and enclosed storage areas.
   1. Furnish adequate dunnage and bracing during storage.
   2. Prevent stored items from contacting the floor and from deterioration and damage.
   3. Do not leave items uncovered where they might be exposed to weather or become wet; or exposed to heat or sudden changes in temperature or relative humidity; or other sources of deterioration and damage, including dust and other airborne contaminants.

C. Handling: Handle items in conformance with manufacturer's instructions and other requirements and recommendations, and in a manner that that prevents damage.
   1. Avoid damage to packaging and containers, and contamination of contents.
   2. Rotate inventory; do not use items the shelf life of which is expired.

D. Damaged Item Replacement: Promptly remove and replace deteriorated, damaged, or defective plaster finishing materials with undamaged new plaster finishing materials that do not exhibit deterioration, damage, or defects.

E. Packaging Waste Management: Do not burn or bury construction waste at the project site. Remove and legally dispose of all construction waste away from the project site.

1.7 PROJECT CONDITIONS

A. Ambient Conditions: Install plaster finishes only when ambient temperature, RH, and other environmental conditions fall within ranges required, recommended, or accepted by the manufacturer.

B. Other Conditions:
   1. Substrate Tolerance: Surfaces receiving acrylic plaster finishes must be flat with 1/4-inch within any 10-foot radius.
   2. Deflection: Maximum of substrate deflection under positive or negative design loads must not exceed L/360 of span.

PART 2 - PRODUCTS

2.1 MANUFACTURERS

A. Manufacturers: Provide products manufactured by one of the following, or equal.
   1. Merlex Stucco, Inc.
   2. Sika Corp.

2.2 INTERIOR PLASTER FINISH

A. Description: Spray- or trowel-applied polymer-modified Portland cement based plaster finish for interior surfaces exposed to high moisture.

B. Products: “Super Shower Finish” manufactured by Merlex Stucco, Inc., or equal.

C. Requisite Properties:
   1. Plaster Thickness: 1⁄8-inch nominal dry thickness.
   2. Surface Finish: Smooth finish for field-applied painting.

2.3 ACCESSORIES

A. Sealant: “Mer Seal II” manufactured by Merlex Stucco, Inc., or equal.

B. Mix Water: Provide fresh, clean, clear, potable water from a domestic source. Water must conform to ASTM C 1602 and be free of oil, grease, waxy films, curing compounds, release agents, and other deleterious materials, including salts, acids, alkalis, organic materials, detergents, and other matter that might negatively affect plaster quality, durability, appearance, or performance.

C. Other Accessories: Provide accessories and secondary items normally furnished or necessary for a complete installation; or supplied, required, recommended, or accepted by the manufacturer for actual in-service conditions applicable to the project.

2.4 MIXING

A. Factory-Mixed Products:
   1. Open plaster finish containers only as required for use and mix only in designated areas.
   2. Thoroughly agitate and stir plaster finish materials to a uniform and smooth consistency suitable for proper installation.
   3. Do not reduce, alter, or introduce foreign materials into plaster finish materials, except in conformance with manufacturer’s instructions and other requirements and recommendations.

B. Site Mixing: Batch mix acrylic plaster finish materials in conformance with manufacturer’s instructions and other requirements and recommendations, using manufacturer-recommended techniques and manufacturer-recommended mechanical mixing equipment, which must be clean and free of material from previously mixed batches before charging each subsequent batch.
   1. Measure mix materials using only graduated mixing containers and calibrated mixing equipment. Shovels do not qualify as graduated mixing containers or calibrated equipment, and are prohibited from measuring or dispensing mix materials.
   2. Thoroughly agitate and stir mix materials to a uniform and smooth consistency suitable for proper installation.
   3. Do not reduce, alter, or introduce foreign materials into mix materials, except in conformance with manufacturer’s instructions and other requirements and recommendations.
   4. Do not use caked or lumpy materials; or materials that are irregular, too thick or too thin, or that are partially set.

PART 3 - EXECUTION

3.1 EXAMINATION

A. Oversight: Ensure an adequate number of supervisors are present and proper supervision practices are followed at the project site before the installer begins work and at all times during installation.

B. Verification:
   1. Verify in-place construction, project conditions, and the work of other specification sections conform to the manufacturer's instructions and other requirements and recommendations.
   2. Verify substrates are free of deleterious and other substances that might interfere with plaster finish adhesion, appearance, or performance.
   3. Verify items penetrating acrylic plaster finishes are installed.

C. Evaluation and Assessment:
   1. Identify project conditions that do not conform to the manufacturer's instructions and other requirements and recommendations.
   2. Perform or arrange and pay costs without reimbursement from Owner for all remedial work necessary to correct or improve deficient conditions, without limitation, before the installer begins work.

3.2 PREPARATION

A. Protection:
   1. Work Area Protection: Protect work areas from dust and other airborne contaminants during surface preparation and plaster finish installation.
   2. Adjacent Material Protection: Protect adjacent surfaces against soiling and damage. Utilize drop cloths, shields, masking, barricades, and other items necessary to protect adjacent surfaces.
   3. Opening Protection: Close and protect drains and other openings and penetrations to prevent plaster finish intrusion or migration of liquids.

B. Substrate Preparation: Prepare substrates as required, recommended, or accepted by the manufacturer without limitation; and in a manner that does not result in any warranty or guarantee becoming void.

3.3 INSTALLATION

A. General Requirements:
   1. Install plaster finish using materials and methods required, recommended, or accepted by the manufacturer, along with manufacturer-recommended accessories and techniques.
   2. Only install plaster finish under conditions that ensure finishes are free from blemishes and defects.
   3. Provide smooth surfaces of uniform finish, color, appearance, and coverage. Plaster finish surfaces with soft spots, holidays, streaks, or other imperfections are prohibited and are rejected as non-conforming work.
   4. Do not exceed the application rates recommended by the manufacturer.
   5. Completed work must match approved samples and mockups, as accepted by the Architect.
   6. Installed plaster finishes must be warrantable. Do not install, correct, or replace plaster finishes in a manner that results in any warranty or guarantee becoming void.

3.4 CORRECTION AND REPAIR

A. Non-conforming, damaged, and defective work must be brought into conformance with the Contract Documents. Correct and repair as necessary, without limitation, including arranging all correction and repair work and paying all correction and repair costs, until accepted in writing by the Architect.

B. Corrective and repair work must be performed in conformance with a correction and repair plan submitted to and accepted in writing by the Architect before correction or repair work begins. At a minimum, correction and repair plans must include
   1. written descriptions of non-conforming, damaged, and defective work;
   2. supporting sketches, diagrams, photographs, and other visual depictions of non-conforming, damaged, and defective work; and
   3. similar written descriptions and visual depictions of Contractor-proposed corrections and repairs.

C. Arrange and pay costs without reimbursement from Owner for removing and replacing work that cannot be corrected or repaired to the Architect's acceptance.

3.5 CLEANING

A. Cleaning Work: Clean spills, stains, soiling, overspray, and fallout from adjacent surfaces.
   1. Use cleaning materials, equipment, and accessories supplied, and means, methods, techniques, and procedures required, recommended, or accepted by the manufacturer.
   2. Do not use cleaning materials or procedures known to change, or that might change, the appearance of exposed finishes or adjacent surfaces; or cause deterioration or damage to exposed finishes or adjacent surfaces.
   3. Protect adjacent surfaces not being cleaned from staining, deterioration, damage, or other detrimental effects caused by cleaning.
   4. Arrange and pay costs without reimbursement from Owner for removing and replacing work that cannot be cleaned to the Architect's acceptance.

B. Waste Management: After completing the work of this specification section, leave work areas free from debris, waste, scrap, equipment, tools, and other items.

3.6 PROTECTION

A. Protect installed plaster finishes in place from soiling, deterioration, and damage until Substantial Completion.

B. Do not store anything adjacent to or against installed plaster finishes unless they are protected from damage, as accepted in writing by the manufacturer's representative. Do not use installed plaster finishes as work surfaces.

C. Remove protection when it's no longer needed and before Substantial Completion.

END OF SECTION

©AWCWEST 18E22 All rights reserved.

SECTION 09 28 14
CEMENTITIOUS TILE BACKING BOARD

PART 1 - GENERAL

1.01 SUMMARY

A. Section Includes:
   1. Glass mesh cement backerboard.
   2. Installation materials.
   3. Joint treatment materials.
   4. Supplementary components and accessories normally furnished or necessary for a complete installation, whether or not such items are indicated on the Drawings or included in the Specifications.

1.02 SECTION REQUIREMENTS

A. Submittals: Submit product data, shop drawings, and written descriptions of specified qualifications.

PART 2 - PRODUCTS

2.01 GLASS MESH CEMENT BACKERBOARD

A. Description: Portland cement-based backerboards conforming to ASTM C 1325 and ANSI A118.9.

B. Products: Provide one of the following, or equal.
   1. “WonderBoard Lite BackerBoard” manufactured by Custom Building Products.
   2. “PermaBase Cement Board” manufactured by National Gypsum Co.
   3. “DUROCK Cement Board Next Gen” manufactured by USG Corp.

C. Requisite Properties:
   1. Minimum Size: Provide at least 4-foot by 8-foot sheets.
   2. Minimum Thickness: 5/8-inch.
   3. Edges: Eased.

2.02 INSTALLATION MATERIALS

A. Moisture Barrier:
   1. Application: Applied directly over stud framing behind backing boards as a base layer moisture barrier.
   2. Products: Provide “Tyvek CommercialWrap” (ICC-ES Report No. ESR-2375) manufactured by E.I. DuPont de Nemours & Company., or equal.
   3. Requisite Properties:

      a. Minimum Basis Weight: At least 2.7 ounces per square yard, when measured in conformance with TAPPI Test Method T 410.

b. Maximum UV Exposure Limit: Cover within 365 calendar days.

2.03 INSTALLATION MATERIALS

A. Fasteners: Provide 0.164-inch shank diameter (#8-32 UNC) by at least 1-1/4-inch-long Philips drive socket, bugle or wafer head, self-drilling stainless steel, bi-metal, duplex anti-corrosive steel, 3-coat anti-corrosive steel, or ceramic-coated anti-corrosive steel screw fasteners, with Hi-Lo threads, unless another fastener type is explicitly indicated; or is otherwise supplied, required, recommended, or accepted by the manufacturer.

2.04 JOINT TREATMENT MATERIALS

A. Glass Mesh Tape:
   1. Description: 2-inch wide, alkali-resistant, polymer-coated, 10x10 glass-fiber mesh tape.
   2. Application: Used in combination with joint sealant as a panel joint and penetration treatment for long-term joint protection.
   3. Product: As supplied, required, recommended, or accepted by the manufacturer.

B. Glass Mesh Tape:
   1. Description: 2-inch wide, alkali-resistant, polymer-coated, 10x10 glass-fiber mesh tape.
   2. Application: Used in combination with joint sealant as a panel joint and penetration treatment for long-term joint protection.
   3. Product: Supplied, required, recommended, or accepted by the manufacturer.

C. Polymer-Modified Cementitious Mortar:
   1. Description: Premium-grade (best quality grade), single-component, ultra-high-performance, polymer-modified Portland cement mortar conforming to A118.15 shear bond strength requirements.
   2. Application: Used for embedding joint tape and finishing backing board in wet locations (e.g., toilet rooms, shower rooms, saunas, steam rooms, kitchens, swimming pool enclosures, etc.). Do not use drying-type joint compound, setting-type joint compound, or paper tape in wet locations.
   3. Products: Provide one of the following, or equal.
      a. “MegaFlex Crack Prevention Mortar” manufactured by Custom Building Products.
      b. “254 Platinum” manufactured by LATICRETE International, Inc.
      c. “Ultraflex 3” manufactured by Mapei Corp.

D. Setting-Type Joint Compound:
   1. Description: Lightweight, sandable, chemically setting powder compound conforming to ASTM C 475 and used for embedding joint tape and finishing backing board. All-purpose and drying type joint compounds are prohibited.
   2. Product: Provide “SHEETROCK DURABOND” and “SHEETROCK Easy Sand” manufactured by USG Corp., or equal.

2.05 ACCESSORIES

A. Sealant: Provide fluid-applied low modulus joint sealant specified in Section 07 92 00, unless another type of sealant or liquid flashing is explicitly indicated; or supplied, required,

recommended, or accepted by the manufacturer to seal sheathing joints and fastener penetrations.

B. Other Accessories: Provide accessories and secondary items normally furnished or necessary for a complete installation; or supplied, required, recommended, or accepted by the manufacturer for actual in-service conditions applicable to the project.

PART 3 - EXECUTION

3.01 INSTALLATION REQUIREMENTS

A. General:
   1. Ensure proper supervision practices are followed at the project site before the installer begins work and at all times during installation.
   2. Verify in-place supporting and adjacent construction conforms to the manufacturer's requirements or recommendations and satisfies all other conditions that might affect the quality of installation or the durability, appearance, or performance of installed backing boards and adjacent items.
   3. Install backing boards using materials and methods required, recommended, or accepted by the manufacturer, along with manufacturer-recommended accessories and techniques.
   4. Set items true to line, to required levels and lines, and plumb, level, and square, without warp or rack, with flush well-fitted joints, and in alignment with adjacent construction
   5. Securely attach backing boards in place to supporting construction.
   6. Installed backing boards must be warrantable. Do not install, correct, or replace backing boards in a manner that results in any warranty or guarantee becoming void.

B. Installation Tolerances: Install backing boards to an allowable tolerance variation of not more than 1/4-inch from true position and not more than 1/8-inch and from plumb, level, and alignment.

C. Correction and Repair:
   1. Correct deficiencies that do not conform to the Contract Documents.
   2. Repair non-conforming, damaged and defective work.
   3. Replace soiled items that cannot be cleaned to the same condition as new.

END OF SECTION

©AWCWEST 18E22 All rights reserved.
RSTLNE. TAGDSC, ELMTC, CLSC1010

SECTION 09 29 00
GYPSUM BOARD

PART 1 - GENERAL

1.01 SUMMARY

A. Section Includes:
   1. Gypsum board.
   2. Metal trim.
   3. Installation materials.
   4. Joint treatment materials.
   5. Supplementary components and accessories normally furnished or necessary for a complete installation, whether or not such items are indicated on the Drawings or included in the Specifications.

B. Related Requirements:
   1. Section 07 54 19 for GMF roof cover boards.

1.02 SECTION REQUIREMENTS

A. Submittals: Submit product data, shop drawings, and written descriptions of specified qualifications.

PART 2 - PRODUCTS

2.01 MANUFACTURERS

A. Manufacturer: Provide products manufactured by one of the following, or equal.
   1. CertainTeed Corp.
   2. GP Building Products.
   3. National Gypsum Co.
   4. USG Corp.

2.02 FIRE-RESISTANCE RATED GYPSUM BOARD

A. Fire-Resistance-Rated Gypsum Wall and Ceiling Board:
   1. Description: Gypsum board conforming to ASTM C 1396.
   2. Applications: Installed in fire-resistance-rated and non-rated interior partition assemblies constructed in dry locations.
   3. Products: Provide one of the following, or equal.

      a. “ProRoc Type X” and “ProRoc Type C” manufactured by CertainTeed Corp.

      b. “ToughRock Fireguard” and “ToughRock Fireguard C” manufactured by GP Building Products.

      c. “Gold Bond Fire-Shield” and “Gold Bond Fire-Shield C” manufactured by National Gypsum Co.

d. “SHEETROCK “Firecode Core”” and “SHEETROCK “Firecode C Core””

4. Requisite Properties:

a. Minimum Size: At least 4-foot by 8-foot sheets.

b. Minimum Thickness: At least 5/8-inch.

c. Core: Provide Type X panels in walls and Type C panels in ceilings, unless otherwise indicated on the Drawings.

d. Minimum Mass: At least 2.2 pounds per square foot.

e. Edges: Tapered long edges and square ends.

f. Facers: Paper face, back, and long edges.

B. Mold- and Moisture-Resistant Fire-Resistance-Rated Gypsum Wall and Ceiling Board:

1. Description: Mold- and moisture-resistant and fire-resistance-rated gypsum board conforming to ASTM C 1396.
2. Applications: Installed as the inside face of exterior wall assemblies; and in fire-resistance-rated and non-rated interior partition assemblies constructed in wet locations.
3. Products: Provide one of the following, or equal.

a. “ProRoc Moisture and Mold Resistant Gypsum board with M2Tech” manufactured by CertainTeed Corp.

b. “ToughRock Mold-Guard” manufactured by GP Building Products.

c. “Gold Bond XP Gypsum Board” manufactured by National Gypsum Co.

d. “SHEETROCK Mold Tough” manufactured by USG Corp.

4. Requisite Properties:

a. Minimum Size: At least 4-foot by 8-foot sheets.

b. Minimum Thickness: At least 5/8-inch.

c. Core: Provide Type X panels in walls and Type C panels in ceilings, unless otherwise indicated on the Drawings.

d. Minimum Mass: At least 2.2 pounds per square foot.

e. Edges: Tapered long edges and square ends.

f. Facers: Heavy-duty mold- and moisture-resistant paper face, back, and long edges.

5. Performance Requirements:

a. Mold Resistance: Must earn a score of at least 10, when tested in conformance with ASTM D 3273.

2.03 METAL TRIM

A. Steel Trim:

1. Description: Paper-faced galvanized steel sheet trim pieces conforming to ASTM C 1047.
2. Manufacturers: Provide products manufactured by one of the following, or equal.

a. CEMCO.

b. Clinch-On Cornerbead Co.

c. Stockton Products.

d. Western Metal Lath.

e. USG Corp.

3. Products: “BEADEX” paper-faced metal bead and trim manufactured by USG Corp., or equal.

a. Corner Beads: Provide to protect exterior corners. Provide corner beads with notched or flexible flanges at curved edges.

1) 90-degree Outside Corner Bead: “Micro Bead Style”, or equal.

2) 90-degree Inside Corner Bead: “B2 Style”, or equal.

b. Casing Beads: Provide long-flanged L- or LC-beads at exposed panel edges indicated as receiving joint compound; provide short-flanged U-beads at exposed panel edges that do not receive joint compound.

1) J Trims (J-shaped with exposed long flange): “B9J Style”, or equal.

2) L Trims (L-shaped with exposed long flange): “B4 Style”, or equal.

B. Metal Control Joints:

1. Description: One-piece solid zinc control joint supplied with factory-applied removable tape to ensure a clean joint.
2. Products: Provide one of the following, or equal.

a. “NO93 Control Joint” manufactured by Alabama Metal Industries Corp. Building Products (AMICO).

b. “Niles-093 Zinc Control Joint” manufactured by Niles Building Products Co.

c. “SHEETROCK Zinc Control Joint No. 093” manufactured by USG Corp.

3. Requisite Properties:

a. Minimum Length: At least 10 feet long; provide longest possible lengths to avoid joints.

2.04 INSTALLATION MATERIALS

A. Fasteners: Provide #6-32 UNC 2B (0.138-inch shank diameter, 32 threads per inch) by at least 1-1/4-inch long, Philips bugle head, coarse thread, self- piercing or self-drilling (as applicable) phosphate coated steel screw fasteners, unless another fastener type is explicitly indicated; or supplied, required, recommended, or accepted by the manufacturer for actual in-service conditions applicable to the project.

B. Laminating Adhesive:

1. Description: Lightweight, sandable, chemically setting powder compound conforming to ASTM C 475.
2. Application: Used for bonding gypsum board to wood or metal studs, laminating gypsum board to gypsum board, and for bonding gypsum board to concrete or CMU walls.
3. Product: “SHEETROCK Easy Sand Joint Compound” manufactured by USG Corp., or equal.

2.05 JOINT TREATMENT MATERIALS

A. Joint Tape:
   1. Description: Nominal 2-inch wide gypsum panel joint and corner reinforcement conforming to ASTM C 475.
   2. Products:

      a. Fiberglass Joint Tape: “SHEETROCK Fiberglass Drywall Tape” manufactured by USG Corp., or equal.

      b. Paper Joint Tape: “BEADEX Drywall Joint Tape” manufactured by USG Corp., or equal.

      c. Fiberglass Mesh Tape: Prohibited.

B. Setting-Type Joint Compound:
   1. Description: Lightweight, sandable, chemically setting powder compound conforming to ASTM C 475, and used for embedding joint tape and finishing interior gypsum panels.
   2. Applications:

      a. Pre-Filling Gypsum Panel Joints throughout the Project: Use setting-type compound for open joints, beveled panel edges, and at damaged surface areas at all locations.

      b. All Other Coats: Use setting-type compound for embedding and first coat, fill coat, finish coat, and skim coat at wet locations; and at locations where panels are subject to moisture and high humidity.
   3. Product: “SHEETROCK DURABOND” manufactured by USG Corp., or equal.

C. Drying-Type Joint Compound:
   1. Description: Vinyl-type compound conforming to ASTM C 475, and used for embedding joint tape, finishing interior gypsum panels, and hand-applying simple texturing.
   2. Application: Use for embedding and first coat, fill coat, finish coat, and skim coat at dry locations, and at locations where joint is subject to moisture and high humidity.
   3. Product: “SHEETROCK All Purpose Joint Compound – SELECT” and “SHEETROCK Brand Plus 3 Lightweight All-Purpose Joint Compound” manufactured by USG Corp., or equal.

2.06 ACCESSORIES

A. Applied Level 5 Wallboard Finish Products: Prohibited.

B. Repair Clips: “SHEETROCK Drywall Repair Clips” manufactured by USG Corp., or equal.

C. Other Accessories: Provide accessories and secondary items normally furnished or necessary for a complete installation; or supplied, required, recommended, or accepted by the manufacturer for actual in-service conditions applicable to the project.

2.07 MARKING AND IDENTIFICATION

A. Description: Fire walls, fire barriers, fire partitions, smoke barriers and smoke partitions, and other walls required by the California Building Code to have protected openings or penetrations must be effectively and permanently identified with stenciling located in accessible concealed floors, floor-ceiling assemblies, plenums, and attic spaces

B. Paint Products: Specified in Section 09 91 00.

C. Fire Walls, Fire Barriers, and Fire Partitions: Paint 6-inch high stripes not more than 15 feet from the end of each fire wall, fire barrier, or fire partition; and at intervals of not more than 30 feet, when measured horizontally along the wall, barrier, or partition. Paint stenciled letters over the 6-inch high stripes, leaving at least a one-inch border around the stenciled letter copy.
   1. Stripe Color: Match Federal Standard 595B color FS 31350 (red).
   2. Stenciled Letter Color: Match Federal Standard 595B color FS 37925 (insignia white).
   3. Stenciled Letter Font: 288-Point Linotype Neue Helvetica Regular Bold.
   4. Stenciled Letter Copy:
      a. Fire Walls: “FIRE WALL – PROTECT ALL OPENINGS”.
      b. Fire Barriers: “FIRE BARRIER – PROTECT ALL OPENINGS”.
      c. Fire Partitions: “FIRE PARTITIONS – PROTECT ALL OPENINGS”.

D. Smoke Barriers and Smoke Partitions: Paint 6-inch high stripes not more than 15 feet from the end of each smoke barrier or smoke partition; and at intervals of not more than 30 feet, when measured horizontally along the wall, barrier, or partition. Paint stenciled letters over the 6-inch high stripes, leaving at least a one-inch border around the stenciled letter copy.
   1. Stripe Color: Match Federal Standard 595B color FS 36492 (gray).
   2. Stenciled Letter Color: Match Federal Standard 595B color FS 37038 (black).
   3. Stenciled Letter Font: 288-Point Linotype Neue Helvetica Regular Bold.
   4. Stenciled Letter Copy:
      a. Smoke Barriers: “SMOKE BARRIER – PROTECT ALL OPENINGS”.
      b. Smoke Partitions: “SMOKE PARTITIONS – PROTECT ALL OPENINGS”.

PART 3 - EXECUTION

3.01 INSTALLATION REQUIREMENTS

A. General:
   1. Ensure proper supervision practices are followed at the project site before the installer begins work and at all times during installation.
   2. Verify in-place supporting and adjacent construction conforms to the manufacturer’s requirements or recommendations and satisfies all other conditions that might affect the quality of installation or the durability, appearance, or performance of installed gypsum board and adjacent items.
   3. Install gypsum board using materials and methods required, recommended, or accepted by the manufacturer, along with manufacturer-recommended accessories and techniques.
   4. Set items true to line, to required levels and lines, and plumb, level, and square, without warp or rack, with flush well-fitted joints, and in alignment with adjacent construction.
   5. Securely attach gypsum board in place to supporting construction.
   6. Installed gypsum board must be warrantable. Do not install, correct, or replace gypsum board in a manner that results in any warranty or guarantee becoming void.

B. Special Techniques:
   1. Single-Layer Application:
      a. On ceilings, apply gypsum panels before wall or partition board application to greatest extent possible, and at right angles to framing, unless otherwise indicated.

b. On partitions and walls, apply gypsum panels vertically (parallel to framing), unless otherwise indicated or required by fire-resistance-rated assemblies; minimize end joints.

c. At stairwells and other high walls, install panels horizontally, unless otherwise indicated or required by fire-resistance-rated assemblies.

d. On Z-furring members, apply gypsum panels vertically (parallel to framing) with no end joints. Locate edge joints over furring members.

e. Stagger abutting end joints not less than one framing member in alternate courses of panels.

f. Securely attach gypsum panels to supports with steel drill screws.

2. Multilayer Application:

a. On partitions and wall assemblies, apply gypsum board indicated for base layers and face layers vertically (parallel to framing) with joints of base layers located over stud or furring member and face-layer joints offset at least one stud or furring member with base-layer joints, unless otherwise indicated or required by fire-resistance-rated assembly. Stagger joints on opposite sides of partitions.

b. On Z-furring members, apply base layer vertically (parallel to framing) and face layer either vertically (parallel to framing) or horizontally (perpendicular to framing) with vertical joints offset at least one furring member. Locate edge joints of base layer over furring members.

c. Securely attach base layers and face layers separately to supports with screws. Do not glue multiple layers of gypsum board together.

3. Trim:

a. General: For trim with back flanges intended for fasteners, attach to framing with same fasteners used for panels. Otherwise, attach trim in conformance with manufacturer's instructions.

b. Control Joints: Install control joints in conformance with ASTM C 840 and in specific locations indicated or accepted by the Architect.

C. Trim: Install cornerbead at outside corners; install LC-Bead or U-Bead at exposed panel edges.

4. Finishing Gypsum Board:

a. Treat gypsum board joints, interior angles, edge trim, control joints, penetrations, fastener heads, surface defects, and other items and conditions as required to prepare gypsum board surfaces for decoration. Promptly remove residual joint compound from adjacent surfaces.

b. Prefill open joints, beveled edges, and damaged surface areas.

c. Apply joint tape over gypsum board joints, except those with trim having flanges not intended for tape.

C. Installation Tolerances: Install gypsum board to an allowable tolerance variation of not more than 1/4-inch from true position and not more than 1/8-inch and from plumb, level, and alignment.

D. Correction and Repair:

1. Correct deficiencies that do not conform to the Contract Documents.

2. Repair non-conforming, damaged and defective work.
3. Replace soiled items that cannot be cleaned to the same condition as new.

E. Protection:
1. Protect installed gypsum board in place from soiling, deterioration, and damage until Substantial Completion.
2. Remove protection when it's no longer needed and before Substantial Completion.

3.02 GYPSUM BOARD FINISH SCHEDULE

A. General: Finish gypsum board surfaces with exposed joints, corners and edges reinforced or trimmed in conformance with ASTM C 840, Gypsum Association publication GA-214, "*Recommended Levels of Gypsum Board Finish*", and the following.

B. Levels of Gypsum Board Finish:
1. Level 0: Use for first layer of multiple layer construction and gypsum board ledge guards in elevator shafts.
2. Level 1: Use in plenum areas above ceilings, interior faces of shafts, in attics, and in areas where the assembly will generally be concealed.
3. Level 2: Use where moisture-resistant gypsum backing board is used as a substrate for tile; and in storage and similar areas where surface appearance is not of primary concern.
4. Level 3: Use in areas where heavy grade wall coverings are to be applied as the final decoration.
5. Level 4: Use in areas where light texture or backed lightweight wall covering is applied; and all areas indicated as receiving a paint finish, except where Level 5 finish is indicated.
6. Level 5 (spray and roller-applied products are prohibited): Use where indicated on the Drawings.

END OF SECTION

©AWCWEST 18E22 All rights reserved.
RSTLNE. TAGDSC, ELMTC, CLSC1010

SECTION 09 30 00
TILING

PART 1 - GENERAL

1.1 SUMMARY

A. Section Includes:
   1. Tile surfacing units.
   2. Thresholds.
   3. Installation materials.
   4. Supplementary components and accessories normally furnished or necessary for a complete installation, whether or not such items are indicated on the Drawings or included in the Specifications.

B. Related Requirements:
   1. Section 03 35 10 for concrete flatwork finishing and curing; and for preventative MVER products.
   2. Section 09 05 16 for preparation of concrete slabs for finish flooring; and for remedial MVER products.

1.2 SECTION REQUIREMENTS

A. Regulatory Requirements:
   1. Allowable Static Coefficient of Friction Value for Polish-Coated Flooring Surfaces (SCOF): At least 0.6 for level surfaces and at least 0.8 for sloped surfaces, when measured in conformance with ASTM D 2047.
   2. Allowable Dynamic Coefficient of Friction Value for Hard Surface Flooring (DCOF): Between 0.35 and 0.45, with at least 0.42 minimum “passing” value, when measured in conformance with ANSI 326.3 under wet conditions.

B. Qualifications:
   1. Installer: Company or individuals must have at least 5 years’ experience installing tile for at least 30 previous projects similar to this project in size, material, design, and complexity.
   2. Supervisors: Individuals must have at least 7 years’ experience installing tile for at least 30 previous projects similar to this project in size, material, design, and complexity, including at least 2 years’ supervisory experience directing and leading tile installers.

C. Submittals: Submit product data, shop drawings, samples, and written descriptions of specified qualifications.

D. Preinstallation Meeting:
   1. Hold a meeting after submittal approval and at least 10 business days before beginning installation.
   2. During the meeting, review the Contract Documents, submittals, project conditions, and installation sequence and methods, including special details and conditions that might affect installation
   3. Identify and discuss adverse or unfavorable conditions detrimental to protecting stored materials or to installation; or to the quality, durability, appearance, or performance of installed tile. Resolve each condition.

4. Finalize construction schedule.
5. Record significant discussions and distribute meeting minutes. Do not begin installation until disagreements are successfully resolved to the satisfaction of all parties.

E. Field Samples: Include *in-situ* mockups as part of the work of this specification section.
1. The Architect reviews field samples for conformance to the Contract Documents and approves or rejects them as the standard by which subsequent work is evaluated.
2. Revise field samples and repeat reviews, including arranging all revisions and paying all revision costs, until accepted in writing by the Architect. Final acceptance of tile is made from field samples.
3. After acceptance, promptly identify and protect field samples for reference until Substantial Completion.
4. Approved field samples may remain part of the work after being identified for future reference.

F. Maintenance Material Submittals: Before Final Completion, deliver to the Owner tile cleaning materials, equipment, accessories, and instructions; and extra stock materials to replace those worn or damaged as a result of normal occupancy.
1. Furnish at least 2 percent of the total installed for each tile type, color, composition, grade, finish, and variety.
2. Furnish at least 2 percent of the total amount installed for each grout type, color, and composition. but not less than one unopened container.

PART 2 - PRODUCTS

2.1 TILE SURFACING UNITS

A. Products: Indicated in the Finish Legend on the Drawings, Sheet A8.50, or equal.

2.2 THRESHOLDS

A. Aluminum Thresholds: Indicated on the Drawings or selected by the Architect, or equal.

2.3 INSTALLATION MATERIALS

A. Concrete Repair:
1. Description: Trowel-grade cementitious products used for non-structural repair indoor and outdoor concrete flatwork.
2. Product: “ARDEX CP” manufactured by ARDEX Engineered Cements, or equal, unless another type is explicitly indicated or otherwise supplied, required, recommended, or accepted by the manufacturer

B. Trowelable Leveling and Patching Compounds: Specified in Section 03 54 16, unless other products are supplied, required, recommended, or accepted by the manufacturer for the applications indicated.

C. Moisture Vapor Transmission Reduction Coating: Specified in Section 03 35 10 (preventative) or Section 09 05 16 (remedial), unless another coating is supplied, required, recommended, accepted by the by manufacturer for actual in-service conditions applicable to the project.

D. Fluid-Applied Waterproofing / Crack Isolation Membrane:
1. Products: Provide one of the following, or equal.

a. “RedGard” elastomeric membrane manufactured by Custom Building Products.
b. “Laticrete HydroBan” manufactured by LATICRETE International, Inc.
c. “Mapelastic AquaDefense” manufactured by Mapei Corp.

2. Accessories:
   a. Primer: One-part waterproofing / crack isolation membrane diluted with 4 parts water and applied at a rate of 300 square feet per gallon of reduced material; or other substrate sealer or primer supplied, required, recommended, approved or accepted manufactured by the waterproofing/crack isolation membrane manufacturer.
   b. Fiberglass Mesh: Provide manufacturer’s standard alkali-resistant reinforcing mesh for changes of plane and for gaps 1/8-inch wide or greater.
   c. Other Accessories: Provide other accessories and secondary items supplied, required, recommended, approved, or accepted manufactured by the waterproofing/crack isolation membrane manufacturer.

E. Thin Bed Mortar (Thinset) Installations (horizontal applications between 3/32- and 3/16-inch thick after beat-in):
   1. Description: Premium-grade (best quality grade), single-component, ultra-high-performance, polymer-modified Portland cement mortar conforming to A118.15 shear bond strength requirements.
   2. Application: Used for the installation of interior and exterior floor and wall vitreous, semi-vitreous or non-vitreous tile (ceramic, mosaic, quarry, and cement body tile); impervious porcelain tile; and natural stone veneer and stone tile.
   3. Products: Provide one of the following, or equal.
      a. “MegaFlex Crack Prevention Mortar” manufactured by Custom Building Products.
      b. “254 Platinum” manufactured by LATICRETE International, Inc.
      c. “Ultraflex 3” manufactured by Mapei Corp.

F. Medium Bed Mortar Installations (horizontal applications between 3/8- and 3/4-inch thick after beat-in):
   1. Description: Regular-setting, polymer-modified mortar conforming to A118.15 shear bond strength requirements.
   2. Application: Used for the installation of the installation of
      a. large-format dimensional tile (greater than 12 by 12 inches);
      b. inconsistent thickness natural stone; and
      c. tiles and pavers having slight substrate irregularity.
   3. Products: Provide one of the following, or equal.
      a. “Marble, Granite & Travertine Premium Medium Bed Mortar” manufactured by Custom Building Products.
      b. “LATICRETE 4-XLT” manufactured by LATICRETE International, Inc.
      c. “Ultraflex LFT” manufactured by Mapei Corp.

G. Polymer-Modified Cementitious Sanded Grout:
   1. Description: Premium-grade, pre-mixed, Portland cement sanded grout conforming to ANSI A118.7, and having a specifically-tailored, integrally-mixed antimicrobial agent.
   2. Application: Used for typical joints between 1/8- and 1/2-inch wide.
   3. Products: Provide one of the following, or equal.
      a. “Prism Ultimate Performance Grout” manufactured by Custom Building Products.
      b. “LATICRETE PermaColor” manufactured by LATICRETE International, Inc.
      c. “Ultracolor Plus FA” manufactured by Mapei Corp.
   4. Colors: Indicated on the Drawings or selected by the Architect.

H. Polymer-Modified Cementitious Non-Sanded Grout:
   1. Description: Premium-grade, pre-mixed, Portland cement non-sanded grout conforming to ANSI A118.6, and having a specifically-tailored, integrally-mixed antimicrobial agent.
   2. Application: Used for the installation of narrow grout joints between 1/16- and 1/8-inch wide, and especially with
      a. highly glazed or polished tile, marble, and natural stone that might scratch with sanded grouts; and
      b. glass mosaic tile grout installations.
   3. Products: Provide one of the following, or equal.
      a. “Polyblend Non-Sanded Grout” manufactured by Custom Building Products.
      b. “LATICRETE 1600” manufactured by LATICRETE International, Inc.
      c. “Keracolor U” manufactured by Mapei Corp.
   4. Colors: Indicated on the Drawings or selected by the Architect.
   5. Masonry Joints: Indicated on the Drawings or selected by the Architect.

I. Mix Water: Provide fresh, clean, clear, potable water from a domestic source. Water must conform to ASTM C 1602 and be free of oil, grease, waxy films, curing compounds, release agents, and other deleterious materials, including salts, acids, alkalis, organic materials, detergents, and other matter that might negatively affect tile quality, durability, appearance**,** or performance.

2.4 ACCESSORIES

A. Trim Units: Coordinate with sizes and coursing of adjoining tile. Provide shapes indicated on the Drawings.

B. Grout Release:
   1. Description: Temporary, water soluble, pre-grout coating.
   2. Application: Used to provide protection against grout & mortar staining.
   3. Products: Provide one of the following, or equal.
      a. “Aqua Mix Grout Release” manufactured by Custom Building Products.
      b. “STONETECH Grout Release” manufactured by LATICRETE International, Inc.
      c. “UltraCare Grout Release” manufactured by Mapei Corp.

C. Cleaner: Supplied, required, recommended, or accepted by the manufacturer for use on the installed tile and actual in-service conditions applicable to the project. Cleaners must remove stains, dirt, and residue without damaging or altering tile and grout surfaces.

D. Grout Sealer: Manufacturer's standard product for sealing grout joints, which does not change either the color or appearance of installed grouts.

E. Other Accessories: Provide accessories and secondary items normally furnished or necessary for a complete installation; or supplied, required, recommended, or accepted by the manufacturer for actual in-service conditions applicable to the project.

PART 3 - EXECUTION

3.1 INSTALLATION REQUIREMENTS

A. General:

1. Ensure proper supervision practices are followed at the project site before the installer begins work and at all times during installation.
2. Verify in-place construction, project conditions, and the work of other specification sections conform to the manufacturer's instructions and other requirements and recommendations.
3. Verify substrates are dry and free of curing compounds, sealers, hardeners, and deleterious and other substances that might interfere with tile adhesion,
4. Protect work areas, surfaces, in-place construction, and installed and adjacent items against soiling and damage.
5. Prepare substrates as required, recommended, or accepted by the manufacturer without limitation; and in a manner that does not result in any warranty or guarantee becoming void.
6. Install tile using materials and methods required, recommended, or accepted by the manufacturer, along with manufacturer-recommended accessories and techniques.
7. Set tile true to line; plumb, level, and square with flush, well-fitted joints; and in alignment with adjacent construction.
8. Securely attach tile in place to supporting construction.
9. Completed work must match approved samples and mockups, as accepted by the Architect.
10. Installed tile must be warrantable. Do not install, correct, or replace tile in a manner that results in any warranty or guarantee becoming void.

B. Special Techniques:
1. Install waterproofing/crack prevention membrane in conformancewith ANSI A108.13 and the waterproofing/crack prevention manufacturer's written instructions to produce membrane of uniform thickness bonded securely to substrate.
2. Do not install tile over waterproofing/crack prevention membrane until membrane has cured and been tested to determine that it is watertight.
3. Install tile in conformance with the ANSI and TCNA quality standard publication requirements for wall installations.
4. Accurately form intersections and returns. Perform cutting and drilling without marring visible surfaces. Carefully grind cut edges abutting trim, finishes, or built-in items for straight aligned joints. Fit tile closely to electrical outlets, piping, fixtures, and other penetrations so plates, collars, or covers overlap stonetile.
5. Jointing Pattern: Lay tile in patterns as indicated on the Drawings.
6. Expansion Joints: Locate expansion joints and other sealant-filled joints, including control, contraction, and isolation joints, during installation.
7. Install thresholds at locations indicated; set in same type of setting bed as abutting field tile, unless otherwise indicated.
8. Grout tile in conformance with the requirements of ANSI A108.10.
9. Apply grout sealer to cementitious grout joints in conformance with the grout-sealer manufacturer's written instructions. As soon as grout sealer has penetrated grout joints, remove excess sealer and sealer that has gotten on tile faces by wiping with soft cloth.

C. Correction and Repair:
1. Correct deficiencies that do not conform to the Contract Documents.
2. Repair non-conforming, damaged and defective work.
3. Replace soiled items that cannot be cleaned to the same condition as new.

D. Protection:
1. Protect installed equipment in place from soiling, deterioration, and damage until Substantial Completion.
2. Remove protection when it's no longer needed and before Substantial Completion.

END OF SECTION

©AWCWEST 18E22 All rights reserved.

SECTION 09 51 13
ACOUSTICAL PANEL CEILINGS

PART 1 - GENERAL

1.1 SUMMARY

A. Section Includes:
   1. Acoustical ceiling panels.
   2. Suspension system.
   3. Installation materials.
   4. Supplementary components and accessories normally furnished or necessary for a complete installation, whether or not such items are indicated on the Drawings or included in the Specifications.

1.2 SECTION REQUIREMENTS

A. Regulatory Requirements:
   1. Surface-Burning Characteristics: Provide acoustical ceilings having a maximum FSI Value of 25 or less and a maximum SDI Value of less than 450 (Class A), when tested in conformance with ASTM E 84.

A. Qualifications:
   1. Installer: Company or individuals must have at least 5 years' experience installing acoustical ceilings for at least 30 previous projects similar to this project in size, material, design, and complexity.
   2. Supervisors: Individuals must have at least 7 years' experience installing acoustical ceilings for at least 30 previous projects similar to this project in size, material, design, and complexity, including at least 2 years' supervisory experience directing and leading acoustical ceiling installers.

B. Submittals: Submit product data, shop drawings, samples, coordination drawings, and written descriptions of specified qualifications.

C. Maintenance Material Submittals:
   1. Deliver to the Owner acoustical ceiling cleaning materials, equipment, accessories, and instructions; and extra stock materials to replace those worn or damaged as a result of normal occupancy.
   2. Furnish at least 2 percent of the total installed for each acoustical ceiling type, color, composition, grade, finish, and variety, but not less than one unopened box or container.

PART 2 - PRODUCTS

2.1 MANUFACTURERS

A. Manufacturers: Provide products manufactured by one of the following, or equal.
   1. Armstrong World Industries.
   2. CertainTeed Corp.
   3. USG Interiors, Inc.

2.2 ACOUSTICAL CEILING PANELS

A. Description: Mineral fiber ceiling panels conforming to ASTM E 1264 Type XII (glass fiber base with membrane-faced overlay), Form 2 (cloth), Pattern E (lightly textured).

B. Product: “Radar Climaplus Performance” manufactured by USG Interiors, Inc., or equal.

C. Requisite Properties:
   1. Style: 2227.
   2. Size: 24 inches by 24 inches.
   3. Color: White.
   4. Surface Finish: Factory-applied latex paint.
   5. Edge Detail: Shawdowline Tapered.

D. Performance Requirements:
   1. Minimum Noise Reduction Coefficient (NRC): At least NRC 0.80, when tested in conformance with ASTM E 492 and ASTM E 989.
   2. Minimum Ceiling Attenuation Class (CAC): At least CAC 35, when tested in conformance with ASTM E 492 and ASTM E 1414.
   3. Minimum Light Reflectance (LR): Provide LR value of at least 0.87, when tested in conformance with ASTM E 1477.

2.3 SUSPENSION SYSTEMS

A. Description: Non-rated direct hung ceiling suspension system conforming to ASTM C 635 requirements for Heavy Duty structural classification.

B. Product: “USG Donn Brand DX/DXL” manufactured by USG Interiors, Inc., or equal.

C. Requisite Properties:
   1. Size: 15/16-inch bottom flange face dimension.
   2. Profile Type: Exposed tee.
   3. Material: Hot dip galvanized steel sheet.
   4. Finish: Manufacturer’s standard shop-applied pre-treatment and baked enamel finish.
   5. Color: White.

2.4 INSTALLATION MATERIALS

A. Attachment Devices: Sized for 5 times the design load indicated in ASTM C 635, Table 1, Direct Hung, unless otherwise indicated. Comply with seismic design requirements.

B. Wire: Soft temper, zinc-coated, pre-stretched, galvanized carbon steel wire conforming to ASTM A 641 Class 3 or A coating and having a minimum yield-stress load of 3 times the design load.
   1. Hanger Wire: Minimum 0.106-inch diameter. (12-gage ASW)
   2. Diagonal Bracing Wire: Minimum 0.106-inch diameter. (12-gage ASW)
   3. Provide heavier gage hanger wire for ceiling systems heavier than 4 psf.

C. Compression Struts:
   1. Cold or hot rolled angles, loadbearing or non-loadbearing studs, EMT or rigid conduit, or black iron.

2. Cold-rolled steel section with maximum L/R ratio of 200.

D. Engineered Compression Struts:
   1. Description: Pre-engineered telescoping seismic compression posts manufactured from heavy-wall galvanized tubing.
   2. Application: Manufactured compression struts may be provided in lieu of compression struts indicated above when installed in compliance with its manufacturer's instructions.
   3. Products: "ARMSTRONG 5594 Ceiling Tile Compression Strut" manufactured by Armstrong World Industries or "Donn Brand Compression Post VSA" manufactured by USG Interiors, Inc. (ICC ES Report No. ESR-1222), or equal.

E. Fastenings: Provide backings, inserts, loose connection hardware, fasteners, anchors, attachments, connectors, and other items supplied, required, recommended, or accepted by the manufacturer for actual in-service conditions applicable to the project.

2.5 ACCESSORIES

A. Seismic Clips:
   1. Description: 2-inch beam end retaining clip that joins main beam or cross tee to wall molding and web of grid with no visible pop rivets.
   2. Products: "BERC 2" clips manufactured by Armstrong World Industries or "ACM7" clips by USG Interiors, Inc., or equal.

B. Seismic Separation Joints: Provide ceiling system manufacturer's standard at seismic separation joints at ceiling locations where the contiguous area of non-broken ceiling is 2,500 square feet or greater.

C. Wall Molding: Provide the following, with prefinished exposed flanges matching suspension system.
   1. Perimeter Molding: 1-1/4-inch by 15/16-inch perimeter wall angle moldings.
   2. Shadow Molding: "No. 7877" 15/16-inch flange by 15/16-inch-inch high by 1/4-inch shadow molding manufactured by Armstrong World Industries, or equal.
   3. Shadow Molding: "No. 7823" 7/8-inch flange by 2-inch high by 3/4-inch reveal hemmed-edge shadow molding manufactured by Armstrong World Industries, or equal.

D. Perimeter Trim:
   1. "Axiom Building Perimeter System" manufactured by Armstrong World Industries, or equal, for light pockets in corridor and roller window pockets – both with slots for linear return diffusers.
   2. "Axiom Building Perimeter System" manufactured by Armstrong World Industries, or equal, for ACT ceiling tiles flush with adjacent gypsum board soffits.

E. Other Accessories: Provide accessories and secondary items normally furnished or necessary for a complete installation; or supplied, required, recommended, or accepted by the manufacturer for actual in-service conditions applicable to the project.

PART 3 - EXECUTION

3.1 INSTALLATION REQUIREMENTS

A. General:

1. Ensure proper supervision practices are followed at the project site before the installer begins work and at all times during installation.
2. Verify in-place supporting and adjacent construction conforms to the manufacturer's requirements or recommendations, and satisfies all other conditions that might affect the quality of installation or the durability, appearance, or performance of installed acoustical ceiling and adjacent items.
3. Install acoustical ceilings using materials and methods required, recommended, or accepted by the manufacturer, along with manufacturer-recommended accessories and techniques.
4. Set acoustical ceilings true to line, to required levels and lines, and plumb, level, and square, without warp or rack, with flush well-fitted joints, and in alignment with adjacent construction
5. Securely attach acoustical ceilings in place to supporting construction.
6. Installed acoustical ceilings must be warrantable. Do not install, correct, or replace acoustical ceilings in a manner that results in any warranty or guarantee becoming void.

B. Special Techniques:
1. Suspend acoustical ceiling hangers from building's structural members.
2. Secure bracing wires to suspension members and to supports with at least four tight turns. Suspend bracing from building's structural members as for hangers, without attaching to permanent metal forms, steel deck, or steel deck tabs. Attach bracing wires to concrete with cast-in-place or post installed anchors.
3. Install edge moldings and trim at acoustical ceiling perimeter of acoustical ceiling area and where necessary to conceal edges of acoustical panels.
4. Install suspension system runners so they are square and securely interlocked with one another. Remove and replace dented, bent, or kinked members.
5. Install acoustical panels with undamaged edges and fit accurately into suspension system runners and edge moldings. Scribe and cut panels at borders and penetrations to provide a neat, precise fit.

C. Installation Tolerances: Ceilings must conform to the following tolerances, which are non-cumulative.
1. Maximum Out of Plane: Surfaces may not vary by more than 1/8-inch in 10 feet.
2. Carrying Channel Maximum Out of Level: Not more than 1/8-inch in 12 feet,
3. Main Runner Maximum Out of Level: Not more than 1/4-inch in 10 feet,
4. Main Runner Maximum Deflection: Not more than L/360 of span,
5. Maximum Misalignment of Main Runners: 0.015-inch.
6. Maximum Misalignment of Intersection Members: 0.020-inch.
7. Main Runner Bow, Camber, and Twist: Not more than 1/32-inch in 2 feet bow or camber; not more than one degree twist.

D. Correction and Repair:
1. Correct deficiencies that do not conform to the Contract Documents.
2. Repair non-conforming, damaged and defective work.
3. Replace soiled items that cannot be cleaned to the same condition as new.

E. Protection:
1. Protect installed acoustical ceilings in place from soiling, deterioration, and damage until Substantial Completion.
2. Remove protection when it's no longer needed and before Substantial Completion.

END OF SECTION

SECTION 09 67 13
MECHANICAL ROOM COATING

PART 1 - GENERAL

1.01 SUMMARY

A. Section Includes:
   1. Mechanical equipment room floor coatings.
   2. Surface preparation.
   3. Supplementary components and accessories normally furnished or necessary for a complete installation, whether or not such items are indicated on the Drawings or included in the Specifications.

B. Related Requirements:
   1. Section 03 35 10 for concrete flatwork finishing and curing.
   2. Section 09 05 16 for preparation of concrete slabs for finish flooring.

1.02 SECTION REQUIREMENTS

A. Regulatory Requirements:
   1. Radiant Flux Classification: Provide flooring having an average critical radiant flux value of at least 0.45 (Class I), when tested in conformance with ASTM E 648.
   2. Allowable Static Coefficient of Friction Value (SCOF): At least 0.6 for level surfaces and at least 0.8 for sloped surfaces, when measured in conformance with ASTM D 2047.
   3. Allowable Dynamic Coefficient of Friction Value (DCOF): Between 0.35 and 0.45, when measured in conformance with ANSI B101.3 under wet conditions.

B. Qualifications:
   1. Manufacturer: Company or individuals must have at least 10 years' experience manufacturing flooring material installed on at least 200 previous projects similar to this project in size, material, design, and complexity.
   2. Installer: Company or individuals must have at least 5 years' experience installing flooring for at least 30 previous projects similar to this project in size, material, design, and complexity.
   3. Supervisors: Individuals must have at least 7 years' experience installing flooring for at least 30 previous projects similar to this project in size, material, design, and complexity, including at least 2 years' supervisory experience directing and leading flooring installers.

C. Submittals: Submit product data, shop drawings, samples, and written descriptions of specified qualifications.

D. Preinstallation Meeting:
   1. Hold meeting after submittal approval and at least 10 business days before beginning installation.
   2. During the meeting, review

      a. Contract Documents, submittals, manufacturer's instructions, project conditions, and installation methods;

      b. special details and conditions that might affect installation;

c. substrates and surface preparation;

d. installation sequence;

e. procedures for protecting stored materials and installed flooring; and

f. specified requirements for testing, inspection, reports, and closeout submittals.

3. Identify conditions detrimental to installation.
4. Finalize construction schedule.
5. Record significant discussions and distribute meeting minutes.
6. Do not begin installation until disagreements are successfully resolved to the satisfaction of all parties.

E. Field Samples: Include *in-situ* mockups as part of the work of this specification section.

1. The Architect reviews field samples for conformance to the Contract Documents and approves or rejects them as the standard by which subsequent work is evaluated.
2. Revise field samples and repeat reviews, including arranging all revisions and paying all revision costs, until accepted in writing by the Architect. Final acceptance of flooring is made from field samples.
3. After acceptance, promptly identify and protect field samples for reference until Substantial Completion.
4. Approved field samples may remain part of the work after being identified for future reference.

F. Maintenance Material Submittals:

1. Deliver to the Owner flooring cleaning materials, equipment, accessories, and instructions; and extra stock materials to replace those worn or damaged as a result of normal occupancy.
2. Furnish at least 2 percent of the total installed for each flooring type, color, composition, grade, finish, and variety, but not less than one unopened container.

PART 2 - PRODUCTS

2.01 MANUFACTURERS

A. Manufacturers: Provide products manufactured by one of the following, or equal.

1. Carlisle Coatings and Waterproofing.
2. Pacific Polymers International, Inc.
3. Urethane Polymers International, Inc.

2.02 MECHANICAL ROOM COATING

A. Description: 3-coat, high-solids content, urethane-based, cold fluid-applied, seamless and waterproof elastomeric foot traffic-bearing deck surfacing system conforming to ASTM C 957 requirements for minimum physical properties, and consisting of the following.

1. Base Coat: Aromatic polyurethane.
2. Top Coat (Color Coat): Aromatic polyurethane.

B. Products: Provide “ELASTO-DECK 5000 MR” deck coating system manufactured by Pacific Polymers International, Inc., or equal.

1. Average Membrane Thickness: At least 48 mils (dry).
2. Average Total System Thickness: At least 60 mils (dry).

3. Base and Intermediate Coat Exposure Limit: Not more than 72 hours.

C. Base Coat:
1. Description: Single-component, high adhesion strength aromatic urethane coating.
2. Product: “ELASTO-DECK 5001NG”.
3. Color: Tan.
4. Performance Requirements:

a. Ultimate Elongation: At least 700 percent, when tested in conformance with ASTM D 412.

b. Minimum Tensile Strength: At least 400 pounds per square inch, when tested in conformance with ASTM D 412.

c. Maximum Shore A Hardness: Not more than 55, when tested in conformance with ASTM D 2240.

D. Aggregate: Uniformly graded, No. 20 mesh, silica (quartz) sand aggregate having a minimum Moh's Hardness value of at least 6.5.

E. Top Coat:
1. Description: Single-component high tensile strength abrasion- and weather-resistant aromatic urethane coating.
2. Product: “ELASTO-GLAZE 6001 AL-HT”.
3. Color: Indicated on the Drawings or selected by the Architect.
4. Performance Requirements:

a. Ultimate Elongation: At least 200 percent, when tested in conformance with ASTM D 412.

b. Minimum Tensile Strength: At least 280, when tested in conformance with ASTM D 624.

c. Minimum Tear Strength: At least 2,700 pounds per square inch, when tested in conformance with ASTM D 412.

d. Maximum Shore A Hardness: Not more than 95, when tested in conformance with ASTM D 2240.

e. Maximum Abrasion Resistance: Not more than 0.029-mil DFT, when tested in conformance with ASTM D 4060 on a 4-inch by 4-inch sample with a CS-17 wheel, 1000 revolutions with 1000 grams weight.

f. Maximum Water Absorption: Not more than 1.5 percent, when tested in conformance with ASTM D 570.

2.03 SURFACE PREPARATION

A. Substrate Testing and Surface Preparation: Perform testing and corrective work, and prepare substrates in conformance with the requirements of Section 09 05 16.

B. Concrete Surface Profiling: Provide ICRI concrete surface profile CSP 3 to CSP 5 (between 10 and 40 mils), unless otherwise explicitly required, recommended, or accepted in writing by the covering manufacturer. Conform to the requirements of Section 09 05 16.

2.04 INSTALLATION MATERIALS

A. Concrete Repair:
   1. Description: Trowel-grade cementitious products used to fill and repair portions of indoor and outdoor concrete flatwork.
   2. Product: Provide “ARDEX CP” manufactured by ARDEX Engineered Cements, or equal, unless another type is explicitly indicated or otherwise supplied, required, recommended, or accepted by the manufacturer

B. Trowelable Leveling and Patching Compounds: Specified in Section 03 54 16, or as otherwise supplied, required, recommended, or accepted by the manufacturer for the applications indicated.

C. Moisture Vapor Transmission Reduction Coating: Specified in Section 03 35 10 (preventative) or Section 09 05 16 (remedial), unless another coating is supplied, required, recommended, accepted by the by manufacturer for actual in-service conditions applicable to the project.

D. Primer: “DECK-THANE”, or equal primer, or equal.

E. Flashing Tape: 4-inch wide by 30-mil thick “Webseal MicroSealant Tape” manufactured by EternaBond, Inc., or equal, unless another product is supplied, required, recommended, or accepted by the manufacturer.

F. Detail Membrane: Same material as base coat specified above.

2.05 ACCESSORIES

A. Sealant: “ELASTO-THANE 230”, or equal, single-component urethane sealant.

B. Cleaner: Chemically neutral, biodegradable, phosphate free cleaner with a pH between 7 and 10 designed to remove soil and residue without damaging flooring, and supplied, required, recommended, or accepted by the manufacturer for use on the installed flooring and actual in-service conditions applicable to the project.

C. Other Accessories: Provide accessories and secondary items normally furnished or necessary for a complete installation; or supplied, required, recommended, or accepted by the manufacturer for actual in-service conditions applicable to the project.

PART 3 - EXECUTION

3.01 INSTALLATION REQUIREMENTS

A. General:
   1. Ensure proper supervision practices are followed at the project site before the installer begins work and at all times during installation.
   2. Examine project conditions and field-verify ambient and existing conditions affecting flooring installation.
   3. Verify in-place supporting and adjacent construction conforms to the manufacturer’s requirements or recommendations, and satisfies all other conditions that might affect the quality of installation or the durability, appearance, or performance of installed and adjacent items.
   4. Protect work areas, surfaces, in-place construction, and installed and adjacent items against soiling and damage.

5. Prepare surfaces as required, recommended, or accepted by the manufacturer without limitation; and in a manner that does not result in any specified or other warranty or guarantee becoming void.
6. Install flooring using materials and methods required, recommended, or accepted by the manufacturer, along with manufacturer-recommended accessories and techniques.
7. Completed work must match approved samples and mockups accepted by the Architect.

B. Site Tests and Inspections:
1. Manufacturer Services: Installed work is subject to examination by the manufacturer's representative to determine conformance to manufacturer's instructions and other requirements and recommendations.

C. Correction and Repair:
1. Correct deficiencies that do not conform to the Contract Documents.
2. Repair non-conforming, damaged, and defective work.
3. Replace soiled items that cannot be cleaned to the same condition as new.
4. Installed flooring must be warrantable. Do not install, correct, or replace flooring in a manner that is un-warrantable by the manufacturer or that results in any other specified or other warranty or guarantee becoming void.

D. Protection:
1. Protect installed flooring in place from soiling, deterioration, and damage until Substantial Completion.
2. Do not store anything on or adjacent to or against installed flooring unless it is or they are protected from damage, as accepted in writing by the manufacturer's representative. Do not use installed flooring surfaces as work surfaces.
3. Remove protection when it's no longer needed and before Substantial Completion.

END OF SECTION

©AWCWEST 17B14 All rights reserved.
RTYPB02, USEO, ELMTA, CLSA1020

SECTION 09 81 33
ACOUSTICAL INSULATION, SEALANTS, AND ACCESSORIES

PART 1 - GENERAL

1.01 SUMMARY

A. Section Includes:
1. Concealed acoustical insulation.
2. Acoustical sealants.
3. Acoustical spray.
4. Firestop and acoustical putty pads.
5. Installation materials.
6. Supplementary components and accessories normally furnished or necessary for a complete installation, whether or not such items are indicated on the Drawings or included in the Specifications.

1.02 SECTION REQUIREMENTS

A. Submittals: Submit product data.

PART 2 - PRODUCTS

2.01 CONCEALED ACOUSTICAL INSULATION

A. Acoustical Board Insulation:
1. Description: Unfaced inorganic glass-fiber semi-rigid board acoustical insulation conforming to ASTM C 612 requirements for Type IA or IB insulation.
2. Products: Provide one of the following, or equal.

a. “CertaPro Commercial Board” manufactured by CertainTeed Corp.

b. “Insul-SHIELD” manufactured by Johns Manville.

c. “Fiberglass 700 Series, Type 703” manufactured by Owens Corning.

B. Acoustical Blanket Insulation:
1. Description: Unfaced inorganic glass-fiber blanket acoustical insulation conforming to ASTM C 665 Type I acoustical insulation requirements (blankets without membrane coverings).
2. Manufacturers: Provide one of the following, or equal.

a. “CertaPro AcoustaTherm” manufactured by CertainTeed Corp.

b. “Sound Control Batts” manufactured by Johns Manville.

c. “Sound Attenuation Batts/MW” manufactured by Owens Corning Fiberglass Corp.

C. Sound Attenuating Fire Blanket Insulation:

1. Description: Asbestos-free mineral fiber blanket acoustical insulation conforming to ASTM C 665 requirements for Type I acoustical insulation requirements (blankets without membrane coverings), manufactured from slag and naturally occurring rock.
2. Products: Provide one of the following, or equal.

    a. “FIBREX Sound Attenuation Fire Batt Acoustical insulation (SAFB)” manufactured by Fibrex Insulations Inc.

    b. “Thermafiber Sound Attenuating Fire Blankets (SAFB)” manufactured by Owens Corning.

    c. “ROCKWOOL AFB” manufactured by Roxul Inc.

2.02 ACOUSTICAL SEALANTS

A. Latex Sealants:
1. Description: Non-sag, paintable, non-staining siliconized acrylic-latex sealant conforming to ASTM C 834 requirements for Type OP (opaque sealant), Grade NF (does not meet the requirements for low temperature flexibility of Grade 0°C classification).
2. Application: Used where indicated at exposed and concealed joints and annular spaces around through-penetrations.
3. Products: Provide one of the following, or equal.

    a. “CP 506 Smoke and Acoustic Sealant” manufactured by Hilti, Inc.

    b. “QuietZone Acoustic Sealant” manufactured by Owens Corning.

    c. “AC-20 FTR” manufactured by Pecora Corp.

    d. “Tremflex 834” manufactured by Tremco, Inc.

    e. “Sheetrock Acoustical Sealant” manufactured by USG Corp.
4. Requisite Properties:

    a. Color: White.

B. Non-Drying, Non-Hardening, Non-Skinning Sealants:
1. Description: Single-component butyl rubber sound dampening elastomeric sealant.
2. Application: Installed at concealed joints where indicated.
3. Products: Provide one of the following, or equal.

    a. “BA-98” manufactured by Pecora Corp.

    b. “QuietSeal Acoustical Sealant QS-350” manufactured by Serious Materials, Inc.

    c. “Acoustical Sealant” manufactured by Tremco, Inc.

C. Fire Rated Acoustical Sealant: Provide one of the following, or equal.
1. “Fire Barrier 2001 Silicone RTV Foam” manufactured by 3M.
2. “CP 601S Elastomeric Firestop Sealant” manufactured by HILTI.
3. “Firetemp CI Caulk” manufactured by Johns Manville.
4. “Spec Seal ES100” manufactured by Specified Technologies, Inc.

D. Expanding Foam Sealant:

1. Description: Gun-applied, expanding spray foam sealant.
2. Application: Used to seal and insulate around common areas of energy loss, including foundation/sill plates, outdoor fixtures, pipe penetrations, etc.
3. Products: Provide one of the following, or equal.

    a. “GREAT STUFF PRO Gaps & Cracks” manufactured by The Dow Chemical Co.

    b. “Expanding Foam Polyfilla” manufactured by Polyfilla.

E. Preformed Tape Sealants:
1. Description: Compressible, self-extinguishing, UL-listed closed cell polyvinyl chloride foam tape with pressure sensitive adhesive.
2. Application: Installed at concealed joints where indicated.
3. Product: “Norseal V740FR” manufactured by Norton Performance Plastics Corp., or equal.
4. Requisite Properties:

    a. Size: One-inch minimum roll width.

    b. Thickness: At least 3/8-inch.

    c. Density: At least 6 pounds per cubic foot.

    d. Facing: Furnish tape in rolls with protective release liner on non-adhesive face.

2.03 ACOUSTICAL SPRAY

A. Description: Sprayable acrylic latex material.

B. Application: Used where indicated at exposed and concealed static or minimally dynamic joints or gaps in wall construction.

C. Products: Provide one of the following, or equal.
1. “CP 572 Smoke and Acoustic Spray” manufactured by Hilti, Inc.
2. “Spec Seal Smoke & Sound” manufactured by Specified Technologies, Inc.

D. Requisite Properties:
1. Spray must be mold and mildew resistant in conformance with ASTM G21.
2. Spray must have a minimum movement capability of at least 12.5 percent.

2.04 FIRESTOP AND ACOUSTICAL PUTTY PADS

A. Description: Sound deadening pads.

B. Application: Used to seal the external surfaces (back side) of metallic and nonmetallic switch and receptacle boxes to reduce airborne sound transmission in interior partitions.

C. Fire-Resistance Rated Construction (Firestop Putty Pads): Provide one of the following, or equal.
1. “CP 617 Firestop Putty Pads” manufactured by Hilti, Inc.
2. “Putty Pads” manufactured by International Protective Coatings
3. “Type FSP Firestop Putty” pads by Nelson Electric.
4. “Putty Pads” manufactured by Specified Technologies, Inc.

D. Elsewhere (Acoustical Putty Pads): Provide one of the following, or equal.
   1. “Lowry Box Pads” manufactured by Henry A. Lowry Co.
   2. “Sound Pad #68” manufactured by LH Dottie Co.

2.05 INSTALLATION MATERIALS

A. Acoustical insulation Hangers:
   1. Application: Used to attach acoustical insulation to clean, dry, smooth, non-porous solid surfaces.
   2. Manufacturer: Provide products manufactured by AGM Industries, Inc., or equal.
   3. Products: Provide the following, or equal.
      a. Anchors: “TACTOO Insul-Hangers” adhesively attached spindle-type anchors.
      b. Adhesive: “BOSS 348 Multi-Purpose Construction Adhesive” manufactured by Accumetric, LLC or other VOC-compliant acoustical insulation hanger adhesive.
      c. Acoustical insulation Standoff: One-inch “Clutch Clip”.
      d. Acoustical insulation Retaining Washers: “Style RC 200” round or “SC 250” square washers.
   4. Requisite Properties:
      a. Base Plate and Acoustical insulation Standoff and Retaining Washers: At least 2-inch square by at least 0.149-inch (MSG 28) base metal thickness galvanized perforated steel sheet.
      b. Retaining Washers: At least 1-1/2-inch square or diameter by at least 0.149-inch (MSG 28) base metal thickness galvanized perforated steel sheet.
      c. Spindle: At least 0.106-inch diameter (SWG 12), zinc-coated wire, depth to suit depth of acoustical insulation indicated.
      d. Adhesive: Adhesive used with impaling pins must either be manufactured or accepted by the acoustical insulation hanger manufacturer. “Peel and press” hangers with self-adhering adhesive backings are prohibited.

B. Mechanical Fasteners: Tape, staples, and other devices for fastening acoustical insulation supplied, required, recommended, or accepted by the acoustical insulation manufacturer.

C. Hanger Wire: At least 0.106-inch diameter (SWG 12) soft temper zinc-coated wire conforming to ASTM A 641, Class 3 or A coating.

D. Adhesive: Supplied, require, recommended, or accepted by the acoustical insulation manufacturer to bond acoustical insulation securely to substrates indicated without damaging acoustical insulation or substrates.

2.06 ACCESSORIES

A. Accessories: Provide accessories and secondary items normally furnished or necessary for a complete installation; or supplied, required, recommended, or accepted by the manufacturer for actual in-service conditions applicable to the project.

PART 3 - EXECUTION

3.01 INSTALLATION REQUIREMENTS

A. General:
1. Ensure proper supervision practices are followed at the project site before the installer begins work and at all times during installation.
2. Verify in-place supporting and adjacent construction conforms to the manufacturer’s requirements or recommendations, and satisfies all other conditions that might affect the quality of installation or the durability, appearance, or performance of installed acoustical insulation and adjacent items.
3. Install acoustical insulation in conformance with ASTM C 919 using materials and methods required, recommended, or accepted by the manufacturer, along with manufacturer-recommended accessories and techniques.
4. Extend acoustical insulation to envelop entire area insulated. Cut and fit tightly around obstructions and fill voids with insulation. Remove projections that interfere with placement.
5. Provide sizes to fit applications indicated and selected from manufacturer's standard thicknesses, widths, and lengths. Apply single layer of acoustical insulation to produce thickness indicated unless multiple layers are otherwise shown or required to make up total thickness.
6. Installed acoustical insulation must be warrantable. Do not install, correct, or replace acoustical insulation in a manner that results in any warranty or guarantee becoming void.

B. Special Techniques:
1. Wall Insulation:
    a. Install acoustical insulation in cavities formed by framing members.
    b. Use acoustical insulation widths and lengths that fill the cavities formed by framing members. If more than one length is required to fill cavity, provide lengths that will produce a snug fit between ends.
    c. Place acoustical insulation to produce a friction fit between edges of acoustical insulation and adjoining framing members.
    d. Stuff loose-fill acoustical insulation into miscellaneous voids and cavity spaces where shown. Compact to approximately 40 percent of normal maximum volume.
2. Ceiling Insulation:
    a. Install blanket acoustical insulation above ceilings where indicated.
    b. Maintain 3-inch clearance of acoustical insulation around recessed lighting fixtures.
3. Acoustical Sealant Installation:
    a. At sound-rated assemblies and elsewhere indicated, seal construction with a continuous bead of acoustical sealant at perimeter, behind control joints, and at openings and penetrations.
    b. Install acoustical sealant to both faces of partitions at perimeters and through penetrations.

C. Correction and Repair:
1. Correct deficiencies that do not conform to the Contract Documents.
2. Repair non-conforming, damaged and defective work.

D. Protection:
   1. Protect installed acoustical insulation in place from deterioration and damage until covered.
   2. Remove protection when it's no longer needed and before Substantial Completion.

END OF SECTION

©AWCWEST 18E22 All rights reserved.
RSTLNE. TAGDSC, ELMTC, CLSC1010

SECTION 09 91 00
PAINTING

PART 1 - GENERAL

1.1 SUMMARY

A. Section Includes:
   1. Field-applied finish paint.
   2. Surface preparation.
   3. Supplementary components and accessories normally furnished or necessary for a complete installation, whether or not such items are indicated on the Drawings or included in the Specifications.

B. Related Requirements:
   1. Section 05 05 13 for shop-applied steel primers and surface preparation; and for SSPC Environmental Zone definitions.
   2. Section 09 96 56 for epoxy coatings.
   3. Section 09 97 13 for high performance steel coatings applied to steel surfaces installed in SSPC Environmental Zones 1B, 2A, and 2B.

1.2 SECTION REQUIREMENTS

A. Submittals: Submit product data, samples, and written descriptions of specified qualifications.

B. Field Samples: Include *in-situ* mockups as part of the work of this specification section.
   1. The Architect reviews field samples for conformance to the Contract Documents and approves or rejects them as the standard by which subsequent work is evaluated.
   2. Revise field samples and repeat reviews, including arranging all revisions and paying all revision costs, until accepted in writing by the Architect. Final acceptance of tile is made from field samples.
   3. After acceptance, promptly identify and protect field samples for reference until Substantial Completion.
   4. Approved field samples may remain part of the work after being identified for future reference.

C. Maintenance Material Submittals:
   1. Before Final Completion, deliver to the Owner extra stock materials to replace those worn or damaged as a result of normal occupancy.
   2. Furnish at least one unopened gallon or container for each paint type, color, composition, grade, finish, and variety.

PART 2 - PRODUCTS

2.1 MANUFACTURERS

A. Manufacturers: Provide products manufactured by one of the following, or equal.
   1. Dunn Edwards.
   2. Vista Paint.

3. Benjamin Moore.

2.2 PAINT

A. Description: 100-percent premium grade (best grade) low- and no-VOC paints, unless otherwise indicated.

B. Products: Indicated in the Finish Legend on the Drawings, Sheet A8.50, or equal.

2.3 ACCESSORIES

A. Accessories: Provide accessories and secondary items normally furnished or necessary for a complete installation; or supplied, required, recommended, or accepted by the manufacturer for actual in-service conditions applicable to the project.

PART 3 - EXECUTION

3.1 INSTALLATION REQUIREMENTS

A. General:
   1. Ensure proper supervision practices are followed at the project site before the installer begins work and at all times during installation.
   2. Verify in-place construction, project conditions, and the work of other specification sections conform to the manufacturer's instructions and other requirements and recommendations.
   3. Protect work areas from dust and other airborne contaminants during surface preparation and paint installation. Protect adjacent surfaces against soiling and damage. Close and protect drains and other openings and penetrations to prevent paint intrusion or migration of liquids.
   4. Prepare substrates as required, recommended, or accepted by the manufacturer without limitation; and in a manner that does not result in any warranty or guarantee becoming void.
   5. Install paint using materials and methods required, recommended, or accepted by the manufacturer, along with manufacturer-recommended accessories and techniques.
   6. Only install paint under conditions that ensure finishes are free from blemishes and defects.
   7. Provide smooth surfaces of uniform finish, color, appearance, and coverage. Paint surfaces with cloudiness, spotting, holidays, runs, or other imperfections are prohibited and are rejected as non-conforming work.
   8. Do not exceed the application rates recommended by the manufacturer.
   9. Completed work must match approved samples and mockups, as accepted by the Architect.
   10. Installed paint must be warrantable. Do not install, correct, or replace paint in a manner that results in any warranty or guarantee becoming void.

B. Correction and Repair:
   1. Correct deficiencies that do not conform to the Contract Documents.
   2. Repair non-conforming, damaged and defective work. Replace soiled paint that cannot be cleaned to the same condition as new.

C. Protection:
   1. Protect installed equipment in place from soiling, deterioration, and damage until Substantial Completion.
   2. Remove protection when it's no longer needed and before Substantial Completion.

END OF SECTION

©AWCWEST 18E22 All rights reserved.

SUBSTRATE	NO. OF COATS	VISTA PAINT	DUNN-EDWARDS	BENJAMIN MOORE
EXTERIOR SURFACES - LOW VOC				
Concrete & CMU Substrates: As specified in Section 09 96 13 - Elastomeric Coatings				
Concrete & Brick Substrates: 100% Acrylic FLAT				
	1st Coat	4600 Uniprime II	ESPR00 Eff-Stop	023 Fresh Start Primer
	2nd Coat	2000 Duratone	EVSH10 Evershield Flat	400 Regal Select Flat
	3rd Coat	2000 Duratone	EVSH10 Evershield Flat	400 Regal Select Flat
CMU Substrates: 100% Acrylic FLAT				
	1st Coat	018 Acrylic Block Filler	SBPR00 Blockfill	M88 Latex Block Filler
	2nd Coat	2000 Duratone	EVSH10 Evershield Flat	400 Regal Select Flat
	3rd Coat	2000 Duratone	EVSH10 Evershield Flat	400 Regal Select Flat
CMU Substrates: 100% Acrylic ELASTOMERIC				
	1st Coat	4600 Uniprime II	ESPR00 Eff-Stop	023 Fresh Start Primer
	2nd Coat	500 Solotex	W370 Endurawall	056 Moorlastic
	3rd Coat	500 Solotex	W370 Endurawall	056 Moorlastic
Finished Wood Surfaces: 100% Acrylic FLAT				
	1st Coat	4200 Terminator II	EZPR00 EZ Prime Premium	0046 Hi-Hide All Purpose Primer
	2nd Coat	2000 Duratone	EVSH10 Evershield Flat	W105 Regal Select Flat
	3rd Coat	2000 Duratone	EVSH10 Evershield Flat	W105 Regal Select Flat
Finished Wood Surfaces: 100% Acrylic SEMI-GLOSS				
	1st Coat	4200 Terminator II	EZPR00 EZ Prime Premium	0046 Hi-Hide All Purpose Primer
	2nd Coat	7000 Acriglo Semi-Gloss	EVSH50 Evershield Semi Gloss	W096Regal Soft Gloss
	3rd Coat	7000 Acriglo Semi-Gloss	EVSH50 Evershield Semi Gloss	W096Regal Soft Gloss
Finished Wood Surfaces: 100% Acrylic GLOSS				
	1st Coat	4200 Terminator II	EZPR00 EZ Prime Premium	0046 Hi-Hide All Purpose Primer
	2nd Coat	8500 Carefree Gloss	EVSH60 Evershield Gloss	NA
	3rd Coat	8500 Carefree Gloss	EVSH60 Evershield Gloss	NA

SUBSTRATE	NO. OF COATS	VISTA PAINT	DUNN-EDWARDS	BENJAMIN MOORE
Finished Wood Surfaces: Semi-Transparent Stain				
	1st Coat	Olympic Maximum ST Stain	Okon WPT-3	0638 Arborcoat S/T Stain
	2nd Coat	Olympic Maximum ST Stain	Okon WPT-3	0638 Arborcoat S/T Stain
Iron, Steel, and Galvanized Steel Surfaces: Specified in Section 09 97 13 - High Performance Steel Coatings				
Iron & Steel Substrates: 100% Acrylic GLOSS				
	1st Coat	9600 Protec	BRPR00-1 Block Rust	M04 Acrylic Metal Primer
	2nd Coat	8500 Carefree Gloss	EVSH60 Evershield Gloss	N/A
	3rd Coat	8500 Carefree Gloss	EVSH60 Evershield Gloss	N/A
Iron & Steel Substrates: 100% Acrylic SEMI-GLOSS				
	1st Coat	9600 Protec	BRPR00-1 Block Rust	M04 Acrylic Metal Primer
	2nd Coat	7000 Acriglo Semi-Gloss	EVSH50 Evershield Semi Gloss	402 Regal Soft Gloss
	3rd Coat	7000 Acriglo Semi-Gloss	EVSH50 Evershield Semi Gloss	402 Regal Soft Gloss
Galvanized Steel & Aluminum Substrates: 100% Acrylic GLOSS **Aluminum Surfaces:** 100% Acrylic GLOSS				
	Pretreatment	Krud Kutter Metal Etch	ME01 Etch	Jasco Prep N Prime
	1st Coat	4800 Metal Pro Primer	GAPR00 Galv-Alum Premium	P04 Acrylic Metal Primer
	2nd Coat	8500 Carefree Gloss	EVSH60 Evershield Gloss	N/A
	3rd Coat	8500 Carefree Gloss	EVSH60 Evershield Gloss	N/A
Galvanized Steel & Aluminum Substrates: 100% Acrylic SEMI-GLOSS **Aluminum Surfaces:** 100% Acrylic SEMI-GLOSS				
	Pretreatment	Krud Kutter Metal Etch	ME01 Etch	Jasco Prep N Prime
	1st Coat	4800 Metal Pro Primer	GAPR00 Galv-Alum Premium	P04 Acrylic Metal Primer
	2nd Coat	7000 Acriglo Semi-Gloss	EVSH50 Evershield Semi Gloss	W096 Regal Soft Gloss
	3rd Coat	7000 Acriglo Semi-Gloss	EVSH50 Evershield Semi Gloss	W096 Regal Soft Gloss

SUBSTRATE	NO. OF COATS	VISTA PAINT	DUNN-EDWARDS	BENJAMIN MOORE
Zinc Alloy Surfaces: 100% Acrylic SEMI-GLOSS				
	Pretreatment	Krud Kutter Metal Etch	ME01 Etch	Jasco Prep N Prime
	1st Coat	4800 Metal Pro Primer	GAPR00 Galv-Alum Premium	P04 Acrylic Metal Primer
	2nd Coat	7000 Acriglo Semi-Gloss	EVSH50 Evershield Semi Gloss	W096 Regal Soft Gloss
	3rd Coat	7000 Acriglo Semi-Gloss	EVSH50 Evershield Semi Gloss	W096 Regal Soft Gloss
Fiber Cement Board Surfaces: 100% Acrylic FLAT				
	1st Coat	4600 Uniprime II	ESPR00 Eff-Stop	N023 Fresh Start Primer
	2nd Coat	2000 Duratone	EVSH10 Evershield Flat	W105 Regal Select Flat
	3rd Coat	2000 Duratone	EVSH10 Evershield Flat	W105 Regal Select Flat
Portland Cement Plaster (Stucco) Surfaces (Does not apply to Polymer-Modified Plaster Surfaces): Specified in Section 09 96 13 - Elastomeric Coatings				
Portland Cement Plaster (Stucco) Substrates (Does not apply to Polymer-Modified Plaster Surfaces): 100% Acrylic FLAT				
	1st Coat	4600 Uniprime II	ESPR00 Eff-Stop	023 Fresh Start Primer
	2nd Coat	2000 Duratone	EVSH10 Evershield Flat	400 Regal Select Flat
	3rd Coat	2000 Duratone	EVSH10 Evershield Flat	400 Regal Select Flat
Gypsum Soffit Board Surfaces: 100% Acrylic FLAT				
	1st Coat	4600 Uniprime II	Inter-Kote Premium IKPR00	N023 Fresh Start Primer
	2nd Coat	2000 Duratone	EVSH10 Evershield Flat	W105 Regal Select Flat
	3rd Coat	2000 Duratone	EVSH10 Evershield Flat	W105 Regal Select Flat
INTERIOR SURFACES - LOW VOC				
Concrete Surfaces: 100% Acrylic FLAT				
	1st Coat	4600 Uniprime II	ESPR00 Eff-Stop	N023 Fresh Start Primer
	2nd Coat	7100 Acriglo Flat	SSHL10 Spartashield Flat	547 Regal Select Flat
	3rd Coat	7100 Acriglo Flat	SSHL10 Spartashield Flat	547 Regal Select Flat

SUBSTRATE	NO. OF COATS	VISTA PAINT	DUNN-EDWARDS	BENJAMIN MOORE
Concrete Surfaces: 100% Acrylic EGGSHELL				
	1st Coat	4600 Uniprime II	ESPR00 Eff-Stop Premium	N023 Fresh Start Primer
	2nd Coat	7500 Acriglo Eggshell	SSHL30 Spartashield Eggshell	550 Regal Select Pearl
	3rd Coat	7500 Acriglo Eggshell	SSHL30 Spartashield Eggshell	550 Regal Select Pearl
Concrete Surfaces: 100% Acrylic SEMI-GLOSS				
	1st Coat	4600 Uniprime II	ESPR00 Eff-Stop Premium	N023 Fresh Start Primer
	2nd Coat	7000 Acriglo Semi-Gloss	SSHL50 Spartashield Semi-Gloss	551 Regal Select Semi Gloss
	3rd Coat	7000 Acriglo Semi-Gloss	SSHL50 Spartashield Semi-Gloss	551 Regal Select Semi Gloss
Concrete Surfaces: 100% Acrylic GLOSS				
	1st Coat	4600 Uniprime II	ESPR00 Eff-Stop Premium	N023 Fresh Start Primer
	2nd Coat	8500 Carefree Gloss	EVSH 60 Evershield Gloss	794 Advance High Gloss
	3rd Coat	8500 Carefree Gloss	EVSH 60 Evershield Gloss	794 Advance High Gloss
Concrete Surfaces: 100% Epoxy GLOSS				
	1st Coat	4600 Uniprime II	Rust Oleum Sierra S70/S71 WB	N023 Fresh Start Primer
	2nd Coat	Rust-Oleum Sierra S60 Gloss WB Epoxy	Rust-Oleum Sierra S60 Gloss WB Epoxy	P43 Super Spec HP Gloss Epoxy
CMU Surfaces: 100% Acrylic Flat				
	1st Coat	018 Acrylic Block Filler	SBPR00 Blockfill	160 Latex Block Filler
	2nd Coat	7100 Acriglo Flat	SSHL10 Spartashield Flat	547 Regal Select Flat
	3rd Coat	7100 Acriglo Flat	SSHL10 Spartashield Flat	547 Regal Select Flat
CMU Surfaces: 100% Acrylic EGGSHELL				
	1st Coat	018 Acrylic Block Filler	SBPR00 Blockfill	160 Latex Block Filler
	2nd Coat	7500 Acriglo Eggshell	SSHL30 Spartashield Eggshell	550 Regal Select Pearl
	3rd Coat	7500 Acriglo Eggshell	SSHL30 Spartashield Eggshell	550 Regal Select Pearl

SUBSTRATE	NO. OF COATS	VISTA PAINT	DUNN-EDWARDS	BENJAMIN MOORE
CMU Surfaces: 100% Acrylic SEMI-GLOSS				
	1st Coat	018 Acrylic Block Filler	SBPR00 Blockfill	160 Latex Block Filler
	2nd Coat	7000 Acriglo Semi-Gloss	SSHL50 Spartashield Semi-Gloss	551 Regal Select Semi Gloss
	3rd Coat	7000 Acriglo Semi-Gloss	SSHL50 Spartashield Semi-Gloss	551 Regal Select Semi Gloss
CMU Surfaces: 100% Acrylic GLOSS				
	1st Coat	040 Block Kote	SBPR00 Blockfill	160 Latex Block Filler
	2nd Coat	8500 Carefree Gloss	EVSH 60 Evershield Gloss	794 Advance High Gloss
	3rd Coat	8500 Carefree Gloss	EVSH 60 Evershield Gloss	794 Advance High Gloss
CMU Surfaces: 100% Epoxy GLOSS				
	1st Coat	040 Block Kote	SBPR00 Blockfill	160 Latex Block Filler
	2nd Coat	Rust-Oleum Sierra S60 Gloss WB Epoxy	Rust-Oleum Sierra S60 Gloss WB Epoxy	P43 Super Spec HP Gloss Epoxy
Ferrous Metal Surfaces: 100% Acrylic SEMI-GLOSS				
	1st Coat	9600 Protec	BRPR00 Bloc-Rust	P04 Acrylic Metal Primer
	2nd Coat	7000 Acriglo Semi-Gloss	SSHL50 Spartashield Semi-Gloss	551 Regal Select Semi Gloss
	3rd Coat	7000 Acriglo Semi-Gloss	SSHL50 Spartashield Semi-Gloss	551 Regal Select Semi Gloss
Ferrous Metal Surfaces: 100% Acrylic GLOSS				
	1st Coat	9600 Protec	UGPR00 Ultra-Grip	P04 Acrylic Metal Primer
	2nd Coat	8500 Carefree Gloss	EVSH 60 Evershield Gloss	794 Advance High Gloss
	3rd Coat	8500 Carefree Gloss	EVSH 60 Evershield Gloss	794 Advance High Gloss
Aluminum Surfaces: 100% Acrylic SEMI-GLOSS				
	1st Coat	9600 Protec	BRPR00 Bloc-Rust	P04 Acrylic Metal Primer
	2nd Coat	7000 Acriglo Semi-Gloss	SSHL50 Spartashield Semi-Gloss	551 Regal Select Semi Gloss
	3rd Coat	7000 Acriglo Semi-Gloss	SSHL50 Spartashield Semi-Gloss	551 Regal Select Semi Gloss

SUBSTRATE	NO. OF COATS	VISTA PAINT	DUNN-EDWARDS	BENJAMIN MOORE
Aluminum Surfaces: 100% Acrylic GLOSS				
	1st Coat	9600 Protec	UGPR00 Ultra-Grip	P04 Acrylic Metal Primer
	2nd Coat	8500 Carefree Gloss	EVSH 60 Evershield Gloss	794 Advance High Gloss
	3rd Coat	8500 Carefree Gloss	EVSH 60 Evershield Gloss	794 Advance High Gloss
Stainless Steel, Copper, and Brass Surfaces: 100% Acrylic SEMI-GLOSS				
	1st Coat	9600 Protec	BRPR00 Bloc-Rust	P04 Acrylic Metal Primer
	2nd Coat	7000 Acriglo Semi-Gloss	SSHL50 Spartashield Semi-Gloss	551 Regal Select Semi Gloss
	3rd Coat	7000 Acriglo Semi-Gloss	SSHL50 Spartashield Semi-Gloss	551 Regal Select Semi Gloss
Stainless Steel, Copper, and Brass Surfaces: 100% Acrylic GLOSS				
	1st Coat	9600 Protec	UGPR00 Ultra-Grip	P04 Acrylic Metal Primer
	2nd Coat	8500 Carefree Gloss	EVSH 60 Evershield Gloss	794 Advance High Gloss
	3rd Coat	8500 Carefree Gloss	EVSH 60 Evershield Gloss	794 Advance High Gloss
Rough Sawn Wood Surfaces: Semi-Transparent Stain				
	1st Coat	Olympic S/T Stain	Okon WPT-3	0638 Arborcoat S/T Stain
	2nd Coat	Olympic S/T Stain	Okon WPT-3	0638 Arborcoat S/T Stain
Finished Wood Surfaces: Semi-Transparent Stain				
	1st Coat	VWS0250 Series ST Stain	Old Masters Wood Stain	Moore's S/T WB Stain
Finished Wood Surfaces: Clear Lacquer Finish				
	1st Coat	NRS 1620 Sanding Sealer	LQX 101-0 Sanding Sealer	NRS 1620 Sanding Sealer
	2nd Coat	NRF 1626 Satin Lacquer	LQX 104-0 Satin Lacquer	NRF 1626 Satin Lacquer
	3rd Coat	NRF 1626 Satin Lacquer	LQX 103-0 Satin Lacquer	NRF 1626 Satin Lacquer
Finished Wood Surfaces: Water White Finish (for light-colored stains)				
	1st Coat	NAF 1420 Satin Sealer	LQX 131-0 Sanding Sealer	NAF 1420 Satin Sealer
	2nd Coat	NAF 1422 Satin Lacquer	LQX 132-0 Satin Lacquer	NAF 1426 Satin Lacquer
	3rd Coat	NAF 1422 Satin Lacquer	LQX 132-0 Satin Lacquer	NAF 1426 Satin Lacquer

SUBSTRATE	NO. OF COATS	VISTA PAINT	DUNN-EDWARDS	BENJAMIN MOORE
Finished Wood Surfaces: Clear Varnish Finish FLAT				
	1st Coat	Zenith PKF7501 Flat	Zenith PKF7501 Flat	Zenith PKF7501 Flat
	2nd Coat	Zenith PKF7501 Flat	Zenith PKF7501 Flat	Zenith PKF7501 Flat
	3rd Coat	Zenith PKF7501 Flat	Zenith PKF7501 Flat	Zenith PKF7501 Flat
Finished Wood Surfaces: Clear Varnish Finish SEMI-GLOSS				
	1st Coat	Zenith PKF7501 Flat	Zenith PKF7502 Satin	Zenith PKF7502 Satin
	2nd Coat	Zenith PKF7501 Flat	Zenith PKF7502 Satin	Zenith PKF7502 Satin
	3rd Coat	Zenith PKF7501 Flat	Zenith PKF7502 Satin	Zenith PKF7502 Satin
Finished Wood Surfaces: Clear Varnish Finish GLOSS				
	1st Coat	Zenith PKC7509 Gloss	Zenith PKC7509 Gloss	Zenith PKC7509 Gloss
	2nd Coat	Zenith PKC7509 Gloss	Zenith PKC7509 Gloss	Zenith PKC7509 Gloss
	3rd Coat	Zenith PKC7509 Gloss	Zenith PKC7509 Gloss	Zenith PKC7509 Gloss
Finished Wood Surfaces: 100% Acrylic LOW SHEEN				
	1st Coat	4200 Terminator II	UGPR00 Ultra-Grip	0046 Hi-Hide All Purpose Primer
	2nd Coat	1750 Acriglo Low Sheen	SPMA20 Suprema VS	549 Regal Select Eggshell
	3rd Coat	1750 Acriglo Low Sheen	SPMA20 Suprema VS	549 Regal Select Eggshell
Finished Wood Surfaces: 100% Acrylic SEMI-GLOSS				
	1st Coat	4200 Terminator II	UGPR00 Ultra-Grip	0046 Hi-Hide All Purpose Primer
	2nd Coat	7000 Acriglo Semi-Gloss	SPMA50 Suprema Semi Gloss	551 Regal Select Semi Gloss
	3rd Coat	7000 Acriglo Semi-Gloss	SPMA50 Suprema Semi Gloss	551 Regal Select Semi Gloss
Finished Wood Surfaces: 100% Acrylic Dryfall FLAT				
	1st Coat	DF 12 Dryfall Flat	W 6079 Aquafall Flat	M53 Dryfall Flat
	2nd Coat	DF 12 Dryfall Flat	W 6079 Aquafall Flat	M53 Dryfall Flat
Particle Board, MDF, and Hardboard Surfaces: 100% Acrylic FLAT				
	1st Coat	4000 Uniprime II	UGPR00 Ultra-Grip	N023 Fresh Start Primer
	2nd Coat	7100 Acriglo Flat	SPMA10 Suprema Flat	547 Regal Select Flat
	3rd Coat	7100 Acriglo Flat	SPMA10 Suprema Flat	547 Regal Select Flat

SUBSTRATE	NO. OF COATS	VISTA PAINT	DUNN-EDWARDS	BENJAMIN MOORE
Particle Board, MDF, and Hardboard Surfaces: 100% Acrylic SEMI-GLOSS				
	1st Coat	4000 Uniprime II	UGPR00 Ultra-Grip	N023 Fresh Start Primer
	2nd Coat	7000 Acriglo Semi-Gloss	SPMA50 Suprema Semi Gloss	551 Regal Select Semi Gloss
	3rd Coat	7000 Acriglo Semi-Gloss	SPMA50 Suprema Semi Gloss	551 Regal Select Semi Gloss
Particle Board, MDF, and Hardboard Surfaces: 100% Acrylic GLOSS				
	1st Coat	4000 Uniprime II	UGPR00 Ultra-Grip	N023 Fresh Start Primer
	2nd Coat	8500 Carefree Gloss	EVSH 60 Evershield Gloss	794 Advance High Gloss
	3rd Coat	8500 Carefree Gloss	EVSH 60 Evershield Gloss	794 Advance High Gloss
Portland Cement Plaster Surfaces: 100% Acrylic FLAT				
	1st Coat	4600 Uniprime II	ESPR00 Eff-Stop Premium	N023 Fresh Start Primer
	2nd Coat	7100 Acriglo Flat	SPMA10 Suprema Flat	547 Regal Select Flat
	3rd Coat	7100 Acriglo Flat	SPMA10 Suprema Flat	547 Regal Select Flat
Portland Cement Plaster Surfaces: 100% Acrylic EGGSHELL				
	1st Coat	4600 Uniprime II	ESPR00 Eff-Stop Premium	N023 Fresh Start Primer
	2nd Coat	7500 Acriglo Eggshell	SPMA30 Suprema LS	550 Regal Select Pearl
	3rd Coat	7500 Acriglo Eggshell	SPMA30 Suprema LS	550 Regal Select Pearl

SUBSTRATE	NO. OF COATS	VISTA PAINT	DUNN-EDWARDS	BENJAMIN MOORE
Portland Cement Plaster Surfaces: 100% Acrylic SEMI-GLOSS				
	1st Coat	4600 Uniprime II	ESPR00 Eff-Stop Premium	N023 Fresh Start Primer
	2nd Coat	7000 Acriglo Semi-Gloss	SPMA50 Suprema Semi Gloss	551 Regal Select Semi Gloss
	3rd Coat	7000 Acriglo Semi-Gloss	SPMA50 Suprema Semi Gloss	551 Regal Select Semi Gloss
Portland Cement Plaster Surfaces: 100% Acrylic GLOSS				
	1st Coat	4600 Uniprime II	ESPR00 Eff-Stop Premium	N023 Fresh Start Primer
	2nd Coat	8500 Carefree Gloss	EVSH 60 Evershield Gloss	794 Advance High Gloss
	3rd Coat	8500 Carefree Gloss	EVSH 60 Evershield Gloss	794 Advance High Gloss
Portland Cement Plaster Surfaces: 100% Epoxy GLOSS				
	1st Coat	4600 Uniprime II	Rust-Oleum S70/S71 WB	N023 Fresh Start Primer
	2nd Coat	Rust-Oleum Sierra S60 Gloss WB Epoxy	Rust-Oleum Sierra S60 Gloss WB Epoxy	P43 Super Spec HP Gloss Epoxy
Gypsum Board Surfaces: 100% Acrylic FLAT				
	1st Coat	N/A	VNPR00 Vinylastic Premium	NA
	2nd Coat	7100 Acriglo Flat	SPMA10 Suprema Flat	547 Regal Select Flat
	3rd Coat	7100 Acriglo Flat	SPMA10 Suprema Flat	547 Regal Select Flat
Gypsum Board Surfaces: 100% Acrylic LOW SHEEN				
	1st Coat	5001 Vpro Primer	VNPR00 Vinylastic Premium	N023 Fresh Start Primer
	2nd Coat	5200 Vpro Low Sheen	SPMA20 Suprema VS	549 Regal Select Eggshell
	3rd Coat	5200 Vpro Low Sheen	SPMA20 Suprema VS	549 Regal Select Eggshell
Gypsum Board Surfaces: 100% Acrylic EGGSHELL				
	1st Coat	5001 Vpro Primer	VNPR00 Vinylastic Premium	N023 Fresh Start Primer
	2nd Coat	5300 Vpro Eggshell	SPMA30 Suprema LS	550 Regal Select Pearl
	3rd Coat	5300 Vpro Eggshell	SPMA30 Suprema LS	550 Regal Select Pearl

SUBSTRATE	NO. OF COATS	VISTA PAINT	DUNN-EDWARDS	BENJAMIN MOORE
Gypsum Board Surfaces: 100% Acrylic SEMI-GLOSS				
	1st Coat	5001 Vpro Primer	VNPR00 Vinylastic Premium	N023 Fresh Start Primer
	2nd Coat	5400 Vpro Semi-Gloss	SPMA50 Suprema Semi Gloss	551 Regal Select Semi Gloss
	3rd Coat	5400 Vpro Semi-Gloss	SPMA50 Suprema Semi Gloss	551 Regal Select Semi Gloss
Gypsum Board Surfaces: 100% Acrylic GLOSS				
	1st Coat	5001 Vpro Primer	VNPR00 Vinylastic Premium	N023 Fresh Start Primer
	2nd Coat	8500 Carefree Gloss	EVSH 60 Evershield Gloss	794 Advance High Gloss
	3rd Coat	8501 Carefree Gloss	EVSH 60 Evershield Gloss	794 Advance High Gloss
Gypsum Board Surfaces: 100% Epoxy GLOSS				
	1st Coat	5001 Vpro Primer	Rust-Oleum Sierra S70/S71 WB Epoxy Acrylic Primer	N/A
	2nd Coat	Rust-Oleum Sierra S60 Gloss WB Epoxy	Rust-Oleum Sierra S60 Gloss WB Epoxy	N/A
Acoustical Tile Surfaces: 100% Acrylic FLAT				
	1st Coat	013 Acoustic Kote	W 615 Acoustikote	258 Moore's Ceiling White
	2nd Coat	013 Acoustic Kote	W 615 Acoustikote	258 Moore's Ceiling White
INTERIOR SURFACES - ZERO VOC				
Concrete Surfaces: Acrylic FLAT				
	1st Coat	5001 Vpro Primer	VNSL00 Vinylastic Select Primer	511 Natura Primer
	2nd Coat	5100 Vpro Flat	EVER 10 Everest Flat	512 Natura Flat
	3rd Coat	5100 Vpro Flat	EVER 10 Everest Flat	512 Natura Flat
Concrete Surfaces: 100% Acrylic EGGSHELL				
	1st Coat	5001 Vpro Primer	VNSL00 Vinylastic Select Primer	511 Natura Primer
	2nd Coat	5300 Vpro Eggshell	EVER 30 Everest Eggshell	513 Natura Eggshell
	3rd Coat	5300 Vpro Eggshell	EVER 30 Everest Eggshell	513 Natura Eggshell

SUBSTRATE	NO. OF COATS	VISTA PAINT	DUNN-EDWARDS	BENJAMIN MOORE
Concrete Surfaces: 100% Acrylic SEMI-GLOSS				
	1st Coat	5001 Vpro Primer	VNSL00 Vinylastic Select Primer	511 Natura Primer
	2nd Coat	5400 Vpro Semi-Gloss	EVER 50 Everest Semi Gloss	514 Natura Semi Gloss
	3rd Coat	5400 Vpro Semi-Gloss	EVER 50 Everest Semi Gloss	514 Natura Semi Gloss
CMU Surfaces: Acrylic FLAT				
	1st Coat	040 Block Kote	SBPR00 Blockfill	160 Latex Block Filler
	2nd Coat	5100 Vpro Flat	EVER 10 Everest Flat	512 Natura Flat
	3rd Coat	5100 Vpro Flat	EVER 10 Everest Flat	512 Natura Flat
CMU Surfaces: 100% Acrylic EGGSHELL				
	1st Coat	040 Block Kote	SBPR00 Blockfill	160 Latex Block Filler
	2nd Coat	5300 Vpro Eggshell	EVER 30 Everest Eggshell	513 Natura Eggshell
	3rd Coat	5300 Vpro Eggshell	EVER 30 Everest Eggshell	513 Natura Eggshell
CMU Surfaces: 100% Acrylic SEMI-GLOSS				
	1st Coat	040 Block Kote	SBPR00 Blockfill	160 Latex Block Filler
	2nd Coat	5400 Vpro Semi-Gloss	EVER 50 Everest Semi Gloss	514 Natura Semi Gloss
	3rd Coat	5400 Vpro Semi-Gloss	EVER 50 Everest Semi Gloss	514 Natura Semi Gloss
Iron & Steel Surfaces: 100% Acrylic SEMI-GLOSS				
	1st Coat	9600 Protec	UGPR00 Ultra-Grip	P04 Acrylic Metal Primer
	2nd Coat	5400 Vpro Semi-Gloss	EVER 50 Everest Semi Gloss	514 Natura Semi Gloss
	3rd Coat	5400 Vpro Semi-Gloss	EVER 50 Everest Semi Gloss	514 Natura Semi Gloss

SUBSTRATE	NO. OF COATS	VISTA PAINT	DUNN-EDWARDS	BENJAMIN MOORE
Aluminum Surfaces: 100% Acrylic SEMI-GLOSS				
	1st Coat	4800 Metal Pro Primer	UGPR00 Ultra-Grip	P04 Acrylic Metal Primer
	2nd Coat	5400 Vpro Semi-Gloss	EVER 50 Everest Semi Gloss	514 Natura Semi Gloss
	3rd Coat	5400 Vpro Semi-Gloss	EVER 50 Everest Semi Gloss	514 Natura Semi Gloss
Stainless Steel, Copper, and Brass Surfaces: 100% Acrylic SEMI-GLOSS				
	1st Coat	4800 Metal Pro Primer	UGPR00 Ultra-Grip	P04 Acrylic Metal Primer
	2nd Coat	5400 Vpro Semi-Gloss	EVER 50 Everest Semi Gloss	514 Natura Semi Gloss
	3rd Coat	5400 Vpro Semi-Gloss	EVER 50 Everest Semi Gloss	514 Natura Semi Gloss
Finished Wood Surfaces: 100% Acrylic EGGSHELL				
	1st Coat	5001 Vpro Primer	UGPR00 Ultra-Grip	511 Natura Primer
	2nd Coat	5300 Vpro Eggshell	EVER 30 Everest Eggshell	513 Natura Eggshell
	3rd Coat	5300 Vpro Eggshell	EVER 30 Everest Eggshell	513 Natura Eggshell
Finished Wood Surfaces: 100% Acrylic SEMI-GLOSS				
	1st Coat	5001 Vpro Primer	UGPR00 Ultra-Grip	511 Natura Primer
	2nd Coat	5400 Vpro Semi-Gloss	EVER 50 Everest Semi Gloss	514 Natura Semi Gloss
	3rd Coat	5400 Vpro Semi-Gloss	EVER 50 Everest Semi Gloss	514 Natura Semi Gloss
Particle Board, MDF, and Hardboard Surfaces: Acrylic FLAT				
	1st Coat	5001 Vpro Primer	UGPR00 Ultra-Grip	511 Natura Primer
	2nd Coat	5100 Vpro Flat	EVER 10 Everest Flat	512 Natura Flat
	3rd Coat	5100 Vpro Flat	EVER 10 Everest Flat	512 Natura Flat

SUBSTRATE	NO. OF COATS	VISTA PAINT	DUNN-EDWARDS	BENJAMIN MOORE
Particle Board, MDF, and Hardboard Surfaces: 100% Acrylic SEMI-GLOSS				
	1st Coat	5001 Vpro Primer	UGPR00 Ultra-Grip	511 Natura Primer
	2nd Coat	5400 Vpro Semi-Gloss	EVER 50 Everest Semi Gloss	514 Natura Semi Gloss
	3rd Coat	5400 Vpro Semi-Gloss	EVER 50 Everest Semi Gloss	514 Natura Semi Gloss
Portland Cement Plaster Surfaces: Acrylic FLAT				
	1st Coat	5001 Vpro Primer	VNSL00 Vinylastic Select Primer	511 Natura Primer
	2nd Coat	5100 Vpro Flat	EVER 10 Everest Flat	512 Natura Flat
	3rd Coat	5100 Vpro Flat	EVER 10 Everest Flat	512 Natura Flat
Portland Cement Plaster Surfaces: 100% Acrylic EGGSHELL				
	1st Coat	5001 Vpro Primer	VNSL00 Vinylastic Select Primer	511 Natura Primer
	2nd Coat	5300 Vpro Eggshell	EVER 30 Everest Eggshell	513 Natura Eggshell
	3rd Coat	5300 Vpro Eggshell	EVER 30 Everest Eggshell	513 Natura Eggshell
Portland Cement Plaster Surfaces: 100% Acrylic SEMI-GLOSS				
	1st Coat	5001 Vpro Primer	VNSL00 Vinylastic Select Primer	511 Natura Primer
	2nd Coat	5400 Vpro Semi-Gloss	EVER 50 Everest Semi Gloss	514 Natura Semi Gloss
	3rd Coat	5400 Vpro Semi-Gloss	EVER 50 Everest Semi Gloss	514 Natura Semi Gloss

SUBSTRATE	NO. OF COATS	VISTA PAINT	DUNN-EDWARDS	BENJAMIN MOORE
Gypsum Board Surfaces: Acrylic FLAT				
	1st Coat	Not Required	VNSL00 Vinylastic Select Primer	511 Natura Primer
	2nd Coat	5100 Vpro Flat	EVER 10 Everest Flat	512 Natura Flat
	3rd Coat	5100 Vpro Flat	EVER 10 Everest Flat	512 Natura Flat
Gypsum Board Surfaces: 100% Acrylic EGGSHELL				
	1st Coat	5001 Vpro Primer	VNSL00 Vinylastic Select Primer	511 Natura Primer
	2nd Coat	5300 Vpro Eggshell	EVER 30 Everest Eggshell	513 Natura Eggshell
	3rd Coat	5300 Vpro Eggshell	EVER 30 Everest Eggshell	513 Natura Eggshell
Gypsum Board Surfaces: 100% Acrylic SEMI-GLOSS				
	1st Coat	5001 Vpro Primer	VNSL00 Vinylastic Select Primer	511 Natura Primer
	2nd Coat	5400 Vpro Semi-Gloss	EVER 50 Everest Semi Gloss	514 Natura Semi Gloss
	3rd Coat	5400 Vpro Semi-Gloss	EVER 50 Everest Semi Gloss	514 Natura Semi Gloss
Acoustical Tile Surfaces: Acrylic FLAT				
	1st Coat	5100 Vpro Flat	EVER 10 Everest Flat	512 Natura Flat
	2nd Coat	5100 Vpro Flat	EVER 10 Everest Flat	512 Natura Flat

SECTION 09 96 23
GRAFFITI-RESISTANT COATINGS

PART 1 - GENERAL

1.01 SUMMARY

A. Section Includes:
   1. Penetrating graffiti-resistant coatings,
   2. Painted surface graffiti-resistant coatings,
   3. Supplementary components and accessories normally furnished or necessary for a complete installation, whether or not such items are indicated on the Drawings or included in the Specifications.

1.02 SECTION REQUIREMENTS

A. Performance Requirements:
   1. When compared visually to an untreated sample under the same lighting conditions, graffiti-resistant coatings may not alter the color or sheen of the coated substrate and must be invisible after application and over the life of the substrate. Confirm visual appearance by mockups and adjust products and applications as required.
   2. Coatings must remove 100 percent of all types of paint and graffiti materials from treated surfaces without damaging the coating or the substrate; no evidence of graffiti may remain upon graffiti removal.
   3. Coatings must not show any signs of deterioration or change of appearance during the warranty period after graffiti removal; ghosting, staining, or shadowing is prohibited.
   4. Coatings must withstand at least 120 cleaning cycles over the same area without measurable coating deterioration.
   5. Coatings must not increase substrate dirt pick-up.
   6. Coatings must not require re-application during the warranty period regardless of the number of graffiti taggings.

B. Qualifications:
   1. Installer: Company or individuals must have at least 5 years' experience installing graffiti-resistant coatings for at least 30 previous projects similar to this project in size, material, design, and complexity.
   2. Supervisors: Individuals must have at least 7 years' experience installing graffiti-resistant coatings for at least 30 previous projects similar to this project in size, material, design, and complexity, including at least 2 years' supervisory experience directing and leading graffiti-resistant coating installers.

C. Submittals: Submit product data, samples, and written descriptions of specified qualifications.

D. Mockups: If an *ex-situ* exterior wall integrated mockup is required for this project, then integrate graffiti-resistant coatings into the mockup as part of the work of this specification section.

E. Field Samples: Include *in-situ* mockups as part of the work of this specification section.
   1. The Architect reviews field samples for conformance to the Contract Documents and approves or rejects them as the standard by which subsequent work is evaluated.

2. Revise field samples and repeat reviews, including arranging all revisions and paying all revision costs, until accepted in writing by the Architect. Final acceptance of firestopping is made from field samples.
3. After acceptance, promptly identify and protect field samples for reference until Substantial Completion.
4. Approved field samples may remain part of the work after being identified for future reference.

F. Maintenance Material Submittals:
1. Before Final Completion, deliver to the Owner extra stock materials to replace those worn or damaged as a result of normal occupancy.
2. Furnish one unopened gallon or container for each graffiti-resistant coating type, color, composition, grade, finish, and variety.

G. Manufacturer Warranty: Furnish to the Owner a written manufacturer warranty for products, components, and accessories against all patent and latent defects, and incipient and catastrophic failure for 5 years.

PART 2 - PRODUCTS

2.01 PENETRATING GRAFFITI-RESISTANT COATINGS

A. Description: Non-sacrificial water-based silicone emulsion graffiti protectant.

B. Light-Duty Coatings:
1. Products: “Sure Klean Weather Seal Blok-Guard & Graffiti Control II” manufactured by PROSOCO, Inc., or equal.

a. Coating: “Sure Klean Weather Seal Blok-Guard & Graffiti Control II”, or equal.

b. Cleaner: “Defacer Eraser Graffiti Wipe”, or equal.

C. Medium-Duty Coatings:
1. Description: Non-sacrificial water-based silicone emulsion graffiti protectant.
2. Product: Provide the following manufactured by the Tnemec Co., or equal.

a. Coating: “Series V626 Dur A Pell GS”, or equal.

b. Cleaner: “Series 680 Mark A Way”, or equal.

2.02 HEAVY-DUTY AND PAINTED SURFACE GRAFFITI-RESISTANT COATINGS

A. Description: Non-yellowing aliphatic polyurethane permanent graffiti control system.

B. Product: “PERMASHIELD PREMIUM SYSTEM” manufactured by Monopole, Inc., or equal.
1. Base Coat: “PERMASHIELD BASE” applied to a DFT of 2 to 3 mils per coat; apply 2 coats.
2. Top Coat: “PERMASHIELD PREMIUM” applied to a DFT of 2 to 3 mils per coat; apply 2 coats. Do not apply thicker (may micro-blister).
3. Cleaner: “CITRUS CLEAN SUPER” is the only cleaner manufacturer-recommended product for graffiti removal with “PERMASHIELD PREMIUM SYSTEM”.

C. Requisite Properties:
1. Color: Clear.

2. Specular Gloss (Sheen): Flat.

2.03 ACCESSORIES

A. Mix Water: Provide fresh, clean, clear, potable water from a domestic source. Water must conform to ASTM C 1602 and be free of oil, grease, waxy films, curing compounds, release agents, and other deleterious materials, including salts, acids, alkalis, organic materials, detergents, and other matter that might negatively affect tile quality, durability, or performance.

B. Accessories: Provide accessories and secondary items normally furnished or necessary for a complete installation; or supplied, required, recommended, or accepted by the manufacturer for actual in-service conditions applicable to the project.

PART 3 - EXECUTION

3.01 INSTALLATION REQUIREMENTS

A. General:
1. Ensure proper supervision practices are followed at the project site before the installer begins work and at all times during installation.
2. Verify in-place construction, project conditions, and the work of other specification sections conform to the manufacturer's instructions and other requirements and recommendations.
3. Install graffiti-resistant coatings using materials and methods required, recommended, or accepted by the manufacturer, along with manufacturer-recommended accessories and techniques.
4. Only install graffiti-resistant coatings under conditions that ensure finishes are free from blemishes and defects.
5. Do not exceed the application rates recommended by the manufacturer.
6. Installed graffiti-resistant coatings must be warrantable. Do not install, correct, or replace graffiti-resistant coatings in a manner that results in any warranty or guarantee becoming void.

B. Correction and Repair:
1. Correct deficiencies that do not conform to the Contract Documents.
2. Repair non-conforming, damaged and defective work.
3. Replace soiled graffiti-resistant coatings that cannot be cleaned to the same condition as new.

END OF SECTION

©AWCWEST 18E22 All rights reserved.
TAGDSC, ELMTB, CLSB2010, CLSB2080, CLSB3080

SECTION 09 96 56
EPOXY COATINGS

PART 1 - GENERAL

1.01 SUMMARY

A. Section Includes:
   1. Epoxy coatings.
   2. Surface preparation.
   3. Supplementary components and accessories normally furnished or necessary for a complete installation, whether or not such items are indicated on the Drawings or included in the Specifications.

1.02 SECTION REQUIREMENTS

A. Qualifications:
   1. Installer: Company or individuals must have at least 5 years' experience installing epoxy coatings for at least 30 previous projects similar to this project in size, material, design, and complexity.
   2. Supervisors: Individuals must have at least 7 years' experience installing epoxy coatings for at least 30 previous projects similar to this project in size, material, design, and complexity, including at least 2 years' supervisory experience directing and leading epoxy coating installers.

B. Submittals: Submit product data, samples, and written descriptions of specified qualifications.

C. Maintenance Material Submittals:
   1. Before Final Completion, deliver to the Owner extra stock materials to replace those worn or damaged as a result of normal occupancy.
   2. Furnish one unopened gallon or container for each epoxy coating type, color, composition, grade, finish, and variety.

PART 2 - PRODUCTS

2.01 MANUFACTURERS

A. Manufacturers: Provide products manufactured by one of the following, or equal.

   1. Crossfield Products Corp.
   2. Dur-A-Flex, Inc.
   3. Stonhard.
   4. Tnemec Co.

2.02 EPOXY COATINGS

A. Description: Epoxy coatings applied to interior horizontal and vertical surfaces.

B. Base Coat: Provide the following manufactured by the Tnemec Co., or equal.

1. Concrete Primer: “Series 201 Epoxoprime”, or equal, moisture tolerant epoxy applied to a DFT between 6 and 8 mils.
2. CMU Block Filler: “Series 130 Envirofill”, or equal, waterborne cementitious acrylic applied to a DFT between 2 to 3 mils.
3. Drywall Primer: “Series 287 Enviro-Pox”, or equal, waterborne epoxy-amine adduct applied to a DFT between 2 to 3 mils.

C. Intermediate Coat: “Series 287 Enviro-Pox” manufactured by the Tnemec Co., or equal, waterborne epoxy-amine adduct applied to a DFT between 2 to 3 mils.

D. Top Coat: “Series 297 EnviroGlaze” manufactured by the Tnemec Co., or equal, 2-component, water-based urethane coating applied to a DFT between 2 to 3 mils.

E. Requisite Properties:
1. Concrete and CMU Total Systems Total Thickness: 10- and 15 mils DFT.
2. Drywall System Total Thickness: Between 6- and 9 mils DFT.
3. Color: Indicated on the Drawings or selected by the Architect.

2.03 SURFACE PREPARATION

A. Substrate Testing and Surface Preparation: Perform testing and corrective work, and prepare substrates in conformance with the requirements of Section 09 05 16.

B. Concrete Surface Profiling: Provide ICRI concrete surface profile CSP 3 to CSP 5 (between 10 and 40 mils), unless otherwise explicitly required, recommended, or accepted in writing by the covering manufacturer. Conform to the requirements of Section 09 05 16.

2.04 ACCESSORIES

A. Concrete Repair:
1. Description: Trowel-grade cementitious products used to fill and repair portions of indoor and outdoor concrete flatwork.
2. Product: Provide “ARDEX CP” manufactured by ARDEX Engineered Cements, or equal, unless another type is explicitly indicated or otherwise supplied, required, recommended, or accepted by the manufacturer

B. Trowelable Leveling and Patching Compounds: As specified in Section 03 54 16, or as otherwise supplied, required, recommended, or accepted by the manufacturer for the applications indicated.

C. Moisture Vapor Transmission-Resistant Grout: Polymer modified cementitious osmotic-pressure-resistant grout supplied, required, recommended, accepted by the by manufacturer.

D. Slip-Resistive Additive: Provide glass beads supplied, required, recommended, or accepted by the manufacturer for the actual in-service conditions applicable to the project.

E. Accessories: Provide accessories and secondary items normally furnished or necessary for a complete installation; or supplied, required, recommended, or accepted by the manufacturer for actual in-service conditions applicable to the project.

PART 3 - EXECUTION

3.01 INSTALLATION REQUIREMENTS

A. General:
   1. Ensure proper supervision practices are followed at the project site before the installer begins work and at all times during installation.
   2. Verify in-place construction, project conditions, and the work of other specification sections conform to the manufacturer's instructions and other requirements and recommendations.
   3. Install epoxy coatings using materials and methods required, recommended, or accepted by the manufacturer, along with manufacturer-recommended accessories and techniques.
   4. Only install epoxy coatings under conditions that ensure finishes are free from blemishes and defects.
   5. Do not exceed the application rates recommended by the manufacturer.
   6. Installed epoxy coatings must be warrantable. Do not install, correct, or replace epoxy coatings in a manner that results in any warranty or guarantee becoming void.

B. Correction and Repair:
   1. Correct deficiencies that do not conform to the Contract Documents.
   2. Repair non-conforming, damaged and defective work.
   3. Replace soiled epoxy coatings that cannot be cleaned to the same condition as new.

C. Protection: Protect sealed concrete in place from soiling, deterioration, and damage until Substantial Completion.

END OF SECTION

©AWCWEST 18E22 All rights reserved.
TAGTIS, ELMTC, CLSC2010, CLSC2030, CLSC2050, CLSC2090

SECTION 09 97 13
HIGH-PERFORMANCE STEEL COATINGS

PART 1 - GENERAL

1.01 SUMMARY

A. Section Includes:
   1. Field-applied high-performance steel coatings.
   2. Surface preparation.
   3. Supplementary components and accessories normally furnished or necessary for a complete installation, whether or not such items are indicated on the Drawings or included in the Specifications.

1.02 SECTION REQUIREMENTS

A. Qualifications:
   1. Installer: Company or individuals must have at least 5 years' experience installing high-performance coatings for at least 30 previous projects similar to this project in size, material, design, and complexity.
   2. Supervisors: Individuals must have at least 7 years' experience installing high-performance coatings for at least 30 previous projects similar to this project in size, material, design, and complexity, including at least 2 years' supervisory experience directing and leading high-performance coating installers.

B. Submittals: Submit product data, samples, and written descriptions of specified qualifications.

C. Mockups: If an *ex-situ* exterior wall integrated mockup is required for this project, then integrate high-performance coatings into the mockup as part of the work of this specification section.

D. Maintenance Material Submittals:
   1. Before Final Completion, deliver to the Owner extra stock materials to replace those worn or damaged as a result of normal occupancy.
   2. Furnish one unopened gallon or container for each high-performance coating type, color, composition, grade, finish, and variety.

E. Manufacturer Warranty: Furnish to the Owner a written manufacturer warranty for products, components, and accessories against all patent and latent defects, and incipient and catastrophic failure for 5 years.

PART 2 - PRODUCTS

2.01 MANUFACTURERS

A. Manufacturers: Provide products manufactured by one of the following, or equal.
   1. Carboline Co.
   2. PPG Industries, Inc.
   3. Tnemec Co.

2.02 HIGH PERFORMANCE COATING

A. Spot Primer for Shop-Primed Surfaces: Provide spot primer identical to the Section 05 05 13 shop primer originally used to prime metal surfaces.

B. Spot Primer for Unprimed and Zinc-Rich-Primed Surfaces:
   1. Description: Zinc-rich organic primer conforming to SSPC-Paint 20 Type II (Organic) zinc-rich primers and AISC requirements for Class B surface slip coefficient rating (minimum mean slip coefficient of at least 0.50).
   2. Product: “94-H20 Hydro-Zinc” manufactured by the Tnemec Co., or equal.
   3. Requisite Properties:
      a. Minimum Thickness: Apply to a DFT of between 2.5 and 3.5 mils, when measured in conformance with SSPC paint application standard SSPC-PA2, “*Measurement of Dry Coating Thickness with Magnetic Gages*”.
      b. Colors: Reddish-gray or other standard color furnished by the primer manufacturer.
   4. Performance Requirements:
      a. Zinc Dust Pigment: ASTM D 520 Type III composition classification (maximum 0.002 percent lead).
      b. Dry Film Adhesion: At least 800 psi pull, when tested in conformance with ASTM D 4541.
      c. Humidity Resistance: No blistering, cracking, rusting, or film delamination after at least 1,000 hours exposure, when tested in conformance with ASTM D 4585.
      d. Salt Spray Resistance: No blistering, cracking, rusting, or film delamination; nor more than 1/32-inch rust creep at scribe after at least 10,000 hours exposure, when tested in conformance with ASTM B 117.

C. Epoxy Intermediate Coat:
   1. Product: “Hi-Build Epoxoline II Series L69” manufactured by the Tnemec Co., or equal.
   2. Requisite Properties:
      a. Material: 2-component polyamidoamine epoxy.
      b. Minimum Thickness: Apply to a DFT of between 6.0 and 10.0 mils per coat, when measured in conformance with SSPC paint application standard SSPC-PA2, “*Measurement of Dry Coating Thickness with Magnetic Gages*”.
      c. Color: Match Tnemec color 10BL, “Cornflower”.
      d. Specular Gloss (Sheen): Satin.
   3. Performance Requirements:
      a. Dry Film Adhesion: Minimum rating of 5, when tested in conformance with ASTM D 3359.
      b. Humidity Resistance: No blistering, cracking, rusting or delaminating of film after minimum 1,000 hours exposure, when tested in conformance with ASTM D 4585.
      c. Salt Spray Resistance: No blistering, cracking, rusting, or delaminating of film; and not more than 3/16-inch rust creep at scribe after 10,000 hours exposure, when tested in conformance with ASTM B 117.

D. Hybrid Polyurethane Top Coat:

1. Product: Design is based “UVX Series 750” manufactured by the Tnemec Co., or equal.
2. Requisite Properties:
    a. Material: Two-component polyfunctional hybrid polyurethane.
    b. Minimum Thickness: Apply to a DFT of between 2.5 and 5.0 mils per coat, when measured in conformance with SSPC paint application standard SSPC-PA2, “*Measurement of Dry Coating Thickness with Magnetic Gages*”.
    c. Color: Indicated on the Drawings or selected by the Architect.
    d. Specular Gloss (Sheen): Semi-gloss.
3. Performance Requirements:
    a. Dry Film Adhesion: Minimum rating of 5, when tested in conformance with ASTM D 3359.
    b. Humidity Resistance: No blistering, cracking, rusting or delaminating of film after minimum 1,000 hours exposure, when tested in conformance with ASTM D 4585.
    c. Salt Spray Resistance: No blistering, cracking, rusting, or delaminating of film; and not more than 3/16-inch rust creep at scribe after 10,000 hours exposure, when tested in conformance with ASTM B 117.

2.03 SURFACE PREPARATION

A. Unprimed Iron and Steel Surfaces:
    1. Normally-Dry Interior Exposed-In-Service Conditions: Prepare surfaces in conformance with the primer manufacturer’s application instructions and SSPC-SP-3, “*Power Tool Cleaning*”.
    2. Elsewhere: Prepare surfaces in conformance with primer manufacturer’s application instructions and SSPC-SP-11, “*Power Tool Cleaning to Bare Metal*”.

B. Shop-Primed Iron and Steel Surfaces:
    1. Clean damaged primer areas and prepare damaged primer and adjacent surfaces in conformance with the steel coating manufacturer’s application instructions and SSPC-SP-11 , “*Power Tool Cleaning to Bare Metal*”.
    2. Sand smooth and re-clean.
    3. Spot-prime bare metal surfaces with specified spot-primer applied to a minimum total spot primer DFT of between 2.5 and 3.5 mils.
    4. Overlap undamaged primer areas with spot primer a minimum of at least 2 inches.

C. Unknown or Incompatible Primer: Apply full prime coat of specified spot primer on all surfaces as a tie-coat for subsequent intermediate and top coats.

2.04 ACCESSORIES

A. Accessories: Provide accessories and secondary items normally furnished or necessary for a complete installation; or supplied, required, recommended, or accepted by the manufacturer for actual in-service conditions applicable to the project.

PART 3 - EXECUTION

3.01 INSTALLATION REQUIREMENTS

A. General:
   1. Ensure proper supervision practices are followed at the project site before the installer begins work and at all times during installation.
   2. Verify in-place construction, project conditions, and the work of other specification sections conform to the manufacturer's instructions and other requirements and recommendations.
   3. Install high-performance coatings using materials and methods required, recommended, or accepted by the manufacturer, along with manufacturer-recommended accessories and techniques.
   4. Only install high-performance coatings under conditions that ensure finishes are free from blemishes and defects.
   5. Do not exceed the application rates recommended by the manufacturer.
   6. Installed high-performance coatings must be warrantable. Do not install, correct, or replace high-performance coatings in a manner that results in any warranty or guarantee becoming void.

B. Correction and Repair:
   1. Correct deficiencies that do not conform to the Contract Documents.
   2. Repair non-conforming, damaged and defective work.
   3. Replace soiled high-performance coatings that cannot be cleaned to the same condition as new.

C. Protection: Protect sealed concrete in place from soiling, deterioration, and damage until Substantial Completion.

END OF SECTION

©AWCWEST 18E22 All rights reserved.
TAGDSC, ELMTB, CLSB2010, CLSB2080, CLSB3080

SECTION 09 97 23
PENETRATING CONCRETE FLOOR SEALER

PART 1 - GENERAL

1.01 SUMMARY

A. Section Includes:
   1. Penetrating concrete floor sealer.
   2. Supplementary components and accessories normally furnished or necessary for a complete installation, whether or not such items are indicated on the Drawings or included in the Specifications.

1.02 SECTION REQUIREMENTS

A. Qualifications:
   1. Installer: Company or individuals must have at least 5 years' experience installing concrete sealers for at least 30 previous projects similar to this project in size, material, design, and complexity.
   2. Supervisors: Individuals must have at least 7 years' experience installing concrete sealers for at least 30 previous projects similar to this project in size, material, design, and complexity, including at least 2 years' supervisory experience directing and leading concrete sealer installers.

B. Submittals: Submit product data and written descriptions of specified qualifications.

C. Maintenance Material Submittals:
   1. Before Final Completion, deliver to the Owner extra stock materials to replace those worn or damaged as a result of normal occupancy.
   2. Furnish one unopened gallon or container for each concrete sealer type, color, composition, grade, finish, and variety.

PART 2 - PRODUCTS

2.01 PENETRATING CONCRETE FLOOR SEALER

A. Description: Clear-drying, water-based silane or siloxane water repellent sealer for interior exposed concrete slabs.

B. Penetrating Water Repellent Sealer: "Sure Klean Weather Seal Siloxane WB Concentrate" manufactured by PROSOCO, Inc., or equal.
   1. Porous Surfaces (e.g., Concrete Brick, Concrete Pavers, and Concrete Tile): Dilute to 1 part concentrate to not more than 7 parts water.
   2. Semi-Porous Surfaces (e.g., Cast-in-Place Concrete, Precast Concrete, Clay Brick, Terra Cotta, and Unpolished Sandstone): Dilute to 1 part concentrate to not more than 9 parts water.
   3. Dense Surfaces: Dilute to 1 part concentrate to not more than 14 parts water.

C. Requisite Properties: When compared visually to an untreated sample under the same lighting conditions, concrete sealers may not alter the color or sheen of the coated substrate, and must

be invisible after application and over the life of the substrate. Confirm visual appearance by mockups and adjust products and applications as required.

2.02 ACCESSORIES

A. Mix Water: Provide fresh, clean, clear, potable water from a domestic source. Water must conform to ASTM C 1602 and be free of oil, grease, waxy films, curing compounds, release agents, and other deleterious materials, including salts, acids, alkalis, organic materials, detergents, and other matter that might negatively affect tile quality, durability, or performance.

B. Accessories: Provide accessories and secondary items normally furnished or necessary for a complete installation; or supplied, required, recommended, or accepted by the manufacturer for actual in-service conditions applicable to the project.

PART 3 - EXECUTION

3.01 INSTALLATION REQUIREMENTS

A. General:
   1. Ensure proper supervision practices are followed at the project site before the installer begins work and at all times during installation.
   2. Verify in-place construction, project conditions, and the work of other specification sections conform to the manufacturer’s instructions and other requirements and recommendations.
   3. Install concrete sealers using materials and methods required, recommended, or accepted by the manufacturer, along with manufacturer-recommended accessories and techniques.
   4. Only install concrete sealers under conditions that ensure finishes are free from blemishes and defects.
   5. Do not exceed the application rates recommended by the manufacturer.
   6. Installed concrete sealers must be warrantable. Do not install, correct, or replace concrete sealers in a manner that results in any warranty or guarantee becoming void.

B. Correction and Repair:
   1. Correct deficiencies that do not conform to the Contract Documents.
   2. Repair non-conforming, damaged and defective work.
   3. Replace soiled concrete sealers that cannot be cleaned to the same condition as new.

C. Protection:Protect sealed concrete in place from soiling, deterioration, and damage until Substantial Completion.

END OF SECTION

©AWCWEST 18E22 All rights reserved.
RSTLNE, TAGTIS, ELMTC, CLSC2030, CLSC2090

DIVISION 10

SPECIALTIES

SECTION 10 14 13
REGULATORY SIGNAGE

PART 1 - GENERAL

1.1 SUMMARY

A. Section Includes:
   1. Restroom doors signs.
   2. Egress stairway door signs.
   3. Accessible entrance and route signs.
   4. Supplementary components and accessories normally furnished or necessary for a complete installation, whether or not such items are indicated on the Drawings or included in the Specifications.

1.2 SECTION REQUIREMENTS

A. Submittals: Submit product data, shop drawings and samples.

PART 2 - PRODUCTS

2.1 PHOTOPOLYMER PANEL SIGNS

A. Description: Single-piece photopolymer panel permanent identification signs consisting of moisture resistant non-glare photopolymer bonded to sign base material.

B. Manufacturer: Provide photopolymer products manufactured by Nova Polymers, Inc., or equal.

C. Fabricators: Provide signs fabricated by one of the following, or equal.
   1. Neiman & Co.
   2. Signtech Inc.

D. Materials:
   1. Photopolymer Layer: 0.040-inch acrylic photopolymer.
   2. Base Material:
      a. Interior Locations: 0.120-inch phenolic base.
      b. Exterior Locations: Exterior grade photopolymer applied to a 0.120-inch phenolic base.

E. Requisite Properties:
   1. Overall Panel Thickness: Between 1/8- and 1/4-inch.
   2. Colors: Indicated in the Architectural Signage Schedule on the Drawings.
   3. Finish: Furnish non-glare finish.
   4. Edge Condition: Square cut.
   5. Corner Condition: Square.
   6. Mounting: Indicated on the Drawings.
   7. Copy: Indicated in the Architectural Signage Schedule on the Drawings.
      a. Letter spacing must conform to standards shown and kerned optically to the acceptance of the Architect.
      b. Lines of copy must be straight and parallel to the sign format, unless otherwise indicated.

c. Edges of letters, numbers, and symbols must be smooth and continuous, with straight and curved portions reproducing the original forms exactly, with corners sharp and true.
d. All forms must be free from ticks, line waiver, discontinuous curves, and other imperfections.

8. Font: Indicated in the Architectural Signage Schedule on the Drawings.

2.2 INSTALLATION MATERIALS

A. Fasteners: Non-removable mechanical fasteners and anchors suitable for secure attachment to substrate and placed through predrilled holes as recommended in writing by the sign manufacturer.
1. Exposed Fasteners: Exposed fasteners are permitted only where specifically stated in the drawings and must be stainless steel painted or finished to match adjacent surfaces, unless otherwise indicated.
2. Concealed Fasteners: Fabricate from metals that are not corrosive to the sign material and mounting surface.

B. Tape: “VHB Tape” manufactured by 3M, or equal.

C. Adhesive: “732 Multi-Purpose Sealant Clear” manufactured by Dow Corning Corp., or equal.

2.3 ACCESSORIES

A. Plastic Cement: “WELD-ON 4” manufactured by IPC Corp., or equal.

B. Other Accessories: Provide accessories and secondary items normally furnished or necessary for a complete installation; or supplied, required, recommended, or accepted by the manufacturer for actual in-service conditions applicable to the project.

PART 3 - EXECUTION

3.1 INSTALLATION REQUIREMENTS

A. General:
1. Ensure proper supervision practices are followed at the project site before the installer begins work and at all times during installation.
2. Verify in-place supporting and adjacent construction conforms to the manufacturer’s requirements or recommendations and satisfies all other conditions that might affect the quality of installation or the durability, appearance, or performance of installed signs and adjacent items.
3. Install signs using materials and methods required, recommended, or accepted by the manufacturer, along with manufacturer-recommended accessories and techniques.
4. Set items true to line, to required levels and lines, and plumb, level, and square, without warp or rack, with flush well-fitted joints, and in alignment with adjacent construction
5. Securely attach signs in place to supporting construction.
6. Installed signs must be warrantable. Do not install, correct, or replace signs in a manner that results in any warranty or guarantee becoming void.

B. Installation Tolerances: Install signs to an allowable tolerance variation of not more than 1/4-inch from true position and not more than 1/8-inch and from plumb, level, and alignment.

C. Correction and Repair:
1. Correct deficiencies that do not conform to the Contract Documents.

2. Repair non-conforming, damaged and defective work.
3. Replace soiled items that cannot be cleaned to the same condition as new.

D. Protection:
1. Protect installed signs in place from soiling, deterioration, and damage until Substantial Completion.
2. Remove protection when it's no longer needed and before Substantial Completion.

END OF SECTION

©AWCWEST 18E22 All rights reserved.

SECTION 10 21 13
TOILET COMPARTMENTS

PART 1 - GENERAL

1.1 SUMMARY

A. Section Includes:
   1. Solid phenolic core toilet compartments.
   2. Supplementary components and accessories normally furnished or necessary for a complete installation, whether or not such items are indicated on the Drawings or included in the Specifications.

1.2 SECTION REQUIREMENTS

A. Submittals: Submit product data, shop drawings, and samples.

PART 2 - PRODUCTS

2.1 MANUFACTURERS

A. Manufacturers: Provide products manufactured by one of the following, or equal.
   1. Bobrick Washroom Equipment, Inc.
   2. Bradley Corp.
   3. General Partitions Manufacturing Corp.
   4. Scranton Products.

2.2 SOLID PHENOLIC CORE TOILET COMPARTMENTS

A. Description: Gap-free solid phenolic core partitions and screens.

B. Products: “1082G Series DuraLine” compartments and “1085 Series DuraLine” urinal screens manufactured by Bobrick Washroom Equipment, Inc., or equal.

C. Requisite Properties:
   1. Partition Style: Overhead-braced.
   2. Urinal Screen Style: Wall-mounted.
   3. Panels and Screens Thickness: 1/2-inch thick.
   4. Pilasters and Doors Thickness: 3/4-inch.
   5. Headrail: Extruded anodized aluminum with satin finish.
   6. Color: Indicated on the Drawings.
   7. Finish: Machined smooth, 15-degree beveled edges.

2.3 HARDWARE

A. General:

1. Provide stainless steel 18-8, Type 304 No. 4 finish hardware. Chrome-plated brass, chrome-plated zinc alloy and aluminum hardware are prohibited.
2. Provide manufacturer’s standard vandal-resistant option for all hardware.

B. Hinges: Provide stainless steel wraparound gravity hinges, through-bolted to pilasters, and that allow for fully-adjustable door closing position.

C. Latches: Provide stainless steel surface-mounted slide latch and keeper.

D. Door Pull: Provide stainless steel pulls at out-swinging doors mounted in compliance with the accessibility requirements of the authorities having jurisdiction. Provide pulls at both sides of compartment doors indicated to be accessible.

E. Coat Hook/Bumper: Provide manufacturer's standard combination hook and rubber-tipped bumper, mounted on the water closet side of each compartment door, and sized to prevent door from hitting compartment-mounted accessories.

2.4 ACCESSORIES

A. Heat-Sink Strips: Provide aluminum heat-sink strips fastened to exposed bottom edges of doors and panels with vandal-proof fasteners.

B. Brackets: Provide stainless steel continuous brackets.

C. Pilaster Shoes: Provide 3-inch high stainless steel shoes secured by concealed fasteners.

D. Mounting Brackets: Stainless steel, mounted inside compartment. Mounting brackets exposed on the exterior of the compartment are prohibited. Wall mounted urinal screen brackets must be at least 0.1250-inch thick (USSG 11) double thickness.

E. Fasteners: Provide tamper-resistant stainless steel fasteners for component connections, for attaching exposed hardware and for fastening compartments to walls.

F. Fastenings: Provide backings, inserts, loose connection hardware, fasteners, anchors, attachments, connectors, and other items supplied, required, recommended, or accepted by the manufacturer for actual in-service conditions applicable to the project.

G. Other Accessories: Provide accessories and secondary items normally furnished or necessary for a complete installation; or supplied, required, recommended, or accepted by the manufacturer for actual in-service conditions applicable to the project.

PART 3 - EXECUTION

3.1 INSTALLATION REQUIREMENTS

A. General:
1. Ensure proper supervision practices are followed at the project site before the installer begins work and at all times during installation.
2. Verify in-place supporting and adjacent construction conforms to the manufacturer’s requirements or recommendations and satisfies all other conditions that might affect the quality of installation or the durability, appearance, or performance of installed toilet compartments and adjacent items.

3. Install toilet compartments using materials and methods required, recommended, or accepted by the manufacturer, along with manufacturer-recommended accessories and techniques.
4. Set items true to line, to required levels and lines, and plumb, level, and square, without warp or rack, with flush well-fitted joints, and in alignment with adjacent construction
5. Securely attach toilet compartments in place to supporting construction.
6. Installed toilet compartments must be warrantable. Do not install, correct, or replace toilet compartments in a manner that results in any warranty or guarantee becoming void.

B. Special Techniques:
1. Set pilasters with anchorages having at least 2-inch penetration into structural floor, unless otherwise recommended by partition manufacturer.
   a. Level, plumb, and tighten installation with devices furnished.
   b. Hang doors and adjust so that tops of doors are level with tops of pilasters when doors are in closed position.
2. Install hardware as recommended by manufacturer. Conceal evidence of drilling in finished work.

C. Installation Tolerances: Install toilet compartments to an allowable tolerance variation of not more than 1/4-inch from true position and not more than 1/8-inch and from plumb, level, and alignment.

D. Correction and Repair:
1. Correct deficiencies that do not conform to the Contract Documents.
2. Repair non-conforming, damaged and defective work.
3. Replace soiled items that cannot be cleaned to the same condition as new.

E. Protection:
1. Protect installed toilet compartments in place from soiling, deterioration, and damage until Substantial Completion.
2. Remove protection when it’s no longer needed and before Substantial Completion.

END OF SECTION

©AWCWEST 18E22 All rights reserved.

SECTION 10 21 33
CUBICLE CURTAINS AND TRACK

PART 1 - GENERAL

1.01 SUMMARY

A. Section Includes:
   1. Cubicle curtains.
   2. Curtain tracks.
   3. Curtain carriers.
   4. Supplementary components and accessories normally furnished or necessary for a complete installation, whether or not such items are indicated on the Drawings or included in the Specifications.

1.02 SECTION REQUIREMENTS

A. Regulatory Requirements:
   1. Curtain Fabric: Fabric must be identified, with appropriate markings of the applicable testing and inspecting agency, as having required flame-resistant properties.

B. Submittals: Submit product data, shop drawings, and samples.

C. Maintenance Material Submittals: Deliver extra stock materials to the Architect before Final Completion.
   1. Curtain Carriers and Track End Caps: Furnish full-size units equal to 3 percent of the amount installed for each size and type indicated.
   2. Curtains: Full-size units from the same manufacturer dye lot, or from consecutive lots, matching those installed, equal to 10 percent of amount installed for each size indicated, but no fewer than 2 units.
   3. Properly package and identify extra stock materials for use for future maintenance, repair, or replacement.

PART 2 - PRODUCTS

2.01 CUBICLE CURTAINS

A. Description: Contract textiles manufactured for privacy applications and fabricated into curtains consisting of a textile privacy panel with a mesh top.

B. Manufacturers: Provide products manufactured by one of the following, or equal.
   1. Carnegie Fabrics, LLC.
   2. KnollTextiles.
   3. Luna Textiles.
   4. Maharam.

C. Product: Indicated on the Drawings or selected by the Architect, or equal.

D. Requisite Properties:
   1. Collection: Indicated on the Drawings or selected by the Architect, or equal.

2. Color: Indicated on the Drawings or selected by the Architect.
3. Pattern: Indicated on the Drawings or selected by the Architect.
4. Overall Curtain Width: Equal to track length from which the curtain is hung, plus 10 percent or at least 12 inches for added fullness, whichever is greater.
5. Overall Curtain Length: Equal to the floor-to-ceiling height, less 32 inches (minus 12 inches from finished floor at the bottom, and minus 20 inches from finished ceiling at the top).
6. Privacy Panel:

    a. Material: Fabric woven from 100-percent flame-retardant and stain-resistant polyester yarn.

    b. Minimum Fabric Weight: At least 20 ounces per square yard.

    c. Minimum Overall Fabric Width: At least 54 inches wide.

    d. Top Hem: Between one and 1-1/2 inches wide, triple thickness, reinforced with an integral web, and double lock stitched.

    e. Bottom Hem: Between one and 1-1/2 inches wide, double thickness, and double lock stitched.

    f. Side Hems: Between 1/2- and 1-1/4 inches wide, with double turned edges, and single lock stitched.

    g. Vertical Seams: At least 1/2-inch wide, double turned edges, and double stitched.
7. Mesh Top:

    a. Material: Provide No. 50, 20-inch wide, 1/2-inch hole flame-resistant nylon mesh.

    b. Top Hem: At least one inch and not more than 1-1/2 inches wide, triple thickness, reinforced with integral web, and double lock stitched. Double lock stitch bottom of mesh directly to 1/2-inch triple thickness, top hem of curtain fabric.

    c. Grommets (Client wants snaps – Architect to send cut sheets): Provide 2-piece, rolled-edge, rustproof, nickel-plated brass or aluminum grommets at the top hem, and spaced not more than 6 inches on center.

E. Performance Requirements: Curtain fabrics must be
1. launderable to a temperature of at least 160 deg. F;
2. flame-resistant and identical to those fabrics having passed the requirements of NFPA publication NFPA 701, “Standard Methods of Fire Tests for Flame Propagation of Textiles and Films”, when tested by a qualified testing and inspection agency acceptable to the AHJ; and
3. identified with the appropriate markings of the applicable qualified testing and inspection agency.

F. Accessories:
1. Tiebacks: Provide flame-resistant, woven polyester straps with self-adhering aluminum wall attachment plates.
2. Other Accessories: Provide other accessories and secondary items normally furnished or necessary for a complete installation; or supplied, required, recommended, or accepted by the manufacturer for actual in-service conditions applicable to the project.

2.02 CURTAIN TRACKS

A. Description: Surface-mounted extruded-aluminum cubicle curtain track systems.

B. Products: “Narrowline Aluminum Track” manufactured by Construction Specialties, Inc., or equal.

C. Requisite Properties:
   1. Curved Track: Provide curved track factory-fabricated in one continuous “L” shape with at least 12-inch radius bends.
   2. Finish: Manufacturer’s standard clear anodized finish.

D. Components: Provide splices, end caps, connectors, removable end stops, coupling and joining sleeves, wall flanges, brackets, ceiling clips, and other accessories as supplied, required, recommended, approved, or accepted by the curtain track manufacturer.

E. Accessories:
   1. Fasteners: Provide exposed and concealed stainless steel fasteners.
   2. Other Accessories: Provide accessories and secondary items normally furnished or necessary for a complete installation; or supplied, required, recommended, or accepted by the manufacturer for actual in-service conditions applicable to the project.

2.03 CURTAIN CARRIERS

A. Description:
   1. Curtain Carriers: 2-wheel carriers, with rollers and axles manufactured from virgin nylon, and nickel-plated brass or steel bead chains and hard aluminum hooks; provide at least 2.2 rollers per linear foot of track.

B. Manufacturers: Provide products manufactured by one of the following, or equal.
   1. Capital Cubicle.
   2. Construction Specialties, Inc.
   3. Cubicle Curtain Factory, Inc.

2.04 INSTALLATION

A. General:
   1. Use materials and methods required, recommended, or accepted by the manufacturer, along with manufacturer-recommended accessories and techniques.
   2. Set items plumb, level, and square, without panel warp or rack, with flush well-fitted joints, and in alignment with adjacent construction
   3. Provide surface-mounted track fabricated from one continuous length for tracks up to 20 feet in length.

B. Special Techniques:
   1. Surface Track Mounting: Fasten surface-mounted tracks at intervals of not less than 24 inches.
      a. Fasten support at each splice and tangent point of each corner.
      b. Center fasteners in track to ensure unencumbered carrier operation.
      c. Mechanically fasten to suspended ceiling grid with screws.
   2. Suspended Track Mounting: Install track with suspended supports at intervals of not more than 48 inches. Fasten support at each splice and tangent point of each corner. Secure ends of track to wall with flanged fittings or brackets.
   3. Track Accessories: Install splices, end caps, connectors, end stops, coupling and joining sleeves, and other accessories as required for a secure and operational installation.

4. Curtain Carriers: Provide curtain carriers adequate for 6-inch spacing along full length of curtain plus an additional carrier.
5. Curtains: Hang curtains on each curtain track.
6. Other Accessories: Provide accessories and secondary items normally furnished or necessary for a complete installation; or supplied, required, recommended, or accepted by the manufacturer for actual in-service conditions applicable to the project.

PART 3 - EXECUTION

3.01 INSTALLATION REQUIREMENTS

A. General:
1. Ensure proper supervision practices are followed at the project site before the installer begins work and at all times during installation.
2. Verify in-place supporting and adjacent construction conforms to the manufacturer's requirements or recommendations and satisfies all other conditions that might affect the quality of installation or the durability, appearance, or performance of installed curtains and tracks and adjacent items.
3. Install curtains and tracks using materials and methods required, recommended, or accepted by the manufacturer, along with manufacturer-recommended accessories and techniques.
4. Set items true to line, to required levels and lines, and plumb, level, and square, without warp or rack, with flush well-fitted joints, and in alignment with adjacent construction
5. Securely attach curtains and tracks in place to supporting construction.
6. Installed curtains and tracks must be warrantable. Do not install, correct, or replace curtains and tracks in a manner that results in any warranty or guarantee becoming void.

B. Installation Tolerances: Install curtains and tracksto an allowable tolerance variation of not more than 1/4-inch from true position and not more than 1/8-inch and from plumb, level, and alignment.

C. Correction and Repair:
1. Correct deficiencies that do not conform to the Contract Documents.
2. Repair non-conforming, damaged and defective work.
3. Replace soiled items that cannot be cleaned to the same condition as new.

D. Protection:
1. Protect installed curtains and tracks in place from soiling, deterioration, and damage until Substantial Completion.
2. Remove protection when it's no longer needed and before Substantial Completion.

END OF SECTION

©AWCWEST 18E22 All rights reserved.
RSTLNE, TAGTIS, TAGFFE, ELMTC, CLSC1090

SECTION 10 28 13
COMMERCIAL TOILET ACCESSORIES

PART 1 - GENERAL

1.1 SUMMARY

A. Section Includes:
   1. Commercial toilet accessories.
   2. Supplementary components and accessories normally furnished or necessary for a complete installation, whether or not such items are indicated on the Drawings or included in the Specifications.

1.2 SECTION REQUIREMENTS

A. Submittals: Submit product data and shop drawings.

PART 2 - PRODUCTS

2.1 MANUFACTURERS

A. Manufacturers: Provide products manufactured by one of the following, or equal.
   1. Bobrick Washroom Equipment, Inc.
   2. Bradley Corp.

2.2 COMMERCIAL TOILET ACCESSORIES

A. Products: Indicated in the Accessory Schedule on the Drawings, Sheet GO.40, or equal.

B. Materials:
   1. Stainless-Steel Sheet: ASTM A 666 (annealed and tempered) Type 304 tension leveled to a flatness of 5 I-units or less.
   2. Mirrored Glass: ASTM C 1503, Q-1 Mirror Select Quality.

2.3 ACCESSORIES

A. Pipe Guards:
   1. Description: Insulating antimicrobial, molded plastic, white pipe covering for supply and drain piping assemblies that prevent direct contact with and burns from piping; allow service access without removing coverings.
   2. Manufacturers: Provide products manufactured by one of the following, or equal.
      a. Plumberex Specialty Products, Inc.
      b. IPS Corp.

B. Fastenings: Provide backings, inserts, loose connection hardware, fasteners, anchors, attachments, connectors, and other items supplied, required, recommended, or accepted by the manufacturer for actual in-service conditions applicable to the project.

C. Other Accessories: Provide accessories and secondary items normally furnished or necessary for a complete installation; or supplied, required, recommended, or accepted by the manufacturer for actual in-service conditions applicable to the project.

PART 3 - EXECUTION

3.1 INSTALLATION REQUIREMENTS

A. General:
   1. Ensure proper supervision practices are followed at the project site before the installer begins work and at all times during installation.
   2. Verify in-place supporting and adjacent construction conforms to the manufacturer's requirements or recommendations and satisfies all other conditions that might affect the quality of installation or the durability, appearance, or performance of installed toilet accessories and adjacent items.
   3. Install toilet accessories using materials and methods required, recommended, or accepted by the manufacturer, along with manufacturer-recommended accessories and techniques.
   4. Set items true to line, to required levels and lines, and plumb, level, and square, without warp or rack, with flush well-fitted joints, and in alignment with adjacent construction
   5. Securely attach toilet accessories in place to supporting construction.
   6. Installed toilet accessories must be warrantable. Do not install, correct, or replace toilet accessories in a manner that results in any warranty or guarantee becoming void.

B. Installation Tolerances: Install toilet accessories to an allowable tolerance variation of not more than 1/4-inch from true position and not more than 1/8-inch and from plumb, level, and alignment.

C. Correction and Repair:
   1. Correct deficiencies that do not conform to the Contract Documents.
   2. Repair non-conforming, damaged and defective work.
   3. Replace soiled items that cannot be cleaned to the same condition as new.

D. Protection:
   1. Protect installed toilet accessories in place from soiling, deterioration, and damage until Substantial Completion.
   2. Remove protection when it's no longer needed and before Substantial Completion.

END OF SECTION

©AWCWEST 18E22 All rights reserved.

SECTION 10 28 14
COMMERCIAL SHOWER ACCESSORIES

PART 1 - GENERAL

1.01 SUMMARY

A. Section Includes:
   1. Shower curtains.
   2. Shower curtain rods.
   3. Shower curtain hooks.
   4. Shower seats.
   5. Supplementary components and accessories normally furnished or necessary for a complete installation, whether or not such items are indicated on the Drawings or included in the Specifications.

1.02 SECTION REQUIREMENTS

A. Submittals: Submit product data and shop drawings.

PART 2 - PRODUCTS

2.01 MANUFACTURERS

A. Manufacturers: Provide products manufactured by one of the following, or equal.
   1. Bobrick Washroom Equipment, Inc.
   2. Bradley Corp.

2.02 SHOWER CURTAINS

A. Product: “Model B-204” manufactured by Bobrick Washroom Equipment, Inc., or equal.

B. Requisite Properties:
   1. Overall Curtain Width: Equal to the curtain rod length plus either 10 percent or at least 12 inches, whichever is greater, for added fullness.
   2. Overall Curtain Length: 72 inches.
   3. Material: Matte white vinyl with antibacterial and flame-retardant agents.
   4. Minimum Fabric Thickness: At least 0.008-inch thick.
   5. Hems: Bottom and sides must be hemmed.
   6. Grommets: Nickel-plated brass grommets spaced every 6 inches on center along the top of curtain.

2.03 SHOWER CURTAIN RODS

A. Product: “Model B-6047” manufactured by Bobrick Washroom Equipment, Inc., or equal.

B. Requisite Properties:
   1. Curtain Rod: 18-8 S, Type 304, stainless steel with satin finish.

2. Flanges: Same material and finish as curtain rod; drawn, one-piece seamless construction (heavy- and extra-heavy-duty rods).
3. Curtain Rod and Flange Thickness: At least 0.050-inch BMT (USSG 18).
4. Curtain Rod Outside Diameter: 1-1/4 inches.
5. Mounting: Concealed aluminum brackets.
6. Backing: Specified in Section 05 40 00.

2.04 SHOWER CURTAIN HOOKS

A. Product: “Part No. 204-1” shower curtain hooks manufactured by Bobrick Washroom Equipment, Inc., or equal.

B. Material: 0.09-inch diameter stainless steel Type 304.

2.05 STANDARD SHOWER SEATS

A. Reversible Folding Shower Seat:
1. Product: “Model B-5181” manufactured by Bobrick Washroom Equipment, Inc., or equal.
2. Requisite Properties:

a. Seat: One-piece, 1/2-inch thick solid phenolic core seat with matte-finish melamine surfaces and black phenolic resin core.

b. Support: Stainless steel with self-locking mechanism.

2.06 ACCESSORIES

A. Fastenings: Provide backings, inserts, loose connection hardware, fasteners, anchors, attachments, connectors, and other items supplied, required, recommended, or accepted by the manufacturer for actual in-service conditions applicable to the project.

B. Other Accessories: Provide accessories and secondary items normally furnished or necessary for a complete installation; or supplied, required, recommended, or accepted by the manufacturer for actual in-service conditions applicable to the project.

PART 3 - EXECUTION

3.01 INSTALLATION REQUIREMENTS

A. General:
1. Ensure proper supervision practices are followed at the project site before the installer begins work and at all times during installation.
2. Verify in-place supporting and adjacent construction conforms to the manufacturer’s requirements or recommendations and satisfies all other conditions that might affect the quality of installation or the durability, appearance, or performance of installed shower accessories and adjacent items.
3. Install shower accessories using materials and methods required, recommended, or accepted by the manufacturer, along with manufacturer-recommended accessories and techniques.
4. Set items true to line, to required levels and lines, and plumb, level, and square, without warp or rack, with flush well-fitted joints, and in alignment with adjacent construction

5. Securely attach shower accessories in place to supporting construction.
6. Installed shower accessories must be warrantable. Do not install, correct, or replace shower accessories in a manner that results in any warranty or guarantee becoming void.

B. Installation Tolerances: Install shower accessories to an allowable tolerance variation of not more than 1/4-inch from true position and not more than 1/8-inch and from plumb, level, and alignment.

C. Correction and Repair:
1. Correct deficiencies that do not conform to the Contract Documents.
2. Repair non-conforming, damaged and defective work.
3. Replace soiled items that cannot be cleaned to the same condition as new.

D. Protection:
1. Protect installed shower accessories in place from soiling, deterioration, and damage until Substantial Completion.
2. Remove protection when it's no longer needed and before Substantial Completion.

END OF SECTION

©AWCWEST 18E22 All rights reserved.
RSTLNE, TAGTIS, TAGFFE, ELMTC, CLSC1090

SECTION 10 41 16
EMERGENCY KEY VAULTS

PART 1 - GENERAL

1.01 SUMMARY

A. Section Includes:
   1. Commercial key vaults.
   2. Supplementary components and accessories normally furnished or necessary for a complete installation, whether or not such items are indicated on the Drawings or included in the Specifications.

1.02 SECTION REQUIREMENTS

A. Submittals: Submit product data and shop drawings.

PART 2 - PRODUCTS

2.01 MANUFACTURERS

A. Manufacturers: Provide products manufactured by one of the following, or equal.
   1. Knox Co.
   2. UTC Fire & Security Co.

2.02 COMMERCIAL KEY VAULT

A. Description: Vault-like hinged door key boxes for allowing fire department access to properties when responding to emergencies

B. Products: “3200 Series KNOX-BOX" manufactured by Knox Co., or equal.

C. Requisite Properties:
   1. Model: Lift-off door model with alarm tamper switches.
   2. Capacity: Up to 10 keys.
   3. Mounting: Surface and Recessed mounted, as indicated.
   4. Size: 7 inches high by 7 inches wide.
   5. Surface Mount Body: 5inches high by 4 inches wide by 3-3/4 inches deep.
   6. Recessed Mount Flange: 7 inches high by 7 inches wide.
   7. Rough in Dimensions: 6-1/2 inches high by 6-1/2 inches wide by 5 inches deep.
   8. Construction: 1/4-inch steel plate housing; 1/2-inch steel plate door with interior gasket seal and stainless steel door hinge.
   9. Lock: UL listed double-action rotating tumblers and hardened steel pins accessed by a biased cut key.
   10. Color: Black.
   11. Mounting Height: Indicated on the Drawings.

2.03 ACCESSORIES

A. Recessed Mounting Kit: Provide manufacturer's standard shell housing and mounting hardware for casting into concrete or setting into masonry construction.

B. Other Accessories: Provide other accessories and secondary items normally furnished or necessary for a complete installation; or supplied, required, recommended, or accepted by the manufacturer for actual in-service conditions applicable to the project.

PART 3 - EXECUTION

3.01 INSTALLATION REQUIREMENTS

A. General:
   1. Ensure proper supervision practices are followed at the project site before the installer begins work and at all times during installation.
   2. Verify in-place supporting and adjacent construction conforms to the manufacturer’s requirements or recommendations and satisfies all other conditions that might affect the quality of installation or the durability, appearance, or performance of installed key vaults and adjacent items.
   3. Install key vaults using materials and methods required, recommended, or accepted by the manufacturer, along with manufacturer-recommended accessories and techniques.
   4. Set items true to line, to required levels and lines, and plumb, level, and square, without warp or rack, with flush well-fitted joints, and in alignment with adjacent construction
   5. Securely attach key vaults in place to supporting construction.
   6. Installed key vaults must be warrantable. Do not install, correct, or replace key vaults in a manner that results in any warranty or guarantee becoming void.

B. Installation Tolerances: Install key vaultsto an allowable tolerance variation of not more than 1/4-inch from true position and not more than 1/8-inch and from plumb, level, and alignment.

C. Correction and Repair:
   1. Correct deficiencies that do not conform to the Contract Documents.
   2. Repair non-conforming, damaged and defective work.
   3. Replace soiled items that cannot be cleaned to the same condition as new.

D. Protection:
   1. Protect installed key vaults in place from soiling, deterioration, and damage until Substantial Completion.
   2. Remove protection when it’s no longer needed and before Substantial Completion.

END OF SECTION

©AWCWEST 18E22 All rights reserved.
RSTLNE, TAGTIS, TAGFFE, ELMTC, CLSC1090

SECTION 10 51 29
SOLID PHENOLIC CORE LOCKERS

PART 1 - GENERAL

1.01 SUMMARY

A. Section Includes:
   1. SPC lockers.
   2. Supplementary components and accessories normally furnished or necessary for a complete installation, whether or not such items are indicated on the Drawings or included in the Specifications.

1.02 SECTION REQUIREMENTS

A. Submittals: Submit product data and shop drawings.

PART 2 - PRODUCTS

2.01 PHENOLIC LOCKERS

A. Description: Solid phenolic-core panel material with melamine facing on both sides fused to substrate during panel manufacture (not separately laminated), and with eased and polished edges.

B. Manufacturers: Provide products manufactured by Hollman, or equal.

C. Products: Indicated on the Drawings or selected by the Architect, or equal.

D. Requisite Properties:
   1. Dimensions: Indicated on the Drawings or selected by the Architect.
   2. Color: Indicated on the Drawings or selected by the Architect.
   3. Handle: Easy-grip recessed handle.
   4. Locking: Padlock friction hasp.
   5. Accessible Lockers: ADA locker modifications include added shelf 9 inches off the floor, ADA-compliant hinge that allows the door to open 180 degrees, ADA locker tag, and ADA-compliant latch and locking hardware that do not require twisting, pinching, or grasping to operate.

2.02 ACCESSORIES

A. Stainless-Steel Hooks: Provide one double-prong back hook and two single prong wall hooks at each compartment.

B. Number Plates: Manufacturer’s standard engraved plates; verify numbering with Architect.

C. Locking: Provide lockers with padlock hasps, key locks, or built-in combination locks, as indicated on the Drawings.

D. Other Accessories: Provide accessories and secondary items normally furnished or necessary for a complete installation; or supplied, required, recommended, or accepted by the manufacturer for actual in-service conditions applicable to the project.

PART 3 - EXECUTION

3.01 INSTALLATION REQUIREMENTS

A. General:
   1. Ensure proper supervision practices are followed at the project site before the installer begins work and at all times during installation.
   2. Verify in-place supporting and adjacent construction conforms to the manufacturer's requirements or recommendations and satisfies all other conditions that might affect the quality of installation or the durability, appearance, or performance of installed lockers and adjacent items.
   3. Install lockers using materials and methods required, recommended, or accepted by the manufacturer, along with manufacturer-recommended accessories and techniques.
   4. Set items true to line, to required levels and lines, and plumb, level, and square, without warp or rack, with flush well-fitted joints, and in alignment with adjacent construction
   5. Securely attach lockers in place to supporting construction.
   6. Installed lockers must be warrantable. Do not install, correct, or replace lockers in a manner that results in any warranty or guarantee becoming void.

B. Installation Tolerances: Install lockers to an allowable tolerance variation of not more than 1/4-inch from true position and not more than 1/8-inch and from plumb, level, and alignment.

C. Correction and Repair:
   1. Correct deficiencies that do not conform to the Contract Documents.
   2. Repair non-conforming, damaged and defective work.
   3. Replace soiled items that cannot be cleaned to the same condition as new.

D. Protection:
   1. Protect installed lockers in place from soiling, deterioration, and damage until Substantial Completion.
   2. Remove protection when it's no longer needed and before Substantial Completion.

END OF SECTION

©AWCWEST 18E22 All rights reserved.
TAGTIS, TAGFFE, ELMTC, CLSC1090

SECTION 10 57 43
BAG CHECK RACKS

PART 1 - GENERAL

1.01 SUMMARY

A. Section Includes:
   1. Bag check racks.
   2. Supplementary components and accessories normally furnished or necessary for a complete installation, whether or not such items are indicated on the Drawings or included in the Specifications.

1.02 SECTION REQUIREMENTS

A. Submittals: Submit product data and shop drawings.

PART 2 - PRODUCTS

2.01 BAG CHECK RACKS

A. Products: Provide “Model 71-076” manufactured by Lincoln Aquatics, or equal.

B. Requisite Properties:
   1. Finish: Stainless steel.
   2. Tier: 2 tiered.

2.02 ACCESSORIES

A. Accessories: Provide accessories and secondary items normally furnished or necessary for a complete installation; or supplied, required, recommended, or accepted by the manufacturer for actual in-service conditions applicable to the project.

PART 3 - EXECUTION

3.01 INSTALLATION REQUIREMENTS

A. General:
   1. Ensure proper supervision practices are followed at the project site before the installer begins work and at all times during installation.
   2. Verify in-place supporting and adjacent construction conforms to the manufacturer’s requirements or recommendations and satisfies all other conditions that might affect the quality of installation or the durability, appearance, or performance of installed racks and adjacent items.
   3. Install racks using materials and methods required, recommended, or accepted by the manufacturer, along with manufacturer-recommended accessories and techniques.
   4. Set items true to line, to required levels and lines, and plumb, level, and square, without warp or rack, with flush well-fitted joints, and in alignment with adjacent construction

5. Securely attach racks in place to supporting construction.
6. Installed racks must be warrantable. Do not install, correct, or replace racks in a manner that results in any warranty or guarantee becoming void.

B. Installation Tolerances: Install racks to an allowable tolerance variation of not more than 1/4-inch from true position and not more than 1/8-inch and from plumb, level, and alignment.

C. Correction and Repair:
1. Correct deficiencies that do not conform to the Contract Documents.
2. Repair non-conforming, damaged and defective work.
3. Replace soiled items that cannot be cleaned to the same condition as new.

D. Protection:
1. Protect installed racks in place from soiling, deterioration, and damage until Substantial Completion.
2. Remove protection when it's no longer needed and before Substantial Completion.

END OF SECTION

©AWCWEST 18E22 All rights reserved.
TAGTIS, TAGFFE, ELMTC, CLSC1090

DIVISION 12

FURNISHINGS

SECTION 12 36 17
STAINLESS STEEL COUNTERTOPS

PART 1 - GENERAL

1.1 SUMMARY

A. Section Includes:
   1. Stainless steel countertops.
   2. Supplementary components and accessories normally furnished or necessary for a complete installation, whether or not such items are indicated on the Drawings or included in the Specifications.

1.2 SECTION REQUIREMENTS

A. Qualifications:
   1. Manufacturer: Company or individuals must have at least 10 years' experience manufacturing countertop material installed on at least 200 previous projects similar to this project in size, material, design, and complexity.
   2. Fabricator: Company or individuals must have at least 10 years' experience fabricating countertops installed on at least 100 previous projects similar to this project in size, material, design, and complexity
   3. Installer: Company or individuals must have at least 5 years' experience installing countertops for at least 30 previous projects similar to this project in size, material, design, and complexity.
   4. Supervisors: Individuals must have at least 7 years' experience installing countertops for at least 30 previous projects similar to this project in size, material, design, and complexity, including at least 2 years' supervisory experience directing and leading countertop installers.

B. Submittals: Submit product data, shop drawings, and written descriptions of specified qualifications.

PART 2 - PRODUCTS

2.1 STAINLESS STEEL COUNTERTOPS

A. Description: Countertops fabricated from non-magnetic austenitic stainless steel sheet.
   1. Provide sheet metal selected for its surface flatness, smoothness and freedom from surface blemishes where exposed to view in the finished unit.
   2. Do not use materials whose exposed surfaces exhibit pitting, seam marks, roller marks, variations in flatness exceeding those permitted by referenced standards for stretcher-leveled metal sheet, stains, discoloration or other imperfections.

B. Materials: Stainless steel sheet conforming to ASTM A 666 (annealed and tempered), Type 316L (for welded applications) or Type 316 (for all other applications), annealed, No. 2 (half hard) temper (hardness between Rockwell B-65 and B-70; can be bent 90 degrees across the direction of rolling around a radius equal to its thickness), passivated in conformance with ASTM A 967.

C. Requisite Properties:
   1. Thickness: 0.0781-inch thick. (USSG 14)
   2. Edge Profile: Indicated on the Drawings.

3. Finish: No. 4 directional finish.

2.2 ACCESSORIES

A. Adhesive: Structural-grade silicone or epoxy adhesives of type recommended or accepted by manufacturer for conditions of use. Tint adhesive visible in finished work to match countertop materials.

B. Sealant:
   1. Description: White or clear, medium or high modulus, mildew-resistant silicone sealant conforming to ASTM C 920 requirements for Type S, Grade NS, Class 25, Use NT, A or O sealant, as applicable.
   2. Products: “786” manufactured by Dow Corning Corp., or “Sanitary SCS 1700” manufactured by Momentive Performance Materials, Inc., or equal.

C. Solvent: Supplied, required, recommended, or accepted by the manufacturer to clean countertop surfaces to ensure adhesion of adhesives and sealants.

D. Cleaning Agents: Provide non-abrasive cleansers supplied, required, recommended, or accepted by the manufacturer.

E. Other Accessories: Provide accessories and secondary items normally furnished or necessary for a complete installation; or supplied, required, recommended, or accepted by the manufacturer for actual in-service conditions applicable to the project.

PART 3 - EXECUTION

3.1 INSTALLATION REQUIREMENTS

A. General:
   1. Ensure proper supervision practices are followed at the project site before the installer begins work and at all times during installation.
   2. Verify in-place supporting and adjacent construction conforms to the manufacturer’s requirements or recommendations, and satisfies all other conditions that might affect the quality of installation or the durability, appearance, or performance of installed countertop and adjacent items.
   3. Install countertops using materials and methods required, recommended, or accepted by the manufacturer, along with manufacturer-recommended accessories and techniques.
   4. Set countertops true to line, to required levels and lines, and plumb, level, and square, without warp or rack, with flush well-fitted joints, and in alignment with adjacent construction.
   5. Securely attach countertops in place to supporting construction.
   6. Installed countertops must be warrantable. Do not install, correct, or replace countertops in a manner that results in any warranty or guarantee becoming void.

B. Special Techniques:
   1. Shim as required using concealed shims.
   2. Scribe and fit accurately against adjacent surfaces for a close fit.
   3. Attach countertops securely to supports with concealed screws as required for a rigid and secure installation.
   4. Seal interface of countertops with contiguous surfaces with sealant.

C. Installation Tolerances: Install countertops to an allowable tolerance variation of not more than 1/4-inch from true position and not more than 1/8-inch and from plumb, level, and alignment.

D. Correction and Repair:
   1. Correct deficiencies that do not conform to the Contract Documents.
   2. Repair non-conforming, damaged and defective work.
   3. Replace soiled items that cannot be cleaned to the same condition as new.

E. Protection:
   1. Protect installed equipment in place from soiling, deterioration, and damage until Substantial Completion.
   2. Remove protection when it's no longer needed and before Substantial Completion.

END OF SECTION

©AWCWEST 18E22 All rights reserved.

DIVISION 13

SPECIAL CONSTRUCTION

SECTION 13 1100
SWIMMING POOL GENERAL REQUIREMENTS

PART 1 - GENERAL

1.1 WORK INCLUDED

A. The scope of the work included under this Section of the Specifications shall include swimming pool(s) as illustrated on the Drawings and specified herein. The General and Supplementary Conditions of the Specifications shall form a part and be included under this Section of the Specifications. The Swimming Pool Subcontractor shall provide all supervision, labor, material, equipment, machinery, plant and any and all other items necessary to complete the work. ALL OF THE WORK IN SECTIONS 13 1100 – 13 1108 IS TO BE THE RESPONSIBILITY OF ONE EXPERIENCED SWIMMING POOL SUBCONTRACTOR PRIMARILY ENGAGED IN THE CONSTRUCTION OF COMMERCIAL PUBLIC-USE SWIMMING POOLS. A SWIMMING POOL SUBCONTRACTOR SHALL BE CONSIDERED PRIMARILY ENGAGED AS REQUIRED HEREIN IF THE SUBCONTRACTOR DERIVED 50% OF ITS ANNUAL REVENUE FROM PUBLIC-USE SWIMMING POOL CONSTRUCTION FOR EACH OF THE LAST FIVE YEARS. THE SUBCONTRACTOR MUST HAVE ALSO, IN THE LAST FIVE YEARS CONSTRUCTED AT LEAST FIVE (5) COMMERCIALLY DESIGNED MUNICIPAL AND PUBLIC-USE SWIMMING POOLS, EACH OF WHICH SHALL HAVE INCORPORATED A MINIMUM SIZE OF 6,000 SQUARE FEET OF WATER SURFACE AREA WITH A CONCRETE AND CERAMIC TILE PERIMETER OVERFLOW GUTTER AND SELF-MODULATING BALANCE TANK. The Swimming Pool Subcontractor shall furnish and install the swimming pool structures, finishes, cantilever forming, swimming pool mechanical and electrical systems, and all accessories necessary for a complete, functional swimming pool system, as herein described. Work shall include start-up, instruction of Owner’s personnel, as-built drawings and warranties as required.

1.2 CODES, RULES, PERMITS, FEES

A. The swimming pools shall be constructed in strict accordance with the applicable provisions set forth by authorities having jurisdiction over swimming pool construction and operation in the State of California.

B. The Swimming Pool Subcontractor shall give all necessary notices, obtain all permits, and pay all government sales taxes, fees, and other costs in connection with their work; file all necessary plans, prepare all documents and obtain all necessary approvals of governmental departments having jurisdiction; obtain all required certificates of inspection for their work and deliver same to the Designated Representative before request for acceptance and final payment for the work.

C. The Swimming Pool Subcontractor shall include in the work any labor, materials, services, apparatus, or drawings in order to comply with all applicable laws, ordinances, rules and regulations, whether or not shown on Drawings and/or specified.

D. The Contractor shall submit all required documents and materials to all Governmental Departments having jurisdiction for any deferred approval items or substituted materials or products to obtain final approval to installation.

1.3 DESCRIPTION OF WORK

A. Furnish and perform supervision, coordination, all layout, formwork, excavation, hand trim, disposing off-site of all unused material or debris to complete the swimming pool excavation to the dimensions shown on the plans.

B. Furnish and install complete swimming pool structures, including reinforcing steel and cast-in-place or pneumatically placed concrete walls and floors.

C. Furnish and install swimming pool finishes, including ceramic tile and marble plaster or other waterproof finishes.

D. Furnish and install complete swimming pool mechanical system(s), including, but not limited to, circulation systems, filtration systems, pool water heating systems, water chemistry control systems, domestic water fill line systems, booster pump and special effects systems, and all pumps, piping, valves, and connections between system(s) and swimming pool(s).

E. Furnish and install complete swimming pool electrical system(s) from P.O.C. in Mechanical Room, including, but not limited to, underwater lighting systems, water level control systems, timing systems, scoreboards, special effects systems, control circuitry, motor starters, time clocks, bonding, and all conduits, conductors, contactors, and switches between the system(s) and swimming pool(s).

F. Furnish and install all swimming pool cantilever forming, deck equipment and required anchors and inserts for the specified equipment as required by code, shown on the Drawings and specified herein.

G. After the initial filling of the swimming pool system(s), should any repairs, continuing work, or other Subcontractor responsibility require drainage or partial drainage of the swimming pool systems, the Swimming Pool Subcontractor shall be responsible for any subsequent refilling and shall complete the project with the swimming pool system(s) full of water, water in chemical balance, complete in every way, and in full operation.

1.4 ASSIGNED RESPONSIBILITIES AND RELATED WORK

A. It is the intent of this section of the Specifications to clarify Work responsibilities of the trades directly and indirectly involved in construction of the pool systems. All labor, equipment, materials and supplies furnished by the Swimming Pool Subcontractor and other Subcontractors per the contractual agreement with the General Contractor and Owner and shall be as directed by the Owner through their Designated Representative.

B. THE SWIMMING POOL SUBCONTRACTOR SHALL NOT SUBCONTRACT ANY PORTION OF THE SWIMMING POOL CONSTRUCTION OR SWIMMING POOL EQUIPMENT INSTALLATION TO ANYONE OTHER THAN A SUBCONTRACTOR THAT SATISFIES THE REQUIREMENTS OF SECTION 13 1100.

C. References to “swimming pool systems” shall include the swimming pools, equipment, and accessories.

D. The Owner will provide one complete water filling of the swimming pool(s), but will not assume any responsibility for the swimming pool system(s) until they have been proved fully operational, complete in every way and accepted by the Designated Representative.

1.5 RESPONSIBILITIES OF THE CONTRACTOR

A. The Contractor shall grade the swimming pool site(s), establish benchmarks, cut and fill as necessary to provide as level an area as possible at swimming pool deck elevation before swimming pool layout.

B. The Contractor shall be responsible for horizontal dimensions and grade elevations accurately from established lines and benchmarks (as indicated on the Drawings) and be responsible for those grades.

C. The Contractor shall provide adequate temporary light, electric power, heat and ventilation per Federal and State OSHA requirements to construct the swimming pool system(s).

D. The Contractor shall not permit any heavy equipment activity over any area or within five (5) feet of any area under which swimming pool piping is buried. There shall be no exceptions to this requirement.

E. The Contractor shall keep the swimming pool excavation(s) and swimming pool structure(s) free of construction residue and waste materials of their workmen or Subcontractors, removing said material from the swimming pools as required.

F. The Contractor shall protect the swimming pool(s) from damage caused by their construction equipment and /or workmen and Subcontractors.

G. The Contractor shall provide a representative at time of swimming pool start-up to coordinate all trades related to swimming pool system(s).

1.6 RESPONSIBILITIES OF THE MECHANICAL SUBCONTRACTOR

A. The Mechanical Subcontractor shall be licensed in the State of California and provide written notifications to Swimming Pool Subcontractor and contractor when necessary to excavate and backfill within the swimming pool construction site.

B. The Mechanical Subcontractor shall not utilize any swimming pool piping trench for installation of any sanitary sewer, storm sewer, domestic water, hot water, chilled water or natural gas line.

C. The Mechanical Subcontractor shall furnish and install all sanitary sewer piping, including vent stacks (if necessary), for backwash pits, floor drains and floor sinks as required by code, shown on Drawings, and herein specified.

D. The Mechanical Subcontractor shall furnish and install all storm sewer piping and site drainage systems as required by code, shown on the Drawings, and herein specified.

E. The Mechanical Subcontractor shall provide a minimum 75 psi water supply for swimming pool construction work within fifty (50) feet of the swimming pool construction site(s).

F. The Mechanical Subcontractor shall furnish and install reduced pressure backflow protected domestic water lines to P.O.C. within swimming pool Mechanical Room as required by code, shown on the Drawings, and herein specified.

G. The Mechanical Subcontractor shall furnish and install natural gas piping, pressure regulation and valving to P.O.C. within swimming pool Mechanical Room as required by code, shown on the drawings, and herein specified.

H. The Mechanical Subcontractor shall furnish and install all ductwork, louvers, and all HVAC equipment within swimming pool Mechanical Room as required by code, shown on the Drawings, and herein specified.

I. The Mechanical Subcontractor shall provide a representative at time of swimming pool start-up to coordinate work related to swimming pool system(s).

1.7 RESPONSIBILITIES OF THE ELECTRICAL SUBCONTRACTOR

A. The Electrical Subcontractor shall be licensed in the State of California and shall furnish and install electrical service to swimming pool Mechanical Room sized to accommodate all necessary swimming pool equipment as shown on the Drawings and herein specified.

B. The Electrical Subcontractor shall furnish any temporary power needed by the Swimming Pool Subcontractor within fifty (50) feet of the swimming pool construction site(s).

C. The Electrical Subcontractor shall furnish and install all conduits, conductors, starters/disconnects, panels, circuits, switches and equipment as required for lighting, ventilation and HVAC equipment within swimming pool Mechanical Room as required by code, shown on the Drawings, and herein specified.

D. The Electrical Subcontractor shall furnish and install all conduits, conductors, panels, circuits, switches and equipment for area lighting as required by code, shown on the Drawings, and herein specified.

E. All equipment, material and installation shall be as required under Division 16 of the Specifications and shall conform to NEC Article 680 (latest revision), State and Local Codes, and as may be required by all authorities having jurisdiction over swimming pool construction within the State of California.

F. The Electrical Subcontractor shall provide a representative at time of swimming pool start-up to coordinate work related to swimming pool system(s).

1.8 INTENT

A. It is the intention of these specifications and Drawings to call for finished work, tested and ready for operation. Wherever the work “provide” is used, it shall mean “furnish and install complete and ready for use.”

B. Minor details not usually shown or specified, but necessary for proper installation and operation, shall be included in the work, the same as if herein specified or shown.

1.9 SCHEDULE OF VALUES

A. Provide a Schedule of Values for all work specified in each of the technical specifications listed in the table below, regardless of whether the work is performed by the swimming pool contractor or others. Values listed shall be fully burdened, with contractor general conditions, overhead, profit and bonds included. Payments for swimming pool work completed shall not be approved until Schedule of Values has been submitted to and approved by Architect.

SWIMMING POOL SCHEDULE OF VALUES			
No.	Section #	Description	Value
1.	13 1101	Swimming Pool Excavation	
2.	13 1102	Swimming Pool Concrete	
3.	13 1103	Swimming Pool Shotcrete	
4.	13 1104	Swimming Pool Ceramic Tile	
5.	13 1105	Swimming Pool Plaster	
6.	13 1106	Swimming Pool Equipment	
7.	13 1107	Swimming Pool Mechanical	

8.	13 1108	Swimming Pool Electrical	
Total			

1.10 SUBMITTAL PROCEDURES

A. General: Electronic copies of CAD Drawings of the Contract Drawings will not be provided by Architect for Subcontractor's use in preparing submittals.

B. Coordination: Coordinate preparation and processing submittals with performance construction activities.

1. Coordinate each submittal with fabrication, purchasing, testing, delivery, other submittals, and related activities that require sequential activity. Coordinate transmittal of different types of submittals for related parts of the Work so processing will not be delayed because of need to review submittals concurrently for coordination.

a. Architect reserves the right to withhold action on a submittal requiring coordination with other submittals until related submittals are received.

C. Submittals Schedule: Comply with requirements in Division 1 Section "Construction Progress Documentation" for list of submittals and time requirements for schedules performance of related construction activities.

D. Processing Time: Allow enough time for submittal review, including time for re-submittals as follows. Time for review shall commence on Architect's receipt of submittal.

1. Initial Review: Allow fifteen (15) days for initial review of each submittal. Allow additional time if processing must be delayed to permit coordination with subsequent submittals. Architect will advise Contract when a submittal being processed must be delayed for coordination.

2. Concurrent Review: Where concurrent review of submittals by Architect's consultants, Owner, or other parties is required, allow twenty-one (21) days for initial review of each submittal.

3. Direct Transmittal to Consultant: Where the Contract Documents indicate that submittals may be transmitted directly to Architect's consultants, provide duplicate copy of transmittal to Architect. Submittal will be returned to Architect before being returned to Subcontractor.

4. If intermediate submittal is necessary, process it in same manner as initial submittal.

5. Allow fifteen (15) days for processing each submittal.

6. No extension of the Contract Time will be authorized because of failure to transmit submittals enough in advance of the Work to permit processing.

E. Identification: Place a title block on each submittal for identification.

1. Indicate name of firm or entity that prepared each submittal on title block.

2. Provide a space on title block to record Subcontractor's review and approval markings and action take by Architect.

3. Include the following information on title block for processing and recording action taken: (See Attached Sample)

    a. Project name.

    b. Date.

    c. Name and address of Subcontractor.

    d. Name of Subcontractor.

    e. Name of Supplier.

    f. Name of Manufacturer.

    g. Unique identifier, including revision number.

    h. Number and title of appropriate Specification Section.

    i. Drawing number and detail references, as appropriate.

    j. Other necessary identification.

SUBMITTAL FOR:	SUBMITTAL TO:	SUBCONTRACTOR:

Item Number: _____
Section Number: _____
Section Description: _____
Subcontractor: _____
Supplier: _____
Manufacturer: _____
Product Code: _____
Quantity: _____

Subcontractor Certification:

It is hereby certified that the equipment or material designated in this submittal is proposed to be incorporated in the above-named project and is in compliance with the contract drawings and / or specifications and is submitted for approval.

Certified by: _____

Date: _____

Job Superintendent: _____

Revisions: _____

Contractor's Submittal Stamp:

Architect's Review Stamp and Comments

F. Deviations: Highlight, encircle, or otherwise identify deviations from the Contract documents on submittal.

G. On all catalogue or cut sheets identify which model or type is being submitted.

H. Transmittal: Package each submittal individually and appropriately for transmittal and handling. Product data and shop drawings shall be packaged within a three-ring binder and colored samples shall be packaged on a heavy cardboard. Transmit each submittal using a transmittal form.

1. On an attached separate sheet, prepared on Subcontractor's letterhead, record relevant information, request for data, revisions other than those requested by Architect on previous submittals and deviations from requirements of the Contract documents, including minor variations and limitations. Include the same label information as the related submittal.

2. Include Subcontractor's certification stating that information submitted complies with requires of the Contract Documents.

3. Transmittal Form: Provide locations on form for the following information:

a. Project name.

b. Date.

c. Destination (To:).

d. Source (From:).

e. Names of Subcontractor, manufacturer, and supplier.

f. Category and type of submittal.

g. Submittal purpose and description.

h. Remarks.

I. Distribution: Furnish copies of final submittals to manufacturers, Subcontractors, suppliers, fabricators, installers, authorities having jurisdiction and others as necessary for performance of construction activities. Show distribution on transmittal forms.

J. Use for Construction: Use only final submittals with mark indicating action taken by Architect in connection with construction.

1.11 SUBSTITUTIONS

A. To obtain approval to use unspecified products, bidders shall submit requests for substitution at least ten (10) days prior to bid date. Requests shall only be considered if they clearly describe the product for which approval is asked, including all data necessary to demonstrate acceptability. All unspecified products and equipment will be considered on an “or equal” basis at the discretion of the Designated Representative. Requests for substitution received after the specified deadline will not be considered. Where a conflict exists between the requirements of

the General Conditions / Special Conditions / Division 1 concerning substitutions and the requirements of this Article, this Article (Section 13 1100, Article 1.10) shall govern.

B. Where the Swimming Pool Subcontractor proposes to use an item of equipment other than that specified or detailed on the Drawings which requires any redesign of the structure, partitions, foundations, piping, wiring, or any other part of the architectural, mechanical, or electrical layout, all such redesign and all new drawings (stamped by California Licensed Engineer) and detailing required shall be prepared by the Swimming Pool Subcontractor, at their own expense, submitted for review and approval by the Designated Representative prior to bid.

C. Where such approved deviation requires a different quantity and arrangement of piping, supports and anchors, wiring, conduit, and equipment from that specified or indicated on the Drawings, the Swimming Pool Subcontractor shall furnish and install any such piping, structural supports, controllers, motors, starters, electrical wiring and conduit, and any other additional equipment required by the system, at no additional cost to the Owner.

1.12 SURVEYS AND MEASUREMENTS

A. The Swimming Pool Subcontractor shall base all measurements, both horizontal and vertical, from benchmarks established by the Contractor. All work shall agree with these established lines and levels. The mechanical Drawings do not give exact details as to elevations of piping, exact locations, etc. and do not show all offsets, control lines, pilot lines and other installation details. Verify all measurements at site and check the correctness of same as related to the work.

1.13 DRAWINGS

A. Drawings are diagrammatic and indicate the general arrangement of the systems and work included in the Subcontractor. Drawings are not to be scaled. The architectural drawings and details shall be examined for exact dimensions. Where they are not definitely shown, this information shall be obtained from the Designated Representative.

1.14 SWIMMING POOL SUBSUBCONTRACTOR

A. The swimming pool construction work as herein described and specified in Division 13 of the Project Manual shall be the complete responsibility of a qualified and specifically licensed (C-53 license classification within the State of California) Swimming Pool Subcontractor with extensive experience in commercial public use swimming pool installations.

B. The Contractor shall require the Swimming Pool Subcontractor to furnish to the Contractor performance and payment bonds in the amount of 100% of the Swimming Pool Subcontractor's bid written by a surety Company properly registered in the State of California and listed by the U.S. Treasury. The expense of the bond(s) is to be borne by the Subcontractor. The Contractor shall clearly specify the amount and requirements of the bond(s) in the Contractor's written or published request for subbids. The Contractor's written or published request for subbids shall also specify that the bond(s) expense is to be borne by the Subcontractor.

C. Subcontractor certifies that it meets the qualifications and experience requirements established in Swimming Pool General Requirements, Section 13 1100, as follows:

1. Subcontractor has derived 50% of its annual revenue from public-use swimming pool construction for each of the last five (5) years.

2. Subcontractor has, in the last five (5) years, constructed at least five (5) commercially designed municipal and public-use swimming pools, each of which have incorporated a minimum size of 6,000 square feet of water surface area with a concrete and ceramic tile perimeter overflow gutter and self-modulating balance tank.

3. The following list of projects meet the requirements of section (b) above and the contact as reference by the Contractor, the Awarding Authority of their agent or designee.

a. Owner: _____
Scope of Project: _____
Contact Person: _____
Phone Number: _____
Architect for Project: _____

b. Owner: _____
Scope of Project: _____
Contact Person: _____
Phone Number: _____
Architect for Project: _____

c. Owner: _____
Scope of Project: _____
Contact Person: _____
Phone Number: _____
Architect for Project: _____

d. Owner: _____
Scope of Project: _____
Contact Person: _____
Phone Number: _____
Architect for Project: _____

e. Owner: _____
Scope of Project: _____
Contact Person: _____
Phone Number: _____
Architect for Project: _____

1.15 OPERATING INSTRUCTIONS

A. The Swimming Pool Subcontractor shall determine from actual samples of pool water supplied by the Owner, the proper water management program necessary for maximum operating efficiency and comfort. The Swimming Pool Subcontractor shall provide the services of experienced personnel familiar with this type of pool system operation, in conformance with Section 13 1105 of the Specifications.

1.16 MAINTENANCE MANUALS

A. The Swimming Pool Subcontractor shall provide six (6) bound sets for delivery to the Designated Representative of instructions for operating and maintaining all systems and equipment included in this Contract. Manufacturer's advertising literature or catalog pictures will not be acceptable for operating and maintenance instructions.

B. Bound in ring binders shall be all parts lists, periodic maintenance instructions and troubleshooting guidelines for all pool equipment, including but not limited to filters, pumps, controllers, water chemistry control equipment, etc.

1.17 SECURE FROM THE OWNER

A. A complete Owner-furnished filling of the swimming pools.

B. The Owner's assistance, as specified herein, from the time of start-up until final written acceptance of the swimming pool system(s).

C. Chemicals as required for swimming pool operation after Swimming Pool Subcontractor completes initial water chemistry balance and water treatment during the maintenance period described in Section 13 1105 of the Specifications.

1.18 WARRANTY

A. The Swimming Pool Subcontractor shall warrant all swimming pool structures, finishes and systems against defects in material and workmanship for a period of one year after the date of acceptance by the Owner. Any repair or replacement required due to defective material or workmanship will be promptly corrected by the Swimming Pool Subcontractor.

PART 2 - PRODUCTS
NOT USED

PART 3 - EXECUTION
NOT USED

END OF SECTION

SECTION 13 1101
SWIMMING POOL EXCAVATION

PART 1 - GENERAL

1.1 DESCRIPTION

A. Finish and fine grading to bring the surface of the ground to the required grades and elevations as indicated on the Drawings.

B. Subgrade improvements and placing of compacted fills.

C. Excavation and backfill for all swimming pool, pool deck and surge chamber structural, including footings, foundations, slabs and walls.

1.2 QUALITY ASSURANCE

A. Requirements of Regulatory Agencies: Conform with requirements of the General Conditions, and more specifically the following:

1. Comply with the 2019 California Building Code.

2. Comply with applicable construction safety orders, latest edition, Federal and State OSHA.

3. Comply with applicable trench safety provisions, latest edition, Federal and State OSHA.

B. Qualifications of Workers:

1. The entity performing the work of this Section shall have been successfully engaged in the respective trade for at least five (5) years immediately prior to commencement of the Work.

2. For actual construction operations, use only trained and experienced workers with a minimum of three (3) years experience with the materials and methods specified.

3. Provide at least one person who shall be present at all times during execution of the work of this Section, with a minimum of five (5) years experience with the type of materials being installed, the referenced standards, and who shall direct all Work performed under this Section.

C. Project/Site Conditions:

1. Be familiar with site and subsurface conditions.

2. Excavation is unclassified and includes excavation to sub-grade elevations indicated or necessary, regardless of character of materials and obstructions encountered.

3. Provisions for mitigation of wet soils due to seepage or rain shall be made during excavation and throughout construction. If wet soils are encountered within the

swimming pool excavations, de-watering shall be provided and the Geotechnical Engineer shall make recommendations for moist soil mitigation.

4. Where slope instability is encountered, all excavations within those areas shall be 1:1 or flatter. Forming of vertical walls may be necessary, and all soil conditions shall be field verified by the Geotechnical Engineer.

5. Contractor shall review the Geotechnical Investigation Report as furnished by the Owner's Representative to determine the suitability of the soils.

D. Adverse Weather Conditions:

1. During the periods when site soil moisture content is substantially in excess of moisture content required for optimum compaction, do not perform fill compaction.

2. When unfavorable weather conditions necessitate interrupting filling and grading operations, prepare areas by compaction of surface and grading to avoid collection of water. Provide adequate temporary drainage to prevent erosion.

1.3 SUBMITTALS AND SUBSTITUTIONS

A. Provide submittals in conformance with requirements of Section 01 3300.

B. Required submittals include:

1. Offsite fill material, if applicable.

C. Submit proof of qualifications as specified in Article 1.2.A of this Section

1.4 EXCAVATING & TRENCHING, GENERAL REQUIREMENTS

A. Refer to Section 015500, Temporary Facilities and Controls.

B. All trenches, holes, etc. are to be completely protected using solid barricades, steel plates, and plywood both during construction and during off hours, including night time.

C. Flashing warning light barricades are required on sidewalks, roads, and any other critical areas that require night time protection.

D. Roads, paths and sidewalks shall not be blocked at any time or in any way. Trenching across roads, paths or sidewalks involves special instructions and review of the construction procedure by the Owner's Representative at least three (3) days prior to the Work actually being started.

E. Construction equipment, including all trucks, cars, etc. shall not be parked or driven on roads, paths or sidewalks. Items not allowed on roads, paths or sidewalks include hoses, power cords, ropes, construction materials, dirt and debris, etc.

F. All roads, paths and sidewalks must remain clear and the Contractor shall maintain temporary safe and effective pedestrian access at all times.

G. Drawings show existing major underground utilities using the best information available. The Contractor shall also fully check public works reference drawings prior to excavation. Call local Dig Alert to locate utilities to ensure safety.

PART 2 - PRODUCTS

2.1 MATERIALS

A. Fill Material, General: All material shall be subject to the review of the Geotechnical Engineer to determine acceptability.

B. The existing native clay shall not be reused as compacted fill. It shall be removed from the job site or placed in landscaped areas. The remaining onsite fill and native soil is suitable for reuse provided its free of organic material, debris, and does not contain fragments greater than 3 inches in maximum dimension. Drying of wet site soils or mixing of these soils with dryer soils may be required prior to being used as compacted fill.

C. Import fill may also be used instead of the native soil. Import fill material shall be predominantly granular (minimum 80% passing number 4 sieve and between 10% and 35% passing the number 200 sieve), and non-expansive (EI less than 25). Also, the import fill material shall be free of organic or inorganic debris, contamination and materials with any dimension larger than 3 inches. Import materials shall be reviewed for approval by the Soils Engineer prior to importing to the job site and the Soils Engineer shall be notified a minimum of three working days prior to scheduled importing of soil to the project site.

D. Fill material shall be placed in loose lifts no exceeding 8 inches in thickness, moisture conditioned to within 3 percent above optimum, and mechanical compacted.

PART 3 - EXECUTION

3.1 INSPECTION

A. Verify drawing dimensions and elevations with actual field conditions. Inspect related Work and adjacent surfaces and report discrepancies and conditions which prevent proper execution of the Work to the Owner’s Representative.

3.2 SUBGRADE IMPROVEMENTS

A. Site preparation will initially involve the demolition of the existing swimming pool and concrete deck surrounding the pool. Following demolition, the construction area shall be cleared of any vegetation and stripped of miscellaneous debris and other deleterious material. Tree removal, if proposed outside the existing pool deck area, shall include the rootballs and/or root systems. Organic matter and other material that may interfere with construction shall be removed. Vegetation and organic matter shall not be incorporated into the fill material. Organic rich soil, if present, may be stockpiled for future landscaping. Voids resulting from the demolition shall be backfilled with properly compacted fill.

B. Excavation bottoms shall be scarified at least 6 inches, moisture conditioned to within 3 points above the optimum moisture content, and compacted to a minimum 90 percent relative compaction (RC), as determined by ASTM D1557. All excavation bottoms shall be observed,

tested, and approved by a representative of the Soils Engineer and the LADBS Grading Inspector prior to placement of fill.

C. All existing fill shall be removed beneath the pool. The soils beneath the proposed pool shall be excavated to the design subgrade elevation or to expose native soil, whichever is greater. An additional removal of 12 inches shall be performed such that the pool bottom is underlain by at least 12 inches on non-expansive compaction fill. Lateral over-excavation beyond the limits of the pool is not required. If soft and yielding conditions are encountered under the pool, the bottom shall be excavated an additional 12 inches. This 12-inch thick removal is separate and in addition to the over excavation discussed above. The “new” bottom shall be lined with Mirafi 600X or approved equal stabilization geotextile. A 12-inch-thick layer of ¾ inch to 1-inch crushed rock shall be placed on top of stabilization geotextile. The top of the crushed rock layer shall be covered with Mirafi 140N or approved equal filter cloth.

D. Existing fill may be left in place beneath non-structural footings and the new pool deck. The earthwork beneath non-structural footings, including the subgrade preparation shall result in at least 24 inches of compacted fill below the bottom of footing. The excavation shall extend laterally beyond the footing a distance of 2 feet or to the property boundary, whichever is less. The new pool deck shall be underlain by at least 18 inches of compacted fill, which includes the subgrade preparation.

3.3 EXCAVATION

A. Checking Layout: Contractor shall, before commencing the excavation work, check all lines, stakes and levels for dimensions, angles, elevations and grades with the survey.

B. Except where extra excavation is directed by the Owner’s Representative or Geotechnical Engineer, excavations made to a greater depth or size than indicated or required shall be filled with concrete or shotcrete as specified in Sections 13 1102 / 13 1103.

C. Dimensions: Excavate to proper dimensions as shown, cut square and smooth with firm level bottoms. Prepared excavations shall be approved by Geotechnical Engineer. Excavations shall be free of loose or disturbed materials.

D. Excess Water Control: Keep all excavations free from standing water by pumping, draining or providing proper protection against water intrusion. If soil becomes soft, soggy or saturated, perform additional excavation to firm soil not affected by water.

E. Form Removal: Make all excavations of sufficient size to permit installation and removal of forms and all other required work.

F. Alternate Forming: Sides of structures may be formed by neat excavations where banks will stand without caving. If banks cave, provide forming as required and widen excavation to permit forming, bracing and inspection. Provide forming in conformance with Section 13 1102 and all recognized safety standards.

3.4 BACKFILLING

A. Method: After concrete has been placed, forms removed and concrete work approved, backfill the excavations with earth to indicated or required grades. Carry on backfilling simultaneously on each side of walls or grade beams. Remove all rubbish and wood from the excavations before placing backfill.

B. Concrete Protection: Prior to placing any backfill, adequately cure all concrete and provide any bracing required to ensure the stability of the structure. Protect waterproofing and dampproofing against damage in a manner acceptable to the Owner's Representative. Remove bracing as backfill operations progress.

C. Material: Use the material from the excavations for backfilling, subject to approval by Soils Testing Agency. The earth shall be free from debris, large clods or stones.

D. Lifts: Place backfill in six (6) inch loose layers, bring to optimum moisture content and compact to ninety percent (90%) of maximum density, sloping down and away from the structures being backfilled.

E. Moisture: Rigidly control the amount of water used to ensure optimum moisture conditions for the type of fill material used. Excessive amounts of water causing saturation of earth will not be permitted. Compaction by flooding or jetting is prohibited.

3.5 GRADING

A. Slopes: Grade to finish grades indicated on Drawings, with uniform slopes between all points.

B. Subgrades: Blade to required grade and roll or tamp subgrades for exterior slabs, decks and paving.

3.6 CLEAN-UP

A. Disposal: Haul away rubbish, debris, and rocks from site promptly and dispose of legally. Burning rubbish on site is prohibited.

B. Dust and Noise Abatement: During entire period of construction keep area and material being loaded sprinkled to reduce dust in air and annoyance to premises and surrounding property.

END OF SECTION

SECTION 13 1102
SWIMMING POOL CONCRETE

PART 1 - GENERAL

1.1 WORK INCLUDED

A. Forming for cast-in-place concrete and shotcrete associated with swimming pools.

B. Reinforcement for cast-in-place concrete and shotcrete associated with swimming pools.

C. Cast-in-place concrete for swimming pool structures. Do not use waterproofing admixture of any kind.

D. Provide labor, materials and equipment as required to install sealant for all pool deck expansion joints, or any other caulking, as indicated on the aquatic Drawings and herein specified.

1.2 QUALITY ASSURANCE

A. Qualifications of Workers:

1. The entity performing the work of this Section shall have been successfully engaged in the respective trade for at least five (5) years immediately prior to commencement of the Work.

2. For actual construction operations, use only trained and experienced workers with a minimum of three (3) years' experience with the materials and methods specified.

3. Provide at least one person who shall be present at all times during execution of the work of this Section, with a minimum of five (5) years' experience with the type of materials being installed, the referenced standards, and who shall direct all Work performed under this Section.

B. Standards:

1. In addition to complying with the California Building Code (latest edition), comply with all pertinent recommendations contained in, "Guide to Formwork for Concrete" Publication ACI 347R-14 of the American Concrete Institute.

2. In addition to complying with California Building Code (latest edition), comply with all pertinent recommendations contained in "Guide to Presenting Reinforcing Steel Design Details," Publication ACI 315R-18 of the American Concrete Institute.

3. In addition to complying with all local codes and regulations, comply with all pertinent recommendations contained in American Society for Testing and materials (ASTM); ASTM C 920 "Standard Specification for Elastometric Joint Sealants."

C. Tolerances: Construct all swimming pool concrete straight, true, plumb and square within a tolerance horizontally of one in 200 and vertically of one in 2000.

1.3 SUBMITTAL AND SUBSTITUTIONS

A. Provide submittals in conformance with the requirements of Section 01 3300. Requests for substitution shall conform to requirements of Article 1.10.A of Section 13 1100.

B. Samples and Certificates, Concrete Reinforcement:

1. Provide all data and access required for testing as described in Section 01 4400 of the Specifications.

2. All material shall bear mill tags with heat number identification. Mill analysis and report shall be made available upon request.

3. Material not so labeled and identifiable may be required by the Owner to be tested by the testing laboratory selected by the Owner and at no additional cost to the Owner, in which case random samples will be taken for one series of tests from each 2-1/2 tons or fraction thereof of each size and kind of reinforcing steel.

4. Design mix from batch plant demonstrating previous use history and associated strengths at 28 days.

5. The Contractor shall submit a mix design stamped and signed by a licensed engineer for approval by the Owner's Representative prior to any placement of concrete.

C. Submit proof of qualifications as specified in Article 1.2.A of this Section.

D. Submit reinforcing shop drawings for pool walls, gutters, floors, dike walls and balance tank, etc. as shown on the construction drawing.

1.4 PRODUCT HANDLING

A. Delivery: Deliver materials to the Project Site in the manufacturer's original unopened containers with all labels intact and legible.

B. Storage: Store materials under cover in a manner to prevent damage and contamination, and store only the specified materials at the Project Site.

C. Protection: Use all means necessary to protect the swimming pool concrete before, during, and after installation and to protect the installed Work specified in other Sections.

D. Replacements: In the event of damage, immediately make all repairs and replacements necessary to the approval of the Owner.

PART 2 - PRODUCTS

2.1 CONCRETE FORMWORK

A. Form Materials:

1. Form Lumber: All form lumber in contact with exposed concrete shall be new except as allowed for reuse of forms in Part 3 of this Section, and all form lumber shall be one of the following, a combination thereof, or an equal approved in advance by the Owner's Representative.

a. "Plyform," Class I or II, bearing the label of the Douglas Fir Plywood Association; "Inner-Seal" Form as manufactured by Louisiana-Pacific, or approved equal.

b. Douglas Fir-Larch, number two grade, seasoned, surfaced four sides.

2. Form Release Agent: Colorless, non-staining, free from oils; chemically reactive agent that shall not impair bonding of paint or other coatings intended for use.

B. Ties and Spreaders:

1. Type: All form ties shall be a type which do not leave an open hole through the concrete and which permits neat and solid patching at every hole.

2. Design: When forms are removed, all metal reinforcement shall be not less than two (2) inches from the finished concrete surface.

3. Wire Ties and Wood Spreaders: Do not use wire ties or wood spreaders.

C. Alternate Forming Systems: Alternate forming systems may be used subject to the advance approval of the Owner's Representative.

2.2 CONCRETE REINFORCEMENT

A. Bars: Bars for reinforcement shall conform to "Specifications for Deformed Carbon-Steel Bars for Concrete Reinforcement," ASTM A-615, Grade 60.

B. Wire Fabric: Wire fabric shall conform to "Specification for Carbon-Steel Wire and Welded Wire Reinforcement, Plain and Deformed, for Concrete", ASTM A1064.

C. Tie Wire: Tie wire for reinforcement shall conform to "Specification for Carbon-Steel Wire and Welded Wire Reinforcement, Plain and Deformed, for Concrete", ASTM A1064. black annealed 16-gauge tie wire.

2.3 CAST-IN-PLACE CONCRETE

A. Concrete:

1. All concrete, unless otherwise specifically permitted by the Owner's Representative, shall be transit-mixed in accordance with ASTM C94. Concrete for water retaining structures that do not receive a waterproofing finish such as ceramic tile or swimming pool plaster shall receive a topical waterproofing finish.

2. The control of concrete production shall be under the supervision of a recognized testing agency, selected by the Owner in accordance with Section 01 25 00 of the Specifications.

3. Quality: All concrete shall have the following minimum compressive strengths at twenty-eight (28) days and shall be proportioned within the following limits:

a. 4,000 psi minimum compressive strength for cast-in-place swimming pool structures.

b. 1" maximum size aggregate.

c. 6.0 minimum sacks of cement per cubic yard. *

d. Maximum water to cement ratio of 0.40-0.45.

e. 4” maximum slump.

* For estimate only: to be determined by mix design.

4. Cement: All cement shall be Portland Cement conforming to ASTM C-150, Type II or V and shall be the product of one manufacturer.

5. Aggregates:

a. Shall conform to “Standard Specifications for Concrete Aggregates,” ASTM C33, except as modified herein.

b. Coarse Aggregate: Clean sound washed gravel or crushed rock. Crushing may constitute not more than 30% of the total coarse aggregate volume. Not more than 5% flat, thin, elongated or laminated material nor more than 1% deleterious material shall be present. 1" aggregate graded from 1/4” to 1”, fineness modulus 6.90 to 7.40. 1-1/2” graded from ½” to 1-1/2”, fineness modulus 7.80 to 8.20.

c. Fine Aggregate: Washed natural sand of hard, strong particles and shall contain not more than 1% of deleterious material, fineness modulus 2.65 to 3.05.

d. Aggregate must be certified, non-expansive from a “known” good source.

6. Water: ASTM C1602 Clean, fresh, free from acid, alkali, organic matter or other impurities liable to be detrimental to the concrete (potable).

7. Admixtures: Admixtures shall be used upon approval of the Owner's Representative.

a. Air-entraining admixture: Conform to ASTM C260.

b. Water-reducing admixture: Conform to ASTM C494.

B. Construction Joints: Use keyform for slab pour joints. Either preformed galvanized or PVC construction joint forms of a standard manufacturer may be used. Install per manufacturer's recommendations and tool edges of slabs.

C. Waterstops: PVC bulb-type for use between concrete pours / lifts, conforming with ASTM D 570, D 624, and D 638. Provide in configuration(s) as recommended by manufacturer for specific application. Greenstreak, W.R. Meadows, or approved equal.

D. Curing Materials:

1. Liquid Membrane (covered slab): Chlorinated rubber membrane forming, curing-sealing compound conforming to ASTM C309.

2. Liquid Membrane (exposed slab): Clear methyl and butyl methacrylate non-staining, membrane forming, curing-sealing compound conforming to ASTM C309.

E. Cement Grout and Drypack:

1. Cement Grout: Mix 1 part by volume of Portland Cement, 1/2 part by volume of water and fine aggregate enough to make mixture flow under its' own weight.

2. Drypack: Mix 1 part by volume of Portland Cement, 1/2 part by volume of water and fine aggregate enough to make a stiff mix that will mold into a ball. Mix no more than can be used in 30 minutes.

2.4 JOINT SEALANT MATERIALS

A. Caulking: Multipart, non-sag gun grade polyurethane based sealant meeting the requirements of ASTM C920-02, Type S or M, Mamemco International, Pecora, Sika Corp., Sonneborn Building Products, Tremco or approved equal. Self-leveling caulking materials are not allowed.

B. Primer: Non-staining type, recommended by sealant manufacturer to suit application.

C. Joint Cleaner: Non-corrosive and non-staining type, recommended by sealant manufacturer; compatible with joint forming materials.

D. Sealant Backer Rod: Provide compressible polyethylene or polyurethane backer rod as recommended by the sealant manufacturer.

E. Bond Breaker Tape: Provide polyethylene tape or other plastic tape as recommended by sealant manufacturer, to be applied to sealant-contact surfaces where bond to substrate or joint filler must be avoided for proper performance of sealant.

F. Sand: Cover the surface of the caulking with #30 silica sand.

2.5 OTHER MATERIALS

A. All other materials, not specifically described but required for proper completion of the work of this Section, shall be as selected by the Contractor subject to the advance review by the Owner’s Representative.

PART 3 - EXECUTION

3.1 SURFACE CONDITIONS

A. Inspection:

1. Prior to all Work of this Section, carefully inspect the installed Work of other trades and verify that all such Work is complete to the point where this installation may properly commence.

2. Verify that all Work may be constructed in accordance with all applicable codes and regulations, the referenced standards, the original design, and in accordance with site specific Geotechnical Report.

B. Discrepancies:

1. In the event of discrepancy, immediately notify the Owner’s Representative.

2. Do not proceed with installation in areas of discrepancy until all such discrepancies have been fully resolved.

3. Failure to notify the Owner's Representative and give written notice of discrepancies shall constitute acceptance by the Contractor of existing conditions as fit and proper to receive work.

3.2 CONCRETE FORMWORK

A. Construction of Forms:

1. General: Construct all required forms to be substantial, sufficiently tight to prevent leakage of concrete paste, and able to withstand excessive deflection when filled with wet concrete.

2. Layout:

   a. Form for all required cast-in-place concrete to the shapes, sizes, lines and dimensions indicated on the Drawings.

   b. Exercise particular care in the layout of forms to avoid necessity for cutting concrete after placement.

   c. Make proper provisions for all openings, offsets, recesses, anchorages, blocking and other features of the Work as shown or required.

   d. Perform all forming required for Work of other trades and do all cutting and repairing of forms required to permit such installation.

   e. Carefully examine the Drawings and Specifications and consult with other trades as required relative to providing for pipe and conduit penetrations, reglets, chases and other items in the forms.

3. Imbedded Items: Set all required steel frames, angles, bolts, inserts and other such items required to be anchored in the concrete prior to concrete being placed.

4. Bracings:

   a. Properly brace and tie the forms together so as to maintain position and shape and to ensure safety to workmen.

   b. Construct all bracing, supporting members and centering of ample size and strength to safely carry, without excessive deflection, all dead and live loads to which they may be subjected.

   c. Properly space the forms apart and securely tie them together, using metal spreader ties that give positive tying and accurate spreading.

5. Wetting: Keep forms sufficiently wetted to prevent joints from opening up before concrete is placed.

B. Plywood Forms:

1. Design: Nail the plywood panels directly to studs and apply in a manner to minimize the number of joints.

2. Joints: Make all panel joints tight butt joints with all edges true and square.

C. Footing Forms:

1. Wood Forms: All footing forms shall be wood unless otherwise specifically approved by the Owner's Representative, or as specified in paragraph 3.2(C)(2).

2. Earth Forms:

a. Side walls for footings may be of earth provided the soil will stand without caving and the sides of the bank are made with a neat cut to the minimum dimensions indicated on the Drawings.

b. For excavation and backfill of earth forms, conform with applicable provisions of Section 13 1101.

D. Reuse of Forms:

1. Reuse of forms shall be subject to advance approval of the Owner's Representative.

2. Except as specifically approved in advance by the Owner's Representative, reuse of forms shall in no way delay or change the schedule for placement of concrete from the schedule obtainable if all forms were new.

3. Except as specifically approved in advance by the Owner's Representative, reuse of forms shall in no way impart less structural stability to the forms nor less acceptable appearance to finished concrete.

E. Removal of Forms:

1. General:

a. In general, side forms of footings may be removed seven (7) days after placement of concrete, but time may be extended if deemed necessary by the Owner's Representative.

b. Forms for footings, foundations, grade beams, slabs, walls, and other formed concrete may be removed fourteen (14) days after placement of concrete.

2. Removal:

a. Use all means necessary to protect workers, passersby, the installed Work of other trades and the complete safety of the structure.

b. Cut nails and tie wires or form ties off flush, and leave all surfaces smooth and clean.

c. Remove metal spreader ties on exposed concrete by removing or snapping off inside the wall surface and pointing up and rubbing the resulting pockets to match the surrounding areas.

d. Flush all holes resulting from the use of spreader ties and sleeve nuts using water, and then solidly pack throughout the wall thickness with cement grout applied under pressure by means of a grouting gun; grout shall be one-part Portland Cement to 2-1/2 parts sand; apply grout immediately after removing forms.

3.3 CONCRETE REINFORCEMENT

A. Bending:

1. General:

a. Fabricate all reinforcement in strict accordance with the Drawings.

b. Do not use bars with kinks or bends not shown on the Drawings.

c. Do not bend or straighten steel in a manner that will injure the material. (When opposite end is already encased in concrete.)

2. Design:

a. Bend all bars cold.

b. Make bends for stirrups and ties around a pin having a diameter of not less than two (2) times the minimum thickness of the bar.

c. Make bends for other bars, including hooks, around a pin having a diameter of not less than six (6) times the minimum thickness of the bar.

B. Placing:

1. General: Before the start of concrete placement, accurately place all concrete reinforcement, positively securing and supporting by concrete blocks, metal chairs or spacers, or by metal hangers.

2. Clearance:

a. Preserve clear space between bars of not less than one and one-half (1-1/2) times the nominal diameter of the round bars.

b. In no case let the clear space be less than one and one-half (1-1/2) inches nor less than one and one-third (1-1/3) times the maximum size of the aggregate.

c. Provide the following minimum concrete covering of reinforcement:

1) Concrete deposited against earth: three (3) inches minimum.

2) Concrete below grade deposited against forms: two (2) inches minimum.

3) Concrete elsewhere: As indicated on Drawings or otherwise approved by the Owner’s Representative.

3. Splicing:

a. Horizontal Bars:

1) Place bars in horizontal members with minimum lap at splices sufficient to develop the strength of the bars.

2) Bars may be wired together at laps except at points of support of the member, at which points preserve clear space described above.

3) Whenever possible, stagger the splices of adjacent bars.

4) Splice forty (40) bar diameters minimum.

5) Provide non-contact lap slices for shotcrete.

b. Wire Fabric: Make all splices in wire fabric at least one and one-half (1-1/2) meshes wide.

c. Other Splices: Make only those other splices that are indicated on the Drawings or specifically approved by the Owner's Representative.

4. Dowels: Place all required steel dowels and securely anchor them into position before concrete is placed.

5. Obstructions: In the event conduits, piping, inserts, sleeves and other items interfere with placing reinforcement as indicated on the Drawings or otherwise required, immediately consult with the Owner's Representative and obtain approval of a new procedure prior to placing concrete.

C. Cleaning Reinforcement: Steel reinforcement, at the time concrete is placed around it, shall be free from rust scale, loose mill scale, oil, paint and all other coatings which will destroy or reduce the bond between steel and concrete. Bend down all tie wire away from the top of the pool concrete. Maintain a 2" clear from top of concrete to the tie wire.

3.4 SHOTCRETE REINFORCEMENT

A. The maximum size of reinforcement shall be No. 5 bars unless it can be demonstrated by preconstruction tests that adequate encasement of larger bars can be achieved. When No. 5 or smaller bars are used, there shall be a minimum clearance between parallel reinforcement bars of 2-1/2 inches (64 mm). When bars larger than No. 5 are permitted, there shall be a minimum clearance between parallel bars equal to six diameters of the bars uses. When two curtains of steel are provided, the curtain nearest the nozzle shall have a minimum spacing equal to 12 bar diameters and the remaining curtain shall have a minimum spacing of six bar diameters.

B. Lap splices in reinforcing bars shall be by the non-contact lap splice method with at least 2 inches clearance between bars. The enforcement agency may permit the use of contact lap splices when necessary for the support of the reinforcing provided it can be demonstrated by means of preconstruction testing, that adequate encasement of the bars at the splice can be achieved, and provided that the splices are placed so that a line through the center of the two spliced bars is perpendicular to the surface of the shotcrete work.

3.5 CAST-IN-PLACE CONCRETE

A. Conveying and Placing Concrete:

1. Before placing concrete, mixing and conveying equipment shall be well cleaned, and the forms and space to be occupied by concrete shall be thoroughly cleaned and wetted. Ground water shall be removed until the completion of the work.

2. No concrete shall be placed in any unit of work until all formwork has been completely constructed, all reinforcement has been secured in place, all items to be built into concrete are in place, and form ties at construction joints tightened.

3. Concrete shall be conveyed from mixer to place of final deposit in such a way to prevent the separation or loss of ingredients. It shall be placed as nearly as practicable in its' final position to avoid rehandling or flowing. Concrete shall not be dropped freely where reinforcing bars will cause segregation, nor shall it be dropped freely more than six (6) feet. Use tremies, spouts and dump boxes in deep sections. Vibrators are not acceptable for facilitating concrete transport.

4. Concrete shall be tamped and spaded to insure proper compaction into all parts of forms and around reinforcement. A mechanical vibrator shall be used to thoroughly compact the concrete. Vibration must be by direct action in the concrete and not against forms or reinforcement.

5. Mixing and transport time as indicated in ASTM C94 is required. If air temperatures are between 85° and 90° F the delivery time is to be reduced to 75 minutes. When air temperatures are in excess of 90° F the delivery time should be reduced to 60 minutes.

6. Truck mixes without batch certificates will be rejected.

B. Construction Joints / Expansion Joints: Construction joints and expansion joints shall be provided at locations and in the manner shown on the Drawings. With exception of existing concrete / new shotcrete joints, use PVC bulb-type waterstops appropriate for design condition between all concrete pours / lifts to avoid cold joints. Waterstops shall be placed in such a way to protect reinforcing steel from rust and oxidation. All expansion joints must be the full depth of the concrete section in which they are located.

C. Slab Finishes: Concrete slabs shall be compacted and screeded uniformly to grades shown. Push large aggregates below the surface with a screen tamper, screed and bull float. As soon as the surface becomes workable, it shall be wood floated, then finished as indicated on the Drawings to a uniform smooth, true surface in a neat and workmanlike manner. Carefully coordinate slab finish requirements with other trades (ceramic tile, pool plaster) to ensure concrete finish is appropriate substrate for final finish material.

1. Pool Floor Slab: Heavy Wire Broom Finish.

D. Protection and Curing:

1. Concrete shall be protected from injurious action of the elements and defacement of any nature during construction.

2. All forms must be kept wet to prevent drying out of the concrete.

3. All concrete surfaces including footings must be kept wet for at least seven (7) days after concrete is placed.

4. Apply the appropriate curing materials, as specified in 2.3 of this Section, immediately after finishing slabs. Application shall be as specified by the manufacturer.

E. Form Removal:

1. Take care in removing forms so that surfaces are not marred or gouged and that corners are true, sharp and unbroken.

2. No steel spreaders, ties or other metal shall project from or be visible on any concrete surfaces.

F. Defective Work:

1. Should the strength of any concrete for any portion of the work indicated by tests of molded cylinders and core tests fall below minimum 28 days strength specified or indicated, concrete will be deemed defective work and shall be replaced.

2. Concrete work that is not formed as indicated, is not true to intended alignment, not plumb or level where so intended, not true to intended grades or elevations, not true to specified or selected finish, contains sawdust shavings, wood, or embedded debris, which exhibits cracks or contains fine or coarse sulfide particles, or expansive aggregates detrimental to performance or appearance of the concrete shall be deemed defective.

3. Promptly perform work required to replace and properly clean (by sandblasting if necessary) any defective concrete panels (control joint or expansion joint to control joint or expansion joint), at Contractor's expense, including all expense of additional inspection, tests, or supervision made necessary as a result of defective concrete.

3.6 EXPANSION JOINTS

A. Temperatures: Do not install sealants when air temperature is less than 40°F.

B. Tooling: Tool exposed joints to a slightly concave surface using slicking materials recommended by the manufacturer. The tooling procedure shall press sealant against the sides of the joint. No materials shall be left “feathered” out or smeared on the abutting materials. Completed joints shall have a uniform professional appearance.

C. Joint Construction: Sealant joint width, thickness and cross-sectional profile to be constructed in strict accordance with the sealant manufacturer’s recommendations.

D. Sand: At the appropriate time cover the sealant with sand to provide a sanded finish.

3.7 CLEAN-UP

A. Upon completion of the Work of this Section, immediately remove all swimming pool concrete materials, debris and rubbish occasioned by this Work to the approval of the Owner’s Representative.

END OF SECTION

SECTION 13 1103
SWIMMING POOL SHOTCRETE

PART 1 - GENERAL

1.1 WORK INCLUDED

A. Provide labor, materials and equipment as required to install wet mix shotcrete for swimming pool structures as indicated on the Drawings and herein specified.

1.2 QUALITY ASSURANCE

A. Qualifications of Workers:

1. The entity performing the work of this Section shall have been successfully engaged in the respective trade for at least five (5) years immediately prior to commencement of the Work.

2. For actual construction operations, use only trained and experienced workers with a minimum of three (3) years experience with the materials and methods specified.

3. Provide at least one person who shall be present at all times during execution of the work of this Section, with a minimum of five (5) years experience with the type of materials being installed, the referenced standards, and who shall direct all Work performed under this Section.

B. Standards: Except as otherwise indicated, provide shotcrete per American Concrete Institute Standard ACI 506. In addition, conform to recommendations contained in “Shotcrete,” Brochure G-84 as published by the Gunite Contractors Association, Sylmar, California and the 2019 California Building Code. Comply with CBC 2019 Section 1908A.

C. Mix Design: The Contractor shall submit a mix design stamped and signed by a licensed engineer for approval by the Owner’s Representative prior to any placement of shotcrete. Mix design shall indicate source of aggregate and brands of cement and admixtures used. All mix designs shall take character of locally available aggregate into consideration and make adjustments as necessary to conform with specified design criteria.

D. Testing and Inspection: A test panel shall be shot, cured, cored or sawn, examined and tested (representing the most congested and difficult project scenario) prior to commencement of the project in accordance with ASTM C1140. All project conditions and personnel shall be represented in the test panel. Additionally, one test panel shall be provided for each 50 yards (or portion thereof) of shotcrete placed for each day or each nozzleman, whichever is greater. The size of the strength test panel shall be per the direction of the Special Shotcrete Inspector. At least three (3) cores shall be taken from each test panel. (At least three (3) cores shall be taken from the completed work for each day of shotcrete operation.) Testing shall be performed by the Owner’s designated Testing Lab and comply with Section 1908A.10, California Building Code. Continuous inspection of the shotcrete operation by a deputy inspector provided by the Owner shall be required. Inspection of shotcrete work shall comply with Section 1908A of California Building Code, and coring, sampling, soaking and testing per 1908A.5 and 1908A.10 of California Building Code. Contractor shall provide test panels for all required tests. The Contractor shall provide the Owner and Testing Lab 48 hours’ notice before the start of shotcrete operations

E. Tolerances: Construct all swimming pool shotcrete straight, true, plumb and square within a tolerance horizontally of one in 200 and a tolerance vertically of one in 2000.

1.3 SUBMITTALS AND SUBSTITUTIONS

A. Provide submittals in conformance with the requirements of Section 01 3300 and ACI 506.2.

B. Materials List: Within thirty (30) days after issuance of Notice to Proceed, and before shotcrete materials are delivered to the project site, submit to the Owner's Representative a complete list of materials proposed to be used in this portion of the Work, showing manufacturer's name and catalog number of all items such as admixtures and curing membranes, and the name and address of the supplier of cement and aggregate to be used.

C. Submit proof of qualifications as specified in Article 1.2.A of this Section.

1.4 PRODUCT HANDLING

A. Protection: Use all means necessary to protect shotcrete materials before, during and after installation and to protect the installed Work specified in other Sections.

B. Replacements: In the event of damage, immediately make all repairs and replacements necessary to the approval of the Owner's Representative and at no additional cost to the Owner.

PART 2 - PRODUCTS

2.1 MATERIALS

A. Cement: Cement shall be Type II Portland Cement conforming to ASTM C150. Cement type shall be the same for all shotcrete work.

B. Aggregate: ASTM C33, washed hard dense durable clean sharp sand from approved pit, free of organic matter and opaline, feldspar, or siliceous magnesium substances and containing not more than 3% by weight of deleterious substances. Maximum size aggregate for shotcrete is ¾" per CBC 1908A.3. When tested for organic impurities by ASTM C40 method, fine aggregate color not darker than reference standard color. When tested for soundness by ASTM C88 method, grading No. 2 of ASTM C1436, loss after 5 cycles not over 10% of fine aggregate.

C. Water: Potable, clean, fresh, free from acid, alkali, organic matter or other impurities liable to be detrimental to the shotcrete.

D. Admixtures: Admixtures shall conform to ASTM C1141 and only be used upon approval of the Owner's Representative.

PART 3 - EXECUTION

3.1 EXECUTION

A. Inspection:

1. Prior to all Work of this Section carefully inspect the installed Work of other trades and verify that all such Work is complete to the point where this installation may properly commence.

2. Verify that items to be imbedded in shotcrete are in place and that shotcrete may be placed to the lines and elevations shown on the Drawings, with all required clearance from reinforcement.

B. Discrepancies:

1. In the event of discrepancy, immediately notify the Owner's Representative.

2. Do not proceed with installation in areas of discrepancy until all such discrepancies have been fully resolved.

3. Failure to notify the Owner's Representative and give written notice of discrepancies shall constitute acceptance by the Contractor of existing conditions as fit and proper to receive the Work.

3.2 PREPARATION

A. General:

1. Thoroughly clean all areas where shotcrete is to be placed to insure proper bonding of shotcrete.

2. Where shotcrete is to be placed against smooth surfaces (i.e., cast-in-place concrete), sandblast surfaces to receive shotcrete to provide clean aggregate surface, thereby insuring proper bond between materials.

B. Ground Wires: Adequate ground wires, to be used as screeds, shall be installed to establish the thickness and surface planes of the shotcrete work. Ground wires shall be placed so that they are tight and true to line and grade and in such a manner that they can be easily tightened.

3.3 PROPORTIONING AND MIXING

A. Accurately control proportion of water to Portland cement to produce thorough and uniform hydration of the shotcrete that, when shot, forms a homogeneous mass containing neither sags nor dry sand formation. Proportion by mass per ASTM C94 or by volume per ASTM C685.

B. Shotcrete shall have a minimum compressive strength of 4,000 PSI at 28 days. Shotcrete material shall have a water/cement ratio of 0.40-0.45 per ACI 506R, Chapter 6, Proportioning and Preconstruction Testing; Section 6.3.3, Wet Mix Process.

C. Discontinue shotcrete work if the time between the addition of mixing water to cement and aggregate, or cement to aggregates, and placement of shotcrete exceeds ninety (90) minutes when the ambient temperature is below 85 degrees Fahrenheit, or exceeds sixty (60) minutes when the ambient temperature is above 85 degrees Fahrenheit. Batch, mix and deliver wet-mixture shotcrete per ASTM C94 or C685.

D. Hot Weather Shotcreting – Unless otherwise specified, do not place shotcrete when shotcrete temperature is above 95°F, unless prequalification testing shows that the required quality of materials can be achieved at high temperatures. The temperature of reinforcement and receiving surfaces shall be below 90°F prior to shotcrete placement.

E. Cold Weather Shotcreting – Unless otherwise specified, shooting may proceed when ambient temperature is 40°F and rising. Stop shooting when ambient temperature is 40°F and falling, unless measures are taken to protect the shotcrete. Shotcrete material temperature, when shot, shall not be less than 50°F. Do not place against frozen surfaces

3.4 SHOTCRETE PLACING, FINISHING, AND CURING

A. Operations: Utilize a standard type of air compressor, capable of providing a minimum of 250 cubic feet of air per minute per nozzle.

B. Placing: Except when shooting reinforcing, hold the nozzle perpendicular to and 2-1/2 to 3 feet from surface. At reinforcing bars, hold the nozzle so as to direct shotcrete behind the bars, and shoot each side of each bars separately. A nozzleman's helper equipped with an air jet shall precede the nozzle and blow out rebound or sand lodged behind bars, on forms, or placed shotcrete. Placing shotcrete horizontal members from the top is not allowed unless approved methods are employed to eliminate all rebound. Material shall emerge from the nozzle in a uniform flow. If flow becomes intermittent for any reason, direct the nozzle away from the surface until the flow is again steady and constant. Do not reuse rebound or loose sand for any purpose.

C. Puddled Shotcrete: Use of "puddled shotcrete" in which the air pressure is reduced and the water content is increased to facilitate placing in difficult locations is not allowed. Do not place shotcrete where nozzle stream cannot impinge directly on the involved surface. Where difficult shooting conditions occur, obtain proper results by maintaining correct air pressure and water ratio and reduce supply of material.

D. Construction Joints: Form joints with sloping beveled edges. Clean and dampen the hardened joint surfaces before placing additional shotcrete. Square edged construction joints are not allowed. The film of laitance which forms on the surface of the shotcrete shall be removed within approximately two hours after application by brushing with a stiff broom. If this film is not removed within two hours, it shall be removed by thorough wire brushing or sand blasting. Construction joints over eight hours old shall be thoroughly cleaned with air and water prior to receiving shotcrete.

E. Finishing: Rod exposed surfaces to true planes and lines on reaching the thickness and plane established by forms and ground wires. Tamp and wood float surfaces level and provide a rough raked finish. Carefully coordinate finish requirements with other trades (ceramic tile, pool plaster) to insure shotcrete finish is appropriate substrate for final finish material.

F. Curing: Keep shotcrete continuously damp for not less than seven (7) days after placing. Use sealed curing sheeting or other approved curing method where water curing is not feasible. Do not use curing compound of any kind.

3.5 DEFECTIVE WORK

A. Cut out, remove and replace, or repair to the satisfaction of the Owner's Representative, shotcrete not meeting minimum strength, not true, plumb or level, not to required elevations, containing cracks detrimental to performance or appearance, containing shavings, debris or with honeycombs or voids.

B. Promptly perform Work required to repair, patch, replace, render properly cleaned surfaces (by sandblasting if necessary) or otherwise make good any defective shotcrete at Contractor's expense, including all expense of additional inspection, tests, or supervision made necessary as a result of defective shotcrete.

3.6 CLEAN-UP

A. Upon completion of the Work of this Section, immediately remove all swimming pool shotcrete materials, debris and rubbish occasioned by this work to the approval of the Owner's Representative.

END OF SECTION

SECTION 13 1104
SWIMMING POOL CERAMIC TILE

PART 1 - GENERAL

1.1 WORK INCLUDED

A. Swimming pool ceramic tile detailed on the Drawings, including, but not limited to, the following:

1. Waterline Face Tile. (Deep Gutter Pool)

2. Gutter Cap Tile. (Deep Gutter Pool)

3. Lane Line / Target Tile / 4'-6" Depth Tile

4. Depth Marker Tile. (At Cantilever Deck)

5. Depth / Caution Marker Tile. (At Deep Gutter Pool Deck)

6. Trim Tile (at Steps.)

1.2 QUALITY ASSURANCE

A. Qualifications of Workers:

1. The entity performing the work of this Section shall have been successfully engaged in the respective trade for at least five (5) years immediately prior to commencement of the Work.

2. For actual construction operations, use only trained and experienced workers with a minimum of three (3) years experience with the materials and methods specified.

3. Provide at least one person who shall be present at all times during execution of the work of this Section, with a minimum of five (5) years experience with the type of materials being installed, the referenced standards, and who shall direct all Work performed under this Section.

B. Standards: In addition to complying with all pertinent codes and regulations:

1. Manufacture of all tile shall be in accordance with ANSI A-137.1.

2. Install ceramic tile in accordance with the recommendations contained in the 2021 "Handbook for Ceramic Tile Installation" of the Tile Council of America, Inc.

C. Tolerances: Install all swimming pool ceramic tile straight, true, plumb and square within a tolerance horizontally of one in 200 and a tolerance vertically of one in 500. Waterline and gutter bullnose tile shall be level to 1/8" (+/- 1/16") around entire perimeter of swimming pools.

1.3 SUBMITTALS AND SUBSTITUTIONS

A. Provide submittals in conformance with the requirements of Section 01 3300.

B. Samples: Submit samples of each color and pattern in the specified groups. Character samples can be representative for review prior to screening of actual tile.

C. Master Grade Certificate: Prior to opening ceramic tile containers, submit a Master Grade Certificate, signed by the manufacturer of the tile used and issued when the shipment is made, stating the grade, kind of tile, identification marks for the tile containers, and the name and location of the Project.

D. Specifications: Submit manufacturer's recommended installation specifications for the Work.

E. Submit proof of qualifications as specified in Article 1.2.A of this Section.

1.4 PRODUCT HANDLING

A. Delivery: Deliver all materials to the Project Site in the manufacturer’s original unopened containers with all labels intact and legible.

B. Storage: Store all materials under cover in a manner to prevent damage and contamination, and store only the specified materials at the Project site.

C. Protection: Use all means necessary to protect swimming pool ceramic tile before, during and after installation and to protect the installed Work specified in other Sections.

D. Replacements: In the event of damage, immediately make all repairs and replacements necessary to the approval of the Owner’s Representative.

PART 2 - PRODUCTS

2.1 TILE

A. A. Waterline Face Tile: (Deep Gutter Pool)

1. Material: All waterline face tile shall be glazed ceramic tile (Group III standard) as manufactured by Dal-Tile or approved equal.

2. Size: 6 x 6 inches.

3. Color: Dal-Tile #O-129, 'Sky Blue'. Contact Kylee Midura kylee.midura@daltile.com (858) 344-0019.

B. Gutter Cap Tile: (Deep Gutter Pool)

1. Material: All gutter cap tile shall be glazed ceramic tile (Group III standard) as manufactured by Dal-Tile or approved equal.

2. Size: 2-1/2 x 6 inches (#A-7250).

3. Color: Dal-Tile #D-129, 'Sky Blue'.

C. Lane Line / Target / 4’ - 6” Depth Tile:

1. Material: Group 3 quality, frost proof unglazed ceramic mosaic tile with absorption rate of less than 1% as manufactured by Dal-Tile or approved equal.

2. Size: 1 x 1 inches.

3. Color: Dal-Tile #D-311, 'Black/ in 25-yard direction and D-621 ‘Nautical Blue’ at 4’-6” depth tile.

D. Depth Marker Tile (At Cantilever Deck Face):

1. Material: All depth marker tile shall be glazed ceramic tile as manufactured and/or distributed by Dal-Tile, Precision Tile Co., or approved equal.

2. Size: 4-1/4 x 4-1/4 inches.

3. Color: Dal-Tile #X-114, 'Desert Gray' with Black silk screen numbers.

E. Depth / Caution Marker Tile (at deep gutter pool deck):

1. Material: Group 3 quality, frost proof unglazed ceramic mosaic tile with absorption rate of less than 1% as manufactured by Dal-Tile or approved equal.

2. Size: 1 x 1 inches.

3. Color: Dal-Tile #D-311, 'Black' letters and numbers on #D-014, ' Light Gray' field.

F. Trim Tile (on underwater steps):

1. Material: Group 3 quality, frost proof unglazed ceramic mosaic tile with absorption rate of less than 1% as manufactured by Dal-Tile or approved equal.

2. Size: 1 x 1 inches with S-812 quarter round. Color: Dale-Tile #D-311. ‘Black’.

3. Size 2 x 6 inches with integral quarter round. Color: Black, non-slip. Inlays #CPC00022.

2.2 MORTAR

A. Laticrete 3701 fortified mortar #LCR-37-1017.

B. Site mortar mix shall comply with ASTM C270 standards.

1. Sand for Mortar: Comply with requirements of fine aggregate for concrete.

2. Cement: Type 1 portland cement, conforming to ASTM C150.

3. Hydrated Lime: Conforming to ASTM C206 or 207, Type S.

4. Water: From a potable source.

C. Water: From a potable source.

D. Mortar shall meet ASTM C627

2.3 THIN SET MORTAR

A. Laticrete 254 Platinum, Laticrete, Custom or equal.

B. Water: From a potable source.

C. Mortar shall meet ASTM C627 standard.

2.4 GROUT

A. All tile grout shall be waterproof grout complying with the recommendations of TCA and ANSI A118.6 (4) standards. Grout color shall be grey for dark backgrounds, white for light backgrounds (verify colors with Architect).

2.5 OTHER MATERIALS

A. All other materials, not specifically described but required for a complete and proper installation of ceramic tile as indicated on the Drawings, shall be new, first quality of their respective kinds, and subject to the approval of the Owner's Representative.

PART 3 - EXECUTION

3.1 SURFACE CONDITIONS

A. Inspection:

1. Prior to all Work of this Section, carefully inspect the installed Work of other trades and verify that all such Work is complete to the point where this installation may properly commence.

2. Verify that ceramic tile can be installed in accordance with the original design and all referenced standards.

B. Discrepancies:

1. In the event of discrepancy, immediately notify the Owner's Representative.

2. Do not proceed with installation in areas of discrepancy until all such discrepancies have been fully resolved.

3. Failure to notify the Owner's Representative and give written notice of discrepancies shall constitute acceptance by the Contractor of existing conditions as fit and proper to receive its Work.

3.2 INSTALLATION

A. Method:

1. Install all ceramic tile in strict accordance with installation method P601-90 of the 2021 Handbook for Ceramic Tile Installation of the Tile Council of America, Inc.

2. Be certain to install all ceramic tile perfectly level, flush, plumb, and to the finish grades and elevations indicated on the Drawings.

B. Interface:

1. Carefully establish and follow the required horizontal and vertical elevations to insure proper and adequate space for the work and materials of other trades.

2. Coordinate and cooperate as required with other trades to insure proper and adequate interface of ceramic tile Work with the Work of other trades.

3.3 GROUTING

A. Follow grout manufacturer's recommendations as to grouting procedures and precautions.

B. Remove all grout haze, observing grout manufacturer's recommendations as to use of acid and chemical cleaners.

3.4 EXTRA STOCK

A. Provide one (1) unopened box of extra tile for 2.1A, 2.1B, and 2.1C for Owners use at a future time.

3.5 CLEAN-UP

A. Upon completion of the swimming pool ceramic tile installation, thoroughly clean and polish the exposed surfaces of tile work. Completely clean work area of debris and rubbish occasioned by this Work and dispose of to the approval of the Owner’s Representative.

END OF SECTION

SECTION 13 1106
SWIMMING POOL EQUIPMENT

PART 1 - GENERAL

1.1 WORK INCLUDED

A. Swimming pool equipment items required for this Work as indicated on the Drawings and specified herein.

1.2 QUALITY ASSURANCE

A. Qualifications of Workers:

1. The entity performing the work of this Section shall have been successfully engaged in the respective trade for at least five (5) years immediately prior to commencement of the Work.
2. For actual construction operations, use only trained and experienced workers with a minimum of three (3) years' experience with the materials and methods specified.
3. Provide at least one person who shall be present at all times during execution of the work of this Section, with a minimum of five (5) years' experience with the type of materials being installed, the referenced standards, and who shall direct all Work performed under this Section.

B. All equipment supplied or work performed shall comply with regulations governing public swimming pools and spas as contained within Chapter 31 of the 2019 California Building Code.

1.3 SUBMITTALS AND SUBSTITUTIONS

A. Provide submittals in conformance with the requirements of Section 01 3300.

B. Required submittals include:

1. Swimming Pool Safety Equipment and Maintenance Equipment as specified in Article 2.1 and 2.2 of this Section.
2. Swimming Pool Fittings, Deck and Mechanical Equipment as specified in Article 2.3-2.21 of this Section.

C. Submit proof of qualifications as specified in Article 1.2.A of this Section.

D. The equipment shown on the plans represent the first listed items in the technical specifications. The Contractor shall be responsible for all required field coordination and installation of any approved equal product to provide a fully working and warranted system. The Contractor shall submit detailed shop drawings for any products used other than the first listed specified items. Contractor provided shop drawings shall include details and quality equal to the original plans and construction documents. The Contractor shall provide any and all required engineering including but not limited to structural and anchorage requirements for any proposed equipment other than the first listed specified equipment. The Contractor is responsible to provide a factory certified representative(s) to start-up and provide on-site training for all swimming pool mechanical equipment provided.

1.4 PRODUCT HANDLING

A. Protection: Use all means necessary to protect swimming pool equipment items before, during and after installation and to protect the installed work specified in other Sections.

B. Replacements: In the event of damage, immediately make all repairs and replacements necessary to the approval of the Owner's Representative.

PART 2 - PRODUCTS

2.1 SAFETY EQUIPMENT

A. First Aid Kit for 50 Persons with two (2) wool blankets: Marine Rescue or approved equal. Quantity as required by the Department of Health, one (1) minimum.

B. Rescue Tubes (minimum 49" long) and Life Ring Buoy (minimum 24" in diameter) U.S. Coast Guard Approved: Marine Rescue or approved equal. Quantity as required by the Department of Health, one (1) minimum.

C. Throw Rope (3/16" diameter) complete with lemon foot, for use with Life Ring Buoy: Kiefer, United Industries, or approved equal. Quantity as required by the Department of Health, two (2) minimum.

D. Rescue Hooks, 16' long x 1-1/2" aluminum pole and stainless-steel mounting hardware: Kiefer, Pentair, or approved equal. Quantity as required by the Department of Health, two (2) minimum.

E. Pool Safety Signs: As required by the Department of Health. Submittal required. Placement at the pool site shall be in conformance with Health Department Inspector. One (1) set minimum.

F. Eyewash / Shower: Haws model #8309WC CRP combination eyewash / shower, with corrosion resistant protection. Two (2) required. See MEP sheets for water supply piping.

2.2 MAINTENANCE EQUIPMENT

A. Commercial Pool Vacuum: Provide pool vacuum cart with lid-mounted handle, separate lid-mounted bracket for electrical cord, and two rubber-tired ball bearing wheels with grease fittings. Cart and filter shall be fabricated from schedule 304 stainless steel with welds treated and passified. Provide an all-bronze pump with a 1 1/2 hp, 115/230 volt, maximum 20 amp draw @ 120 volts, single phase motor and a 6" bronze trap. Pump shall be UL and NSF listed, have 2" suction and 1 1/2" discharge fittings, and have a brass priming valve with hose bib. Entire pump assembly shall be anchored to vacuum cart with two stainless steel bolts. Provide a 100 foot 10 AWG 3/C SJ electrical cord with ground fault interrupter (GFI) plus. Cord shall be wired to a double pole, 30-amp switch which shall be mounted on pump motor. One (1) required.

B. Heavy Duty Vacuum Hose: 2" x 50', with hose connector. Pentair, Smooth Bore or approved equal. Two (2) required.

C. Utility Pole: 24' fiberglass with connectors. Pentair, Skimlite or approved equal. Two (2) required.

D. Commercial Vacuum Head: 24" wide "flexible" vacuum head. Pentair Model #R201186, or approved equal. One (1) required.

E. Pool Wall Brush: 36" wide professional quality. Pentair or approved equal. One (1) required.

F. Leaf Skimmer: 30" x 8" x 12", professional quality. Pentair, Spectrum or approved equal. One (1) required.

G. Water Quality Test Kit, Professional Grade, Taylor Technologies Model #1741C, LaMotte Model #PRO250-NJ, or approved equal. One (1) required.

H. Chain Hoist Trolley: 'OZ' Wheeled hoist trolley for circulation pump maintaince. Minimum 1 ton lifting capacity with lifting eye. Contractor to coordinate trolley track size with Structural lifting beam over circulation pump pit. One (1) required.

I. Manual Chain Hoist: 'OZ' Manual powered Chain hoist with 1 ton lifting capacity with 10' lift capacity. Provide extra-long lifting chain and hoist control chain, one (1) required.

2.3 FITTINGS

A. Main Drain Frame & Grate (18" x 36"): Lawson Aquatics #MLD-FG-1836, Super Sump with VGB Compliant Grates, or approved equal, two (2) required. Provide two (2) Hayward #SP-1056 1-1/2" collector tubes and two (2) #SP-1055 Hayward 1-1/2" hydrostatic relief valve, one per main drain sump. Contractor shall provide to the Owner a Certificate of Compliance, signed by a licensed design professional, for main drain sump(s) and frame(s) and grate(s), as required by the Virginia Graeme Baker Act.

B. Gutter Outlet Frame and Grate (12"x12"): Lawson Aquatics #MLD-FGD-1212. Eighteen (18) required.

C. Floor Return Inlet 1-1/2" Adjustable: StaRite #08417-0000, United Industries, or approved equal. Fifty-four (54) required.

D. Swimming Pool Underwater Lights: J & J Electronics 'PureWhite LED' #LPL-F5W-120-100 (100' cord) with polished stainless-steel face rings, 87-watt lamps and LWC, provide stainless steel light niches, #78210600 with 1" rear hubs, 'Pentair' or approved equal. Thirty (30) required.

E. Junction Box for Underwater Lights, complete with strain reliefs: Hydrel #1719, Appleton, or approved equal. Sixteen (16) required.

2.4 DECK EQUIPMENT

A. Starting Platform Anchors: Spectrum Aquatics Xcellerator anchors, 6" deep, no known equal. Eight (8) required, for concrete deck. Complete with cover for dual wedge and cover removal tool, two (2) required.

B. Adjustable Starting Platforms: 'Spectrum Aquatics' Xcellerator DP #138900 or approved equal. Color of top shall be blue. Eight (8) required.

C. Stanchion Sockets: 1.90" I.D. Bronze. KDI-Paragon 38201TC, no known equal. Twelve (12) required.

D. Stanchion Posts: 1.90" O.D. x .145 wall. KDI-Paragon, Eight (8) #38106, and Eight (8) #38301, no known equal.

E. Lane Line Anchors: Heavy eye bolt with insert. KDI-Paragon #73017/18 or equal. Twenty-two (22) required.

F. Racing Lanes: Anti Wave' maximum 6", no known equal, verify colors with Owner prior to ordering. Nine (9) required. Provide vinyl covered stainless steel lane line extensions, Knorr System model #EP-009-0020 or approved equal, two (2) per lane line. Provide two (2) additional lanes to be utilized for stationary water polo course.

G. Racing Lane Reel with Cover: KDI-Paragon #75111SS with cover #75133, no known equal. Two (2) required.

H. Lifeguard Chair: 1.90" O.D. x .065 wall. Spectrum Aquatics Economy Guard Chair. SS tread. Custom with 3" x 8" cedar slats. Two (2) required. Specify product from 'Pentair' as modified lifeguard chair for City of Los Angeles drawing number 007 revision F. Dated 4/18/2017.

I. Figure 4 Grab Rails/Cross Braced Ladder: KDI-Paragon #30102, 1.90" O.D. x .109" wall, no known equal. Six (6) sets required. KDI-Paragon #42123 with custom 5" wide stair treads, one (1) required.

J. Recessed Steps, Set of 3: KDI-Paragon #3212, no known equal. Six (6) sets of three required.

K. Handrail: KDI Paragon #34203, 3 bend, 1.90" O.D. x 0.65" wall. Six (6) required.

L. Anchor Sockets for Grab Rails & Handrails: KDI-Paragon 28102, no known equal. Thirty-eight (38) required.

M. Stainless Steel Escutcheon Plates for Grab Rails, Handrails and Ladders: Spectrum Model #35214, no known equal. Thirty-eight (38) required.

N. Stationary Water Polo Goals: KDI-Paragon 36104, 36201, no known equal. Furnish complete with anchors and nets. One (1) pair required.

O. Disabled Lift: Hydraulic self-operable with 350 lb. lifting capacity and 12" water draft; with headrest, dual flip-up armrests, pull-out leg rest, submergible push-button remote control, lockable cover; transport cart, extra battery, wall mount charger and 5 year manufacturer warranty (contractor to confirm unit meets appropriate local government agency ADA requirements); furnish with deck anchors and deck hydrant. Spectrum Gallatin #27336 or approved equal. One (1) required.

P. Backstroke Pennants: 'Champion' 3/16" diameter vinyl coated cable #50-175; 'Champion' hardware package #53-030, and 'Champion' 12" x 18" vinyl coated polyester pennants #53-020 Lincoln Equipment, Knorr Systems or equal.

Q. 1 Meter Diving Stand: Arcadia Air Products 'Durafirm' #70-231-400, Knorr Pool Systems or equal. Furnish complete with anchors with stainless steel bolts, and mounting hardware. One (1) required.

R. 16 Foot Diving Board: Duraflex International Corporation, 'Maxiflex B' #66-231-330, Knorr Pool Systems or equal. Furnish complete with jury rig poles. One (1) required.

S. Pool Cover System:

1. A pool cover system as described below shall be provided and shall include all the specified features, without exception. Submittal data must include complete documentation relating to all the specified features and include manufacturer's sales literature, specification sheets, and installation/operation/maintenance manuals. Upon written request by the specifying agent, the following samples must be provided: samples of tubing used for storage reel winding tubes and end frames; a sample winding tube bearing; a sample castor wheel assembly; and a cover sample measuring at least 8" x 11", including weighted side edge, reinforced end edge, and grommet.
2. Cover Material:

    a. Material shall be woven, 10 by 10 count per inch, high-density polyethylene, ultraviolet stabilized film fabric, laminated to both sides of 1/8" thick, closed cell, medium density, white, polyethylene foam. The woven polyethylene film fabric shall be coated on both sides with an ultraviolet stabilized, chemically resistant polyethylene coating. The combination of film, foam and woven components shall be non-toxic, non-absorbent, non-permeable and buoyant. Color shall be blue on upper surface and black on under surface. In addition to the above, cover must meet the following requirements:

Thickness	1/8-inch minus or plus 10%
Foam Density	2 lbs. per cubic foot
Weight	5 oz. per square foot
*Tensile Strength	318 lbs. (ASTM 1682264)
*Tear Strength	60 lbs. (ASTM D2261-71)
*Bursting Strength: (Mullen Tester)	425 psi (ASTM 751-73)
Service Temperature	-40°F to +160°F
K Factor	.25 BTU/sq. ft.-Hr – degrees F/inch (ASTM D2326)
Reinforced Edge Tear Strength	1225 lbs. pull strength, corner to corner
Open Seam Tear Strength	70 lbs.

3. Cover Design Criteria:

    a. Cover panels shall totally cover the surface of the pool without gaps or overlaps with reinforced cutouts to accommodate rounded corners, step areas, rails, etc. Cover panels shall be of the following quantities and sizes:

Qty.	Size
9	13 feet, 4 inch x 75 feet, 1 inch

    b. Along end and side edges of each panel, a weighted material shall be sewn in and shall be continuous, non-corrosive and conform to the flat shape of the cover. End edges shall be reinforced with a double layer of polyethylene-coated film fabric and designed in such a manner as to prevent panels from dividing when the covers are being pulled across the water. On all corners, weighted edge shall wrap corners and be itself encapsulated by the two layers of end reinforcement. The entire corner construction shall be reinforced with an 1/8" thick load dispersion plate and non-corrosive grommet.

    c. Both ends of each cover panel shall be equipped with no less than three (3) non-corrosive grommets and quick-release loops for easy connection to the storage reel or to the next cover panel. All sewing shall be ultra-violet stabilized and

chemically resistant 100% polyester thread. Main body seams shall be welded, glued or heat sealed. Complete mechanical attachment with lock-stitched thread shall be required. Warning labels consistent with the recommendations of the Federal Consumer Protection Agency shall be permanently affixed to each end of each cover panel and to the sides of perimeter panels.

4. Storage Reels:

   a. The following quantity, type, and size of storage reels shall be provided:

Qty.	Winding Tubes Per Reel	Length of Winding Tubes
3	3	16 Foot

   b. Storage reel frame, winding tubes, castors, brake shafts, cranks and fasteners shall be made of type 304 stainless steel. Each reel shall have six wheels, each of which shall be 6 inches in diameter, be rated at 1150 pounds load capacity and be made of solid polyurethane. Wheels shall be lubricateable through grease fittings on stainless steel axle shafts and have stainless steel swivel yoke assemblies. The reel shall have two frame mounted, screw-type brakes with pads that lock directly to the pool deck and have a total of 18 square inches of total braking surface. Castor brakes or other types of foot-operated or lever-operated brakes will not be considered equal. Each winding tube shall be 4 1/2 inches in diameter; have a wall thickness of .120 inches; and shall consist of continuous length of tubing without joints or welds. Reels with tubes fabricated from two or more pieces of tubing joined together will not be acceptable. End frames shall be fabricated from 1 1/2-inch square Schedule 304 stainless steel box beam tubing with .120" wall thickness. To facilitate field repair, 3/8" stainless steel bolts, nuts and washers shall be used to connect major reel frame parts, wheels, brakes, bearings and winding tubes. Reels that use welding to connect these components will not be considered equal. Winding tube bearings shall be heavy duty, self-aligning, pillow block ball bearings with set screws to secure tube shafts and prevent their lateral movement. All bearings shall be lubricateable through grease fittings. Plastic surface bearings will not be acceptable.

   c. Each storage reel shall be provided with a protective cover constructed of vinyl-laminated polyester cloth, 1000 denier, totaling 13 ounces per square yard.

5. Measuring and Training:

   a. A representative of the manufacturer shall visit pool site to confirm measurements prior to fabrication of cover, and once cover is delivered, train operating personnel and supervise initial installation of cover.

6. Warranty:

   a. Cover panels shall be provided with manufacturer's three- year full replacement warranty covering defects in material and workmanship. Storage reel shall be provided with manufacturer's 10-year warranty covering defects in material and workmanship.

2.5 WET PLAY

A. Wet Play Safety Signs: As required by the Department of Health. Submittal required.

B. Wet Play Elements:

	PRODUCT CODE	QTY	TOTAL FLOW
1.	Waterbug N°2 'Vortex' VOR-7581	1	13 GPM
2.	Aqua Dome N°1 'Vortex' VOR-555	1	14 GPM
3.	Side Winder 'Vortex' VOR-7518	1	15 GPM
4.	Jet Stream 'Vortex' VOR-7512	4	12 GPM
5.	Fumbling Five 'Vortex' VOR-7384	1	12 GPM
6.	Water Tunne N°2 'Vortex' VOR-309	1	12 GPM
7.	Split Stream 'Vortex' VOR-7516	7	55 GPM
8.	Bollard Activator N°3 'Vortex' VOR-600	1	Total Flow 133 GPM
9.	Maintenance Minimizer 'Water Odyssey' WMM600	2	Total Flow 133 GPM

2.6 WET PLAY BOOSTER PUMP

A. 'Pentair' XFK-8, 2HP 208-230V/460V, 3PH, rated at 135 GPM at 50ft. TDH, with integral strainer, interconnect with water feature circulation pump. (Field verify motor voltage prior to ordering.) (58 lbs.) Provide motor stater/disconnect.

2.7 WET PLAY CIRCULATION PUMP

A. 'Pentair' WFK-12, Whisperflo pump rated at 143 GPM at 60 ft. TDH, 3,450 RPM 3HP, 208V 3PH, self-priming pump with integral strainer. One (1) total. Complete with time clock system. Interconnect circulation pump with booster pumps to only allow booster pump operation when circulation system is on. (58lbs.)

2.8 WET PLAY FILTER

A. 'Pentair' TR140-C-3 Hi-rate permanent media filters with 9.80 sq. ft. of filter area rated at 147 GPM at 15 GPM/Sq. ft. Complete with 3" pre-manufactured multi-port valve, 3" backwash, seismic anchorage. Provide all utilities, piping, valving, etc. One (1) total. (1,300 lbs.)

2.9 WET PLAY HEATER

A. 'Lochinvar' #ERN302, 300,000 BTU input, 3/4" natural gas connection, 2" water influent/effluent connections Copper Fin II and 5" direct air intake low and 6" sidewall exhaust above, in accordance with manufacturer's recommendations. One (1) total (210 lbs.) Heater shall have electronic ignition and external shut-off switch without adjusting thermostat setting.

2.10 WET PLAY WATER CHEMISTRY CONTROLLER

2.11 WET PLAY WATER CHEMISTRY CONTROLLER: PROVIDE ONE (1) CHEMTROL PC5000 WITH FLOW CELL,ORP SENSOR. PPM SENSOR, PROVIDE ETHERNET CONNCETION AND COMMNUCATION SOFTWAREWITH AUTODIAL ALARM, 4-20MV OUT[UT WITH CORRESPONDING INPUT SENSORS AND OUTPUT CONNCETION INCLUDING TANK SENSORS,TRANSDUCERS,RELAYS,VFD CONTROL.. ONE (1) TOTAL.

2.12 WET PLAY BOOSTER PUMP ULTRA VIOLET SYSTEM:

2.13 WET PLAY ULTRA VIOLET SYSTEM: 'AQUIONICS I-100+ 176 GPM VALIDATED FOR OUTDOOR/CAPACITY,INCREASE TO 4" FLANGED CONNECTION IN-LINE UV. 1.3 KW AT 208V 1 PH WITH 15' CABLE. 3 #10 WIRING WITH 20A EXTERNAL BREAKER. PROVIDE FLOOR MOUNTING. PROVIDE INSTALLATION AND PIPING PER MANUFACTURERS RECOMMENDATIONS INCLUDING PIPING BYPASS, STRAINER AND VALVING.

2.14 WET PLAY AUTOMATION

A. 'Vortex' command center including system controller, pit wall mounted water distribution manifolds, with ten (10) outlets, solenoid valves, one (1) dynamic bypass valve, isolation valves, bollard operated activation, complete. Contractor shall provide complete shop drawings for approval. Proivde water drain points adjacent to equipment area for all manifold lines.

2.15 WET PLAY FLOWMETER

A. 'Signet' #P51530-X0 flow sensor with 'Signet' #5090 flow monitor (mounted by door in mechanical room), 3" line size, NSF 50 listed.

2.16 SWIMMING POOL STRAINER

A. 'MerMade' F.O. series FRP reducing basket strainer: One (1) 10" x 8" standard, with acrylic lid and two (2) stainless steel strainers each (150 lbs.)

2.17 SWIMMING POOL CIRCULATION PUMP

A. 'SWIMMING POOL CIRCULATION PUMP: 'PACO' #6015-7, 6"x8"x15" TYPE 'LC' END SUCTION CENTRIFUGAL PUMP; 1150 RPM 460V, 3PH; 30HP; RATED AT 1,275 GPM @ 60 FT. TDH; 85% EFFICIENT; PREMIMUM EFFICIENCY TEFC MOTOR; EPOXY COAT ALL WET SURFACES. 'PACO', 'AURORA' OR EQUAL. (760 lbs.) PROVIDE 'PENTAIR ACCUDRIVE PUMP CONTROL SYSTEM VARIABLE SPEED DRIVE MODEL AD300-4603-N12FB WITH FULL BY PASS MODE AND 4-20Ma FLOWMETER KIT 97016-420KIT AND EXTENDED WARRANTY AD-EWW272 . COORDINATE MOUNTING LOCATION TO MAINTAIN DESIRED CLEARANCES, 460V 3PH. (122 lbs.)

B.

2.18 SWIMMING POOL FILTRATION SYSTEM (EKO^3, STARK OR EQUAL)

A. 'Stark' SS3-96-08 automatic filter control (AFC) fully automatic hi-rate permanent media filters with 81 sq. ft. of filter area rated at 1296 GPM at 16 GPM/sq. ft. Complete with 8" face piping, 6" backwash, seismic anchorage. Provide all utilities, piping, valving, etc. (9800 lbs. each tank) 'Stark', 'EPD', or equal. Provide 'Signet' #P51530-X1 flow sensor with 'Signet' #5090 flow monitor (mounted by door in mechanical room) and water chemistry controller digital readout.

2.19 POOL HEATER(S)

A. ‘Lochinvar’ Aquas high efficiency titanium pool package system Type XPN1502 1,449,877 BTU/hr output, 1½” gas connection, 6” water influent/effluent connections with isolations valves and 6” ø flue to atmosphere. Provide ¾” cold water connection. Two (2) total (1,192 lbs. each.) Provide thermometers on titanium heat exchanger influent/effluent lines.

2.20 CHLORINE FEED SYSTEM

A. CHLORINE STORAGE/FEED SYSTEM: PROVIDE 'CHEM-TAINER' 500 GALLON #TC5971DC-CA; DUAL STORAGE/CONTAINMENT TANK WITH LID SEISMICALLY RESTRAINED; OPERATING WEIGHT = (4,165lbs). COMPLIES WITH FED. REG #40CFR-264-193. SWIMMING POOL FEED PUMP SHALL BE “THE SOLUTION” 22152 011728GPD, WET PLAY FEED PUMP SHALL BE 'STENNER' 85M-5, 50 GPD @25 PSI WITH FRP SHELF BRACKETS. HARD PIPE TO POINT OF INJECTION.

2.21 ACID STORAGE/FEED SYSTEM

A. ACID STORAGE/FEED SYSTEM: PROVIDE 'CHEM-TAINER' 350 GALLON #TC 5256DC-CA; DUAL STORAGE/CONTAINMENT TANK WITH LID SEISMICALLY RESTRAINED; OPERATING WEIGHT =(3,250lbs). WET PLAY FEED PUMP= 'STENNER' 45M-5, 50 GPD @ 25 PSI WITH FRP SHELF BRACKETS. HARD PIPE TO POINT OF INJECTION. SWIMMING POOL ACID FEED ‘THE SOLUTION X2 #22152-02 WITH BOOSTER PUMP COMPLIES WITH FED. REG #40CFR-264-163. PROVIDE 60 GALLON ‘CHEMTAINER’ #TC 2342DC-CA; ACID VAPOR RECOVERY TANK (500 LBS.), ONE (1) TOTAL.

.

2.22 SWIMMING POOL WATER CHEMISTRY CONTROLLER

A. SWIMMING POOL WATER CHEMISTRY CONTROLLER: PROVIDE ETHERNET CONNECTION TO CHEMTROL PC7000 WITH FLOW CELL, ORP SENSOR, PPM SENSOR, FILTER CONTROL PANEL WITH GUAGES AND BACKWASH CONTROL SOLENOID VALCES AND MANUAL BACKWASH VALVE, COMMUNICATION SOFTWARE WITH AUOT DIAL ALARM 4-20 OUTPUT, CORRESPONDING INPUT SENSORES , OUTPUT CONNCETIONS, TANK SENSORS, TRANSDUCERS REALYS VFD CONTROL (1) ONE 'IMPACT', 'WALLACE & TIERNAN' OR APPROVED EQUAL.

1. The integrated equipment room control system shall provide continuous monitoring and control of sanitizers, oxidizers, pH, temperature, system flow rate monitoring, total dissolved solids (TDS), turbidity, chemical inventory levels, surge tank and backwash holding tank water levels, system pressures, and water chemistry balance calculations. The control system shall also provide automatic control of the filtration system including backwash operation. Installation of the system shall be per the manufacturer’s specification and no exceptions shall be allowed. A factory trained/authorized representative shall provide system commissioning and training to the owner.

B. Certifications

1. The controller shall carry the following product certifications:

a. UL 61010-1

b. (CSA) C22.2 Number 61010-1

c. European Union Low Voltage Directive 73/23/EEC EN 61010-1

C. Sensors

The controller shall include pH, ORP, ppm and temperature sensors meeting the following requirements:

1. pH sensor

a. The controller shall continuously monitor, display and data log pH with 0.1 or 0.01 resolution (programmable) and provide a measurement of pH by utilizing a sensor with the following characteristics:

1) 0 – 14 sensing range;

2) ABS body with ½" NPT process connection;

3) Minimum of 32 milliliters of inorganic electrolyte gel; organic electrolytes, susceptible to breakdown in the presence of strong oxidants, shall not be considered equal;

4) A porous Teflon liquid junction to provide a stable, low impedance reference contact, and to prevent fouling and clogging of the liquid junction;

5) A silver/silver chloride (Ag/AgCl) reference element;

6) A general purpose glass membrane pH sensing element;

7) Operating temperature range of 0 - 80 degrees C;

8) Operating pressure range of 0 - 100 psiG.

2. ORP / HRR sensor

a. The controller shall continuously monitor, display and data log ORP with 1mV resolution and provide a measurement of ORP by utilizing a sensor with the following characteristics:

1) -1000 to +1000mV sensing range;

2) ABS body with ½" NPT process connection;

3) Minimum of 32 milliliters of inorganic electrolyte gel; organic electrolytes, susceptible to breakdown in the presence of strong oxidants, shall not be considered equal;

4) A porous Teflon liquid junction to provide a stable, low impedance reference contact, and to prevent fouling and clogging of the liquid junction;

5) A silver/silver chloride (Ag/AgCl) reference element;

6) A solid platinum or solid gold ORP sensing element with a minimum of 1 cm^2 surface area; platinum-plated and gold-plated sensing elements, which are susceptible to abrasives, shall not be considered equal;

7) Operating temperature range of 0 - 80 degrees C;

8) Operating pressure range of 0 - 100 psig.

3. Amperometric (ppm) Sensor

a. The optional Free Chlorine sensor shall be an amperometric probe system with a measuring range of 0.05 to 20 mg/l with a fully selectable scale and a temperature range of 36°-113° Fahrenheit. The amperometric probe shall come with a PVC body, replaceable PTFE membrane and electrolyte, gold cathode and silver/ silver chloride anode.

4. Temperature Sensor

a. The controller shall continuously monitor, display and data log temperature with 1°F resolution and provide a measurement of water temperature by utilizing a sensor with the following characteristics:

1) 32 – 212°F (0 – 100°C) sensing range;

2) 2 wire, 100Ω resistive temperature detector (RTD) with an 0.00385 Alpha.

5. Flow Sensor

a. The controller shall continuously monitor, display and data log flow rate with 0.1 gpm resolution and shall provide a measurement of pool circulation flow rate and volume by utilizing a flow sensor with the following characteristics:

1) 0-8800 gpm (0-33265 liter/min) measuring range,

2) Paddle wheel flow sensor with a frequency output,

3) Dual O-ring seal,

4) 25-foot cable,

5) Iron pipe saddle,

6) Flow volume: 999 trillion gallons, 1-gallon resolution; 999 trillion liters, 1 liter resolution.

6. 4-20mA Sensor

a. The controller shall be capable of reading a total of eight (8) 4-20mA output sensors, including the following:

1) Pressure Transducers (Quantity 2)

The controller shall continuously monitor, display and data log pressure(s) with 1 psiG resolution and provide measurement of filter influent and/or filter

effluent pressure by utilizing pressure transducer(s) with the following characteristics:

a) 0 to 100 psiG measuring range,

b) < ± 2% span max @ 25° C which includes linearity, hysteresis and repeatability,

c) 0.25% static error band and 1.5% typical thermal error band,

d) Temperature compensated and fully calibrated,

e) Stainless steel wetted components with plumbing connections of 1/4".

2) Vacuum Transducer (Quantity 1)

The controller shall continuously monitor, display and data log vacuum(s) with 1 psiG resolution and provide measurement of strainer vacuum by utilizing a vacuum transducer with the following characteristics:

a) -15 to +85 psiG measuring range,

b) < ± 2% span max @ 25° C which includes linearity, hysteresis and repeatability,

c) 0.25% static error band and 1.5% typical thermal error band,

d) Temperature compensated and fully calibrated,

e) Stainless steel wetted components with plumbing connections of 1/4".

3) Liquid Level Sensors - Three (3) total

The controller shall provide measurement of liquid levels for surge tanks, backwash holding tanks and/or liquid chemical inventory by utilizing liquid level sensor(s) with the following characteristics:

a) Field configurable sensing range from 3 ft. to 16 ft.,

b) Field calibration for various tank levels, shapes and sizes,

c) Non-contacting sensing elements enclosed in PVC.

4) 4) Conductivity/TDS Sensor

The controller shall continuously monitor, display and data log conductivity/TDS with 1 micromho/ppm resolution and provide a measurement of conductivity/TDS by utilizing a sensor with the following characteristics:

a) 0-20,000 micromhos (0-10,000 ppm TDS) measuring range

b) A 316 stainless steel electrode,

c) PTFE insulator as well as a dual EPR O-ring seals,

d) AC operation, which resists electrode plating.

D. User Interface

1. Standard Display

The standard display shall be a backlit transflective LCD with 14-line x 40 alpha/numeric graphical characters that will continuously display information related to the following:

a. All installed sensor readings,

b. Set points, with current control status,

c. All active alarms, including time activated,

d. Smart menus w/ integrated on-screen help.

2. Contrast adjustment of the backlit LCD shall be provided through clearly marked keys on the front-panel without the need for access to internal controller circuitry. After initial adjustment, controller shall monitor internal temperature and automatically adjust contrast to prevent LCD blackout in extreme ambient temperature conditions. Controllers that do not include front-panel contrast adjustment and automatic temperature compensation shall not be considered equal.
3. The standard user interface shall include single-touch access to Set Points, Relay Modes, Calibrations, Backwash status and settings, Menu access, and Reset Fail/Safes. An alphanumeric keypad shall be provided for ease of system configuration.

E. Control Functions

1. Water Chemistry

a. pH Control: The controller shall continuously control pH. Chemical feed shall be configurable for feed-up, feed-down, or dual feed and either on/off or time-based proportional feed.

b. Sanitizer Control: The controller shall continuously control sanitizer based upon the ORP reading, the amperometric sensor, or both with a bracketed control program. Chemical feed shall be configurable for either on/off or time-based proportional feed.

c. Bracketed Sanitizer Control: With the amperometric ppm sensor, the controller shall be configurable for bracketed sanitizer control; The bracketed control algorithm shall allow either the ORP or ppm setpoint to be chosen as the primary control point, while using other parameter to create a secondary boundary (min and max settings) that must be maintained in addition to the primary control point.

d. Sanitizer Booster Feed: The controller shall have a sanitizer booster program with selectable ORP and/or ppm set points with separate ending set points, allowing the option of the booster sanitizer to control to a lower set point while the primary system can recovers.

e. Ozone/UV Control: The controller shall provide feed-up control of an ozone or UV system based upon ORP and/or ppm set points. A Fireman Cycle feature shall turn off the Ozone/UV relay 0 to 60 minutes (settable) prior to backwash initiation or recirculation pump shutdown. The Ozone/UV control algorithm shall include an Energy Conservation mode, with on/off set time and secondary set point.

f. Superchlorination: The controller shall have a programmable superchlorination function, based ORP or ppm superchlor setpoint, which is triggered manually.

g. Dechlorination: The controller shall have a programmable dechlorination function, based upon ORP or ppm dechlor setpoint, which is triggered either manually or by the completion of the superchlorination function.

h. LSI & RSI: The controller shall compute the Langelier Saturation Index and the Ryznar Saturation Index based upon current inputs and the Ca Hardness and Alkalinity entered by the operator.

i. Flow Monitoring: The controller shall continuously monitor, display, and data log system flow, maintaining a total flow volume. A low flow alarm shall be operator settable, which can be programmed to disable chemical feeds.

j. Heater Control: The controller shall perform on/off control of a heater based upon an operator settable temperature set point. A Fireman Cycle feature shall turn off the heater 0 to 60 minutes (settable) prior to recirculation pump shutdown. Heater control algorithm shall include an Energy Conservation mode, with on/off set time and secondary temperature set point.

k. Chemical Inventory Monitoring: The controller shall continuously monitor, display, and data log liquid pH adjuster and sanitizer inventory levels. The controller shall include low chemical level alarm points for each chemical being monitored.

l. Backwash tank Monitoring: The controller shall continuously monitor, display, and data log backwash holding tank levels.

m. Surge tank Monitoring: The controller shall continuously monitor, display, and data log surge tank levels.

n. Autofill: The controller shall automatically control a water makeup relay to add makeup water to maintain pool level set point, based upon surge tanks (or equivalent) level, with an overfill delay feature. The controller shall provide a programmable alternate set point (4 event 28-day timer). Use in conjunction with 3” valve specified in Section 13157 2.03G

o. Sensor Wash: The controller shall include a programmable sensor wash with start and end time, feed duration, and number of cycle to allow multiple feed cycles per day.

F. Energy Conservation

1. Alternate Setpoints: The controller shall have alternate Sanitizer, Heater, and Autofill setpoints, based upon a 4 event 28-day timer.
2. Energy Conservation Mode: The controller shall have the capability to disable all mechanical and chemical functions during programmed conservation cycle. The Energy

Conservation Mode shall include the ability to periodically monitor and satisfy all operation requirements based upon a programmed time schedule.

G. Automatic Backwash

1. Backwash Initiation: The controller shall be user configurable to initiate backwash upon any of the following conditions:

   a. Time, based upon a 24-hour, 7-day programmable calendar,

   b. Pressure Differential, taken from either a pressure differential switch or an operator settable low pressure differential setpoint based upon the differential between two installed pressure transducers,

   c. Low System Flow, an operator settable low flow set point based upon the installed system flow meter,

   d. Totalized filter water volume, an operator settable totalized filter water volume set point based upon the total system flow maintained by the controller from the installed system flow meter,

   e. High filter effluent turbidity, an operator settable turbidity set point based upon the installed turbidity sensor,

   f. Manual, which only initiates backwash when manually activated by operator.

2. Normal Operation: The controller shall be capable of controlling the backwash operation of up to 16 filters, with the following backwash features included as part of normal programming.

   a. Inhibit Period, Operator settable daily time period during which backwash is prevented from being triggered.

   b. Backwash Frequency Fail Safe: Prevents an automatically triggered backwash from starting within this time period from the end of the previous backwash. Does not prevent a Manual initiation of backwash.

   c. Fireman Cycles: The controller shall provide operator settable independent Fireman Cycle settings for the Heater and Ozone/UV controls. The controller shall automatically delay the start of the backwash operation until the Heater and Ozone/UV controls have been deactivated and the corresponding Fireman Cycles have expired.

   d. Primary/Priority Valve Management: Primary/Priority valve control closes a Primary/Priority valve during backwash of a filter to increase the flow through the filter being backwashed.

   e. Alternate Lead Filter, in multiple filter systems, the controller shall automatically alternate the lead filter in each successive backwash cycle, in order to assure an effective full backwash of all filters in the system.

   f. Backwash duration: Operator settable length of time to backwash each filter.

g. Dwell Time: Operator settable length of time to delay after each filter is backwashed.

3. Backwash Holding Tank Management: The controller shall be capable of monitoring the backwash holding tank to prevent overflow, by adjusting the backwash cycle as follows:

a. Suspend backwash when the holding tank is full, allowing time for the holding tank to drain.

b. Automatically resume backwash when the holding tank is empty.

c. An operator settable timeout which monitors the amount of time the backwash holding tank takes to drain. If this timeout is exceeded, a limit timer alarm is activated and the backwash cycle cancelled.

4. Advanced Backwash Optimization: The controller shall be capable of the following advanced features as part of the normal backwash programming:

a. Backwash accessory: Turns on an additional relay before, during, and/or after backwash operations based upon operator settable parameters; useful for sites where application of a dechlorination agent to backwash water (holding tank) is required.

b. Water Saving (Turbidity): The controller shall be capable of monitoring backwash effluent turbidity and ending a filter backwash early upon reaching a desired turbidity set point.

c. Filter Isolation: During backwash suspension due to full backwash holding tank, allows suspended filter to be isolated from the system rather than being returned to filter mode. This prevents the filter bed from recompacting, making the resumed backwash rapidly effective. Requires properly equipped filters.

H. Main Recirculation Pump

1. On/Off Control with Relay:

Controller shall provide the capability to interface to and control a recirculation pump with a programmable relay. The controller shall include the following capabilities, available as appropriate based upon installed sensors and implemented features:

a. Fireman Switch: The following events shall satisfy Fireman Switch timing requirements prior to turning off recirculation pump:

1) Backwash Operations

2) Energy Conservation mode (24 hr., 7-day function)

3) Manual off

b. Immediate: The following events immediately turn off recirculation pump, regardless of Fireman Switch timing requirements:

1) Surge Tank Level Low Alarm: Turn off pump immediately (surge tank is almost empty)

2) Strainer Vacuum High Alarm: Turn off pump immediately (possible entrapment)

3) Emergency shutdown, triggered by front-panel Emergency Off: Turn off pump immediately (per Operator)

I. Total Dynamic Head (TDH)

1. Controller shall provide the capability to continuously monitor the Total Dynamic Head (TDH) of the main recirculation pump, directly calculated by the controller from recirculation pump influent vacuum and filter influent pressure transducers. TDH shall be displayed on the user interface and recorded in data logs, with user-programmable High and Low TDH Alarm settings.

J. Control Outputs

1. Relay Outputs - Solid-State Relays:

a. The controller shall come with a total of 4 integral line or dry contact 5A solid-state relay outputs capable of switching 3A under all normal operating conditions, accounting for the effects of the temperature gradient inside the NEMA 4X enclosure. Systems that utilize relays that are not de-rated must submit an engineering evaluation justifying the use of relays at their full, optimal-condition capacity.

2. Mechanical Relays - The controller shall come with a total of 3 mechanical relays:

a. 1 integral 8A dry contact mechanical relay, and

b. 4 integral 3A dry contact or line powered mechanical relays.

c. Since mechanical relays have the inherent risk of failing in the closed (active) position, as a safety measure the controller shall preclude the ability to assign any of the integral mechanical relays to chemical feed functions. Systems that do not preclude mechanical relays from being configured for chemical feeds shall not be considered equal.

3. Expansion Relay Outputs

a. The controller shall be capable of expanding the number of relay outputs available by adding up to 3 expansion modules in any combination.

K. Solid-State Relay Expansion Modules

1. Each Solid-State Relay Expansion Module provides 5 integral 5A solid state dry contact or line powered relays capable of switching 3A under all normal operating conditions. Systems that utilize relays that are not de-rated must submit an engineering evaluation justifying the use of relays at their full, optimal-condition capacity.

L. Mechanical Relay Expansion Modules

1. Each Mechanical Relay Expansion Module provides 5 integral mechanical relays:

a. 1 integral 8A dry contact mechanical relay, and

b. 4 integral 3A dry contact or line powered mechanical relays.

c. Since mechanical relays have the inherent risk of failing in the closed (active) position, as a safety measure the controller shall preclude the ability to assign any of the integral mechanical relays to chemical feed functions. Systems that do not preclude mechanical relays from being configured for chemical feeds shall not be considered equal.

M. Safety Features

1. Manual-On limit

a. The controller shall have built-in limits to the amount of time any relay control output may be forced on (i.e. in “Manual On” mode). This is an important safety feature to prevent control outputs from inadvertently being left forced on after service or diagnostics.

2. High/Low Alarm Settings & Control Lockouts

a. The controller shall have programmable high and low alarm settings for pH, ORP, PPM, temperature, low flow & no flow and chemical overfeed, turbidity, pressure & vacuum, surge tank levels, chemical inventory.

b. The controller shall have a programmable lockout of sanitizer feed upon pH high or low alarm.

3. No Flow Alarm & Flow Restored Delay

a. The controller shall activate a No Flow alarm when the dedicated sample stream flow switch indicates there is insufficient flow through the sample stream. This No Flow alarm shall lockout all chemical feed control operations.

b. The controller shall include a Flow Restored Delay, which shall extend the No Flow lockout user-programmable amount of time after the No Flow alarm ends (i.e. flow is restored). This feature is necessary to assure that the system has valid, stable sensor readings of circulating water prior to making chemical feed control decisions.

c. Feed Limit Alarms

d. The controller shall trigger a Failsafe alarm if a chemical feed relay remains on longer than the programmable Feed Limit Timer. Chemical feeds shall automatically be disabled if the corresponding reading goes into a Failsafe alarm condition.

4. Emergency Off

a. The controller shall have a dedicated Emergency Off button on the front panel of the system, which immediately halts all chemical feeds and control outputs when pressed. This feature shall be password protectable, which shall require entry of one of the Security passwords.

5. Safety Shield

a. The controller shall include a safety shield or other mechanism for allowing fuse replacement without access to high voltage circuitry or wiring.

N. Security

1. The controller shall have three security password levels: six for operators, two for managers and one for the distributor providing for a history of access identified by the user.

O. Data Logging

1. The controller shall have 512K battery backed-up RAM for input level recording and events. All input level shall be recorded for 10 to 56 days depending on sample rate (2to 10 minutes).
2. The controller shall record and maintain the latest 1100 events over a maximum of 14 days recording all alarms, parameter changes, user logins, and operational cycles related to all control features

P. Local Alarms / Indicators

1. The controller shall signal all alarm conditions with the following indicators:

a. A bright red flashing LED on the front of the controller,

b. Activation of a master alarm signal provided as a dry contact relay enabling the use of 0-240 VAC alarms, and each active alarm listed on the LCD display along with time activated.

Q. Remote Communication, Access and Alarm Notification

1. Ethernet

a. The controller shall come with a standard, integral 100BaseT Ethernet connection. The controller shall be capable of providing Remote Access via PC with Ethernet connection and Alarm Notification via email or text message via an Ethernet connection to the Internet.

R. Enclosure

1. The controller shall be housed in a NEMA 4X polycarbonate enclosure.

S. Flow Cell

1. PVC flow cell

a. The flowcell shall have a PVC body with two ½" NPT ports for pH and ORP sensors, two ¼"NPT ports for temperature sensor and sensor wash acid injection, and a clear acrylic front viewing window. The flowcell design shall provide precise sample flow rate and water velocity regulation past the probes. The flowcell shall come provided with PVC ½" isolation ball valves, PVC ¼" wet test valve and standard reed or optional rotary flow switch.

b. Each flowcell shall be equipped with a pressure-sensing device. The pressure sensor shall consist of a compound pressure/vacuum gauge manufactured in

stainless steel, 2 ½" diameter, liquid filled with an operating pressure range of 0 to 60 psig and vacuum of 0 to –30 in./ Hg.

T. Packaged System Enclosure

1. The equipment room controller and flowcell with sensors shall be mounted onto a 3/8" thick PVC backplate. The flowcell shall be completely assembled and reading for integration into the plumbing.

U. AC Surge Suppression

1. An integrated solid-state devise shall be furnished to protect each mechanical room control system from excessive line voltage at controller.
2. Device shall be housed in a tamper proof enclosure provided with mounting tabs and have ½" NPT hardwire connection, with LED indicator light, UL listed.

V. Commissioning / Start-Up, Warranty and Manuals

1. Controller and sensing probes (ORP, pH, ppm) shall be covered by a standard manufacturer's 5-year warranty. Manufacturer's representative shall provide a complete set of new probes on the fifth year of operation.
2. The control system shall be provided with on-site start-up, on-site operator training, and 2 years on-site warranty service performed by a factory trained and certified representative of the controller manufacturer.
3. Manufacturer's representative shall supply an Operator's Manual describing system features and operating instructions.

PART 3 - EXECUTION

3.1 SURFACE CONDITIONS

A. Inspection:

1. Prior to installing the items of this Section, carefully inspect the installed Work of other trades and verify that all such Work is complete to the point where this installation may properly commence.
2. Verify that the swimming pool equipment items may be installed in strict accordance with original design, pertinent codes and regulations, and the manufacturers' recommendations.

B. Discrepancies:

1. In the event of discrepancy, immediately notify the Owner's Representative's Representative.
2. Do not proceed with installation in areas of discrepancy until all such discrepancies are fully resolved.
3. Failure to notify the Owner's Representative's Representative and give written notice of discrepancies shall constitute acceptance by the Installer of existing conditions as fit and proper to receive its Work.

3.2 INSTALLATION

A. Supply and install items of swimming pool equipment in strict accordance with applicable codes and regulations, the original design, and the manufacturer's published recommendations, anchoring firmly and securely for long life under hard use.

B. Coordinate with other trades to insure all imbedded items are set plumb and flush. Railing ends must have anchor sockets and escutcheon plates. Be certain that deck equipment and railings are properly bonded prior to imbedding.

C. All equipment shall be braced and/or anchored to resist a horizontal force acting in any direction using the criteria shown on the Drawings.

3.3 INSTRUCTION

A. The Contractor shall provide a factory certified representative(s) to start-up and certify proper installation, operation and full warranty status of all swimming pool mechanical equipment. The Contractor shall provide not less than two 8-hour days of on-site training for facility staff in the operation and maintenance of the swimming pool mechanical equipment and systems. The two 8-hour days shall be separated by a minimum of seven calendar days and be completed within the 14-day start-up period.

3.4 EQUIPMENT ACTIVATION

A. All water chemistry and filtration mechanical equipment shall be operational upon filling of pool after plaster. Chemicals and other related support items as supplied by Contractor, shall be in supply at start-up.

B. For the first fourteen (14) calendar days after completion of the pool plaster, brush all plastered surfaces at least twice a day and coordinate with General Contractor to ensure that the plaster is carefully maintained after the initial fourteen-day period. In addition, coordinate with the Contractor to ensure that pool filtration equipment is continuously running during the initial fourteen-day period.

C. Start-up and provide qualified personnel to operate pool equipment for a period not less than fourteen (14) days after the pool is placed in operation, or until the Owner takes occupancy of the facility or letter of substantial completion. During this time, Contractor shall instruct and supervise the Owner's personnel in the various operating and maintenance techniques involved. Contractor shall be responsible for supply of chemicals during this not less than fourteen (14) day period and at time of turnover to Owner, chemical storage tanks shall be full. (Owner's personnel shall be fully trained and capable of assuming swimming pool maintenance tasks, training may begin before Owner takes occupancy).

3.5 CLEAN-UP

A. Upon completion of swimming pool equipment, remove all debris, materials and equipment occasioned by this Work to the approval of the Owner’s Representative’s Representative.

END OF SECTION

SECTION 13 1107
SWIMMING POOL MECHANICAL

PART 1 - GENERAL

1.1 WORK INCLUDED

A. Swimming pool mechanical piping as indicated on the Drawings for circulation and filtration systems, pool water heating systems, chemical control systems, booster pump systems and appurtenances.

B. Domestic water system from points of connection within swimming pool mechanical equipment room to make-up water system.

C. Filter backwash piping to point of connection with backwash retention pit as required.

1.2 QUALITY ASSURANCE

A. Qualifications of Workers:

1. The entity performing the work of this Section shall have been successfully engaged in the respective trade for at least five (5) years immediately prior to commencement of the Work.

2. For actual construction operations, use only trained and experienced workers with a minimum of three (3) years experience with the materials and methods specified.

3. Provide at least one person who shall be present at all times during execution of the work of this Section, with a minimum of five (5) years experience with the type of materials being installed, the referenced standards, and who shall direct all Work performed under this Section.

B. Standards:

1. All equipment supplied or work performed shall comply with Chapter 31B of the 2019 California Building Code.

2. Work shall be performed in accordance with the applicable editions of all National, State and local codes, laws, regulations and ordinances, including the following:

a. American National Standards Institute (ANSI).

b. American Society for Testing Materials (ASTM).

c. American Waterworks Association (AWWA).

d. American Welding Society (AWS).

3. Do not construe anything in the Drawings or Specifications to permit Work not conforming to these requirements.

1.3 SUBMITTALS AND SUBSTITUTIONS

A. Provide submittals in conformance with the requirements of Section 01 3300.

B. Required submittals include:

1. Pipe and Fittings as specified in Article 2.2 of this Section.

2. Valves as specified in Article 2.3 of this Section.

3. Pressure / Vacuum Gauges as specified in Article 2.4 of this Section.

4. Pipe Hangers and Supports as specified in Article 2.5 of this Section.

5. Sleeves and Waterstops as specified in Article 2.6 of this Section.

C. Submit proof of qualifications as specified in Article 1.2.A of this Section.

1.4 PRODUCT HANDLING

A. Delivery: Deliver all materials to the Project Site in the manufacturer's original unopened containers with all labels intact and legible.

B. Storage: Store all materials under cover in a manner to prevent damage and contamination, and store only the specified materials at the Project site.

C. Protection: Use all means necessary to protect swimming pool mechanical items before, during and after installation and to protect the installed Work specified in other Sections.

D. Replacements: In the event of damage, immediately make all repairs and replacements necessary to the approval of the Owner's Representative and at no additional cost to the Owner.

1.5 JOB CONDITIONS

A. Cooperate with entities performing Work specified in other Sections to so that no conflict of new construction or occupied space may occur. Should any installation Work be done without such craft coordination, that Work so installed shall be removed and re-installed.

PART 2 - PRODUCTS

2.1 PRODUCT QUALITY

A. Materials and equipment shall be new, of the best quality for the purpose intended, and shall be clearly marked with the manufacturer's name and nameplate data or stamp and rating. As far as practicable, materials and equipment shall be of one manufacturer.

2.2 PIPE AND FITTINGS

A. PVC Schedule 40: Type 1, normal impact, NSF approved for solvent welding applications, ASTM Specification D-1785, color shall be white. Dura, Lasco, or approved equal.

B. PVC Schedule 80: Type 1, normal impact, NSF approved for solvent welding applications, ASTM Specification D-1785, color shall be gray. Dura, Lasco, or approved equal.

C. CPVC Schedule 80 Influent/Effluent Heating Piping: Type 1, normal impact, NSF approved for solvent welding applications, ASTM Specification D-1785, color shall be gray. Dura, Lasco, or approved equal.

D. PVC DR25: Conforming to ATSM D-1784, use with epoxy coated bell and spigot-type fittings or epoxy coated mechanical joint by flange adapters with epoxy coated cast iron fittings as specified in Article 2.02 (F), below. Johns-Manville "Big Blue", Diamond Plastics, or approved equal.

E. Copper Tubing: ASTM Specification B-88, hard drawn, with ANSI Standard B16.22 wrot copper fittings.

F. Steel: ASTM Specification A-120, Schedule 40 black or galvanized pipe with ASTM A-47 150 lb. banded malleable iron threaded fittings.

G. Cast Iron: ASTM Specification B16.1, cast iron flanged fittings, provide epoxy coating as required for use with chlorinated water.

2.3 VALVES

A. Ball Valves:

1. For pool system: True-Union design, PTFE seat material with FPM or FKM Double O-ring stem seals, locking handle, NSF certified. PVC schedule 80 body for below grade installation. PVC Schedule 80 body for above grade installation. Furnish ball valves on all pipe diameters 2½" or less with a rating of at least 200psi at 73°F. Asahi, Ipex, or Nibco.

2. For copper pipe system: 3-piece full-port Bronze body valve with Teflon seat, 'Apollo', 'Nibco' or approved equal.

B. Butterfly Valves:

1. Epoxy coated cast or ductile iron body, 316 stainless steel disc and stem, viton seat material, furnish hand wheel/gear operators on all valves 8" and larger. DeZurick, Keystone, or Ipex.

2. PVC body, PVC disc and EPDM construction suitable for chlorinated water applications. Stem shall be of 316 stainless steel and non-wetted. Valves shall be self-gasketed design with a convex sealing arrangement. Valves 1-1/2" – 10" shall be rated to 150 psi and 12" valves shall be rated to 100 psi at 70°F. Asahi Pool-Pro, no known equal.

C. Check Valves: Wafer-type, epoxy coated cast or ductile iron body, 316 stainless steel plates and shaft, viton seat material. Centerline, Metraflex, or approved equal.

D. Surge Chamber Float Valve: EPD #2-0020-230 Float Control Valve, 10"-line size, as manufactured by Environmental Products Division of Doughboy Recreational, Rancho Cucamonga, CA, no known equal.

E. Surge Chamber Isolation Valve: Butterfly valve, tapped lug style, bronze body, stainless steel stem, bronze disc, phenolic back-up ring, EPT seat material. Provide stainless steel shaft

extension, shaft housing and tool operator located 2'-0" above floor level with deck access grate as required. DeZurick, Keystone, Asahi, Spears, Ipex or approved equal.

F. RP Backflow Preventer: Febco #835-B for 2" and smaller; #825 for 2-1/2" and larger. Febco, Watts, or approved equal.

G. Swimming Pool Make-up Water Control: 3" 'Cla-Val' fill system to include 3" 'Cla-Val' solenoid control valve #136-01BY, 3" ductile iron, epoxy coated body with cast iron disc retainer and diaphragm washer, bronze trim, flanged globe pattern, 120V at 60 Hz. Solenoid wiring shall be wired to water chemistry controller. Provide 6" air gap at fill point.

H. Wet Play Fill System: 1" 'Cla-Val' fill system to include 1" 'Cla-Val' solenoid control valve #136-01BY, 1" duct iron, epoxy coated body with cast iron disc retainer and diaphragm washer, bronze trim, flanged globe pattern, 120V at 60 hz. Solenoid wiring shall be wired to water chemistry controller. Provide 2" air gap at fill point.

2.4 PRESSURE / VACUUM GAUGES

A. Furnish and install pressure and vacuum gauges on the discharge and suction sides of all pumps. 2" or 2 ½" dial, bottom connection, chrome ring, shut-off cock and snubber. Ranges shall be selected to indicate between mid-point and two-thirds of maximum range under design conditions. Marsh, Trerice, or approved equal.

2.5 PIPE HANGERS AND SUPPORTS

A. General:

1. The requirements of this Section relates to various requirements of the Agreement, General and Supplementary Conditions, Specifications, Drawings, and modifying documents which are part of the Construction Contract. Responsibility for coordination of all such applicable requirements will be that of the Contractor.

B. Description:

1. This section provides guidelines and limitations for the support of all mechanical, electrical, plumbing or architectural items from the building structure, and for the seismic bracing of such items.

2. Design and install all support and bracing systems as required for the swimming pool systems. Provide for attachment to portions of the building structure capable of bearing the loads imposed. Design these systems to not overstress the building structure.

C. Quality Assurance:

1. Design and install all support systems to comply with the requirements of the 2019 California Building Code, Chapter 16A.

2. Seismic bracing is to be designed by a professional engineer licensed in the State of California.

3. For the seismic bracing of mechanical, electrical and plumbing system, refer to "Guidelines for Seismic Restraints of Mechanical Systems and Plumbing Piping Systems"

by Sheet Metal and Air Conditioning Contractors National Association, Inc., (SMACNA) for guidelines.

D. Submittals:

1. Submit shop drawings for all substructures and attachment methods.

2. Submit proposed alternative methods of attachment for review and approval by the Architects, prior to deviating from the requirements given below.

3. For all pipe hangers and support systems, submit structural calculations and details which include all resultant forces applied to the building structure and are prepared and signed by the Contractor’s licensed California professional engineer. Calculations will be reviewed for compliance with design criteria, not for arithmetic.

E. Materials:

1. Use Kin-Line, Grinnel, or approved equal.

2. Support all pipelines individually with hangers, each branch having at least one hanger. Lateral brace as noted and required.

3. Support piping near floor with steel stanchions welded to end plates secured to pipe and floor.

4. Support vertical piping at each floor level. Install coupling in piping at each support. Coupling shall rest on and transmit load to support. Isolate copper from steel supports with vinyl electrician's tape around pipe and coupling.

5. Use Stoneman "Trisolator," Unistrut, or approved equal, isolators at each hanger and other support points on bare copper tubing system.

6. For PVC pipe, space hangers four (4) feet apart for pipe sizes 1" and under, five (5) feet apart for pipe sizes 1-1/4" to 2", and six (6) feet apart for pipe sizes over 2". Space hangers for horizontal pipes at a maximum of six (6) feet for copper 2" and smaller and for steel 1-1/4" and smaller; ten (10) feet for copper 2-1/2" and larger and for steel 1-1/2" and larger.

7. Size hanger rods, screws, bolts, nuts, etc., according to manufacturer's sizing charts.

8. Trapeze hangers may be used for parallel lines.

9. Use galvanized or cadmium plated hangers, attachments, rods, nuts, bolts, and other accessories in pool mechanical room, high humidity areas, or where exposed to weather. Hot dip galvanize all items which are not factory furnished. Plating for hinged movements must be done at the factory.

10. Lateral Bracing: To prevent swaying of the piping systems, provide angle iron bracing and anchor into wall or overhead framing. Piping shall be braced or anchored in such a way as to resist a horizontal force of 50% of its operating weight in any direction.

11. Do not use wire or other makeshift devices for hangers.

12. Furnish all substructures and fasteners required to comply with the limitations given below. Use material as specified in the various sections and as appropriate to their use.

F. Guidelines & Limitations:

1. Each Contractor will coordinate the load requirements from all subcontractors so that no combination of loads overstresses the building structure or exceed the limitations given below.

2. Concrete Structure:

a. Support all loads hung from concrete structure with cast-in-place inserts, unless drilled-in anchors are specifically approved in writing prior to placing the concrete.

b. Concrete anchors must not penetrate into reinforcing bars. Where the anchors boring indicates the presence of reinforcing bar, patch hole with an epoxy type grout and relocate anchor 12 diameters away.

c. Individual expansion anchors cannot support any loads greater than 300 pounds or manufacturer's specified load capacity without approval.

3. Steel Structure:

a. Hang no more than 20 pounds per metal deck rib in any span.

b. At beams, hang all beam loads greater than 40 pounds concentric to beam, not off the flanges.

c. Attached no loads to the beams or girders greater than the following without specific approval from the architect;

1) Roof beams and girders: 300-pound point load or 600-pound total load for a single span.

G. Seismic Bracing:

1. Design and install seismic bracing to not ground out vibration and sound isolation systems.

2. All items of mechanical and electrical equipment 60" or more in height are to be seismically braced whether such bracing is shown or not.

2.6 SLEEVES AND WATERSTOPS

A. Provide sleeves where work of this Section passes through fire rated partitions, floors and ceilings, concrete slabs or exterior of structure. Caulk clearance space using sealant appropriate for application in conformance with manufacturer's recommendations and Title 24 of California Code of Regulations. 3m, Dow Corning, or approved equal. In lieu of sleeves and caulking, "Link Seal" products may be used.

B. Provide prefabricated waterstops as indicated on the Drawings at all pipe penetrations through structures containing stored water (i.e., swimming pools, balance/surge tanks, etc.) to insure leak-proof seals.

PART 3 - EXECUTION

3.1 SURFACE CONDITIONS

A. Inspection:

1. Prior to Work of this Section, carefully inspect the installed Work of other trades and verify that such work is complete to the point where this installation may properly commence.

2. Verify that items of this Section may be installed in accordance with the original design and referenced standards.

B. B. Discrepancies:

1. In the event of discrepancy, immediately notify the Owner's Representative.

2. Do not proceed with installation in areas of discrepancy until all such discrepancies have been fully resolved.

3. Failure to notify the Owner's Representative and give written notice of discrepancies shall constitute acceptance by the Contractor of existing conditions as fit and proper to receive his work.

3.2 ABBREVIATIONS AND SYMBOLS

A. Abbreviations and symbols on the Drawings are those most commonly used. Obtain clarification from the Owner's Representative on any questionable items before bid.

3.3 GENERAL PIPING REQUIREMENTS

A. Size any section of pipe for which size is not indicated or any intermediate section erroneously shown undersized the same size as the largest pipe connecting to it. Sizes listed are nominal.

B. Cut pipe accurately to job measurements and install without springing or forcing, true to line and grade, generally square with building and/or structures and adequately supported to prevent undue stress on pipe, fittings and accessories.

C. Make changes of direction with manufactured fittings. Street ells, bushings, reducing flanges, close nipples or bending of pipe is not allowed.

D. Use great care to install piping in accordance with best practice. Plastic pipe shall be "snaked" in trenches to allow for thermal expansion.

E. All above grade, below grade and buried or imbedded PVC shall be installed using solvent weld fittings. Also, each and every fitting and pipe end shall be prepared with solvent primer. Fittings shall be joined individually and with enough time between assembly of adjacent joints to allow them to seal solidly. After joining, an even ring of primer must be visible around the entire fitting. If any fittings are installed without visible primer, the fitting shall be removed and discarded and piping recut, rechamfered and joint made up again using a new fitting. All procedures, methods and techniques used to make up solvent weld joints shall be in strict accordance with manufacturer's recommendations.

F. Arrange pipe and hangers to allow for expansion, contraction and structural settlement. No pipe shall contact structure except penetrations as shown on the Drawings.

G. Provide dielectric connections between copper and dissimilar metals. In copper systems, threaded piping. Including connections to equipment shall be brass pipe and fittings. Install dielectric connections in vertical sections of piping only.

H. Run pipe full size through shut-off valves, balancing valves, etc. Change pipe size within three (3) pipe diameters of final connection to control valves, fixtures and other equipment.

I. Provide unions or flanges at connections to equipment, on service side of valves and elsewhere as required to facilitate ease of maintenance.

J. Locate equipment shut-off valves as close to equipment as possible maintaining easy valve access.

K. Make all connections between domestic water systems and equipment or face piping with approved backflow prevention devices as required.

L. All PVC pipe exposed to direct sunlight shall be painted with two coats of Exterior Acrylic Semi-Gloss Paint, Sherwin Williams or equal. Color to be selected by the Architect. Prior to painting the PVC pipes, the exterior of all PVC pipes shall be wiped with Methyl Ethyl Ketone, or an approved equal, to remove the glaze from the pipes.

M. The Main Drain pipe must run either level or uphill from the main drain sump, through the surge pit (if applicable) and then to the circulation pump.

3.4 TRENCH EXCAVATION AND BACKFILL

A. Excavation:

1. Excavate and backfill trenches as required for the Work of this Section. Conform to requirements of Section 131101.

2. The Contractor shall perform all excavation of every description and of whatever materials encountered, to the depths indicated on the Drawings or as necessary. The Contractor shall dispose of the excavated materials not required or suitable for backfill as directed, and shall perform such grading as may be necessary to prevent surface water from flowing into the trenches. The Contractor shall provide adequate equipment for the removal of storm or subsurface waters, which may accumulate in the excavated areas.

B. Trenching:

1. Excavate trenches to lines and grades as indicated on the Drawings and with banks as nearly vertical as practicable.

2. Bottoms of trenches shall be accurately graded to provide uniform bearing on undisturbed soil for the entire length of each section of pipe.

3. The width of the trench at and below the top of the pipe shall be such that the clear space between the barrel of the pipe and the trench wall shall not exceed 8” on either side of the pipe. The width of trench above the top of pipe may be wider if necessary.

4. Over-depth excavations shall be filled with tamped sand to required grades.

5. Excavations of five (5) feet or more in depth shall be shored or supported in conformance with rules, and regulations of State and Federal Governments. Shoring shall be constructed, maintained and removed in a manner to prevent caving of the excavation walls or other load on the pipe.

C. Backfilling:

1. Material for backfilling of pipes shall be approved granular material less than two (2) inches in diameter obtained from the excavation. No material of a perishable, spongy or otherwise unsuitable nature shall be used as backfill.

2. Backfilling of pipe trenches shall commence immediately after installation and testing to preclude damage to the installed pipe. Backfill around pipe shall be carefully placed so as not to displace or damage the pipe, and shall be carried up symmetrically on each side of the pipe to one foot above the top of the pipe. The material shall be carefully compacted or consolidated before additional backfill is placed.

3. Backfill above an elevation of one foot above the top of pipe in conformance with requirements of Section 131101. Material for balance of backfill shall be approved granular material less than six (6) inches in diameter taken from the excavation.

4. Unless otherwise indicated on the Drawings, all pipe shall have a minimum of eighteen (18) inches of cover.

3.5 GENERAL EQUIPMENT REQUIREMENTS

A. Position equipment to result in good appearance and easy access to all components for maintenance and repairs.

B. Install piping, flues, breeching and ducts so that they do not interfere with equipment access.

C. Install level, secure and out of moisture. Provide shims, anchors, support straps, angles, grouted bases, or other items as required to accomplish proper installation.

D. All screws, nuts, bolts and washers shall be galvanized, cadmium plated or stainless steel. After fabrication, hot-dip galvanize unfinished ferrous items for outdoor, below grade or other use subject to moisture.

E. Extend 1/2” Schedule 40 black steel pipe lubrication tubes from all hard to reach locations to front of equipment or to access points. Terminate with proper type of lubrication fitting.

3.6 VALVES AND STRAINERS

A. If no shut-off is indicated, provide ball valves at inlet connections and balance valves at outlet connections to fixtures and equipment. Provide proper valve trim for service intended.

B. Use no solder end valves unless noted otherwise; provide adapters in copper tubing systems.

C. Locate valves with stems above horizontal plane of pipe. In general, locate valves within six (6) feet of floor, out from under equipment, in accessible locations with adequate clearance around hand wheels or levers for easy operation.

D. Provide all valves, cocks and strainers, full pipe size unless indicated otherwise.

E. Provide hand wheel operators on all valves 6” and larger, under 6” lever operators may be used.

F. Provide tool operated valve with stainless steel shaft extension and 'on deck' tool operation for surge chamber butterfly isolation valve.

3.7 IDENTIFICATION OF PIPING

A. Identify each valve by a numbered brass tag with hole and brass chain mounted on valve stem or handle. Tag to be a minimum of 1” in diameter and numbers at least ¼” high stamped into tag. Valves and plumbing lines shall be labeled clearly with the source or destination descriptions.

B. Install an identification chart in a plastic or glass framed enclosure, which schematically illustrates the proper operation of all piping systems and indicates number and location of all valves and control devices within the system.

C. The direction of flow for the recirculation equipment shall be labeled clearly with directional symbols such as arrows on all piping in the equipment area. Where the recirculation equipment for more than one pool is located on site, the equipment shall be marked as to which pool the equipment serves.

3.8 TESTS

A. Perform tests in presence of Owner’s Representative with no pressure loss or noticeable leaks.

B. Do not include valves and equipment in tests. Include connection to previously tested sections if systems are tested in sections.

C. Perform tests as follows:

System	Test Pressure	Test Medium	Duration
Skimmer Lines and Lawson Main Drain sump lines	20 psig	Water*	4 hours
Pool Piping	50 psig	Water*****	4 hours
Pool Main Drains	30 psig	Water*	4 hours
Domestic Water	150 psig	Water*****	4 hours

***Never test PVC pipe or fittings with air or other gases, always use water.**

3.9 PIPE MATERIAL APPLICATION

A. PVC Schedule 40: Below grade swimming pool piping and domestic water piping up to 12” line size; use standard solvent weld fittings.

B. PVC Schedule 80: Above grade swimming pool piping up to 12” line size; use solvent weld Schedule 80 or epoxy coated cast iron fittings.

C. Type L Hard Copper: Above grade domestic water piping.

D. CPVC Schedule 80; Pool Heater Piping.

E. Schedule 40 Steel: Natural gas piping.

3.10 CUTTING AND DRILLING

A. Cutting or drilling necessary for installation of Work of this Section shall be done only with approval of Owner's Representative.

3.11 CLOSING-IN OF UNINSPECTED WORK

A. Do not cover or enclose Work before testing and inspection. Re-open Work prematurely closed and restore all Work damaged.

3.12 QUIETNESS

A. Quietness is a requirement. Eliminate noise, other than that caused by specified equipment operating at optimum conditions, as directed by Owner's Representative.

3.13 FLUSHING OF LINES

A. Flush or blow out pipes free from foreign substances before installing valves, stops or making final connections. Clean piping systems of dirt and dust prior to initial start-up.

B. Just prior to plastering the pool, under the observations of the IOR, the pool mechanical system shall be flushed using the pool circulation pump. Circulate water through the mechanical system until the effluent water from the pool return heads runs clean.

3.14 CLEAN-UP

A. After all Work has been tested and approved, the Swimming Pool Subcontractor shall thoroughly clean all parts of the equipment installations, including all pool pipe and fittings in the pool mechanical room. Exposed parts shall be cleaned of cement, plaster and other materials and all grease and oil spots removed with solvent.

B. The Swimming Pool Subcontractor shall remove debris from the Project site. Cartons, boxes, packing crates and excess materials not used, occasioned by this work shall be disposed of to the satisfaction of the Owner's Representative.

C. If the above requirements of clean up are not performed to the satisfaction of the Owner's Representative, the Owner reserves the right to order the work done, the cost of which shall be borne by the Swimming Pool Subcontractor.

END OF SECTION

SECTION 13 1108
SWIMMING POOL ELECTRICAL

PART 1 - GENERAL

1.1 WORK INCLUDED

A. Provide labor, materials and equipment as required to install the swimming pool electrical system including but not limited to:

1. A complete and operable system of service equipment, switchboards, panelboards, conduits, switches, time clocks and wiring for power and lighting, motor control centers.

2. Junction and/or pull boxes, conduits, disconnects, starters, contactors, wiring and connection of all motors and mechanical equipment, including connection and wiring of line voltage controls associated with the mechanical systems.

3. Swimming pool underwater lighting systems.

4. Swimming pool timing system outlets and scoreboard.

5. Complete grounding system as required and shown on the Drawings.

6. Complete equipotential bonding system as required and shown on the Drawings.

7. Adjusting and preliminary operation of the completed electrical system as described in Article 3.6, A of this Section.

8. Cleaning of all completed Work and installation adjustment of all trim and decorative items.

1.2 QUALITY ASSURANCE

A. Qualifications of Workers:

1. The entity performing the work of this Section shall have been successfully engaged in the respective trade for at least five (5) years immediately prior to commencement of the Work.

2. For actual construction operations, use only trained and experienced workers with a minimum of three (3) years experience with the materials and methods specified.

3. Provide at least one person who shall be present at all times during execution of the work of this Section, with a minimum of five (5) years experience with the type of materials being installed, the referenced standards, and who shall direct all Work performed under this Section.

B. Ordinances and Codes: Materials and construction shall conform with all applicable code requirements, including:

1. National Electrical Code, latest edition; Electrical Safety Orders of the State of California; Department of Industrial Relations; regulations of the State Fire Marshal; rules and regulations of the Board of Underwriters of the Pacific, UL 50, 50E and NEMA 250 rating

2. Chapter 31 of the 2019 California Building Code.

C. Verification of Conditions:

1. The locations shown on the Drawings are diagrammatic only and the exact finish location of equipment and materials cannot be indicated. Therefore, locations of all Work and equipment shall be verified to avoid interferences, preserve head room and keep openings and passageways clear. Changes shall be made in locations of equipment and materials which may be necessary to accomplish these purposes.

D. Preliminary Operations and Testing:

1. Motor driven equipment shall be tested for correct rotation and completion of all connections.

1.3 SUBMITTALS AND SUBSTITUTIONS

A. Provide submittals in conformance with the requirements of Section 01 3300.

B. Required submittals include:

1. Conduit and Fittings as specified in Article 2.2 of this Section.

2. Panelboards as specified in Article 2.6 of this Section.

3. Circuit Breakers as specified in Article 2.7 of this Section.

4. Motor Starters as specified in Article 2.10 and 2.11 of this Section.

5. Fuses as specified in Article 2.13 of this Section.

6. Time Clocks as specified in Article 2.14 of this Section.

7. Ground Fault Circuit Interrupters as specified in Article 2.15 of this Section.

8. NEC required corrosion resistant enclosures, cabinets and boxes as specified in Article 2.8, 2.11, 2.16 & 2.18 of this Section.

C. Submit proof of qualifications as specified in Article 1.2.A of this Section.

1.4 PRODUCT HANDLING

A. Delivery: Deliver all materials to the Project Site in the manufacturer's original unopened containers with all labels intact and legible.

B. Storage: Store all materials under cover in a manner to prevent damage and contamination, and store only the specified materials at the Project site.

C. Protection: Use all means necessary to protect swimming pool electrical materials before, during, and after installation and to protect the installed Work specified in other Sections.

PART 2 - PRODUCTS

2.1 MATERIALS, GENERAL

A. Materials shall be new, in unbroken packages and bear the U.L. label of approval.

B. Equipment of one type shall be by same manufacturer. One type of equipment for classifications such as:

1. Switchboards, panels, buss duct, disconnect switches and allied items.

2. Conduit.

3. Wire.

4. Conduit fittings.

5. Fixtures of the same general type.

6. Wiring devices.

2.2 CONDUIT AND FITTINGS

A. Conduit within or under buildings or where exposed outdoors shall be rigid metal threaded, hot dipped, galvanized, or U.L. approved plastic except where noted otherwise on the Drawings. Metallic conduit shall be of the same metal between outlets or terminals.

B. Use flexible metallic conduit only for short connections of motors and where specifically called for on Drawings. Maximum length shall be 40". Use only liquid tight flexible metal conduit. Install an unbroken #12 AWG insulated copper grounding conductor in each liquid tight flexible conduit with permanent connection at motor junction box and service panel ground.

C. Protect, before installation, metallic conduit runs in all slabs laid on grade or in contact with the earth or exposed in damp locations, with two (2) heavy coats of asphaltum rust-resisting compound.

D. Encase conduits 2-1/2" or larger run underground, outside, or under buildings, in concrete envelopes a minimum of 3" thick, except as indicated otherwise on Drawings or stubouts. Conduits 2 and smaller laid 18" below finish surface in soil.

E. Low voltage runs underground outside buildings, 1-1/4" or smaller, may be G.I. or sherardized steel conduit, with machine applied wrapping equal to double wrap or Scotch-Wrap #50 tape, half lapped and quadrupled at joints in lieu of concrete encasement.

F. Service conduits through foundations or concrete members shall run through metal sleeves with adequate clearances for full movement of the conduit. Do not run conduits through footings.

G. Secure conduits run exposed on surfaces with one-hole heavy-duty straps or fasten with matching fittings to inserts or trapezes, parallel to building walls and ceilings.

H. Cap all conduit or duct stub-outs with standard factory caps; except cap threaded steel conduit with B.I. water pipe caps in outdoor locations.

I. Use conduit fittings as manufactured by Crouse-Hinds Company, Appleton Electric Co., or approved equal.

J. Employ U.L. liquid tight fittings for use with liquid tight flexible metal conduit.

K. Use unions as manufactured by Appleton, O-Z/Gedney, or approved equal. The use of running threads will not be permitted.

L. Exposed conduit and fittings in chemical rooms shall be nonmetallic rigid polyvinyl chloride, corrosion resistant rated suitable for installation in corrosive environments and in accordance with the latest NEC requirements

2.3 EQUIPOTENTIAL BONDING/GROUNDING

A. Bond together and ground to a common ground at a single point all metallic conduit, piping systems, pool reinforcing steel, metal parts of ladders, lifeguard stands, handrails and their supports and the like. The solid copper bonding conductor shall not be smaller than #8 copper.

2.4 WIRING CONNECTIONS

A. Make connections without strain on conductors, allowing the conductors to take a natural position after connections or taps are made. Include all strand of wire in making the connection.

B. Make connections for wiring by one of the following means:

1. Make all taps or connections to conductors with compression type connectors except those smaller than #8 B&S gauge may have soldered connections. Solderless connections for #10 AWG or smaller may be used and shall be "Scotchlok", Buchanan, or approved equal. For #8 AWG or larger, they shall be T&B "LockTite", Burndy "Versitaps", or approved equal.

2. All cable or conductor terminal lugs shall be Burndy "Quicklug", Ilsco, or approved equal. Two-piece stamped lugs and solder lugs will not be approved.

3. Paint taped splices in damp or outdoor locations with two (2) coats of insulating paint.

4. Tag all branch circuit wires with circuit number at the panelboard and at each point of use with linen or plastic tags.

2.5 CONDUCTORS

A. Copper RHW or THW. Do not make splices between boxes.

2.6 COLOR CODING

A. Neutrals (identified conductors shall be white).

B. Phase conductors shall be red for phase B; blue for phase C.

C. Green shall be used for mechanical equipment and receptacle grounds only.

2.7 MOTOR WIRING

A. Make final connections to motors with the required AWG (Minimum #12), Flamenol machine tool wire, 19 strand. Control wiring for equipment shall be Flamenol machine tool wire, 19 strand of required AWG. Provide corrosion resistant junction boxes at each item of equipment to change from standard building wiring to machine tool wire.

B. Phase motors as proper in direction of rotation.

2.8 PANELBOARDS

A. Panelboards shall be flush or surface mounting as indicated with circuit breakers as shown on panel schedule, hinged lockable doors, index card holders and proper bussing.

B. Where indicated on the drawings, panelboards shall be furnished with subfeed breakers and/or lugs, split bussing, contractors, time switches, relays, etc., as required.

C. All panelboards shall be keyed alike.

D. All panelboard enclosures shall be corrosion resistant rated in accordance with the latest NEC requirements.

E. Furnish corrosion resistant panelboard enclosures and terminal cabinets with Yale 46515 flush locks and LL806 keys except where indicated otherwise herein. Fasten the trim to panel boards and terminal cabinet by means of concealed, bolted or screwed fasteners accessible only when the door is open.

F. Panelboards 208/120 volt, three phase, 4 wire, S/N or 120/240 volt, single phase, 3 wire, S/N.

Panelboard types as manufactured by:	
Westinghouse	Type B10B
General Electric	Type NLAB
Square D	Type NQOB

G. Panelboards for 480/277 volt, three panes, 4 wire, S/N.

Panelboard types as manufactured by:	
Westinghouse	Type Pow-R-Line 2
General Electric	Type AE
Square D	Type NEHB
Sylvania	Type NH1B
I.T.E.	Type Approved Equal

H. Panelboard for bussing sizes thru 400 amp shall be 20" wide surface mounted type. Recess mounted type shall have a 20" wide (maximum) recess metal enclosure with trim plate cover extending 1" on all sides of enclosure. Depth shall be 5-3/4" nominal. Height of panel as required for devices.

I. Provide 6" additional gutter space in all panels where double lugs are required, or where cable size exceeds bus size. Minimum bottom gutter space shall be 6" high. 12" additional gutter space may be required for aluminum feeders where used.

J. Panelboards shown on the drawings with relays, time clocks or other control devices shall have a separate metal barriered compartment mounted above panel with separate hinged locking door to match panelboard. Provide mounting sub-base in cabinet for control devices and wiring terminal strips.

K. Panelboard shall have a circuit index card holder removable type, with clear plastic cover. Index card shall have numbers imprinted to match circuit breaker numbers.

2.9 CIRCUIT BREAKERS

A. Breakers shall have a minimum short circuit interrupting rating of 10,000A symmetrical for panelboard voltage thru 240 volt and 14000A for panelboards thru 600 volts or as specified on the drawings. In no case shall the interrupting rating be less than the bus withstand rating unless noted otherwise on the drawings.

B. Circuit breakers as manufactured by the following companies only are acceptable:

1. General Electric Company

2. Square D Company

3. Westinghouse Company

4. I.T.E. Company

C. Circuit breakers shall be arranged in the panels so that the breakers of the proper trip settings and numbers correspond to the numbering in the panel schedules on the drawings. Circuit numbers of breakers shall be black-on-white micarta tabs or other previously approved method. Circuit number tabs which can readily be changed from front of panel will not be accepted. Circuit number tabs shall not be attached to or be a part of the breaker.

D. Where two or three pole breakers occur in the panels, they shall be common trip units. Single pole breakers with tie-bar between handles will not be accepted.

E. All circuit breakers shall be padlockable in the "off" position. Locking facilities shall be riveted or mechanically attached to the circuit breaker (submit sample for approval). Other means of attachment shall not be accepted without prior written approval of Architect.

F. Where branch circuit breakers supply the power to motors and signal systems, the breakers shall be furnished with lockout clips, mounted in the "on" position. The breakers shall be able to trip automatically with lockout clips in place.

G. Panelboard circuit breakers shall be bolt-on type.

2.10 BUSSING

A. Bussing shall be rectangular cross section copper, or full-length silver or tin-plated aluminum.

B. Bussing shall be braces to withstand symmetrical short circuit ratings as follows or as noted on drawings. In no case shall bus short circuit bracing be less than specified circuit breakers.

C. Each panelboard shall be equipped with a ground bus secured to the interior of the enclosure. The bus shall have a separate lug for each ground conductor. No more than one conductor shall be installed per lug.

2.11 POOL MECHANICAL EQUIPMENT ENCLOSURES, TERMINAL CABINETS & MISC CABINETS

A. All pool mechanical equipment enclosures, terminal cabinets and miscellaneous cabinets in the pool mechanical room or chemical storage rooms shall be corrosion resistant rated in accordance with the latest NEC requirements. Enclosures and all cabinets shall be flush mounted (except where noted a surface) of the size indicated on the drawings, and complete with hinged lockable doors and the number of 2-way screw terminals required for termination of all conductors. Terminal cabinet locks to operated form same key used for panelboards. The trim to terminal cabinets shall be fastened by means of concealed bolted or screwed fasteners accessible behind door to terminal cabinets. Terminal cabinets shall have 5/8" plywood backing.

B. Provide engraved nameplate on each enclosure and cabinet indicating its designation and system (i.e., Swimming Pool - Panel 'SP').

2.12 MOTOR CONTROL INDIVIDUAL STARTERS

A. Manual Motor Starters:

1. Provide flush or surface mounting manual motor starters with number of poles and size of thermal overload heaters as required for the motor being controlled (equipped with overload heaters, one for each motor lead). Back boxes shall be supplied with all flush mounting starters whether they are toggle type requiring only a 4" square outlet box or the larger type requiring a special box and cover designed to accept the particular unit. All box types shall be corrosion resistant rated in accordance with the latest NEC requirements.

2. Unless otherwise noted on the drawings, all manual starters for single phase motors, smaller than 1 h.p., shall be the compact toggle type. Manual starters for all single phase motors, 1 to 5 h.p., and all three phase motors up to 5 h.p. shall be the heavy duty type.

3. Where manual motor starter is shown with pilot light, the pilot light shall be installed in a separate outlet box adjacent to the starter outlet, and engraved nameplate in indicate function of pilot light.

4. The following motor starters as manufactured by:

Manufacturer	**Single Phase 1HP and Below**	**Others**
Arrow Hart	Type RL	Type LL
General Electric	CR 101	Class CR 1062
I.T.E.	Class C10, C11 or C12	Class C20
Square D Company	Class 2510, Type A	Class 2510, Type B & C

Westinghouse	Type MS	Type A100
Allen Bradley	Approved Equal	Approved Equal.

B. Individual Magnetic Motor Starters:

1. Magnetic motor starters shall be A.C. line voltage, across-the-line units in a corrosion resistant rated enclosure in accordance with the latest NEC requirements.

2. All starters located outside of a building whether or not indicated shall be W.P. (weatherproof), and all starters noted W.P. shall be furnished in a corrosion resistant rated stainless steel enclosure in accordance with the latest NEC requirements.

3. Starter shall be horsepower rated for the motor controlled, and shall be equipped with properly sized overload elements. Every pole shall be with overload element.

4. Verify the exact motor current and voltage characteristics with the Contractor supplying the motor before installation of a starter.

5. Each starter shall be equipped with "Hand-Off-Auto" switch or stop-start pushbutton as required.

6. Coils shall be designed to operate on voltage indicated on control diagrams and have built-in-under the voltage release for coil circuit to drop motor starter off the line when the line voltage drops below normal operating voltage.

7. The coil control circuit shall be independently fused, sized to protect coil.

8. Starters to be equipped with running pilot light indication with a "Push-to-Test" feature.

9. Magnetic starters shall have a minimum of two auxiliary contacts. Additional auxiliary contacts shall be provided as required to comply with the requirements of the wiring diagrams on the electrical and mechanical drawings and the description of the function in the Mechanical Section of the Specifications.

10. Minimum starter size shall be NEMA size I unless indicated otherwise.

11. The following types of magnetic motor starters as manufactured by:

Manufacturer	**Type**
General Electric	Class CR 106
I.T.E.	Class A20
Square D Company	Class 8536
Westinghouse	Type A200 (Size 4 Max.) or Class II-200 (Sizes 5-8)

2.13 INDIVIDUAL COMBINATION MOTOR STARTERS

A. Combination starter shall incorporate fused disconnect switch and individual magnetic motor starter in a common enclosure. Combination starters shall be mounted in corrosion resistant rated enclosure in accordance with the latest NEC requirements.

B. Starters shall comply with NEMA standards, size and horsepower as indicated on drawings General Electric, Square D, Westinghouse or I.T.E.

C. The disconnect handle used on combination starters shall control the disconnect device with the door opened or closed. The disconnect handle shall be clearly marked as to whether the disconnect device is "ON" or "OFF", and shall include a two-color handle grip, the black side visible in the "OFF" position indicating a safe condition, and the red side visible in the "ON" position indicating an unsafe or danger condition.

D. All starters used in combination starters shall be manufactured in accordance with the latest published NEMA standards, sizes, and horsepower ratings. These starters shall be furnished with three melting alloy type thermal overload relays.

E. Thermal units shall be of one-piece construction and interchangeable. The starter shall be inoperative if a thermal unit is removed.

2.14 MOTOR CONTROL CENTER, INTERLOCKS AND CONTROL DEVICES

A. Refer to mechanical and plumbing drawings and specifications and provide all control devices including timeswitches, relays and interconnection of starters of required.

B. Mount all relays and timeswitches in a separate compartment in motor control center unless otherwise indicated.

C. Whether shown on mechanical and plumbing drawings or control center schedules or not, where motors are controlled by external devices (i.e., thermostats, relays, float or pressure switches, etc.) or interlocked with other motors, each motor starter to be equipped with a "Hand-Off-Auto" selector switch in starter cover. Other starters equipped with a "Start' Stop" pushbutton station in starter cover. The Contractor shall be responsible to submit a complete and detailed set of shop drawings, electrical schematic design along with electrical component cut sheets from the MCC panel or the interlock control device manufacturer. RSD Total Control: Allan Pearson 949-380-7878, South Coast Controls: Anthony Ellis 714-998-5656 or approved equal.

2.15 FUSES

A. Fuses shall be dual element, current limiting type, U.L. Class RK5 unless otherwise indicated on the drawings. Provide one spare set of fuses of each size and type in each motor control center.

2.16 TIME CLOCKS

A. Time clocks shall be provided for all underwater lighting systems and swimming pool circulation pumps not controlled by filter microprocessors.

B. Contacts shall have a minimum rating of 40 amperes at 277V.

C. Timing motor shall be heavy duty synchronous, self starting, high torque type, and shall be rated at 120, 208, 240, 277 volt 60 Hz.

D. Motor shall operate normally at temperature range of -60 degrees Fahrenheit to +120 degrees Fahrenheit.

E. Dial shall be 3" diameter, clearly calibrated with day/night zones and 24 hour rotation, with gear to provide one revolution yearly which automatically varies the on/off settings each day according to seasonal changes. Day and month of the year shall show clearly through calendar window on the dial.

F. Time clocks shall be equipped with 7-spoke omitting wheel marked with days of the week.

G. Time clocks shall be housed in a corrosion resistant rated enclosure in accordance with the latest NEC requirements.

H. Acceptable manufacturers are Tork, Intermatic Paragon, or approved equal.

2.17 GROUND FAULT CIRCUIT INTERRUPTERS

A. Minimum rating shall be 20 amperes, 125V, 5 milliampere trip setting, Class A per UL943.

B. Manufacturer to be Crouse-Hinds, Leviton, or approved equal.

2.18 BOXES

A. Boxes shall be of the size required by ordinances or larger, must be corrosion resistant in accordance with the latest NEC requirements where concealed or exposed on ceilings or walls.

B. Outlets to be surface where wiring is exposed and flush in areas where conduit is concealed.

C. Provide surface outlets with proper corrosion resistant surface covers. Box and cover shall be deep enough to provide at least 1/4" clearance between back of device and back of box. Where box contains more than one device, use a corrosion resistant rated gang box with proper cover in accordance with the latest NEC requirements. Surface outlet boxes shall be of the threaded hub type wherever below 8'0".

D. If necessary for cable installation, additional pull boxes or junction boxes may be installed in accessible locations. Exposed pull boxes and junction boxes shall be corrosion resistant rated in accordance with the latest NEC requirements.

E. Where exposed to weather pull boxes larger than outlet boxes are required, galvanized code gauge sheet steel boxes may be used with covers attached by brass machine screws may be used. Boxes exposed to the weather shall be approved for the purpose, and conduit entrances shall be on the bottom made by means of an interchangeable hub with gasket and adapter nut. Pull boxes not shown on Drawings may be added only after approval of size and location is obtained.

F. For outlets exposed to weather or where noted, cast outlet boxes shall be Crouse-Hinds, Appleton, or approved equal. Boxes shall have proper number and size hubs. Device plates, covers, adapters and boxes shall be as manufactured by Crouse-Hinds, Appleton, or approved equal.

G. Exposed junction boxes, outlet boxes and pull boxes for pool chemical rooms shall be non - metallic suitable for a corrosive environment and in accordance with the latest NEC requirements

2.19 IDENTIFICATION MARKINGS

A. Plainly mark all motor and electrical appliance control equipment indicating the equipment controlled with engraved metal tags.

B. Provide laminated plastic nameplates on panelboards on the outside of the door at the top indicating panel designation and feeder source.

C. Provide laminated plastic nameplates on distribution switchboards and motor control centers at the top center indicating panel designation and feeder source.

D. Identify each distribution switchboard and motor control center circuit breaker with a laminated plastic nameplate indicating its' use.

E. Type panelboard directories on the forms provided with the equipment, indicating the use of each branch circuit breaker.

F. Fasten all laminated plastic nameplates to surfaces with two (2) or more screws.

PART 3 - EXECUTION

3.1 INSPECTION

A. Verify conditions at the Project site before submitting bid. Be responsible for providing all necessary wiring for the new electrical systems. Wherever wiring is being disrupted due to remodeling or changes, reconnect existing and provide new wiring circuits to accomplish a fully operable system at no additional cost to the Owner.

3.2 COORDINATION

A. The Drawings are essentially diagrammatic and indicate the desired location, size, routes, connection points, etc., and are to be followed as closely as possible. Proper judgment must be exercised in executing the Work so as to provide the best possible installation in the available space and to overcome difficulties, limitations or interference wherever encountered. Be responsible for the correct placement of this Work, the proper location and connection in relation to Work of other trades, for determining the exact location of all conduits, outlets and equipment, and for installing the conduits in such a manner as to conform to the structure, avoid obstruction, preserve headroom and keep openings and passageways clear. Particular attention is directed to the close coordination required on exposed Work. Locations shown on Architectural or Mechanical Drawings if different than those shown on Electrical Drawings should be communicated to the Owner’s Representative in writing for clarification.

3.3 INSTALLATION

A. Trenching and Backfill: Conform with requirements of Section 13 1101. Provide minimum cover as required by Code.

B. Conduit Installation:

1. Conduit and metallic raceway systems shall be mechanically and electrically continuous from sources of current to all outlets in a manner to provide a continuous grounding path. Close ends of conduit during construction to prevent entrance of dirt or moisture.

2. Securely fasten conduit to the building construction within three feet of each outlet and within every ten feet thereafter. Secure it to boxes, cabinets, pull boxes, terminals with two locknuts and ends equipped with bushings or a terminal fitting. Cut square with ends carefully reamed.

3. Make bends or elbows so that the conduit will not be injured or flattened.

4. Use insulated metallic bushings in all places where bushings are required.

5. Run exposed conduits level or plumb and parallel to the construction members of the building. No cutting across or diagonal runs will be permitted. Neatly surmount structural obstructions encountered on conduit runs by the use of fittings or pull boxes.

6. Identify feeder conduits by stamped metal tags secured to exposed section of conduit in main or sub-panels.

7. Make up all threaded conduit joints gas and watertight with conductive sealer except conduit above ground in dry indoor locations.

8. Rigidly support all boxes independently of the conduit system.

C. Connections to Equipment:

1. Fully connect, in an approved manner, all electrical outlets, apparatus, motors, equipment, fixtures, wiring devices and appliances whether they are installed under the Electrical Contract or not, which require electrical connections, to the corresponding electrical system outlet.

2. Where the Work of this Section requires connections to be made to equipment that is furnished and set-in-place under other Sections, obtain such roughing-in dimensions from the manufacturer or supplier of each item as required and assume full responsibility for the installation of the connections thereto.

3.4 ADJUSTMENT AND CLEAN-UP

A. Preliminary Operation: Should the Owner's Representative deem it necessary to operate the electrical installation or any part thereof prior to Substantial Completion of the Work, consent to such preliminary operation and supervise conduction of same. Subcontractor shall pay all costs occasioned by such operation. Preliminary operation shall not be construed as an acceptance of any Work installed under this Contract.

B. Clean-up: Upon completion of the Work of this Section, immediately remove all swimming pool electrical materials, debris and rubbish occasioned by this Work to the approval of the Owner's Representative.

END OF SECTION

SECTION 13 1155
SWIMMING POOL PAINTING

PART 1 - GENERAL

1.1 SUMMARY

A. Section Includes:

1. Labor, materials, and equipment required to complete the painting of swimming pool interior as indicated and specified. Work includes the painting of pool shell interior up to the waterline tile and painting floor lane markers and lane targets in a contrasting color as required by the documents.

1.2 SUBMITTALS

A. Samples: Submit paint color sample, paint products and primer product information for approval. Colors of all paint, shall be as directed by the Owner. Painting shall not be started until approvals are received. Approved samples will be retained, on the site, and the finish work shall match the approved samples.

1. Samples of smooth surfaced and non-textured coatings shall be prepared on standard 8-1/2 inch by 11-inch Spray-Out Panels, or as paint samples supplied by the manufacturer.

2. Each sample, on the back side, shall contain the project name, color number, type of material, manufacturer and Subcontractor's name.

B. Certification of Materials: With every delivery of paint materials, the manufacturer shall certify that the materials comply with the requirements of this Section.

1.3 DELIVERY AND STORAGE

A. Store materials and mix only in spaces designated for the purpose by the Owner. Keep all such spaces clean and take necessary precautions to prevent fire. Hang out all oily rags flat and singly in the open air.

1.4 GUARANTEE

A. Materials and workmanship guarantee shall be in accordance with the requirements of the Contract Documents, except the guarantee shall be furnished jointly by the Contractor and the materials manufacturer.

PART 2 - PRODUCTS

2.1 MATERIALS

A. Materials shall be pure, first quality, and shall be delivered to the project site in original unbroken containers bearing the maker's name, brand number, and the batch number. Open and mix ingredients on the premises and remove any rejected materials from the premises.

B. Paints shall be those approved and listed by the Owner. The approved list contains certain paint materials as manufactured by the following:

Hi Bild Epoxy Primer Nelsonite

Poolpoxy Hi-Bild Nelsonite

2.2 GUTTER, PUMP PIT, BACKWASH PIT & SURGE CHAMBER WATERPROOFING

A. Xypex, Miracote Miraflex Membrane C, or approved equal. Mix and apply per manufacturer's recommendations for specific application. Color shall be Gray.

PART 3 - EXECUTION

3.1 INSPECTION OF SURFACES

A. Before Work under this Section is started, the painter with the Contractor and the Owner shall examine all surfaces and related Work to receive painter's finishes. The Contractor shall be informed, in writing, of unacceptable areas. All such areas shall be corrected by the Contractor prior to the start of the Work.

3.2 PROTECTION

A. Contractor shall be responsible for the protection and correction of the Work of all trades from smears, splashes, stains, and damage that occur during the progress of the Work.

1. Exercise care so as not to injure or spatter painting materials on adjacent Work. Any painting materials spattered or where not called for, defaced surface shall be cleaned and the original finish restored.

3.3 PREPARATION OF SURFACES

A. All surfaces shall be in proper condition to receive the finish specified. Prepare surfaces as specified in Section "Preparation for Painting" and as specified herein.

B. Finish surfaces which are not properly prepared and cleaned or which are not in condition to receive the finish specified, shall be corrected before priming is done. All surfaces to receive paint shall be prepared in accordance with the paint manufactures recommended procedure. No priming shall be done until surfaces are approved.

C. Metal surfaces to be painted shall be thoroughly cleaned of all rust, corrosion, oil, and foreign materials, and all blisters and loose paint removed.

3.4 PRIMING

A. Priming: Surfaces specified to receive a painter's finish shall be primed as hereinafter specified. Surfaces of miscellaneous metal and steel not embedded in concrete Priming of surfaces and priming coat shall be as follows:

1. Allow a minimum of 30 days for newly poured concrete to cure. Preferably painting should be done after all construction has been completed.

2. Acid wash concrete floor: use a solution of one part muriatic acid (20 Baume strength) and one part water. Mix this solution in a plastic bucket. Add Nelsonite Prep A (follow label instructions for amount to add). Nelsonite Prep A will help “Kill” the fumes and “body up“ the solution. Apply with a plastic sprinkling container and brush with an acid

etch brush. Fresh acid must touch every inch of the floor and walls. Start at the deep end and work your way to the shallow end. Do the bottom in at least two sections. It is best to agitate the acid solution with the acid etch brush. Allow the acid to stay on the surface for no more than five minutes.

3. Rinse the acid solution with water under pressure. Rinse thoroughly and leave no traces of any water acid solution.

4. Allow the surface to dry. This may take days depending on the temperature and humidity levels while the surface to be painted should not be damp. It cannot be wet.

5. Apply one coat of Nelsonite Hi Bild Primer. Read product profile of the label before using this product. Apply per the manufactures recommended procedure.

6. Allow primer coat to dry for twenty-four hours; however, do not allow primer coat to dry more than seventy two hours before applying topcoat.

7. Apply Nelsonite Poolpoxy Hi Bild in the color specified by owner.

8. Wait minimum of five days before filling Pool with water. Refer to Poolpoxy Hi Bild profiles for individual cure times.

9. Clean and remove any stains or footprint from paint surface prior to filling swimming pool.

3.5 APPLICATION

A. Do not apply painting materials to wet, damp, dusty, dirty, finger marked, rough, unfinished, or defective surfaces. Application of Nelsonite pool coatings shall be in accordance with manufactures directions and product profile.

B. Except as specified, surfaces to be finished shall have the finish applied with good workmanship. All coats shall be applied evenly and with full coverage. Finished surfaces shall be free of sags, runs and other imperfections.

1. Spray painting will be permitted only when approved by the Owner.

2. Where stipple finish is specified, the stipple roller shall be of a texture approved by the Owner.

3. Paint rollers may be used on interior pool wall concrete and masonry surfaces for all coats.

a. Approved Roller Equipment: Rollers may be either lambs wool or synthetic material. Roller nap length shall not exceed 3/4 inch for interior sand finish plaster, masonry and similar surfaces; 3/8 inch for smooth plaster, gypsum drywall, plywood and similar surfaces, and 1-1/4 inch for exterior dash finish plaster, masonry and similar surfaces. Extension roller handles shall not extend 5' -0" for interior Work and 8' -0" for exterior Work.

b. Limitations: Rollers shall not be used on wood surfaces except plywood as above specified.

C. SLIP RESISTANCE

1. Pool Steps can be made slip resistant by using Nelsonite ADD A GRIP or 60 mesh white silica sand. Sprinkle the texturing agent amply on the first coat of Pool Paint while still wet. Sweep off excess or loose texturing agent after first coat is dry and before application of the second coat.

D. RACING LANES AND TARGETS

1. Racing lanes and Targets Must be applied within 24 to 48 hours of application of POOLPOXY HI BILD, or the surface to be painted must be lightly sanded to aid intercoat adhesion.

2. Apply paint to specified surfaces according to the project documents.

3.6 REPAINTING

A. Where paint has been removed down to original surfaces they shall be repainted with three coats; the same as for new Work for the particular surface to be repainted.

B. Where paint has not been removed down to original surfaces, area shall be repainted with two coats as specified for second and third coats. The prime coat may be omitted, except that spot priming will be required where any "bare" areas occur. Repaint surface shall be free of any loose of bubbled paint and loose paint must be removed. All painted surfaces to be repainted shall be sanded prior to repainting.

3.7 INSTALLATION OF GUTTER, PUMP PIT, BACKWASH PIT & SURGE CHAMBER WATERPROOFING

A. Provide two (2) coats of the specified gutter and surge chamber waterproofing prior to plastering the swimming pool. Prepare surfaces to receive waterproofing and cure in conformance with manufacturer's recommendations. Provide steel trowel application method to ensure uniform smooth, dense surface finish.

3.8 CLEANING

A. Remove rubbish, waste, and surplus material and clean all woodwork, hardware, floors and other adjacent Work of any Pool paint spatter.

END OF SECTION 13 1155

DIVISION 21

FIRE SUPRESSION

SECTION 21 13 13

FIRE-SUPPRESSION SPRINKLER SYSTEM

PART 1 - GENERAL

1.01 SUMMARY

A. Section Includes:

1. Fire sprinkler system for protection of buildings.

2. Sstandpipe system.

C. Related Requirements: The requirements of this Section, NFPA 13 and NFPA 14 shall take precedence over requirements found in the following:

1. Division 01 - General Requirements.

2. Section 07 8413: Penetration Fireproofing.

3. Section 09 9000: Paints and Coatings.

4. Section 10 4413: Fire Extinguishers and Cabinets

5. Section 22 0500: Common Work Results for Plumbing.

6. Section 22 0513: Basic Plumbing Materials and Methods.

7. Section 22 0553: Plumbing Identification.

8. Section 22 1000: Plumbing.

9. Section 26 0500: Common Work Results for Electrical.

10. Section 28 3100: Fire Detection and Alarm.

11. Section 31 2323: Excavation and Fill for Utilities.

12. Section 33 1100: Site Water Distribution Utilities.

1.02 SUBMITTALS

A. Manufacturer’s Data:

1. Submit complete and detailed equipment and material list of items to be furnished and installed under this section.

2. Submit manufacturer's specifications and other data required to demonstrate compliance the plans and specified requirements.

B. Drawings:

1. Submit shop drawings of wet pipe fire protection sprinkler system in compliance to NFPA 13, Standard for the Installation of Sprinkler Systems, Sprinkler systems shall comply with the provisions of NFPA 13.

2. Shop drawings shall fully comply with the most stringent provisions of this specification and plans, and with the applicable codes and standards.

3. Shop drawings shall be same size as the Contract Drawings and shall be produced using AutoCAD.

C. Regulatory Requirements:

1. Installation of fire sprinkler system shall not vary from the plans unless alterations have been approved by the State Fire Marshal at DSA.

2. Complete DSA standard testing forms and get sign-off by the Project Inspector.

D. Closeout Submittals: Submit in accordance to Section 01 7700, Contract Closeout, and as specified herein:

1. Record Drawings:

a. Record drawings of installed Work shall be maintained current on the Project site, available for Fire Marshal and the Project Inspector to review.

b. At completion of installation submit Record Drawings signed by installing Contractor in AutoCad format, including:

1). Record Specifications.

2). Record Product Data: Include specific model, type and size for equipment and material installed.

3. Record Test Results.

4. Maintenance Manuals.

1.03 QUALITY ASSURANCE

A. Comply with applicable national or local codes and standards.

B. Except where exceeded by the requirements of these specifications, the following are made part of this section: prints and details, and provisions of the NFPA 13 Standard for Installation of Sprinkler Systems and NFPA 14 Standard for the Installation of Standpipes and Hose Systems.

C. Qualifications of Manufacturer: Products used in work of this section shall be produced by manufacturers regularly engaged in manufacture of similar items and with a 5 year history of successful production that is acceptable to the Architect.

D. Qualifications of Installer: Installer shall have a current C-16 license in the State of California in the installation of fire sprinkler systems.

1.04 FIRE SERVICE WATER CONNECTION

A. The Owner shall pay fees and provide for the fire main POC (point of connection), consisting of the installation of a single detector check valve (if one is required) and meter shut off valve inside a meter vault.

B. Fire Service Mains shall be provided with approved Meter Service Backflow protection. An approved Reduced Pressure Principle Backflow Prevention Assembly (RP) to meet minimum backflow protection requirements for meter service protection (MSP) shall be provided on the fire main, according to the California Plumbing Code (CPC) and according to the current Los Angeles Department of Water and Power WATER SERVICE RULE 16-D where applicable (see section 2.02.D for backflow assemblies). Double Check Assemblies shall only be used with the written approval of the Water Purveyor.

1.05 PRODUCT HANDLING

A. Comply with the provisions specified in Sections 22 0500 and 22 0513.

1.06 COORDINATION

A. Coordinate activities in accordance with provisions of Section 22 0500.

1.07 JOB CONDITIONS

A. Unscheduled utility flow interruptions are not permitted. Schedule service interruptions in advance, with the OAR.

1.08 EXTRA MATERIALS FOR MAINTENANCE

A. Provide spare sprinkler heads in quantity equal to 2 percent of total number of each type of sprinkler head installed. There shall be no less than two heads of each type and temperature rating provided, and in no case less than six spare sprinkler heads per building. There shall be no fewer than 6 spare sprinkler heads for up to 300 sprinkler heads installed; no less than 12 spare sprinkler heads for up to 1,000 sprinkler heads installed; and no less than 24 spare sprinkler heads for the sites with more than 1,000 sprinkler heads installed. Spare sprinkler heads shall be kept inside of spare sprinkler head box(s). A spare sprinkler wrench for each type of sprinkler head shall also be provided inside of each spare sprinkler head box, at each building. Locations of spare sprinkler boxes shall be located at:

1. Fire Sprinkler Riser, when enclosed and secure.

2. Plant Manager’s Office, when Fire Sprinkler Riser is exposed.

PART 2 - PRODUCTS

2.01 FIRE PROTECTION SYSTEM DESCRIPTION

A. General: Provide systems complete including, but not limited to:

1. Provide underground and above ground sprinkler and standpipe piping including trenching and backfilling. Materials and equipment shall be UL/FM listed and approved as required by NFPA for their application. Required signage shall be provided and installed as required by NFPA 13 and NFPA 14.

2. Provide overhead sprinkler system with sprinklers installed as required according to type, location and temperature rating.

B. Sprinkler Heads:

1. Provide chrome pendant spray type sprinkler heads with matching escutcheons in areas with finished ceilings. Exterior escutcheons shall be poly-coated or concealed type to prevent rusting and oxidation.

2. Provide upright sprinklers in areas with exposed piping.

3. Provide poly-coated glass bulb corrosion resistance type sprinklers heads in areas exposed to a corrosive environment such as parking garages and coastal air.

4. Sprinklers shall be glass bulb type, with hex-shaped wrench boss integrally cast into the sprinkler body to reduce the risk of damage during installation,

5. Sprinklers in concealed spaces, exterior locations, and other areas that will experience over 100 degrees F ambient temperature shall be furnished with 200 to 225 degree rated sprinklers. Sprinkler heads in boiler rooms, furnace rooms, or heater rooms shall be furnished with sprinklers rated at 250 to 290 degrees F. If a sprinkler is directly affected by a spotlight, steam, or other heat source, a 350 degree F or higher sprinkler head shall be furnished. Sprinkler heads in other locations, unless otherwise noted, shall be 155 to 165 degrees F rated.

6. Automatic fire sprinkler head type shall be as follows:

   a. In areas with ceiling heights of nine-feet or lower, sprinkler heads installed shall be recessed or fully concealed.

   b. Ceilings eight-feet or lower shall be provided with fully concealed sprinkler heads.

   c. Areas with ceiling height of nine-feet or lower, that are not constantly supervised such as corridors, arcades, students restrooms, and other restrooms shall be provided with fully concealed sprinkler heads.

7. Sprinkler heads in light hazard occupancies are required to be Quick Response sprinklers as required in NFPA 13. Sprinkler heads shall be of the same manufacturer throughout the building/site as indicated. Sprinklers shall typically be ½ inches NPT, standard orifice, minimum 5.6 nominal K factor, UL listed for 175 psi, and listed for light and ordinary hazard occupancies.

8. Other specialized sprinkler heads such as walk-in refrigerator or freezer heads, side wall, ¾ inches sprinklers above 5.6 K factor, and those sprinklers with a K factor below 5.6, shall only be used where required by project condition. Large drop sprinkler heads and extended coverage sprinkler heads shall not be installed.

9. Sprinkler head location shall be designed and installed in an aesthetically pleasing manner and should generally be located in center of 24-inch by 24-inch ceiling tiles and in center of 24-inch by 48-inch ceiling tiles in the 24-inch direction and no closer than 12-inch from the edge in the 48-inch direction.

10. UL/FM listed Sprinkler head guards shall be provided on Sprinkler heads installed at seven feet six inches above floor or lower in exposed locations, or that are deemed subject to damage. Sprinkler head guards shall securely fasten with bolt-on feature to the base of the sprinkler or be a factory installed guard. Guards shall also be provided on upright and sidewall heads where sprinklers are installed at seven feet six-inch heights or lower.

C. Fire Sprinkler and Standpipe Systems:

1. Underground piping: Comply with the requirements of Section 33 1100, Site Water Distribution Utilities.

2. Provide an underground UL/FM listed PVC or Ductile iron supply line connected to detector check meter or water main as indicated. Install site water mains no closer than 10'- 0" parallel to the building foundations. Underground fire water lines shall be installed 36 inches below grade. Tracer wire shall be installed in accordance with Section 33 1100: Site Water Distribution Utilities.

3. Fire Department Connection (FDC) with check valve (wafer type) shall be provided after the backflow preventor, and before the building fire sprinkler riser(s), located where the FDC will be accessible to the fire department from the street or sidewalk without obstructions. No shut off valve shall be allowed on the FDC line as per NFPA 13. FDCs shall have a height between two and four-foot above the ground.

4. PIVs shall be electrically supervised regardless the number of fire sprinkler served (CBC 903.4), and set at a height of three feet to the top and have the handle locked in place with a break-a-way lock.

5. Provide a UL listed, FM approved FDC, approved RP type backflow assembly, check valves, shut-off valves, drain valves, ITV, and flow indicator at the locations required. (Test-and-drain combination valves are prohibited.)

6. Flow indicator shall activate the fire alarm system between 45 and 90 seconds, and activate a local alarm on the outside of the building continuously with water flow. Connection of this switch is a part of the Work of Division 26. Shut-off including valves on the fire main backflow preventor shall be electrically supervised according to CBC 903.4,, NFPA 13 and Section 28 3100 – "Fire Detection and Alarm".

7. Pipe through ceilings at head locations shall be furnished with a two piece, or fully concealed escutcheon. Unless otherwise designated, escutcheons shall be identical and match the other escutcheons of the same type throughout the building or site. Piping through walls and ceilings shall have a split ring chrome escutcheon.

   a. Flexible stainless steel sprinkler head drop system may be used. Flexible drops shall be UL listed, FM approved, and shall be compatible with ceiling systems. Flexible drop length shall be included in the Hydraulic Calculations. The drop system shall include the required support bracing.

8. Furnish and install required signs, spare heads, special wrenches, and spare sprinkler head boxes as required to satisfy NFPA 13, NFPA 14 and this specification.

9. Sprinkler system piping shall be provided with complete drainage as required by NFPA. Test valve discharge shall be piped away from planters to asphalt areas. Furnish protection of piping against accidental or malicious damage.

10. Upon completion of the Work of this section, and before Substantial Completion, subject system, including underground supply connection, to tests required. A minimum hydrostatic test shall be two hundred pounds (200 psi) or fifty pounds (50 psi) in excess of the maximum system working pressure, whichever is greater, for two hours with no leaks or loss of pressure per NFPA 13. The Project Inspector shall be furnished with a NFPA 13 test certification.

11. Local fire sprinkler alarm requirements shall be accomplished with a vane or paddle type water flow detector switch and an electrically powered fire sprinkler horn located on the street side of the building and connected to the fire alarm control panel with secondary power provided from the fire alarm batteries. The drilled out disk shall be attached to the mounting U-bolt. Time delay shall be set at 45 to 60 seconds. Mechanically activated water bells with alarm valve and pressure switch are prohibited.

12. Seismic separation assemblies shall be located between the buildings if space allows accessibility. Otherwise they shall be located inside the building providing the most space. Swing joints may be fabricated on site using flexible groove couplings and six grooved (Victaulic) 90 degree elbows in a teepee formation (see NFPA 13, figure A.9.3.3). Seismic separation assemblies can also be made utilizing a manufactured, UL/FM listed swing joint assembly rated at a minimum 175 psi.

13. Hanging, bracing and support shall utilize only UL/FM listed approved products, and comply with NFPA 13, Chapter 9 requirements for rod and bolt sizes except for the following: 4 and 6 inch pipe shall be supported by a minimum ½ inch hanger rod, 8 inch pipe shall be supported by a minimum 5/8 inch hanger rod, 10 and 12 inch pipe shall be supported by a minimum ¾ inch hanger rod. Hanger rods in exterior locations and in parking structures shall have Electrodeposited Zinc Coating per ASTM B633 to prevent rusting.

14. Building Fire Sprinkler riser assemblies shall be provided as follows. Every building shall be provided with an accessible and electrically supervised riser shut off valve at a height not to exceed five-feet above the floor. Every building riser assembly shall be equipped with a check valve followed by a main drain valve and then the flow indicating switch and pressure gauge immediately after the shut-off valve. In cases where a riser assembly is provided for each floor in the building, a check valve, main drain and flow switch shall be provided for each floor; the main building shut-off shall not be required. An electrically supervised Post Indicator Valve located outside the building may serve as the building riser shut-off valve.

2.02 MATERIALS

A. Access Panel:

FAP-1 Square, steel, prime-coated, with vandal-proof door lock operated by Allen wrench:

Smith	Josam	Elmdor	Or equal
4760		DW – AKL	

B. Globe or Angle Valves: UL/FM listed.

AV-1 Bronze angle valve: 2 inches and smaller, screwed-in bonnet, threaded ends, rising stem:

Nibco	Kennedy	Fairbanks	United	Or equal
T-301	98 SD	0210	126T	

C. Automatic Fire Sprinkler Head, UL/FM listed:

AFSH-1 Brass pendant type for areas with suspended ceilings:

Victaulic	Tyco	Viking	Reliable	Or equal
V27	TY 3231	VK302	F1FR56	

AFSH-2 Brass upright type for areas with no ceilings:

Victaulic	Tyco	Viking	Reliable	Or equal
V27	TY3131	VK300	F1FR300	

AFSH-3 Chrome or poly coated semi recessed type with semi-recessed escutcheon:

Victaulic	Tyco	Viking	Reliable	Or equal
V27	TY3231	VK302	F1FR56	

AFSH-4 Fully concealed type sprinklers; chrome cover:

Victaulic	Tyco	Viking	Reliable	Or equal

V38	TY3531	VK462	F4FR
		VK404	G4A

D. Backflow Prevention Assemblies:

BPV-1 Reduced Pressure Principle Backflow Prevention Assembly (RP) type for meter service protection (MSP) requirements:

Ames	Febco	Watts	Wilkins	Or equal
4000SS	860 OS&Y	909 RP	975 RP	
C400	880 OS&Y	957 RP	375 RP	
M400		994 RP		

BPV-2 Reduced Pressure Principle Detector Assembly (RPDA) for MSP requirements:

Ames	Febco	Watts	Wilkins	Or equal
5000SS	860 DA	909 RPDA	950 DA	
C500	880 DA	957 RPDA	350 DA	
M500		994 RPDA		

E. Gear Operated Butterfly Valves:

GOBFV-1 Grooved end Gear Operated Butterfly Valve, 300 psi, for fire protection sprinkler risers. UL listed, FM approved, with weatherproof gearbox and double pole/double throw monitor switch, double seal design for bubble tight shut off at 175 psi. Corrosion-resistant, fusion-bonded nylon II body coating, easy to read position indicator:

Kennedy	Nibco	Victaulic	Tyco	Or equal
Figure 82M	GD-4765-8N, 300 psi	705W 300 psi	580 300 psi	

GOBFV-2 Wafer Type Gear Operated. Butterfly Valve, same requirements as GOBFV-1:

Kennedy	Nibco	Or Equal
Figure 82W	WD-3510 300 psi	

F. Check Valves:

CV-1 Bronze check valves: 2 inches and smaller, 200 psi WOG, bronze disc, swing type, conforming to MSS-SP-80-97, threaded ends:

Crane	Nibco	Stockham	United	Or Equal
37	T-433-Y	B-319	62T	

CV-2 Iron check valves: 2-1/2 inches and larger, class 175, composition disc, swing type, bolted cap, UL listed, FM approved flanged ends:

Stockham	Kennedy	Tyco	Clow	Or Equal
G-940	126	Model G	F5380	

CV-3 Wafer Type Check Valve:

United Wafer Check #90	Nibco KW-900-W	Mueller A-2102

Or equal.

CV-4 Grooved Check valve 2 ½ inch and larger:

United	Gruvlock	Reliable	Victaulic	Tyco
67	7800	Mode “G”	Series 717	590F

Or equal.

G. Escutcheons

ES-1 Chrome plated, or white poly-coated, 2-piece canopy (escutcheon), 2.25 to 3.5 inches in extended position:

FPPI	Tyco	Reliable	Or equal
01 - 401 Chrome or White	No. 401 Chrome or White	HBC (chrome) HBW (white)	

ES-2 Chrome plated or white poly coated, 2-piece recessed:

FPPI	Tyco	Reliable (semi recessed)	Or equal
01 - 400	410	GF2-C (chrome)	
01 - 402	420	GF2-W (white)	

H. Fire Department Connections:

FDC-1 UL listed, FM approved, type, 4 inch by 2-1/2 inches by 2-1/2 inches bronze body fire department hose connection (FDC):

Crocker	Potter-Roemer	Tyco	Powhaten	Or equal
6405 or 6420	5710 or 5730	86	21-201 or 31-133	

I. Flow Indicators:

FIA-1 Listed by State Fire Marshal, with double pole, double-throw switch, one normally open and one normally closed, UL listed and FM approved:

Potter-Roemer VSRF Series	Notifier WFR Series	Or equal

J. Outside Stem and Yoke Gate Valves:

OS&Y-1 Bronze Gate Valves: 2 inches and smaller, class 175, solid bronze wedge disc, OS&Y, copper silicon alloy stem, UL/FM listed, threaded ends:

Stockham	Crane	Nibco	United	Or equal

B-133	459	T-14	18	

OS&Y-2 Iron gate valves: 2 ½-inch and larger, class 175, IBBM, OS&Y, solid wedge disc, Teflon-impregnated packing, UL/FM listed, flanged ends:

Stockham	Crane	Kennedy	Mueller	Victaulic
G-634	467	68	A-2073	771

Or equal.

OS&Y-3 2 ½-inch and larger, epoxy coated, resilient wedge, 175 pounds gate valve for riser valves, P.I.V., and shut off:

Clow	Nibco	Kennedy	Mueller	Or equal
F-6136	617-0	KV-4068	A-2360	

K. Gate Valves:

GV-1 Bronze gate valves: 2-inch and smaller, class 175, solid bronze wedge disc, rising stem copper silicon alloy stem, UL/FM listed, threaded ends:

Stockham	Crane	Grinnell	United	Or equal
B-133	459 Fig. 66	14		

GV-2 Iron gate valves: 2 ½-inch and larger, class 175, IBBM, solid wedge disc, Teflon impregnated packing, UL/FM listed, flanged ends:

Stockham	Crane	Kennedy	Mueller	Victaulic
G-634	467	68	A-2052	772

Or equal.

L Gear Operated Ball Valves:

GOBV-1 Threaded ball valve for sizes two inches and smaller:

Nibco KT-505W-4 Victaulic 728 Or equal.

M. Seismic Swing Joints:

SJ-1 UL/FM Approved flexible seismic connector with grooved, or threaded ends for seismic separation requirements.

SJ-2 Fabricated swing joints as per NFPA 13 using six groove 90 degree elbows and flexible groove couplers such as Victaulic style 75.

N. Post Indicator Valves:

PIV-1 Vertical Indicator Posts: Furnished for underground valves, post must provide a means of knowing if the valve is open or shut, UL/FM listed. (Where a backflow assembly is provided, the shutoff valves on the backflow preventer satisfy the requirement for a post indicator valve to control the fire main and FD Connection):

Stockham	Kennedy	Grinnell	Or equal
G-951	2945	F-750	
Clow	Mueller	Victaulic	
F-576	2945	774	

PIV-2 Posts Indicator valve: Furnished for underground valves. Ductile iron fusion bonded epoxy coated resilient wedge gate valves: 4 inches and larger, class 175 lb, non-rising stem, mounting plate for indicator post, UL/FM listed, flanged or mechanical ends (in accordance with NSF 61).

Stockham	Kennedy	Clow	Mueller	Victaulic
G-635	71X	F-6100	2360	772
O equal				

O. Sprinkler Guards:

SPG-1 Sprinklers installed at seven feet six inches above floor or lower in exposed locations, or that are deemed subject to damage shall be equipped with a UL/FM listed, head guard. Guards shall be listed, supplied and approved for use with the sprinkler by the sprinkler manufacturer. Sprinkler head guards shall securely fasten with bolt-on feature to the base of the sprinkler or be a factory installed guard. Guards shall also be provided on upright and sidewall heads where sprinklers are installed at seven feet six-inch heights or lower.

Reliable	Viking	Tyco	FPPI	Victaulic
Or equal.				

P. Sprinkler Horn:

SPH-1 UL/FM approved, surface-mounted, weatherproof and red finished:

Horn:	Bell:	Wheelock equal
HRK System Sensor	SSM-24-10 System Sensor	
24 V-DC	24 V-DC	
Weatherproof with	Weatherproof with	
BBS-2 back-box for	WBB box for	
Surface mount	Surface mount installation	
Or equal		

Q. Hangers, Supports, Bracing:

HSB-1 Tolco products or UL listed and FM or equal.

R. Threaded fittings:

TF-1 Ductile iron, 300 psi rated, UL listed, FM or NFPA approved.

TF-2 Cast iron fittings, 175 psi rated, UL listed, FM or NFPA approved:

Anvil Ward Taylor Or equal

TF-3 Malleable Iron, 300 psi rated, UL, Listed, FM or NFPA approved

TF-4 Galvanized, 175 psi rated, UL Listed, FM or NFPA approved

S. Fire Sprinkler Pipes and Standpipes:

FSP-1 Fire sprinkler pipe: 1 inch through 8-inch, Schedule 40, black or galvanized steel meeting ASTM Standards A53, A135, or A795. Pipe Corrosion Resistance Ratio (CRR) shall be 1.00 or greater. Pipe may be threaded or grooved.

a. Piping 2 inches and smaller shall have threaded joints and fittings in concealed, non-accessible locations. Groove coupler connections (Victaulic, Viking VGS, or equal) on pipe sizes 1 inch through 2 inches are acceptable in accessible areas with required seismic bracing provided. Plain end connections such as “Plainlock” and “FIT” are prohibited.

b. For pipe sizes 2 ½-inch and larger, grooved type (Victaulic, Viking VGS, or equal), welded, threaded and flanged connections may be used. Any connection that does not utilize a threaded, welded or grooved connection is prohibited, except for mechanical tee bolt-on branch outlet fittings sizes 2-inch and smaller (Victaulic 920 and the 920N).

c. Submit Verification from manufacturer stating that piping material furnished meets above criteria; (i.e.: threadable pipe has a UL assigned CRR of 1.00 minimum, that it meets ASTM A53, A135 or A795, and it is UL listed, FM or NFPA approved.)

FSP-2 Ductile iron pipe, AWWA C151 (for pipes below grade). Gasketed self retaining joints per ASME/ANSI B16.4.

FSP-3 Plastic, PVC, thick wall (cast iron OD sized), DR 14 (200 PSI). UL listed for fire main service (underground). Gasketed self retaining joints - Johns Manville Blue Brute AWWA C900, JM Eagle C900 water pipe or equal.

FSP-4 Fire Sprinkler Pipe: 1 inch through 3-inch, Copper meeting NFPA 13 Standards. Pipe may be grooved.

FSP-5 Flexible Fire Sprinkler Head Connectors: 1 inch pipe size flexible stainless steel fire sprinkler head connectors “Flex Head Industries” Models 2024, 2036, 2048, 2060 and 2072, or equal..

2.03 ACCESSORIES AND APPURTENANCES

A. Escutcheons: Polished chrome plated split-ring type for exposed piping at every penetration inside finished rooms.

B. Guards: Provide sprinklers with guards at ceiling at or under seven feet six-inch high and where subject to damage or vandalism.

C. Miscellaneous: Provide accessories and appurtenances for a complete system.

2.04 FIRE HOSE VALVES

A. Schedule Numbers:

SPV-1 Valve, Fire Hose, cast brass angle valve, UL listed and Factory Mutual approved; 1 ½-inch at 175 psi, female NPT outlet with 1 ½-inch male NPT by 1 ½-inch male NST adapter nipple.

POTTER-ROEMER	POWHATAN	UNITED
4070	500	88
Or equal		

SPV-2 Valve, Standpipe for 2 ½-inch for 150 or higher psig working pressure, male NST outlet for fire department hose connection. Cast brass, replaceable composition disc, and rough chromium-plated body (unless provided inside UL listed valve cabinet) with hand wheel.

POWHATAN	UNITED	POTTER-ROEMER
DXWDGV-250F DXAV5-250F	88H	4065
Or equal		

2.05 STANDPIPE VALVE CABINETS

A. Schedule Numbers:

SPVC-1 Cabinet semi-recessed type center break door with lock.

POTTER-ROEMER #1810 Series, DVL or E	GUARDIAN
National Fire Equipment Ltd. Model C-975 with glass door or Model CVB-200 solid door	Or Equal

SPVC-2 Surface mounted cabinet for masonry walls, same as SPVC-1.

PART 3 - EXECUTION

3.01 EXAMINATION

A. Examine areas and conditions under which Work of this section shall be performed. Correct conditions detrimental to proper and timely completion of Work. Do not proceed until unsatisfactory conditions have been corrected.

3.02 PREPARATION

A. Ream pipe and tube ends. Remove burrs. Bevel or groove plain end ferrous pipe ends.

B. Remove scale and foreign matter, from inside and outside of pipes, before assembly.

C. Provide piping connections to equipment with flanged or grooved connections.

3.03 INSTALLATION

A. Install underground supply line connected to detector check or water main indicated. Braced or clamped bends shall be in accordance with requirements of NFPA 24. Provide vertical clamp rods at flange and spigot piece of risers, long enough to pass through riser's base flange where required. Furnish concrete thrust blocks where required. Tracer wire shall be installed as per Section 22 0553: Plumbing Identification on PVC underground piping.

B. Install FDCs, check valves, shut-off valves, gauges, Inspector’s test and drain assemblies and flow indicator. FDC must be installed so that it is unobstructed and accessible for the Fire Department’s first response unit.

C. Pipe through floors, wall, and ceilings, at head locations, shall be furnished with required sleeves, and escutcheons and fire caulking where indicated and/or required by code. Escutcheons shall be polished chrome plated unless other finish is selected by the Architect.

D. Sprinkler system shall be provided with complete drainage facilities in accordance with CBC standards. Drain discharge may discharge into a sewer, storm drain, sump pit or street gutter. Fire sprinkler drains shall not discharge onto a playground or across a sidewalk. Discharge to plumbing fixtures is prohibited due to the inability of a plumbing fixture to receive a full flow of water from a fire sprinkler drain valve under working pressure.

E. Upon completion of the Work of this section, and before Substantial Completion, subject the entire system, including underground supply connections, to tests as required by NFPA 13, and CBC standards and furnish the Owner with a certificate of compliance as required.

F. Close nipples are prohibited. Threaded unions are prohibited. Where a threaded union or coupling is needed, a groove type fitting (Victaulic or equal) shall be used instead. If a groove style coupling is used in a concealed area, an access panel allowing full access to that connection shall be provided.

G. Fire sprinkler systems piping hangers, seismic bracing, anchors and supports shall conform to NFPA 13, CBC and other applicable codes and the requirements of this specification.

H. Grooved joints shall be installed in accordance with the manufacturer's latest published installation instructions. Grooved ends shall be clean and free from indentations, projections, and roll marks in the area from pipe end to groove. Gaskets shall be of an elastomer grade suitable for the intended service, and shall be molded and produced by the coupling manufacturer.

I. Tee branch outlets on fire sprinkler mains shall be by the use of a threaded ductile iron tee fitting, a groove type tee fitting, (Victaulic or equal), or by the use of a thread-a-let welded on by a certified welder as required by NFPA. Mechanical tee bolted branch outlet fittings are prohibited except for branch outlet sizes 2-inch and smaller.

J. Sprinkler lines within the building shall be concealed within the structure. Risers shall be installed in utility, supply rooms or similar service areas whenever possible, and shall not obstruct access, or maintenance of other equipment within the space. Mains and risers shall be located within the area protected by the sprinkler system unless otherwise approved by fire authorities having jurisdiction.

K. Sprinklers that have been dropped, damaged, have cracked bulbs, or show a visible loss of fluid shall not be installed.

L. Sprinkler bulb protectors shall be removed by hand after sprinkler installation. Tools or other devices to remove the protector that could damage the bulb in any way shall not be used.

M. Routing of piping in non-concealed exposed areas shall be subject to the Architect's review in the final shop drawings.

N. Underground piping shall have a minimum of 36 inches of cover to grade. Underground pipe shall be installed on a flat not less than 6-inch thick undisturbed sand bed. After required pressure-leak test, pipe shall be covered with sand not less than 6 inches thick, before backfilling. Comply with NFPA Standards. Piping is not allowed to be underground below the building floor slab.

O. Provide approved backflow prevention assemblies. Installations of backflow prevention assemblies shall be tested and certified by a certified Los Angeles County backflow prevention device tester prior to Substantial Completion. Tests shall be performed in the presence of the Project Inspector. Test reports shall be turned over to the Project Inspector for mailing to proper agency.

P. Provide shunt trip when sprinklers are installed in the elevator machine rooms and elevator hoist way unless the sprinklers are located 2 feet or less from the hoist way pit floor.

Q. Test valve (ITV) shall be located at the opposite end of the sprinkler system from the supply. Test-and-drain type combination valves are prohibited. ITV discharge and main drain lines shall be piped to a sump pit or to the outside of the building to within a foot from the ground where it will drain away from the building to an exterior storm drain.

R. Each building with a sprinkler riser shall be furnished with an accessible shut off riser valve installed no higher than five feet from the finish floor. Each floor shall have a

separate shut off valve with flow switch, and shall be securely enclosed or secured with a chain and break-a-way lock. Also see section 2.01- C-12 of this specification.

3.04 PROTECTION

A. Protect the Work of this section until Substantial Completion.

3.05 CLEANUP

A. Remove rubbish, debris, and waste materials and legally dispose at off-project site.

END OF SECTION

DIVISION 22

PLUMBING

SECTION 22 05 00 –

COMMON WORK RESULTS FOR PLUMBING

PART 1 – GENERAL

1.01 SUMMARY

A. Section Includes:

1. This Section provides the basic plumbing requirements that apply to the Work of Division 22.

B. Related Requirements:

1. Division 01: General Requirements.

2. Division 22: Plumbing

3. Division 23: HVAC

4. Division 26: Electrical.

1.02 REGULATORY REQUIREMENTS

A. Current federal Safe Drinking Water Act (SDWA) regulations require the furnishing of lead-free pipe, solder, and flux in the installation or repair of plumbing in non-residential facilities connected to public drinking water systems. Under this regulation, solders and flux are considered lead-free when they contain 0.2 percent lead or less. Under California regulations pipes and pipe fittings are considered lead-free when they contain 0.25 percent lead or less as defined in California Assembly Bill 1953 (AB 1953). No pipe, pipe fittings, or any other fitting or fixture intended to convey or dispense water for human consumption by drinking or cooking is allowed in the domestic plumbing system, if they do not meet the low lead definition of AB 1953. Weighted average lead content of the wetted surface area of pipes, fittings and fixtures may not exceed 0.25 percent.

1. Provide lead-free water pipe, solder, and flux materials that meet the standards as outlined by the federal SDWA regulations and California AB 1953 if installed in drinking water system.

2. Collect pipe, solder, and flux material samples as required by the Project Inspector. Test samples shall be delivered to an Owner designated testing laboratory for testing of lead content.

a. Test samples for lead content by the atomic absorption spectrophotometry method.

3. Materials found not conforming to SDWA and California AB 1953 regulations shall be deemed defective Work and shall be replaced with lead-free materials.

4. Comprehensive testing of the remaining materials for their lead content shall be performed as required by the Project INSPECTOR.

A. Materials, fabrication, equipment, and installation shall comply with industry standards and code requirements. Where manufacturer's recommendations exceed industry standards, the manufacturer's recommendation shall establish the minimum standard. As a minimum, standards from the following organizations shall apply:

1. ANSI - American National Standards Institute.
2. ASME - American Society of Mechanical Engineers.
    a. ASME Boiler and Pressure Vessel Code.
    b. ASME B31 - Standards for Pressure Piping.
3. ASHRAE - American Society of Heating, Refrigerating and Air-Conditioning Engineers.
4. ASTM - American Society for Testing and Materials.
    a. ASTM A53 Specification for Welded and Seamless Pipe.
5. AWWA - American Water Works Association.
6. CSA - Canadian Standards Association.
7. FM Global - Factory Mutual Global
8. IAPMO - International Association of Plumbing and Mechanical Officials.
9. NFPA - National Fire Protection Association.
10. OSHA - Occupational Safety and Health Administration.
11. SMACNA - Sheet Metal and Air Conditioning Contractors' National Association.
12. UL - Underwriters Laboratories Inc.
13. Intertek (ETL Certification).

B. Materials, fabrication, equipment, and installation shall comply with federal, state, and local codes including, but not limited to, the following:

1. CBC, California Building Code, and CMC, California Plumbing Code.
    a. Latest edition as adopted by the City of Los Angeles, the County of Los Angeles, and the State of California including amendments effective on the Effective Date of the Contract.
2. California Code of Regulations, Title 8, Industrial Relations, Division 1, Chapter 4, Division of Industrial Safety.

3OSHA - Occupational Safety and Health Administration.

4. CDPH - California Department of Public Health.
5. SCAQMD - South Coast Air Quality Management District.

C. Specifications or Drawings shall not be construed to permit deviation from the requirements of governing codes unless approval has been obtained from legally constituted authorities having jurisdiction, and the Architect. The Contract Documents may contain more stringent requirements than those legally required.

D. Permits and Fees: Refer to the General and Supplementary Conditions.

1.03 SUBMITTALS

A. Provide submittals in accordance with Section 01 3300: Submittal Procedures and with specific requirements of Division 22 sections, as applicable.

B. The above information shall become the basis for inspecting and testing materials and actual installation procedures performed in the Work.

C. Shop Drawings: Submit one additional copy when control diagrams having line voltage connections are indicated. Shop Drawings shall be specifically prepared for the Work of this Project. Drawings prepared in accordance with requirements of Section 01 3113: Project Coordination and Section 01 3300 may be provided by the Architect to serve as a background for the Shop Drawings. Shop Drawings shall comply with the requirements of Section 01 3113 and Section 01 3300 and shall indicate at a minimum:

1. Complete system layout of equipment, components, plumbing fixtures, piping, indicating service clearances, and pipe sizes, fitting types and sizes and pipe elevations, distances of pipes and equipment from building reference points and hanger support locations. The above items shall be coordinated on the shop drawings according to the requirements of Section 01 3113.

2. Schedule and description of equipment, piping and fittings.

1.04 PROJECT RECORD DOCUMENTS

A. Comply with provisions of Section 01 7700: Contract Closeout.

B. Project Record Drawings:

1. Provide a complete set of plumbing and fire protection drawings in AutoCAD and, if available, BIM, complete with external reference drawings, fonts, blocks and plotter pen color/line thickness settings on CD-ROM. Also submit one set of full size reproducible plots on vellum and 3 sets of prints.

2. Before Contract Completion, deliver corrected and completed prints to the OAR. Delivery of project record documents to the OAR does not relinquish responsibility of furnishing required information omitted from project record documents.

C. Operation and Maintenance Manuals:

1. Submit two copies of operation and maintenance manuals in required form and content. If no revisions are required, furnish one additional copy. If revisions are required, one copy shall be returned with instructions for changes; perform such changes and return three copies of manuals. Manuals shall be bound in accordance to Section 01 7700. Deliver manuals to the OAR. Submit an electronic copy of the entire manual in PDF file format.

2. Contents of Manual:

a. Title sheet with Project name, including names, addresses and telephone number of Contractor, installer, and related equipment suppliers.

b. Manufacturer's operating instructions including, but not limited to, the following:

1) Identification of components and controls.

2) Trouble shooting checklist and guidelines.

3) Recommendations for optimum performance.

4) Warnings and safety precautions on improper or hazardous operational procedures or conditions

c. Manufacturer's product data and parts and maintenance booklet for each item of equipment furnished under Division 22 that includes the following as a minimum:

1) Manufacturer’s model, identification and serial numbers.

2) Exploded view of assembly drawings identifying each component or part with the relevant part number.

3) Directory of manufacturer's representatives, service contractors and part distributors.

4) Maintenance and trouble-shooting instructions, including schedule for preventive maintenance, periodic inspection and cleaning criteria.

d. Project Record Drawings: Complete set of plumbing, fire protection and control system drawings in 50 percent reduced print format shall be furnished with the manual. Submit the above record drawings on CD-ROM in AutoCAD and, if available, BIM, complete with external reference drawings, fonts, blocks, and plotter pen color/line thickness settings.

e. Testing, Adjusting, and Balancing reports: Submit as specified in Section 23 0593.

f. South Coast Air Quality Management District (SCAQMD) permits to install and operate boilers, water heaters and other fuel burning equipment and third-party source test reports as required by SCAQMD to allow start-up and operation of equipment.

g. Los Angeles County industrial waste permits.

h. Valve directory complete with location, function, size, and model of each valve with reference to the project record drawings.

i. Equipment and component identification chart complete with location, function, size, and model of each equipment or component with reference to the project record drawings.

1.05 COORDINATION

A. Contract Documents indicate extent and general arrangement of Work under Division 22. Contractor shall coordinate work in accordance with Section 01 3113 requirements and make adjustments as required to provide maximum headroom, a neat arrangement to keep passageways and openings clear to provide accessibility and provisions for maintenance, and to meet code requirements.

1.06 DELIVERY, STORAGE, AND HANDLING

A. Delivery and Storage: Deliver materials to Project site in their original unopened containers with labels intact and legible at time of delivery. Store in strict accordance with manufacturer's recommendations.

B. Do not store plastic pipe or materials in direct sunlight.

1.07 PRELIMINARY OPERATION

A. OAR may require any portion of plumbing Work to be operated before Substantial Completion. Such operation shall be in addition to regular tests, demonstrations and instructions required under the Contract Documents, and shall be performed as required.

B. Notify the INSPECTOR at least 24 hours in advance of lighting or re-lighting pilots.

1.08 TRAINING OF OWNER PERSONNEL

A. Training of Owner's personnel shall include:

1. A minimum of 4 hours of on-site overview of the overall Plumbing System.

2. Refer to Division 22 sections for specific training on each of the components of the Plumbing System.

B. Contract shall include the cost of training Owner operation and maintenance personnel in operating, adjusting, maintenance, trouble-shooting, and Project site repair of each component, equipment, or system provided under this Contract.

C. Operational and maintenance training shall be conducted on the Project site, unless indicated otherwise.

D. Upon completion of Owner training, a completion certificate indicating the nature of the training and a description of the systems, complete with equipment and component lists shall be issued to each trainee. The certificate should be issued in duplicate with one copy retained by OAR.

E. An attendance sheet with the names and signatures of all participants attending the training shall be submitted to the OAR and kept as part of the project documents.

1.09 GUARANTEES AND DAMAGE RESPONSIBILITY

A. Sound of water flowing in piping shall not be transmitted to building structure. Operation of mechanical system shall not produce operational sounds that can be heard outside of rooms enclosing apparatus or equipment.

PART 2 – PRODUCTS

2.01 MATERIALS AND EQUIPMENT

A. Unless otherwise specified, materials and equipment shall be new, in good and clean condition. Equipment, materials, and components shall be of the make; type and model number noted on Drawings or specified. Pieces of equipment of the same type shall be by the same manufacturer.

B. Whenever an item is listed by a single proprietary name, with or without model number and type, it shall be for purpose of design only, to indicate characteristics and quality desired. Proprietary designation listed on Drawings, or listed first in Specifications, is used as a basis for design to establish a standard for quality and performance and space requirements.

C. Equipment and materials indicated or required to be installed outdoors shall be of the type that is designed, manufactured, listed or approved by authorities having jurisdiction for outdoor installation by being resistant to the adverse effects of weather. The additional protective measures against outdoor weather required by the manufacturers' installation instructions and prevalent practice shall be provided.

D. For substitution of materials or products, refer to the General Conditions.

PART 3 – EXECUTION

3.01 SERVICE INTERRUPTIONS, OFF-SITE, GAS AND WATER

A. Schedule Work so there shall be no service interruptions of existing systems or systems during normal hours of operation of affected systems and facilities.

B. When service interruptions are mandatory, arrange in advance with the OAR as to time and date of such interruptions.

C. Systems, which are interrupted, shall be returned back into operation in such manner that they will function as originally intended.

3.02 CUTTING, NOTCHING, AND BACKING

A. Conform to California Building Code, Title 24, Part 2, for notches and bored holes in wood and for pipes and sleeves embedded in concrete and for cuts in steel, as detailed on structural Drawings.

B. Where pipes pass through, or are located within one inch of any construction element, install a resilient pad, ½ inch thick minimum, to prevent contact.

C. Furnish provisions for recesses, chases, and accesses and provide blocking and backing for proper reception and installation of plumbing Work.

3.03 LOCATION OF PIPING AND EQUIPMENT

A. Location of piping, apparatus and equipment indicated on the Drawings is approximate and shall be altered to avoid obstructions, preserve headroom, and provide free and clear openings and passageways.

B. Trenches parallel to footings shall not be closer than 18 inches to the face of footings and shall not be below a plane having a downward slope of 2 horizontal to one vertical, from a line 9 inches above bottom of footing.

C. Pipe in tunnels shall be installed close to one side of tunnel to provide maximum space for passage. Pipe shall not be installed through crawl hole unless otherwise specified or detailed on Drawings.

D. Place equipment in locations and spaces indicated, disassemble and/or reassemble equipment as required by Project conditions.

3.04 TESTS AND TESTING

A. Tests shall be as required under the applicable sections of Division 22, including this Section.

B. Additional tests may be required in the case of products, materials, and equipment if:

1. Submitted items are altered, changed, or cannot be determined as exactly conforming to the Contract Documents.

2. Performance testing and results may also be required on certain items which are as specified, including fan, and pump performance.

C. Piping Tests:

1. Perform tests required to demonstrate that operation of plumbing systems and their parts are in accordance with Specifications covering each item or system, and furnish materials, instruments and equipment necessary to conduct such tests. Tests shall be performed in presence of the Inspector, and representatives of any governmental agency having jurisdiction. Work shall not be concealed or covered until required results are provided.

2. If required tests are not performed, Owner may provide in accordance with the Contract Documents.

3. Pressure gauges furnished in testing shall comply with CPC. Air shall be bled from lines requiring hydrostatic or water tests.

4. Systems shall be pressure-tested in accordance with pipe testing schedule below. Pipe test shall indicate no loss in pressure after a minimum duration of 4 hours at test pressures indicated. Where local codes require higher test pressures than specified herein for fire sprinkler systems, local codes shall govern.

5. Fuel gas lines shall be first tested with piping exposed, before backfilling trenches or lathing; second with piping in finished arrangement, backfilled and paved where required, and walls finished.

6. Piping systems may be tested as a unit or in sections, but entire system shall successfully meet requirements specified herein, before final testing by the Inspector.

7. Repair of damage to pipes and their appurtenances or to any other structures resulting from or caused by these tests, shall be provided.

D. Pipe Testing Schedule:

System Tested	**Test Pressure (psig)**	**Test With:**
Durham system, glass or plastic acid waste, vent and roof drain (except pipes running under a slab or underground)	Fill with water to top of highest vent; allow to stand two hours, or longer, as required by Inspector. Minimum head required for any joint shall be 10 feet in building.	Water
Cast-iron soil, waste and interior downspout, condensate drain from air conditioning equipment	10 feet of water, vertically	
Storm water disposal lines	Running water test	Water
Vacuum pump or condensate pump discharge and condensate return piping	150	Water
Domestic water piping	200	Water
Standpipes, wet or dry	300	Water
Fire sprinkler piping	200	Water
Gas piping(steel threaded or plastic)	60 (both tests)	Air
Gas piping (steel welded)	100 (both tests)	Air
Gas welding station	1-1/2 Working pressure 100 min.	Dry nitrogen
Compressed air piping	175	Air

E. Equipment Performance Assurance Tests:

1. Before operating any equipment or systems, a thorough check shall be performed to determine that systems have been flushed and cleaned as required and that equipment has been properly installed, aligned, lubricated, and serviced. Factory instructions shall be checked to verify installations have been completed and recommended lubricants have been installed in bearings, gearboxes, crankcases, and similar equipment. Particular care shall be furnished in lubricating bearings to avoid damage by over-lubrication and blowing out seals. Equipment shall also be checked for damage that may have occurred during shipment, after delivery, or during installation. Damaged equipment, products, and materials shall be replaced or repaired as required.

2. Upon completion of the above, adjust the system settings to within normal operating conditions to prevent the system from being damaged upon start-up.

3. Run-test the equipment after start-up for five consecutive days. Tests shall include operation of all equipment and systems for a period of not less than two 8 hour periods at 90 percent of the full specified capacities.

4. Equipment Start-up Reports: For each equipment or system on which start-up is performed, submit 8 copies of start-up report for review by the Architect.

   a. The start-up report shall include the manufacturer's standard start-up form completed and signed by the start-up technician.

5. Provide, maintain, and pay costs for equipment, instruments, and operating personnel as required for specified tests.

6. Provide electric energy and fuel required for tests.

7. Final adjustment to equipment or systems shall meet specified performance requirements.

8. Equipment, systems, or Work deemed defective during testing shall be replaced or corrected as required. Test until satisfactory results are provided.

F. Specific Coordinated Plan for Test and Balance:

1. Provide a narrative of the operational intent that clearly describes the function and sequence of operation of each component, equipment, or system installed. Instruct designated Owner personnel in the operation of the installed systems.

2. Prior to final test and balance, plumbing equipment and systems shall be operated and tested as indicated in Article 3.04.F above to demonstrate satisfactory overall operation of the installed systems.

3. Welding performed as part of this Division may be subject to radiographic inspections at random in accordance with requirements specified in Section 22 0513: Basic Plumbing Materials and Methods.

3.05 NOISE AND VIBRATION REDUCTION

A. Correct noise or vibration caused by plumbing systems. Provide all necessary adjustments to specified and installed equipment and accessories to reduce noise to the lowest possible level

B. Correct noise or vibration problems caused by failure to install work in accordance with Contract Documents. Include all labor and materials required as a result of such failure. Pay for re-testing of corrected noise or vibration problems by the project acoustical consultant including travel, lodging, test equipment expenses, etc.

3.06 PROTECTION, CARE AND CLEANING

A. In addition to storage criteria of the General Conditions, and provisions under Section 01 5000: Construction Facilities and Temporary Controls, the following shall be provided:

1. Provide for the safety and good condition of materials and equipment until Substantial Completion. Protect materials and equipment from damage.

2. Protect installed Work.

3. Replacements: In case of damage, immediately provide repairs and/or replacements as required.

4. Protect covering for bearings, open connections to tanks, pumps, compressors and similar equipment.

5. Interior of piping shall be maintained free of dirt, grit, dust, and other foreign materials.

6. Fixtures, piping, finished brass or bronze, and equipment shall have grease, adhesive, labels, and foreign materials removed. Chromium, nickel plate, polished bronze or brass Work shall be polished. Glass shall be cleaned inside and out.

7. Before initial start-up and again before Substantial Completion, piping shall be drained and flushed to completely remove grease and foreign matter. Pressure regulating assemblies, traps, strainers, boilers, flush valves, and similar items shall be thoroughly cleaned. Tag system with an information tag listing responsible party and date of element, before initial start-up and again before Substantial Completion. Compressed air, oil, and gas piping shall be blown out with oil-free compressed air or inert gas.

END OF SECTION

SECTION 22 05 13

BASIC PLUMBING MATERIALS AND METHODS

PART 1 – GENERAL

1.01 SUMMARY

A. Section Includes:

1. This Section prescribes basic materials and methods generally common to the Work of Division 22.

B. Related Requirements:

1. Division 01: General Requirements.

2. Division 22: Plumbing.

3. Division 26: Electrical.

4. Section 33 1100: Site Water Distribution Utilities.

1.02 SUBMITTALS

A. Provide in accordance with Division 01, Section 22 0500 and specific requirements of each section of Division 22.

B. Types of welding rods to be used.

1.03 QUALITY ASSURANCE

A. Standards: Comply with applicable national, state, and local codes and standards: ASTM, ASME, and ANSI. Federal Specifications, AWWA, SISPI, NFPA, FM, UL, CPC (California Plumbing Code), CMC (California Plumbing Code), CSA.

B. Qualifications of Manufacturer: Products used in the Work of this Section shall be produced by manufacturers regularly engaged in manufacture of similar items and with a history of successful production as reviewed by the Architect.

1.04 COORDINATION

A. Coordinate related Work in accordance with provisions of Section 01 3113: Project Coordination.

PART 2 – PRODUCTS

2.01 GENERAL

A. Provide the following products if they are indicated in the Contract Documents or if they are required for the proper installation, function or operation of equipment, systems or components indicated in the Contract Document.

B. Provide the following products as a complete assembly with required accessories for a complete and functioning entity in compliance with governing codes and applicable standards as specified in Section 22 0500, manufacturer's instructions or as required.

1. Omission of minor details in the Contract Documents does not waive and/or otherwise relinquish compliance with the above requirements.

2.02 MANUFACTURERS AND MATERIALS

A. Ball Valves: Bronze, 2-inch and smaller:

BV-1: Class 150, 600 psi, CWP, 2 piece construction reinforced Teflon seats, full port, adjustable packing gland, stainless ball and stem, threaded ends.

Hammond UP-8303A/UP-8305/UP-8513, NIBCO T-685-80-LF/TS-685-66-LF, Milwaukee UPBA400S/450S, or equal.

Provide valve Handle shall be stainless steel when valve is installed below grade or in the ground valve box.

BV-2: Class 150, 600 psi, CWP two piece construction with reinforced TFE seats, full port, adjustable packing gland, (no threaded stem designs allowed), threaded ends.

NIBCO T-685-80-LF, Hammond UP-8303A, Milwaukee UPBA-400 or equal.

NIBCO T585 S6R66 (Stainless Steel), Milwaukee BA-260 (Stainless Steel).

Provide BV-1A shall be used on hot domestic and cold water systems.

BV-3 Class 150, 600 psi CWP, 2-piece construction, bronze body, reinforced Teflon seats, adjustable packing gland, (no threaded stem designs allowed), threaded ends.

Hammond UP8301A, NIBCO T-585-70, Milwaukee BA-400, or equal.

Provide BV-2 to be used only where water is NOT used for water consumption.

Ball Valves in Insulated Piping: Use extended operating handle of non-thermal conducive material, and protective sleeve that allows operation of valve without breaking the vapor seal or disturbing insulation and memory stops that are fully adjustable after insulation is applied. NIBCO Nib-Seal Handle.

B. Butterfly Valves:

Provide Butterfly Valves in a domestic plumbing system intended to convey water for human consumption shall comply with Quality Assurance, article 1.03 of this Section.

BFV-1 Centerline Series A, 200 psi CWP tight shut-off.

1. Body: Lug type ductile iron. Suitable for bi-directional dead-end service at rated pressure without use of downstream flange.

2. Disc: Bronze, or aluminum bronze.

3. Stem: One or two-piece, 400 series stainless steel.

4. Seat and O-Rings: EPDM.

5. Upper and Lower Stem Bearings: Copper alloy or non-metallic material.

6. Operators: Valves 6 inches and smaller, with lever handle. Valves 8 inches and larger, with manual gear operator and disc position indicator.

7. Manufacturers:

a) Valves 2.5 to 6-inch: NIBCO, Milwaukee ML-233E, Hammond 6411-03, or equal.

b) Valves 8-inch and larger: Milwaukee ML 333E, Hammond 6411-03, NIBCO LD 2000, or equal.

C. Check Valves:

Provide check valves in a domestic plumbing system intended to convey water for human consumption shall comply with Quality Assurance, article 1.03 of this Section.

1. Bronze, 2-inch and smaller:

CHV-1: 200 psi, CWP horizontal swing, Y pattern, renewable seat and disc, threaded ends.

NIBCO T-413-Y-LF, Milwaukee UP-509, Hammond UP-904 or equal.

Provide on domestic hot and cold water systems.

CHV-2: Class 125 200 psi, swing check, bronze body, Teflon disc, soldered ends.

Stockham B-310TY, Crane 1340, NIBCO S-413-Y, Milwaukee 1509-T, Hammond IB-912 or equal.

Provide on junior fire sprinkler systems less than 3 fire sprinkler heads.

CHV-3: 200 psi, CWP, bronze body, horizontal swing, Y pattern, renewable seat and disc, solder ends.

Nibco S-413-Y-LF, Milwaukee UP 1509-T, Hammond Up-946 or equal.

Provide on domestic hot and cold water systems.

2. Cast Iron 2 1/2-inch and larger:

CHV-4: Class 125, 200 psi, CWP, IBBM, renewable seat and disc, bolted cap, threaded ends:

Crane 372, Stockham G-927, NIBCO T-918-B, or equal.

Provide on multiple domestic hot and chilled water pump systems, multiple steam boiler return lines from steam trap.

CHV-5: Special low-pressure check valve for installation in gas lines.

Circle Seal Products Co.
119B-PP-0-15 psi; #1:1/8 inch IPS; #2:1/4 inch IPS #3:3/8 inch IPS.

Provide on low pressure gas in chemistry laboratory systems.

D. Earthquake Valve:

EQV-1 Mechanically triggered by seismic movement, complying with state of California seismic response specifications, UL listed and certified by D.S.A. Size and pressure as required or indicated on Drawings. (Minimum 1/4 psi, maximum 10 psi. Earthquake valve shall shut off gas automatically during an earthquake to prevent an explosion or fire. Valve shall be Koso California seismic valve, or equal.

1. Not sensitive to vibrations caused by passing trucks or accidental bumping.

2. Sensitive to wide amplitude G's only. Preset at factory for the correct G-rating.

3. Positive sealing from minus 10 degrees F. to 150 degrees F.

4. Visual open-close indicator.

5. Manual reset.

6. Plumb line for mounting.

7. Tripping mechanism has non-creeping rolling latch.

8. Install valve per manufacturer’s recommendations only.

Provide automatic shut-off for gas systems during earthquake at gas.

D. Expansion Tank:

ET-1 Pressurized, vertical, steel expansion tank for potable water systems with FDA approved, replaceable, heavy duty, butyl rubber blend diaphragm, polypropylene lined dome, 1/2 inch, 3/4 inch, 1 inch or 1 ½-inch NPT system connection, 1/2 inch or 3/4 inch drain, 0.302 inch-32 standard automobile tire valve type charging connection, lifting rings and a floor mounting skirt for vertical installation. The tank must be constructed in accordance with Section VII of the ASME Boiler and Pressure Vessel Code and stamped for 125 psi working pressure. The tank must be also rated for a continuous working temperature of 240 degrees F. Provide weather and rust resistant coating.

Bell and Gossett, Wheatley, Taco, Amtrol or equal.

ET-2 except for potable water system such as domestic hot water system. Provide at each domestic hot water heater or system.

E. Flow Control Valve – Manual:

FC-1 Flow control valves: Bell and Gossett Series CB circuit setter balancing valve, line size, with integral pointer (to register degree of valve opening), differential pressure meter connections with built-in check valves and lockable memory stops. Armstrong Series CBV circuit-balancing valves, Victaulic/TA Hydronics, or equal.

Provide balancing and controlling of domestic hot water system flow for different branch circuits.

F. Gate Valves:

Provide gate valves in a domestic plumbing system intended to convey water for human consumption shall comply with Quality Assurance, article 1.03.

1. Bronze, 2-inch and smaller:

GV-1 Class 125, 200 psi CWP, bronze body and bonnet non-rising stem, inside screw, screw-in bonnet, solid disc, threaded ends:

Hammond IB645, Crane 1701, Milwaukee 105, American 3F, NIBCO T-113, or equal.

Provide shut-off and isolation of equipment and device for gas system.

GV-2 Class 125, 200 psi, CWP, bronze body and bonnet, non-rising stem, inside screw, screw-in bonnet, solid disc, threaded ends:

NIBCO T-113-LF, Milwaukee UP 105, Hammond UP 645 or equal.

Provide on domestic hot and cold water systems.

GV-3 Same as GV-1, except solder ends:

NIBCO S 113, Milwaukee 115, Hammond IB 647, or equal.

Provide in yard box, to each group of fixtures behind access panels, where valves are located near ceiling and beams.

GV-4 Class 125, 200 psi, CWP, bronze body and bonnet, non-rising stem, inside screw, screw-in bonnet, solid disc, threaded ends:

NIBCO T-113-LF, Milwaukee UP 105, Hammond UP 645 or equal.

Provide on domestic hot and cold water systems.

GV-5 Class 125, 200 psi WOG, rising stem, inside screw, screw-in bonnet, solid disc, threaded ends:

Stockham B-100, Crane 428, NIBCO T-111, Milwaukee 148, Hammond IB-640, or equal.

Same as GV-3 except where clearance is not an issue. Adequate clearance for operation must be provided because hand wheel and stem rise. Provide inlet and outlet connections to water heaters and pumps, make up water lines to HVAC equipment and expansion tanks.

GV-8A Class 250, 250 psi, CWP, O S and Y, IBBM, resilient seat gate valve, flanged ends.

Watts 408-OSY-RW, Kennedy 7168 or equal.

The epoxy coated valves are recommended in the domestic cold water system where corrosives in the water line might cause damage to the inside of valve and where pressure rating in excess of 200 psi is required.

GV-9 Class 125 250 psi CWP iron body, flanged ends, bolted bonnet with wheel handle, resilient wedge, non-rising stem.

Provide in walls for cold water system pipe sizes 2 ½-inch and larger.

NIBCO F-619-RW or equal.

GV-10 Class 125, 250 psi CWP iron body, flanged ends, bolted bonnet with 2-inch operating nut, resilient wedge, non-rising stem, fusion bonded epoxy coated.

Provide for using below grade for cold water system pipe sizes 2 ½-inch and larger.

NIBCO F-619-RW-SON or equal.

G. Globe Valves:

1. Bronze, 2-inch and smaller:

Provide in a domestic plumbing system intended to convey water for human consumption shall comply with Quality Assurance of Article 1.03.

GLV-1A Class 125, 200 psi, CWP, screw-in bonnet, Teflon disc, threaded ends:

Milwaukee UP 502, Hammond UP 440 or equal.

GGLV-2 Class 125, 200 psi, CWP, screw in bonnet, Teflon disc, solder ends.

Hammond IB-418, Milwaukee 1502, NIBCO S-211-Y, or equal.

GLV-2A: Class 125, 200 psi, CWP, screw in bonnet, Teflon disc, soldered ends.

Milwaukee UP 1502, Hammond UP 418 or equal.

Provide on domestic hot and cold water systems.

H. Heater Vent Pipe:

1.Schedule Number:

HVP-1 Shall be UL approved for service specified. Concealed heater vent pipe, including pipe in or through attic spaces, shall be Los Angeles City approved double wall metal vent pipe. For recessed wall heaters, furnish B.W. type. All others may be Type B, or B.W. Clearances must comply with Los Angeles City code and conditions of UL listing.

American Metal Products Co., Inc., Simpson Dura-Vent, AmeriVent, Hart & Cooley Mfg. Co., Metalbestos, or equal.

Provide component parts of a vent assembly, including vent cap, shall be companion items of same manufacturer. Each item shall be UL-approved and listed.

I. Liquid Level Gage:

LLG-1 Refrigerant type, carbon steel with stainless steel trim or all forged steel construction, back-seating standard design. Upper and lower valve furnished with ball check valves; 1/2 inch diameter glass on center. Four 3/16 inch diameter gage glass guard rods or slotted steel guard.

Peneberthy, Henry, Conbraco, or equal.

Magnetic Lever Valves:

MLV-1 Bronze, stainless steel and bronze trim, 2-way, packless normally closed, metal seat.

General Controls, K-10AA2030 or equal.

Provide for Can washing system. Provide for can washing installation.

K. Piping:

PROVIDE FOR PIPES IN A DOMESTIC PLUMBING SYSTEM INTENDED TO CONVEY WATER FOR HUMAN CONSUMPTION SHALL COMPY WITH QUALITY ASSURANCE ARTICLE 1.03.

1. Piping shall be continuously and permanently marked with manufacturer's name, type of material, size, pressure rating, and the applicable ASTM, ANSI, UL, or NSF listing. On plastic pipe, date of extrusion must also be marked.

2. Underground non-ferrous pressure pipes shall be installed with proper color tracer wires. Refer to color code provisions in Section 22 0553: Plumbing Identification.

P-1 Cast iron: Hubless, service weight, ASTM A888, CISPI 301, conforming to CISPI 310 and installed in accordance to IAPMO 1S 06. American Foundry, Tyler, or AB & I or equal.

P-2 Galvanized steel, Schedule 40, ASTM A53., US Steel or equal.

P-3 Copper drainage tube, underground, type L hard, ASTM B 88, Mueller, Cerro Brass or equal.

P-4 Copper drainage tube, inside structure and above grade. Type DWV hard temper, ASTM B 306, Mueller, Anaconda, Cerro Brass, Cambridge-Lee, Halstead or equal.

P-5 Purple pipe, PVC, schedule 40 for reclaimed or recycled water (below ground only for non-potable irrigation systems), type 1, grade 1, PVC-1120, Cell Class 12454 B.

P-6 Copper water tube, Type L hard, ASTM B88. Mueller, Cambridge-Lee, Halstead or equal. (when used above ground only)

P-7 Copper water tube, Type K hard, ASTM B88, by Mueller, Cerro Brass, Cambridge-Lee, Halstead or equal.

P-8 Polyethylene plastic pipe, ASTM D 2513, standard dimension ratio. 11, rated at 80 psi working pressure at 73 degrees Fahrenheit (F). for 3-inch and smaller, SDR 11.5 rated at 76 psi at 73 degrees F. for 4-inch and above, butt or socket type fittings, joined by heat fusion, orange or yellow color.

CPCHEM (Chevron Phillips Chemical Company LP) PE 2406, or equal.

Provide for natural gas below grade only. Transition to anodeless steel riser at meter, regulator, or building wall.

P-9 Red seamless brass 85-5-5-5, iron pipe size (IPS), threaded pipe, ASTM B43. Mueller, Cerro Brass, Cambridge-Lee, Halstead or equal.

P-10 Black steel pipe, Schedule 40, ASTM A53, Type E, ERW by US Steel, or equal.

P-11 Seamless copper tubing, tempered drawn, Type M, ASTM B88 by Mueller, Cerro Brass or equal.

P-12 High Silicon Iron Casting, 1 ½-inch and 2-inch, threaded for science room vents when ferrous waste piping is provided, ANSI-A21.10, WWP-356-36, ASTM D1784-699, by Duriron or equal.

P-13 PVDF (Polyvinylidene Fluoride) schedule 40 pipes, conforming to ASTM F1673, ASTM D3222 and complying with UL723 (ASTM E84). The joints may be no-hub or electro-fusion type. Installer shall be certified by manufacturer for joint installation. Orion, Fuseal or equal.

Provide for installations where the corrosive waste piping passes through air plenums as defined by California Mechanical Code (CMC) and underground.

P-14 Polypropylene chemical waste, flame retardant pipe, conforming to ASTM F1412 and ASTM D4101. The joints may be no-hub or electro-fusion type. Installer shall be certified by the manufacturer for joint installation. Orion, Fuseal or equal.

Provide fireproof wrapping where the corrosive waste piping passes through air plenums as defined by CMC. This type may be used for underground.

P-15 PVC, thick wall, cast-iron OD sized, UL listed, AWWA listed, NSF listed, Class 200 with tracer wire, Blue Brute, or equal.

Provide Domestic water, irrigation and main fire line below ground only (4-inch and over).

P-16 Type 316L Stainless steel chemical waste pipe, marked with manufacturer's identification and fittings. Mechanical press fit joints with EPDM seals Manufacturer's representative shall instruct installers and certify them for joint installation. Piping system shall be provided with a five-year manufacturer’s material warranty.

Blucher-Josam or equal.

THIS TYPE SHALL NOT BE USED FOR UNDERGROUND INSTALLATIONS. ONLY WHERE THE CORROSIVE WASTE PIPING PASSES THROUGH AIR

PLENUMS AS DEFINED BY CMC.

P-17 304 / 304L Stainless Steel, .049 wall, ASTM A312. Pipe must be certified for use with the Vic-Press 304TM piping system, by Trent Tube, Victaulic or equal.

THIS TYPE SHALL NOT BE USED FOR UNDERGROUND INSTALLATIONS. ONLY WHERE THE CORROSIVE WASTE PIPING PASSES THROUGH AIR PLENUMS AS DEFINED BY CMC.

P-18 CPVC (Chlorinated polyvinyl Chloride) schedule 40 pipe, conforming to ASTM D1784 and complying with UL723 (ASTM E84). The joints shall be of solvent cement type conforming to ASTM F493. Installer shall be certified by the manufacturer for this type of joint installation. Spears, Corzan, Charlotte or equal.

P-19 PVC, schedule 40, extruded from 100 percent virgin Polyvinyl Chloride (PVC) compound, meeting requirements of class 1254-13 of ASTM D1784.

L. Pipe Fittings:

Pipe fittings in a domestic plumbing system intended to convey water for human consumption shall comply with Quality Assurance, article 1.03.C.

PF-1 Cast iron, soil or waste no-hub coupling with neoprene gaskets, stainless steel corrugated shields and stainless steel clamps. 2 bands for size 1 ½-inch thru 4-inch, IAPMO, ASTM C 564 and CISPI 310.

American Foundry, Mission, Tyler, or equal.

PF-2 Cast iron, soil or waste, Heavy-duty no-hub coupling with neoprene gaskets, stainless steel corrugated shields and stainless steel clamps. 4 bands for size 5-inch thru 10-inch. IAPMO, ASTM C564 and CISPI 310.

American Foundry, Mission, Tyler, or equal.

PROVIDE WITH P-1 AS REQUIRED BY THE ENGINEER DUE TO SITE SPECIFIC CONDITIONS.

PF-3 Malleable iron, Class 150, threaded, galvanized, beaded, ANSI B 16.3. P-2

Stockham, Stanley Flagg, Grinnell Oreual.

PROVIDE WITH P-2.

PF-4 Cast brass drainage fittings ASA B 16.23, ASTM B 42. Provide with copper drainage tube.

Mueller Brass, Nibco, Stanley Flagg, Lee Brass Or equal.

PROVIDE WITH P-3 AND P-4.

PF-5 Wrought copper - solder type ANSI B 16.22

Mueller Brass, Nibco, Lee Brass or equal.

PROVIDE WITH P-6 PIPE, SOLDER, AND FLUX SHALL BE LEAD-FREE FOR DRINKING WATER. FLUX SHALL BE AN APPROVED WATER-SOLUBLE MATERIAL.

PF-6 Polyethylene plastic fittings, ASTM D 3261 and D 2683, standard dimension ratio 11, rated at 80 psi working pressure at 73 degrees F. for 3 inches and smaller, SDR 11.5 rated at 76 psi at 73 degrees F. for 4 inches and above, butt or socket type fittings, joined by heat fusion, color orange or yellow.

CPCHEM, (Chevron Phillips Chemical Company LP) or equal.

Provide with P-8.

PF-7 Polyethylene transition risers, for Pff-6 above, Transition fitting must have a minimum vertical height of 36 inches from the horizontal connection which will allow for a 6-inch steel riser above ground. Polyethylene transition risers shall be anodeless.

Central Plastics Company or equal.

Installed in a gas piping system for the purpose of providing a transition from horizontal below ground (polyethylene) to a vertical above ground (steel). Transition must be made on the horizontal side of the gas piping system and meet ASTM standards for Polyethylene plastic pipe and fittings.

PF-8 Bronze and brass, 250 psi, threaded, ASA B16.17 and F S WW-P-460.

PROVIDE WITH P-9.

Mueller Brass, Lee Brass Or equal.

PF-9 Malleable iron, Class 125, ANSI B 16.3, threaded or welded Schedule 40 black steel for 2-inches and below and welded for 2 ½-inch and above, by Stockham or equal.

PROVIDE WITH P-10.

PF-10 Cast iron, threaded, Class 125, ANSI B 16.1.

PROVIDE WITH P-12.

Stockham or equal.

PF-11 Cast-iron OD sized,, bell and spigot gasket joints.

PF-12 Steel butt weld type, ASTM A 234WPB.

PROVIDE WITH P-12.

PF-13a No-hub couplings for factory grooved PVDF or polypropylene, schedule 40 piping. The coupling shall be of the same material and gauge as the pipe. Each coupling shall have 300 series stainless steel outer band and 5/16 inch bolts, nuts and washers plated to meet a 100-hour salt spray test per ASTM B117. Installer shall be certified by the manufacturer for this type of joint installation. Orion, Fuseal or equal.

PROVIDE WITH P-13.

PF-13b The pipe and fitting shall be joined using the socket fusion system conforming to ASTM 2657. Installer shall be certified by the manufacturer for this kind of joint installation. Orion, Fuseal or equal.

PROVIDE WITH P-14.

PF-13c CPVC (Chlorinated Polyvinyl Chloride) schedule 40 pipe and fittings, conforming to ASTM D1784 and complying with UL723 (ASTM E84), shall be joined using solvent cement conforming to ASTM F493. Installer shall be certified by the manufacturer for this kind of joint installation. Spears, Corzan or equal.

PROVIDE WITH P-18.

PF-14a Drains, bottle traps and similar devices for CPVC, PVDF or polypropylene, schedule 40 piping, shall be of same material and gauge as the pipe with mechanical joints. Installer shall be certified by the manufacturer for this kind of joint installation. Orion, Fuseal or equal.

FURNISH WITH MATCHING PIPE ONLY. PROVIDE FIREPROOF WRAPPING WHERE THE POLYPROPYLENE PIPING PASSES THROUGH AIR PLENUMS AS DEFINED BY CMC.

PF-14b Type 316L Stainless steel joint for chemical waste piping systems including drain or bottle traps. Blucher-Josam or equal.

FURNISH WHEN USED WITH MATCHING PIPE ONLY. THIS TYPE SHALL NOT BE USED FOR UNDERGROUND INSTALLATIONS AND ONLY WHERE THE CORROSIVE WASTE PIPING PASSES THROUGH AIR PLENUMS AND THE AVAILABLE SPACE IS NOT SUFFICIENT FOR FIRE PROOF WRAPPING OF POLYETHYLENE PIPING. GRADE TO SUIT INTENDED SERVICE. PROVIDE WITH PIPING SCHEDULE P-16.

Victaulic Vic Press 304TM or equal.

PF-15 Precision cold drawn austenitic 304/304L stainless steel, with elastomer O-rings

PF-16 Grooved end type– ASTM A395 and A536 ductile iron; ASTM A234 WPB forged steel; fabricated from ASTM A53 carbon steel. Couplings shall be supplied with angle-pattern bolt pads for rigidity, except in locations where flexibility is desired. Gaskets shall be pre- lubricated. Galvanized or painted, by Victaulic or equal.

GRADE TO SUIT THE INTENDED SERVICE. PROVIDE WITH PIPING SCHEDULE NUMBER P-2 OR P-10.

PF-17 Grooved end type– ASTM B75 or B152 and ANSI B16.22 wrought copper, bronze sand casting per ASTM B584-87 copper alloy CDA 836 per ANSIbB16.18. Couplings shall be CTS style 606 supplied with angle pattern bolt pads for rigidity, coated with copper coated alkyd enamel. Gaskets shall be pre-lubricated Flush seal type by Victaulic or equal.

FOR DOMESTIC HOT AND COLD WATER 2 ½-INCH AND LARGER COPPER APPLICATIONS. PROVIDE WITH PIPING SCHEDULE NUMBER P-6.

PF-18 CPVC fittings must conform to ASTM D2846 specification for chlorinated polyvinylchloride (CPVC) plastic for hot and cold water distribution system.

PF-19 Plastic fittings, schedule 40 molded from PVC type I compound, conforming to the requirements of specification ASTM D2466.

M. Pipe Isolators:

PLA-1 Absorption pad shall be not less than ½ inch thick, unloaded. Pad shall completely encompass pipe.

Provide for copper piping.

Holdrite, LSP, Stoneman, Potter-Roemer, Trisolator, PR-Isolator, or equal.

PLA-2 PLASTIC CUSHION TO FORM AN INSULATING LINER AND ELIMINATE METAL TO METAL CONTACT WHEN SECURING COPPER TUBES AND PIPES IN AIR CONDITIONING AND REFRIGERATION INSULATION PREVENTING GALVANIC EROSION. (ACOUSTICAL TYPE FOR SOUND ABSORPTION).

Hydra-Zorb Cushion Clamps, Acousto-Clamp, or equal.

N. Pressure Gage: Aluminum or steel case, minimum 4 ¼-inch dial; pressure type or combination vacuum-pressure type, with provisions for field calibration. Dial indicator to indicate pressure in psi with accuracy to within plus or minus 0.5 percent of maximum dial reading. Furnish gages with restriction screw, size 60, to eliminate vibration impulses. Black case and ring, bourdon tube of seamless copper alloy with brass tip and socket. Three way gage cock, constructed of brass with stuffing box, 1/2 inch couplings, with fixed or movable cap nut to shut off pressure gage.

PG-1 Pressure type, black drawn steel case, 4-1/2-inch glass dial, range approximately twice line pressure.

Marsh Keckley, Trerice, Weksler, Weiss, or equal.

O. Plug Valves:

PV-1 2 inches and smaller: Rockwell No.114, lubricated plug type, 200-pound., water operating gauge pressure iron body and plug, regular pattern, threaded, with indicating arc; by Walworth, Homestead, WKM, or equal.

Provide Isolation and on-off application for gas system.

PV-2. 2 ½-inch and larger: Rockwell No.115 and No.165 lubricated plug type, 200 pound water operating gauge. Iron body and plug, regular pattern, flanged, with indicating arc. Walworth, Homestead, WKM, or equal.

P. Safety Relief Valves:

SRV-1 Combination temperature and pressure relief type. CSA approved. Set to open at 125 psi pressure.

Watts 40L Cash-Acme NCLX-1

Provide for Steam system, hot water system.

SRV-2 Same as SRV-1, except provide on storage type water heater with anode in dip tube.

Watts 10 x L, Cash-Acme NCLX-1

SRV-3 Spring type, ASME and NB stamped and certified with manual lifting device for air or gas.

Bailey, Cash-Acme, Watts, Keckley or equal.

Provide for Gas system and compressed air system.

Q. Strainers:

STR-1 Description: Wye type with monel or stainless steel strainer cylinder (manufacturer's standard mesh), and gasketed machine strainer cap. Where indicated on Drawings, provide with valved (globe valve) blowout piping, same size as blowout plug.

1. 2-inch and smaller:
   C.M. Bailey No.100-A, 250 lb., cast iron body, threaded, Keckley 'B', Spirax Sarco Y-type, or equal.

2. 2 ½-inch and larger:
   C.M. Bailey No.100-A, 125 lb., cast iron body, flanged, or Victaulic style 732, 300 psi, ductile iron body, grooved, fusion bonded epoxy coated.

   C.M.Bailey, Armstrong, Muessco, Keckley 'A', or equal.

   Provide for Oil and gas systems.

STR-2 Y pattern cast iron bodies, 125 psi, monel screen. Open area at least twice the cross-sectional area of IPS pipe in which strainer is installed and may be woven wire or perforated type. Screwed ends for sizes up to 2 inches, flanged ends fusion bonded epoxy coated for 2 ½-inch and larger perforations, in accordance with the following:

1. Steam service - 40 square mesh.

2. Other services - 16 square mesh.

Bailey No.100, Armstrong, RP&C, Keckley or equal.

Provide as same as STR-1.

STR-3 Flanged, bucket type, semi-steel body, 125 psi, stainless steel screen with 1/8 inch diameter perforations, all sizes.

Bailey No.1, Zurn 150 Series, RP&C, Keckley GFV or equal.

Provide for Domestic cold and hot water system. Mount above grade for water service.

STR-4 Grooved, T-pattern, ductile iron body, 300 psi, stainless steel frame and mesh basket, grooved ends.

Provide for Domestic hot and cold water system except for high pressure system.

R. Vent Caps:

VC-1 Vandal-proof hood type, for plumbing vent lines.

Stoneman Engineering and Mfg., Semco 1550

Provide for Sanitary drainage system.

S. Vacuum Valves:

VV-1 Vacuum valves; for vacuum serve, 125 psig working pressure, cast iron body, spring loaded lubricated plug type.

General Controls, Honeywell, Valmatic, or equal.

Provide for Domestic hot and cold water system.

T. Protective Coating for Underground Steel Piping Applied to Underground Automotive:

VV-1 Vacuum valves; for vacuum service, 125 psig

Provide for WORKING HOIST PIPING ONLY.

1. Black steel or galvanized steel piping indicated for below grade installation, shall be protected as specified prior to delivery to the Project site:

    a. Sandblast black steel pipe to a gray finish. Sandblast galvanized steel pipe lightly only.

    b. Install one coat of cut back asphalt to galvanized pipe immediately after sandblasting. Pre-heat black pipe to 180 degrees F. immediately before coating.

    c. Install one coat of high-temperature (melting point of 240 degrees F. minimum) Grade B asphalt enamel.

    d. Install one wrapping of 20 mils thick glass, fiber mat, Owens-Corning Coromat or L.O.F. Blueflag with 1/4 inch overwrap. Glass fiber shall be dry at time of installation.

    e. Install a second coat of asphalt enamel as specified above. Glass fiber mat shall be centered in the asphalt enamel.

    f. Install an overwrap of Kraft ripple paper.

2. Total thickness of pipe wrapping shall be not less than 1/8 inch. Entire coating operation shall be accomplished by mechanical means in a continuous operation. Hand installation of protective coating is not permitted.

3. Each piece of wrapped pipe shall be legibly identified at no greater than 5 feet intervals by fabrication company. Each material submittal shall include the name of the fabrication company. Maintain one reviewed Sample on the Project Site.

4. Acceptable manufacturers of wrapping are: Hunt, Mobile, Conway or equal.

5. Fittings (including couplings), unprotected pipe adjacent to fittings, and damaged pipe protection shall be wrapped at Project site as follows:

    a. Fittings and pipe to be wrapped shall be thoroughly cleaned of material foreign to pipe manufacturer.

    b. Install one coat of Plicoflex No. 105 or Protecto Wrap No. 1170 adhesive primer to metal.

c. Wrap pipe and fittings with a minimum thickness of 3/32 inch of Plicoflex No. 310 pipe line butyl molding tape, or Protecto Wrap No. 200 molding tape. Install 3 layers, each layer overlapping next approximately 2/3 width of tape, without stretching. Tape and primer shall be of the same manufacturer.

d. Wrap vinyl tape, 10 mil thickness, over molding tape with 1 inch minimum overlap.

J.M. Trantex, 3M Scotchwrap or equal.

5. Pipe and fittings specified to be wrapped shall be tested with a holiday detector, after pipe has been installed in trench and before backfilling, in presence of the Project Inspector. Furnish a Tinkler and Raser model E-P holiday detector, or similar equipment for this test. Work, which is deemed defective, shall be repaired or replaced. The Project Inspector may test for damaged pipe wrapping after backfilling.

6. Instead of wrapping underground steel pipe as specified above, pipe may be machine-wrapped before delivery to the Project site as follows:

a. Pipe shall be cleaned of moisture, oil, grease, scale, and other foreign material by cleaning with non-oily solvent and wire brushing. Remove metal burrs and projections.

b. Install one coat of Plicoflex No.105 adhesive primer to cleaned pipe. If thinning is required, furnish only non-oily thinners as recommended by tape manufacturer.

c. Wrap coated pipe with Plicoflex No.340-25 tape (15 mil butyl and 10 mil vinyl laminate) Tape shall be installed by machine wrapping at approved plant only. Maintain tension (minimum of 5 pounds per inch of width) on tape over entire diameter of pipe. Tape shall be permanently identified and visible on vinyl side.

d. Fittings, unprotected pipe, and damaged pipe protection shall be wrapped as indicated above.

U. Pipe and Fitting Requirements Schedule: Unless otherwise specified or indicated on Drawings, pipe and fittings shall be installed in accordance with the following table:

TABLE I
PIPE AND FITTING SCHEDULE

Use	Limits	Pipe	Fittings
Domestic hot and Cold water, underground	Up To88 inches	P-6	PF-5
Copper, underground only		P-7	PF-5
Cold water, underground (Site piping)	4-inch and over	P-144	PF-11
Domestic hot and cold water, in building and above ground	All	P-6	PF-5
In building above ground	2 to 8-inch	P-6	PF-5
Compressed air	Underground or in concrete	P-9	PF-8

	Above ground	P-10	PF-3
Condensate drains and drains From HVAC Equip.		P-6	PF-5
Downspouts, interior above and below grade, up to 5 feet from building.		P-1	PF-1 Or PF-2
Acid Vent	All	P-12	PF-10
Fire Mains (Fire Hydrant)	Underground	P-15	PF-11
Gas Natural	Underground	P-8	PF-6
Gas Natural	Above ground	P-10	PF-9
Copper Drainage Tube (Underground)	Waste and Vent	P-3	PF-4
Copper Drainage Tube (Above Ground)	Waste and Vent	P-4	PF-4
Vents	New Building	P-1	PF-1 or PF-2 (IRE) if required by engineer
Vents	Existing Buildings and Exposed Downspouts	P-2	PF-3
Vents	For acid waste lines underground	P-13, 14, 16, 17, 18	PF- 13a, 13b, 13c, 14a, 14b or 15
Waste lines, Sanitary		P-1	PF-1 or PF-2 (IRE) if required by engineer
Waste lines, Acid	To nearest water dilution jet	P-13, 14, 16, 17, 18	PF- 13a, 13b, 13c,14a, 14b or 15

V. Flanges: Flanges shall be furnished and installed at each flanged connection of each type of equipment, tanks, and valves. Faces of flanges being connected shall be furnished alike. Connection of a raised face flange to a flat-faced flange is not permitted. Flanges shall conform to following schedules:

TYPE OF PIPE	FLANGE
Screwed black or galvanized grooved steel pipelines.	125 pound black cast iron screwed flange, flat faced or grooved flange adapters, Victaulic Style 741, Tyco-Grinnell Fig. 71, Gruvlok Fig. 7401, or equal.
Welded or grooved steel pipe, except high pressure steam lines.	150 pound black forged steel welding flanges, 1/16 inch raised face ASTM A 105, Grade II or grooved flange adapters, Victaulic Style 741, Tyco-Grinnell Fig. 71, Gruvlok Fig. 7401, or equal.
Copper and brass pipe or tubing.	150 pound cast bronze, flat-faced flange with solder end or grooved flange adapters, Victaulic Style 641, Tyco-Grinnell Fig. 61, Gruvlok Fig. 6084, or equal.

1. Gasket material for flanged connections shall be full faced or ring type to suit facing on flanges and shall be furnished in accordance with following schedule

SERVICE	TYPE
Cold water	1/16 inch thick neoprene

Grooved end flange adapters supplied with pressure responsive elastomeric Gaskets supplied with grooved flange adapters shall be pre-lubricated by the manufacturer. Grade of gasket to suit intended service.

W. Unions:

1. Unions shall be furnished and installed in accordance with the following requirements (unless flanges are furnished):

   a. At each threaded or soldered connection to equipment and tanks, except in Freon or fuel gas, piping systems, whether indicated or not.
   b. Immediately downstream of any threaded connection to each manually operated threaded valve or cock, and each threaded check valve, yard box or access box except those in Freon piping systems, whether indicated or not.
   c. At each threaded connection to threaded automatic valves (except those in Freon piping systems) such as reducing valves and temperature control valves, whether indicated or not.
   d. If grooved piping is used, couplings shall serve as unions. Additional unions are not required

2. Unions shall be located so that piping can be easily disconnected for removal of equipment, tank, or valve.

PART 3 – EXECUTION

3.01 EXAMINATION

A. Examine areas and conditions under which Work of this Section shall be performed. Correct conditions detrimental to proper and timely completion of Work. Do not proceed until unsatisfactory conditions have been corrected.

3.02 INSTALLATION

A. Provide all materials and equipment for the Work. Furnish and install necessary apparatus, parts, materials, and accessories.

B. Pipe Installation:

1. Install piping parallel to wall and provide an orderly grouping of proper materials and execution.

2. Piping shall clear obstructions, preserve headroom, provide openings and passageways clear, whether indicated or not. Verify the Work of other Divisions to avoid interference.

3. If obstructions or the Work of other Divisions prevent installation of piping or equipment as indicated by the Drawings, perform minor deviations as required by the Architect.

4. Install piping after excavation or cutting has been performed. Piping shall not be permanently enclosed, furred in, or covered before required inspection and testing is performed.

5. Exposed polished or enameled connections from fixtures or equipment shall be installed with no resulting tool marks or threads at fittings. Residue or exposed pipe compound shall be removed from exterior of pipe.

6. Piping shall be concealed in chases, partitions, walls, and between floors, unless otherwise directed or specifically noted on Drawings. When penetrating wood studs, joists, and other wood members, provide such members with

reinforcement steel straps of Continental Steel & Tube Co., ULINE, Independent Metal Strap, or equal.

7. Reduce fitting where any change in pipe size occurs. Bushings shall not be furnished unless specifically reviewed by the Architect, or indicated on Drawings.

8. Piping subject to expansion or contraction shall be anchored in a manner, which permits strains to be evenly distributed. Swing joints or expansion loops shall be installed. Seismic restraints shall be installed so as not to interfere with expansion and contraction of piping. Seismic loops required at all building separations.

9. Immediately after lines have been installed, openings shall be capped or plugged to prevent entrance of foreign materials. Caps shall be left in place until removal is necessary for completion of installation.

10. Couplings shall not be installed except where required pipe runs between other fittings are longer than standard length of type of pipe being installed and except where their installation is specifically reviewed by the Architect.

11. Water piping shall be installed generally level, free of traps, unnecessary offset, arranged to conform to building requirements, clear of ducts, flues, conduits, and other Work. Piping shall be arranged with valves installed to provide for complete drainage and control of system. Piping shall not be installed which causes an objectionable noise from flow of water therein under normal conditions. Refer to Section 23 0500: Common Work Results for Plumbing.

12. Water lines may be installed in same trench with sewer lines, provided bottom of water line is 12 inches minimum above top and to the side of sewer line.

13. Changes in pipe sizes shall be furnished with eccentric reducers, flat on top. Offsets to clear obstruction shall not be installed so as to produce air pockets.

C. Pipe Sleeves and Plates:

1. Provide pipe sleeves of Schedule 40 black steel pipe or Schedule 40 PVC plastic pipe in concrete or masonry walls, footings, and concrete floors below grade. Provide adjustable submerged deck type sleeves at locations where pipes pass through concrete floors, except concrete slab floors on grade, and at locations where soil pipe for floor type water closets passes through concrete floors.

   FOR FIRE RATED WALL PENETRATIONS FOLLOW THE UNIFORM BUILDING CODE.

2. Sleeves shall provide ½ inch clearance around pipes, except plastic pipe shall have 1 inch clearance. Caps of deck type sleeves shall be removed just prior to installation of pipe. Area around sleeves shall be smooth and without high or low spots. Sleeves in walls shall not extend beyond exposed surface of wall. Sleeves in concrete floors and walls shall be securely fastened to forms to prevent movement while concrete is being placed.

3. Piping installed on a roof shall clear the roof surface by 10 inches minimum, with or without insulation. Bottom of individual fittings may infringe on 10 inches clear space but not groups of fittings or fittings located within 27 inches of each other.

4. Stiles shall be provided to facilitate crossing of piping when parallel piping runs are laterally greater than 12 inches out-to-out, or any pipe is higher than 18 inches, and more than 40 feet long or runs between two or more major pieces of equipment or housings greater than 20 feet apart. Stiles shall be not less than 20 inches wide with a minimum tread depth of 10 inches. Where stiles are required, they shall be located so greatest obstructed distance is 30 feet.

5. Where pipes pass through waterproofed walls, floors, or floors on grade, sealant with Link-Seal Modular Seals, or equal, between pipe and sleeve to provide a waterproof joint. Where earth is in contact with pipe on both sides of a wall or foundation, the waterproof joint is not required. Commercial rubber compression units may be furnished instead of sealed sleeves if reviewed by the Architect.

6. A swing joint, or other required device, shall be furnished and installed in hot water lines with 10 feet of sealant or compression joint to allow for expansion.

7. Provide polished, chrome-plated flanges when plumbing pipes pass through walls at plumbing fixtures, etcetera as specified in Section 22 4000 Plumbing. Provide polished steel, chromium-plated split floor and ceiling plates at locations where pipes pass through walls, floors, ceilings, and partitions in finished portion that neatly conceals pipe insert.

8. Pipe sleeves shall be provided where pipes intersect footings or foundation walls and sleeve clearances shall provide for footing settlement, but not less than one inch all around pipe.

D. Welding of Pipe and Qualifications of Welder:

1. Joints above grade or accessible conduit or tunnels in steel piping may be either welded or screwed unless specifically indicated otherwise on Drawings or specified. Joints in below grade steel piping, whether in insulation or not, shall not be welded, unless otherwise indicated.

2. Welded joints in pipe shall be continuous around pipe and shall comply with ASME B31: Code for Pressure Piping, unless otherwise specified.

3. Each pipe weld shall be stamped with welder's identification mark. Welding shall be performed by welders possessing a valid certificate of qualification for welding carbon steel welding pipe in horizontal position (2G) and horizontal fixed position (5G) in accordance with the requirements of Section IX of the ASME Boiler and Pressure Vessel Code, by an Owner-recognized, DSA approved testing laboratory.

4. Before any welder performs welding on the Work, furnish the INSPECTOR with a copy of welder's valid qualification papers and obtain verification. Welder qualification is not valid unless it has been issued while welder was performing work for current employer, and has performed type of work described by qualification in the preceding 3 months.

   REFERENCE: ASME BOILER AND PRESSURE VESSEL CODE, SECTION VIII, UW-29 TESTS OF WELDERS AND WELDING OPERATORS.

5. Welding performed under these Specifications is subject to special tests and inspections including rigid Ultra Sonic Testing (UT) and radiographic inspection at random, in accordance with Technique for Radiographic Examination of Welded Joints by an Owner recognized, DSA approved testing laboratory.

ASME BOILER AND PRESSURE VESSEL CODE, SECTION VIII, UW-51 RADIOGRAPHIC EXAMINATION OF WELDED JOINTS.

E. Unacceptable Welds and Repairs to Welding:

1. Welds containing any of the following types of imperfections shall be deemed defective Work:

   a. Cracks of any type.

   b. Zones of incomplete (in excess of 1/32 inch) fusion or penetration.

   c. Elongated slab inclusions longer than 1/4 inch.

   d. Groups of slag inclusions in welds having an aggregate length greater than thickness of parent metal in a length 12 times the thickness of the parent metal.

   e. Undercuts greater than 1/32 inch.

   f. Overlaps, abrupt ridges or valleys.

2. When a defective weld is detected by examination as outlined above, two additional welds shall be radiographed at locations selected by the Project Inspector. If the two selected welds demonstrate compliant welding, then the two tested welds shall be deemed to be in compliance. Welding revealed by radiographs to be defective Work shall be removed, repaired, and tested by radiograph.

3. If either of the two selected welds demonstrates welding deemed to be defective Work, all welding in that portion of the Work shall be deemed defective Work and either: all welds shall be cutout, prepare new ends for welding and weld to comply with this Specification, or radiograph all welds, removing and repairing only such welding deemed to be defective Work.

4. Repair welding shall be performed in a manner in full compliance with ASME B31. The welded joints or repairs shall be spot examined with UT or radiographic tests in accordance with foregoing requirements.

   REFERENCE, ASME BOILER AND PRESSURE VESSEL CODE, SECTION VIII, UW-52.

5. Owner shall cause to be performed additional random UT and radiographic examinations of welds. Owner shall be responsible for the costs of any UT and radiographic examinations found to be in compliance with specified requirements.

6. Installer shall be responsible for the costs of UT and radiographic re-examinations of welds deemed defective Work and not in compliance with this Specification, and shall repair or replace said welds in accordance with specified requirements.

F. Welding Rods: Submit a written list of materials and proposed type of welding rods.

G. Backing Rings: Backing rings may be submitted for installation provided the Product Data is submitted with the material list.

H. Qualification Tests for Low-pressure Welding:

1. Tests shall be performed on 3-inch standard weight pipe ASTM A53, Grade A, and shall be welded by acetylene and electric arc. Each sample shall consist of 2 pieces, each 10 inches long, with 30-degree bevel at point weld.

2. Two 20-inch samples shall be performed in the 2G and two 20-inch samples in the 5G positions, with positions defined in Section IX, ASME Boiler and Pressure Vessel Code. Welds shall have the reinforcement ground or machined flush to the surface of the pipe before testing. Samples shall be tested as full section tensile.

3. Weld shall develop a load of 90 percent of 50,000 psi, i.e., 45,000 psi or shall develop a fracture in parent metal.

4. Each qualified welder shall carry an identification card listing welder's name, date of test, and type of welding tests passed; signed by the welder and the laboratory.

5. A valid certificate of qualification issued in compliance with requirements of the ASME Boiler Pressure Vessel Code Section IX shall qualify a welder for issuance of a certificate for low-pressure pipe welding.

I. Certificates of Qualification for Welding of Unfired Pressure Vessels:

1. Certificates of qualification shall be issued by a laboratory recognized by the Owner in compliance with the requirements of the ASME Boiler Pressure Vessel Code Section IX. Qualifications shall be for both acetylene and arc welding of Schedule 40 ASTM A53, Type B ,steel welded or seamless pipe in the Horizontal Position (2G) and the Horizontal Fixed Position (5G) as defined by said code.

2. Certificate described above is not valid unless it has been issued while welder was working for his current employer, and unless welder has performed type of work described by certificate in the preceding three months. Requirements for possession of a valid certificate shall not be waived for welders fabricating unfired pressure vessels when the Specifications require compliance with ASME code or when welding pipe carries working pressures greater than 75 psi and temperatures greater than 250 degrees F.

J. Pipe Joints and Connections:

1. Pipe and tubing shall be cut per IAPMO Installation Standards. Pipe shall have rough edges or burrs removed so that a smooth and unobstructed flow shall be provided.

2. Hot tapping of gas lines is strictly prohibited.

2. Threaded Pipe: Joints in piping shall be installed according to the following service schedule:

a. Soap Piping: Litharge and glycerine, or Expando, Gasoila, or equal.

b. Plastic Piping: Teflon pipe joint compound tape.

c. Oxygen Piping: Wash treads with S.P., rinse, blow-dry and apply litharge and glycerine.

d. Cleanout Plugs: No compound shall be used. After inspection and test, plugs shall be removed, cleaned, greased, and replaced.

b. Other services furnish sealant, suitable and as reviewed by the Architect.

3. Threads on pipe shall be cut with sharp, clean, unblemished dies and shall conform to ANSI/ASME B2.1 for tapered pipe threads.

4. Joint compounds shall be smoothly placed on male thread and not in fittings. Threaded joints shall be installed tight with tongs or wrenches and sealant of any kind is not permitted. Failed joints shall be replaced with new materials. Installation of thread cement or sealant to repair a leaking joint is not permitted.

5. Sharp-toothed Stillson, or similar wrenches, is not permitted for the installation of brass pipe or other piping with similar finished surfaces.

K. Copper Tubing and Brass Pipe with Threadless Fittings:

1. Silver brazed joints shall be used for attaching fittings to non-ferrous metallic refrigerant piping.

2. Non-pressure gravity fed condensate lines may be soldered with 95/5 solder.

3 Silver brazing alloy, Class BCUP-5. Surfaces to be joined shall be free of oil, grease, and oxides. Socket of fitting and end of pipe shall be thoroughly cleaned with emery cloth and wiped to remove oxides. After cleaning and before assembly or heating, flux shall be installed to each joint surface and spread evenly. Heat shall be applied in accordance with instructions in the Copper Tube Handbook issued by Copper Development Associates. Joints constructed of rough bronze fittings shall be provided as recommended by manufacturer.

4. Do not overheat piping and fittings when installing silver brazing.

5. Joints in non-ferrous piping for services not covered above shall be installed with solder composed of 95/5 tin/antimony, ASTM B32, Grade 5A. Surfaces to be jointed shall be free of oil, grease, and oxides. Sockets of fitting and end of pipe shall be cleaned with emery cloth to remove oxides. Solder flux shall be sparingly installed and solder added until joint is completely filled. Do not overheat. Excess solder, while plastic, shall be removed with a small brush in order to provide an uninterrupted fillet completely around joint. Random inspection of joints shall be conducted by Project Inspector to ensure joints are lead-free.

6. Grooved end joints for copper piping shall be assembled in accordance with the latest manufacturer recommendations. Pipe ends shall be clean and free from indentations, projections, and roll marks in the area from pipe end to groove for proper gasket sealing. Grooving tools shall be as manufactured by Victaulic, RIDGID, MAG Tool, or equal.

L. Ring-Type Pipe: Joints shall be installed in accordance with manufacturer's instructions with grooved couplings, fittings and rubber rings. Couplings and pipe shall be compatible and of the same manufacturer. Rings shall be accurately located and installed by grooves in coupling. Pipe shall be installed with zero deflection unless otherwise specified. Pressure pipe shall be furnished with thrust blocks at each offset point.

M. Welded Pipe Joints:

1. Joints in welded steel pipelines shall be installed by oxyacetylene or electric arc process. Welding shall be continuous around pipe and provided as specified.

2. Butt welds shall be of the single V-type, with ends of pipe and fittings beveled approximately 37 ½ degrees. Piping shall be aligned before welding is started with the alignment maintained during welding.

3. Welds for flanges and socket fittings shall be of the fillet type with a throat dimension not less than pipe wall thickness.

N. Grooved End Pipe Joints: Grooved end joints for carbon steel piping shall be assembled in accordance with the latest manufacturer recommendations. Pipe ends shall be clean and free from indentations, projections, and roll marks in the area from pipe end to grove for proper gasket sealing. Grooving tools shall be as manufactured by Victaulic, RIDGID, MAG Tool, or equal.

O. Joints shall be Vic-Press 304TM, or equal, made with Victaulic Series 'PFT' tools and the appropriate sized jaw. Pipe shall be certified for use with Vic-Press 304TM system, and shall be square cut, properly deburred and cleaned, and marked at the required location to insure full insertion into the fittings and/or couplings.

P. Polyethylene (Plastic) Pipe:

1. Joints shall be installed by the heat fusion method, in accordance with manufacturer's recommendations and IAPMO installation standard IS 12, for natural gas.

2. Pipe Riser at Meter, Regulator and Building Wall: Prefabricated, anodeless type, utilizing a grade level transition between underground polyethylene pipe and gas supply steel pipe of riser outlet, R. W. Lyall Co., or equal. Below grade to above grade transition shall be installed in a welded, epoxy coated, steel casing.

3. Connections to Existing Pipe Line or Branch:

a. Steel-to-plastic (PE): Provide manufacturer's prefabricated standard transition fitting, transition from epoxy-coated steel pipe to plastic, R. W. Lyall Co., or equal.

b. Plastic-to-plastic, PVC to PE: Provide manufacturer's prefabricated standard transition fitting, transition from PVC to epoxy-coated steel pipe to PE; R.W. Lyall Co., or equal..

c. Plastic-to-plastic, PE to PE: Provide manufacturer's standard fused tapping tee assembly with shut-off feature.

4. Provide PE reinforcing sleeves where PE pipe is fused to multi-saddles, service punch tee, reducing tees, transition fittings and anodeless risers.

Q. Valves: Valves shall conform to the following:

1. Piping systems shall be furnished with valves at points indicated on Drawings and specified, arranged to provide complete regulating control of piping system throughout building and the Project site.

2. Valves shall be installed in a neat grouping, so that parts are easily accessible and maintained.

3. Valves shall be full size of line in which they are installed, unless otherwise indicated on Drawings or otherwise specified, and shall be one of types specified.

4. Provide chain operators on valves 2-inch and larger located 7 feet or more above the servicing floor level.

5. Valves for similar service shall be of one manufacturer.

6. Except where otherwise specified, valves shall be Belimo, Victaulic, Stockham, Crane, Jenkins, Milwaukee, Hammond, American, NIBCO, Hoffman, or equal.

7. Ball valves below grade in yard boxes shall have stainless steel handles.

8. Hose bibs in dense garden areas shall be ¾ inch in size with one hose bib in the lunch pavilion 1 inch in size. Other hose bibs shall be ¾ inch lock shield type. Bibs shall be furnished with vacuum breaker protection.

9. Safety valves and pressure relief valves shall have stamp of approval as required by ASME and shall be provided with annual test lever. Where a hot water storage tank is heated by means of a coil, pressure relief valve shall have a steam BTU discharge rating of the coil. Discharge pipe from safety or pressure relief valves shall be not less than one pipe size larger than inlet pipe size of valve. Discharge pipe shall terminate as indicated and shall be free of traps. In addition to locations specified, pressure relief valves shall be installed in the following locations:

    a. On discharge side of each pressure-reducing valve.

    b. On each water heater connected to a hot water storage tank and other pressure vessels.

    c. On cold water line to each water heater or hot water storage tank when there is a check valve, backflow prevention valve or similar device between water heater or hot water storage tank and meter or relief valve at the pressure reducing valve assembly.

    d. On discharge side of each air compressor.

    e. On each air receiver connected to an air compressor.

10. Temperature relief valves and combination temperature and pressure relief valves shall be as specified and furnished as set forth in this Section. Discharge pipe from relief valves shall be not less than discharge area of valve or valves it connects, based on discharge area of valves, and shall terminate as indicated and free of any traps. Valves shall be installed at following locations:

11. A combination temperature and pressure relief valve or combination of valves on each heating hot water storage tank. Temperature sending element shall extend into water inside tank.

12. Manual air vent valve assemblies shall be installed at each high point of hot water space heating and chilled water piping systems. Valves shall discharge

through 1/4 inch diameter copper tubing and drain to nearest floor sink. Automatic type air vent valve shall only be installed where specifically indicated. Radiator, convectors, and finned pipe convectors shall be fitted with packless radiator valves, angle or straight pattern. Each convector or radiator installed as part of a space hot water heating system shall be furnished with a manual-type air vent valve.

R. Strainers: Strainers shall be installed on each water main (except for fire line) downstream of the meter, above grade, when a pressure regulator assembly is not installed. Main strainer shall be of Y-flange or groove type. On closed loop chilled and heating hot water systems pump systems, a strainer shall be installed at each pump inlet and upstream of each flow control valve assembly. The control valve assembly may include a modulating temperature control valve and a flow-limiting valve, manufactured by Griswold, AutoFlow, Flow Control Industries, Inc., or equal.

S. Hangers and Supports:

1. Piping shall be securely fastened to building structure by approved iron hangers, supports, guides, anchors, and sway braces to maintain pipe alignment to prevent sagging and to prevent noise or excessive strain on piping due to uncontrolled or seismic movement under operating conditions. Hangers and supports shall conform to Manufacturer's Standardization Society Specification SP-69. Hangers shall be relocated as required to correct unsatisfactory conditions that may become evident when system is placed into operation. Appliances, heat exchangers, storage tanks, and similar equipment shall be securely fastened to structure in accordance with seismic requirements. Outdoor metal hangers and supports shall be hot-dipped galvanized steel, unless otherwise specified.

2. Hose faucets, compressed air outlets, and similar items at ends of pipe branches shall be rigidly fastened to building construction near point of connection.

3. Piping shall not be supported by wire, rope, wood, plumbers' tape, or other non-recognized devices.

4. Hangers and supports shall be designed to support weight of pipe, fittings, weight of fluid and weight of pipe insulation, and shall have a minimum factor of safety of five, based on ultimate tensile strength of material installed.

5. Burning or welding of any structural member under load is not permitted. Field welding not specified on Drawings or reviewed Shop Drawings is not permitted without review by Architect and DSA.

6. Burning holes in beam flanges or other structural members is not permitted without review by the Architect and DSA.

7. Pipe hangers on piping covered with low temperature insulation shall be installed on outside of insulation and not in contact with pipe unless otherwise detailed on Drawings. Insulation shall be protected by 18 gage galvanized steel shield, with a minimum length of 10 inches, installed completely around pipe covering between covering and hanger. Installing hangers directly on pipe and butting adjoining sections of insulation against hanger is permitted provided void and hanger rod are properly insulated and sealed so that no sweating occurs at hangers.

8. Hanger rods shall be fastened to structural steel members with suitable beam clamps. Clamps shall be Tolco, Carpenter & Patterson, Fee and Mason, or equal, as follows:

    a. Tolco I beam, Fig.62 for maximum 1000 pounds.

    b. Tolco I or WF beam, Fig. 329, for maximum of 1290 pounds.

9. Hanger rods shall be fastened to concrete inserts in concrete slabs or beams. Inserts shall be Tolco, Carpenter & Patterson, Fee and Mason, or equal, as follows:

    a. Tolco Fig.310 for maximum of 600 pounds.

    b. Tolco Fig. 309 for maximum of 1140 pounds.

10. For fastening to wood ceilings, beams, or joists, furnish Grinnell Fig. 128R, Grinnell Fig. 153, Tolco 78, or equal pipe hanger flange fastened with drive screws. Under wood floors, 3/8 inch hanger rods shall be hung from 2-inch by 2-inch by 1/4 inch angle clips 3 inches long, with 2, staggered 10d nails, clinched over joist.

11. Hanger rod sizes for copper, iron, or steel pipe: 3/8 inch for pipe sizes ½ inch through 2-inch, ½ inch for pipe sizes 3-inch, 4-inch and 5-inch, 5/8 inch for pipe size 6-inch, and ¾ inch for 8-inch and 10-inch pipe.

12. Turnbuckles, if furnished, shall provide a load carrying capacity equal to that of the pipe hanger with which they are being installed.

13. Pipe hangers shall be of same size, or nearest larger manufactured size available, as pipe or tubing on which they are being installed.

14. Hangers, clamps, and guides furnished for support of non-metallic pipe shall be padded with 1/8 inch thick rubber, neoprene, or soft resilient cloth.

15. Where special pipe-supporting requirements in the Specifications conflict with any standard requirements specified herein, the Specification requirements shall govern.

16. Vertical Piping:

    a. Vertical pipe risers shall be securely supported with riser clamps of recognized type. Risers in reinforced concrete buildings shall be furnished with extension clamps fastened to pipe above each concrete floor slab with extended arms of clamp to rest on slab. Clamps shall be provided with lead or Teflon liners when installed on copper tubing. Clamps shall be plastic-coated when installed on non-ferrous pipe or tubing.

    b. Copper tubing in sizes 1 ½-inches and larger and steel pipelines passing up through building shall be supported at each floor of building or every 15 feet whichever is less.

    c. Copper tubing sizes 1 ¼-inches and smaller shall be supported at not intervals not more than 6 feet on center. Special provisions shall be

installed for vertical lines subject to expansion and contraction caused by operating temperature differences.

d. Vertical cast iron pipelines shall be supported from each floor and at its base. Malleable iron or steel pipe clamps with minimum thickness of 1/4 inch shall be furnished and fastened around pipe for support.

17. Horizontal Piping:

a. Pressure piping on roofs shall be supported from stands, trapezes, or structures so that the bottoms of pipes clear the roof surface by 10 inches.

b. Insulated steam and space heating hot water insulated condensate lines, insulated domestic hot water supply and return piping shall be supported with Tolco Figure 4, B-Line Figure B3140, Grinnell Figure 212, or equal, steel hangers with welded eye rods to permit hinge movement at point of attachment of hangers. Hinge movement at point of support shall be provided by welded eye linked rods Tolco Figure 101L, B-Line Figure B3211X, Grinnell Figure 278, or equal.

c. Domestic cold water piping, water supply and return piping, condenser water piping, insulated refrigerant piping gas piping, compressed air piping, cast iron soil piping, galvanized steel vents, waste and downspout piping and glass to be supported with Tolco Figure 1, B-Line Figure B3100, Grinnell Figure 260, or equal, hangers with rods, turnbuckles and inserts suitable for above hangers.

d. Maximum hanger and support spacing shall conform to CPC schedule for horizontal piping installed above grade.

18. A hanger or support shall be installed close to the point of change in direction of a pipe run, in either a horizontal or vertical plane.

19. When practicable, supports and hangers for cast iron soil pipe shall be installed as close as possible to joints and when hangers or supports are not located within one foot of a branch line fitting, an additional hanger or support shall be installed at fitting.

20. In systems where grooved piping is used, couplings shall be provided with angle pattern bolt pads to comply with support and hanging requirements of ANSI/ASME B31.1, ANSI/ASME B31.9, and NFPA Pamphlet 13.

T. Flashings:

1. Each pipe, duct, or gas-fired equipment vent passing through roof shall be installed with waterproof flashing.

2. Flashing or flanges on pipes, vents, and ducts passing through a tile or slate roof shall be constructed of sheet lead. Flashing for pipes and heater vents passing through a roof shall be 4 pound soft sheet lead. Flashing and flanges for ducts and heater vents passing through exterior walls shall be 22 gage sheet metal. Flanges and flashing shall be installed waterproof at point of connection with pipe or duct. No soldered joints on roof flashings will be allowed.

3. Lead flashing and flanges shall be constructed of 4 pound sheet lead with burned joints. Flange of lead flashing or lead flange on a duct shall extend out onto roof a minimum of 12 inches from pipe or duct. Lead flashing shall extend up the pipe or duct not less than 7 inches.

4. Sheet metal flashing shall be constructed of 24 gage galvanized sheet steel. Flanges on these flashings shall extend out onto roof a minimum of 10 inches from pipe or duct. Flanges on ducts through exterior walls shall extend out from duct a minimum of 2 ½ inches. Flanges on gas-fired equipment single-wall vents shall be of ventilated type. Type B gas vents through a roof shall be furnished with non-ventilated flashing as per NFPA Pamphlet 211.

5. Cast iron, steel, brass, and copper pipe, which terminates less than 18 inches above roof, shall be furnished with a combination counter-flashing and vandal-proof hood for protection against water, birds and foreign matter. Cast iron, steel, brass and copper pipe, which does not terminate within 18 inches of roof, shall be furnished with a counter-flashing sleeve. Pipe, which terminates more than 18 inches above roof, shall be furnished with protection against entrance of water, birds, and foreign matter.

6. Counter-flashing and combination counter-flashing sleeves and vandal-proof hoods shall be cast iron, vandal-proof, threaded, sealed or approved gas-heated sleeve type. Counter-flashing sleeves on each of these items shall extend down over flashing a minimum of ¾ inch.

7. Flashing and flanges on ducts shall be installed waterproof at point of connection to the duct by riveting and soldering. Storm collars shall be securely screwed and installed waterproof around appliance vent pipe immediately above flashing.

8. Vent piping above roof shall be furnished with a combination counter-flashing sleeve and vandal-proof hood.

U. Equipment Installation: Install roof or floor mounted equipment on level platforms, housekeeping pads or curbs and provide sound, vibration and seismic control measures per Section 23 0548 even if not indicated on Drawings.

END OF SECTION

SECTION 22 05 53

PLUMBING IDENTIFICATION

PART 1 – GENERAL

1.01 SUMMARY

A. Section Includes: Marking and identification on mechanical piping systems, ducts, controls, valves, and apparatus.

B. Related Requirements:

1. Division 01: General Requirements

2. Section 21 1313: Fire-Suppression Sprinkler Systems.

3. Section 22 0513: Basic Plumbing Materials and Methods.

4. Section 22 1000: Plumbing.

1.02 SUBMITTALS

A. Submit in accordance with Division 01 and Section 22 0500: Common Work Results for Plumbing.

B. Submit product data and installation instructions for each item specified.

C. Submit Samples of materials.

1.03 QUALITY ASSURANCE

A. Comply with provisions of:

1. Section 22 0500: Common Work Results for Plumbing.

2. ANSI/ASME A13.1: Scheme for the Identification of Piping Systems.

3. APWA: Uniform Color Code.

4. IAPMO: Uniform Plumbing Code (UPC)

PART 2 – PRODUCTS

2.01 MATERIALS

A. General: Piping systems, controls, valves, apparatus, etc., except those that are installed in inaccessible locations in partitions, walls, and floors, shall be permanently identified.

2.02 VALVES

A. Furnish prepared chart or diagram for each piping system, indicating by identifying letter or model number of each valve in the system, its location, and function.

B. Install charts in aluminum frame with clear glass front and secure on wall where designated by the Project Inspector.

C. Bind copies of each chart in operating instructions manual.

D. Provide each valve with a brass, aluminum, or plastic disc, not less than 1-1/4 inches diameter bearing engraved numbers corresponding to those indicated on chart. Fasten discs to valve with No. 14 brass wire.

E. Provide an additional tag for safety valves and other valves that could be hazardous to safety and health of occupants. Distinguish these tags from regular valve tags by color (such as yellow with black letters, and marked "Danger"); submit Sample tag to the Architect for review.

2.03 INSTRUMENTS AND CONTROLS

A. Identify panel-mounted instruments and controls with engraved bakelite nameplates permanently affixed to panel boards.

B. Identify alarm indicating devices and alarm reset devices by nameplates.

C. Identify automatic valves, flow switches, and pressure switches, with embossed aluminum or plastic tape affixed to controller, indicating service and setting.

2.04 EQUIPMENT

A. Identify each major piece of equipment with engraved bakelite nameplates permanently affixed to the equipment, indicating the room numbers it services, Equipment identification designation shall be the same to its designation indicated on the “As-Built Drawings”. Room numbers in the nameplates shall correspond to the final room numbers.

2.05 ABOVE GRADE PIPE IDENTIFICATION

A. Identify pipes by means of colored labels with directional flow arrows and identification of the pipe content, in conformance to ANSI/ASME A13.1 or the UPC.

B. Materials: Precoiled acrylic plastic with clear polyester coating, all-temperature, self-adhering, as manufactured by Brady, Brimar Industries, Seton, Stranco, Inc., or equal.

C. Size:

Outside Diameter of Pipe or Insulation (in inches)	Length of Color Field (in inches)	Size of Letter (in inches)
¾ to 1 ¼	8	½
1 ½ to 2	8	¾
2 ½ to 6	12	1 ¼

8 to 10	24	2 ½
over 10	32	3 ½

D. Locations:

1. On accessible piping, whether insulated or not (including mechanical rooms, attic and ceiling spaces); except that labels shall be omitted from piping where contained material is obvious due to its connection to fixtures (such as faucets, water closets, etcetera.).

2. Near each valve and branch connection in such accessible piping.

3. At each pipe passage through wall or floor.

4. At not more than 20 feet spacing on straight pipe run between bands required in 2 and 3 above.

5. At each change in direction.

E. Application: Install on clean surfaces free of dust, grease, oil, or any material that will prevent proper adhesion. Replace non-adhering or curling labels with new labels.

F. Color Schedule:

Content of Pipe	Legend	Background Color	Lettering Color
Domestic cold water	Domestic. C.W.	Green	White
Non-potable cold water	Caution: Non-potable Water Do Not Drink (1)(2)	Purple	Black
Domestic hot-water 140ºF	Domestic H.W. 140ºF	Blue	Black
Sanitary waste	San waste	Green	White
Sanitary vent	San vent	Green	White
Storm drain or downspout	Storm drain	Green	White
Indirect drain	Ind drain	Green	White
Sump pump discharge	Pump discharge	Green	White
Fire sprinkler supply	Fire Sprinkler supply	Red	White
Fire sprinkler drain	Sprinkler drain	Red	White
Fuel oil	Diesel oil	Yellow	Black
Gas	Gas	Yellow	White
Reclaimed Water	Caution: Reclaimed Water Do Not Drink (1)(3)	Purple	Black

H. Notes on Schedule:

1. Note (1) indicates 2 ¼ inch by 1 inch yellow label with ½ inch letters reading UNSAFE WATER at one end of primary label.

   Note (2) words should read “CAUTION: NONPOTABLE WATER DO NOT DRINK.” with international *do not drink* symbol.

   Note (3) words should read “CAUTION: RECLAIMED WATER DO NOT DRINK.” with international *do not drink* symbol.

2.06 UNDERGROUND PIPE

A. Detectable Marking Tape:

1. Provide and install detectable marking tape along buried piping. Tape shall be specifically manufactured for marking and locating underground utilities with electronic equipment. Tape shall be acid and alkali resistant, and manufactured with integral wires or foil backing, encased with protective cladding. Tape shall be a minimum of two inches in width.

2. Manufacturer: Reef Industries, Inc., Advantage Brands, Inc., Northtown Company, Mutual Industries, Inc., or equal.

3. Detectable marking tape shall be color-coded per APWA Color Code:

   a. Yellow: Oil and gas.

   b. Blue: Water, irrigation and slurry lines.

   c. Green: Sewer and drain lines.

B. Tracer Wire:

1. Solid copper wire type THWN, 12 AWG gauge, with heat and moisture resistant insulation.

PART 3 – EXECUTION

3.01 INSTALLATION

A. Correct detrimental conditions prior to commencing the Work of this Section. Install markers and identification tags as specified with materials and installation procedures recommended by manufacturer.

B. Place tracer wire on top of non-metal utility lines allowing some slack. Do not wrap tracer wire around pipe. Fasten tracer wire in place at approximately 10 feet on centers with non-metal ties.

C. Install underground detectable pipe marking tape continuously buried 8 to 10 inches above the buried utility pipe. Wrap tape on pipe risers up to a height of 12 inches above grade.

3.02 CLEANUP

A. Remove rubbish, debris, and waste materials and legally dispose of off the Project site.

END OF SECTION

SECTION 22 07 00

PLUMBING INSULATION

PART 1 – GENERAL

1.01 SUMMARY

A. Section Includes:

1. Insulation for plumbing piping.

B. Related Requirements:

1. Division 01: General Requirements.

2. Section 22 0500: Common Work Results for Plumbing.

3. Section 22 0513: Basic Plumbing Materials and Methods.

4. Section 22 0553: Plumbing Identification.

5. Section 22 1000: Plumbing.

1.02 REFERENCES

A. American Society for Testing and Materials International (ASTM):

1. ASTM C302 - Standard Test Method for Density and Dimensions of Preformed Pipe-Covering-Type Thermal Insulation.

2. ASTM C411 - Standard Test Method for Hot-Surface Performance of High-Temperature Thermal Insulation.

3. ASTM C423 - Standard Test Method for Sound Absorption and Sound Absorption Coefficients by the Reverberation Room Method.

4. ASTM C533 - Standard Specification for Calcium Silicate Block and Pipe Thermal Insulation.

5. ASTM C547 - Standard Specification for Mineral Fiber Pipe Insulation.

6. ASTM C1104 - Standard Test Method for Determining the Water Vapor Sorption of Unfaced Mineral Fiber Insulation.

7. ASTM E84 - Standard Test Method for Surface Burning Characteristics of Building Materials.

8. ASTM G21 - Standard Practice for Determining Resistance of Synthetic Polymeric Materials to Fungi.

B. Underwriters Laboratories, Inc.

1. UL 723 - Test for Surface Burning Characteristics of Building Materials.

C. National Fire Protection Association:

1. NFPA 255 - Standard Method of Test of Surface Burning Characteristics of Building Materials.

D. California Code of Regulation Title 24.

1. California Green Building Standards Code.

1.03 SUBMITTALS

A. Submit in accordance with Division 01 and Section 22 0500: Common Work Results for Plumbing.

1. Complete material list of items to be furnished and installed under this Section.

2. Manufacturer's specifications and other data required demonstrating compliance with the specified requirements.

3. Shop Drawings, catalog cuts and manufacturer's data indicating insulation, jacketing, adhesives, and coating. Insulating materials shall be certified by manufacturer to comply with the California quality standards for insulating materials.

4. Display sample cutaway sections.

5. Manufacturer's recommended method of installation procedures, which will become part of this Section.

1.04 QUALITY ASSURANCE

A. Qualifications of Manufacturer and Installer, Materials, Fabrication, Execution, and Standard of Quality: Comply with provisions stated under Section 22 0500: Common Work Results for Plumbing and Section 22 0513: Basic Plumbing Materials and Methods.

B. Insulation Work shall be in accordance with the California Building Energy Efficiency Standards, CBC, and Uniform Mechanical Code and the California Green Building Standards Code.

C. Test Ratings:

1. Comply with provisions stated under Section 22 0500 and 22 0513 with emphasis on ASTM E84, NFPA 255, or UL 723. ASTM C167, ASTM C302, UL label or listing of satisfactory test results from the National Institute of Standards and Technology, or a satisfactory certified test report from an acceptable testing laboratory. Approval by the State Fire Marshal is required.

2. Furnish labels, legibly printed with the name of the manufacturer or listings indicate that fire hazard ratings do not exceed those specified for materials proposed for installation. Flame spread index of not more than 25 and smoke developed rating not exceeding 50.

3. Tests shall be performed on each item individually when insulation, vapor barrier covering, wrapping materials, or adhesives are installed separately at the Project site.

4. Test insulation, vapor barrier covering, wrapping materials and adhesives as an assembly when they are factory composite systems.

D. Regulatory Requirements: Insulation furnished and installed under this Section shall meet minimum legal requirements of the Building Energy Efficiency Standards adopted and incorporated in the California Energy Commission, Title 24, Part 2, Chapters 2 through 53 and the California Green Building Standards Code unless otherwise noted, for the piping,

E. Chemically based products such as sealers, primers, fillers, adhesives, etcetera must meet the California air quality regulations.

1.05 PRODUCT HANDLING

A. Protection, Replacement, Delivery and Storage: Comply with provisions stated under Sections 22 0500: Common Work Results for Plumbing and 22 0513: Basic Plumbing Materials and Methods.

PART 2 – PRODUCTS

2.01 MATERIALS

A. General:

1. Insulating material shall be fire resistant, non-corrosive, shall not break, settle, sag, pack or disintegrate under vibration, nor absorb more than 1 percent moisture by weight.

2. Insulating material shall be furnished with thickness indicated in Table 1, and shall furnish thermal resistance in the range of R-4.0 to 4.6 in accordance with inch at 75 degrees F. For any other value of R, insulation thickness shall be calculated accordingly and submitted for review.

3. Asbestos in any quantity in insulating material is not permitted.

4. Provide insulation materials, adhesives, coatings, sealants, fitting covers, and other accessories with a fire hazard rating not to exceed 25 for flame spread, 25 for fuel contributed and 50 for smoke developed, except for materials listed as follows:

a. Nylon anchors for installing insulation to equipment.

b. Treated wood blocks.

5. Flame-proofing treatments subject to moisture damage are not permitted.

TABLE 1 - MINIMUM PIPING INSULATION THICKNESS (1)

Insulation Thickness Required (in inches)

Piping System Type	Temp. Range (degrees F)	Runouts up to 2	1 and less	1.25 to 2	2.5 to 4	5 to 6	8 and larger

		(2)					
Service Water Heating Systems (recirculating, piping supply and return)							
Hot Water	Up to 180	0.5	1.0	1.0	1.5	1.5	1.5
Condensate Drain	½ inch minimum insulation thickness.	0.5	0.5	0.5	0.5	0.5	0.5
From A/C Equipment:	Insulate condensate drain lines within building, in room, inside walls and above ceilings.	0.5	0.5	0.5	0.5	0.5	0.5

NOTES: (1) For piping exposed to ambient temperatures, increase thickness by 0.5 inch.

(2) Runouts to individual terminal units, not exceeding 12 feet in length.

B. Lagging Adhesives: Shall be nonflammable and fire-resistant and shall have a maximum flame spread index of 25 and a maximum smoke developed index of 50 when tested in accordance with ASTM E84. Insulation finished with canvas shall be provided with laps adhered in accordance to manufacturer's recommendation. A finish coat of same material shall be applied to entire outer surface of lagging cloth at coverage specified by manufacturer.

C. Canvas Jackets: Provide 6 ounce, in accordance with square foot minimum, 48 by 48 thread count canvas jacketing.

D. Insulation Jackets:

1. Exterior insulation exposed to weather shall be weatherproofed with Childers aluminum jacketing as basis of design, or Pabco, RPR, or equal. Jacketing shall be manufactured from 1100, 3105 or 5010 aluminum alloy with 3/16 inch corrugations. Smooth or embossed jackets may be permitted in special situations to match an existing installation. Jacketing shall be furnished with an integrally bonded moisture barrier over entire surface in contact with insulation. A minimum thickness of 0.016 aluminum jacketing is to be provided on ducts and piping. A minimum thickness of 0.020 shall be provided on tanks, equipment, and heat exchangers.

2. Insulated elbows, of 90 degrees and 45 degrees, with a nominal iron pipe size of ½ inch to 8-inch shall be provided with Childers aluminum Ell-Jacs insulation covers as basis of design, or Pabco, RPR, or equal, manufactured from 1100 aluminum alloy of 0.024 inch thickness. Insulated elbows with a nominal pipe size of 10-inch to 18-inch shall be provided with Childers 4-piece aluminum Ell-Jacs as basis of design, or Pabco, RPR, or equal.

3. Tees, Flanges, and Valve Insulation in Conjunction with Aluminum Jacketing: Furnish Childers Aluminum Special Fabrications Insulation Covers as manufactured by Childers Products Company, Pabco, RPR, or equal.

E. Adhesives: Adhesives shall be water based, UL Classified, meet the requirements of NFPA 90A and NFPA 90B, have been tested according to relevant ASTM requirements,

and be acceptable to the State Fire Marshal. Name, type and method of installation shall be submitted for review.

F. Valve and Fitting Cover: When installed in conjunction with PVC jacketing, furnish Zeston 25/50 rated polyvinyl chloride fitting covers as manufactured by Johns Manville, Knauf Insulation, Speedline, or equal.

2.02 DOMESTIC HOT WATER PIPING SYSTEM INSULATION

A. General: Insulate domestic hot water supply and return piping, including valves, strainers and fittings with insulation thickness as indicated on Table 1.

B. Materials:

1. Classes of Insulation:

a. Class A: Glass fiber molded pipe insulation suitable for service temperatures up to 850 degrees F. Pipe insulation shall be one piece, preformed, and provide a minimum R factor of 4.0 at 75 degrees F mean temperature. Insulation shall be faced with all-purpose fire retardant vapor barrier jacket. Pipe insulation shall be Johns Manville Micro-Lok, Knauf Redi-Klad 1000, Owens Corning FIBERGLAS Pipe Insulation SSL II-ASJ, or equal.

b. Class B: Flexible open-cell melamine (foam insulation) suitable for service temperature -150 degrees F to 400 degrees F. Thermal conductivity at 75 degrees F, K= 0.26. Pipe insulation, one-piece pre-formed, laminated to heavy non-reinforced PVC jacket, with locking track, factory installed to jacket, to snap insulation and jacket onto pipe. Similar to TechLite 079 Series as manufactured by Accessible Products Co., or equal. Installation shall comply with manufacturers recommendations.

c. Class C: Mineral fiber pipe insulation suitable for service temperatures up to 1200 degrees F. Pipe insulation shall be one-piece, preformed up to 3 inches thick, and provide a minimum R factor of 4.0 at 75 degrees F mean temperature. Insulation shall be faced with all-purpose fire-retardant vapor barrier jacket. Pipe insulation shall be 8 pounds in accordance with cubic foot density by Roxul Techton 1200, Fibrex COREPLUS 1200, Industrial Insulation Group, LLC (IIG) MinWool-1200, or equal.

2. Locations and Class of Insulation Required:

TABLE 2 – LOCATIONS AND CLASS OF INSULATION REQUIRED

LOCATION	CLASS OF INSULATION
Equipment Room	A, B or C
Other Locations	A, B or C

3. Fittings on indoor piping shall be covered with flush, hand-wrapped Class A, B, or C insulation, to match the adjoining pipe insulation and covered with polyvinyl chloride fitting covers: Zeston 2000 25/50 by Johns Manville, Knauf Insulation Proto PVC Fitting Cover, Speedline Polyco Smoke Safe, or equal.

4. Adhesive: Fibrous Adhesive to bond calcium silicate to itself and non-porous surfaces.

PART 3 – EXECUTION

3.01 INSTALLATION

A. Except as specified herein, install material in accordance with recommendations of manufacturer. Do not install insulation materials until tests specified in other sections are completed. Remove foreign material such as rust, scale, or dirt. Surfaces shall be clean and dry. Maintain insulation clean and dry at all times.

B. On cold surfaces where a vapor barrier must be provided and maintained, insulation shall be installed with a continuous, unbroken moisture and vapor seal. Hangers, supports, anchors, or other projections that are fastened to cold surfaces shall be insulated and vapor sealed to prevent condensation.

C. Surface finishes shall be extended in such a manner as to protect raw edges, ends, and surfaces of insulation.

D. Pipe or duct insulation shall be continuous through walls, ceiling or floor openings, or sleeves; except where firestop or firesafing materials are required.

E. Metal shields shall be installed between hangers or supports and the piping insulation. Rigid insulation inserts shall be installed between the pipe and the insulation shields. Inserts shall be of equal thickness to adjacent insulation and shall be vapor sealed accordingly.

F. Insulation shall not be installed in the following locations unless otherwise noted:

1. On unions, flanged connections or valve handles.

2 Over edges of any manhole, clean-out hole, clean-out plug, and to restrict opening or identification of access.

3. Over any label or stamp indicating make, approval, rating, inspection, or similar data, unless provision is made for identification and access to label or stamp.

3.02 INSTALLATION OF DOMESTIC HOT WATER PIPING SYSTEM INSULATION

A. General: Domestic hot water, tempered water supply and return piping and condensate return piping, after having been tested, shall be cleaned and insulated.

B. Application: Insulate condensate return piping, domestic hot water supply and return, including tempered supply and return piping in accordance with manufacturer's instructions and as specified herein.

1. Install insulation on valve bodies up to valve bonnet. Fill void in saddles, in accordance with Section 22 0513: Basic Plumbing Materials and Methods, with insulation and seal joints.

2. Install insulating material to fittings, valves, and strainers and smooth to thickness of adjacent covering. Leave strainer clean-out plugs accessible. Covers fabricated from polyvinyl chloride shall be furnished.

C. Insulation Jackets in Exposed Indoor Locations:

1. Cover completed insulation with canvas jacket tightly pasted to covering with lagging adhesive. Lap jacket seams 1 1/2-inch minimum. Finish entire jacket with coating of undiluted adhesive.

2. Equivalent factory applied pre-sized, glass fiber reinforced, or glass fiber jackets may be furnished. Seal jacket seams with adhesive in accordance with manufacturer's instructions.

3. Johns Manville Zeston 2000, Knauf Insulation Proto PVC Fitting Cover, Speedline Polyco Smoke Safe, or equal, fitting covers may be furnished, with molded or segmented insulation equal to specified insulation applied to fittings. Secure covers in accordance with manufacturer's instructions.

4. In addition to above requirements, cover exposed insulated piping within a distance of 8 feet above floors with 26 gage galvanized steel jacket. Omit jacket in areas accessible only to maintenance personnel, such as mechanical equipment rooms, utility corridors, accessible pipe tunnels and manholes.

D. Concealed Indoor Locations: Cover insulation over fittings, valves, and strainers with canvas. Provide pipe insulation with factory or field applied standard jacket of 4 ounce minimum canvas, fiberglass cloth, or glass fiber reinforced jacket. Seal jacket laps with adhesive in accordance with manufacturer's instructions.

E. Exposed Outdoors: In addition to canvas or fiberglass cloth cover, pipe insulation exposed to weather shall be provided with an additional 0.016 inches thick aluminum jacket with 2-inch lap connected with one inch hem overlap joint located on side of pipe and turned down to shed water. Jacket shall be strapped 12 inches on center with ½-inch wide stainless steel strapping and wing seals. Aluminum jacket shall be mitered to fit fittings.

3.03 CLEANUP

A. Remove rubbish, debris, and waste materials and legally dispose of off the Project site.

3.04 PROTECTION

A. Protect the Work of this Section until Substantial Completion.

END OF SECTION

SECTION 22 10 00

PLUMBING

PART 1 - GENERAL

1.01 SUMMARY

A. Section Includes: Labor, materials, tools, and equipment to install plumbing systems as indicated.

B. Related Sections:

1. Division 01 - General Requirements.

2. Section 07 9200: Joint Sealants.

3. Section 10 4413: Fire Extinguishers and Cabinets.

4. Section 11 4013: Food Service Equipment.

6. Section 22 0500: Common Work Results for Plumbing.

7. Section 22 0513: Basic Plumbing Materials and Methods.

9. Section 22 0553: Identification for Plumbing piping and Equipment.

10. Section 22 0700: Plumbing Insulation.

11. Section 23 8000: Heating, Ventilating and Air Conditioning Equipment.

12. Section 31 2323: Excavation, Backfill for Utilities.

13. Section 33 3000: Site Sanitary Sewer Utilities

1.02 SUBMITTALS

A. Provide in accordance with Division 01 and Section 22 0500: Common Work Results for Plumbing.

B. Provide necessary documentation to Owner for processing rebates for water efficient fixtures.

1.03 QUALITY ASSURANCE

A. Unless otherwise noted, the California Plumbing Code is hereby made part of this section.

B. Conform to provisions of Section 22 0500: Common Work Results for Plumbing.

C. Manufacturer of plumbing products must have ANSI/NSF Standard 61, Section 9 certification to demonstrate compliance with the federal requirements for lead contribution to drinking water, Safe Drinking Water Act SDWA and AB 1953.

1.04 PRODUCT HANDLING

A. Conform to provisions of Section 22 0513: Basic Plumbing Materials and Methods.

PART 2 - PRODUCTS

2.01 PIPING SYSTEMS

A. Materials: Refer to Section 22 0513: Basic Mechanical Materials and Methods.

B. Insulation for Piping: Refer to Section 23 0700: Plumbing Insulation.

2.02 FIXTURES AND DRAINS

A. General: Fixtures specified shall be furnished complete with trim and fittings. Cast iron plumbing fixtures shall be acid resistant enamel, and identified by casting letters "AR" or words "acid-resistant" into metal. Fixtures shall be white unless otherwise specified. Cast iron fixtures shall be white enamel inside and on back, rim and apron, with exposed unfinished surfaces painted white. Fixtures of same general classifications shall be of same make.

B. Finished Brass:

1. Unless otherwise specified, finished brass of a similar type shall be of same manufacturer and model throughout buildings.

2. Finished and exposed brass equipment, except floor, shower and urinal drains shall be chromium-plated and polished. Floor, shower and urinal drains, unless otherwise specified, shall be nickel-bronze metal.

C. Traps, Trap Arms and Tailpieces:

1. Fixture traps shall be all cast brass, chromium-plated and polished. **(No tubular traps).** Exceptions as follows:

a. Traps that are an integral part of a fixture.

b. Traps concealed in floors, walls and furring.

c. Traps standard for service sinks and Industrial Shop equipment.

d. Laboratory traps and tailpieces shall be as specified in section 22-0700.

“Basic Plumbing Materials and Methods”

2. Concealed traps and 17 gage tailpieces may be rough brass finish, except as otherwise specified. Laboratory traps and tailpieces shall be as specified in

Section 22 0700: Basic Plumbing Materials and Methods. Furnish chromium-plated and polished cast brass wall flanges with setscrews and chromium-plated and polished brass casing on discharge side of each trap.

3. Tailpieces shall be not lighter than 17 gage, brass, chromium-plated, and polished. Furnish and install chromium brass plated wall flanges with set screws and chromium-plated 20 gage brass casing on discharge side of each chrome-plated all cast trap.

D. Faucet and Shower Valve Handles: Faucet and shower valve handles shall be solid brass, chromium-plated and polished, and fastened to their stems by Allen type hollow head stainless steel set screws through the side of the handle extending into the stem. Handles with sharp edges or projections shall not be furnished.

E. Fixture Supplies:

1. Supplies for water heaters shall be unplated rigid copper water tube with threaded adaptors for connections to valves and other threaded connections. All other supplies shall be chromium-plated brass with hospital threads or shall be furnished with fittings and valves, which completely cover threads.

2. Exposed supplies for showers shall be chromium-plated brass pipe up to header with hospital threads or shall be furnished with fittings and valves, which completely cover threads.

3. Supplies to water closet tanks, lavatories, and drinking fountains shall be furnished with chromium-plated and polished screwed type angle compression stops with square shank stems and lock shields extending beyond stem. Instead of solid supply piping, polished chrome-plated risers of 3/8 inch outside diameter with ferrule stop end and metal nosepiece may be furnished. The installation of braided stainless or easy hooker's supplies is not permitted. Exception: Supplies that rise vertically from floor shall be furnished with straight type instead of angle type stops.

4. Each supply or pipe that penetrates a finished surface and plumbing pipes passing through a countertop or part of a cabinet shall be furnished with a chromium-plated brass flange except flanges furnished by manufacturer of flush valves as an assembly.

5. Water supplies of plumbing fixtures shall be protected against back-siphonage in event of a vacuum in piping system.

6. Discharge outlets of supply faucets for lavatories and sinks shall clear top of overflow rim by at least one inch.

7. Toilet and urinal flush valves shall be furnished with recognized atmospheric vacuum breakers, installed a minimum of 6 inches above fixture.

2.03 ACCESS PLATES (To cleanouts, valves, water hammer arrestors and hose faucets)

A. Schedule Numbers:

AP-1: Square, unless otherwise noted, steel, prime coated; frame, 18 gage minimum. Door shall be 16 gage minimum with concealed hinge or be removable, with vandal-proof lock operated by Allen wrench. Provide for painted and stucco walls.

SMITH	ZURN	ELMDOR	MILKOR	WATTS	MIFAB	JOSAM
Fig 4760 AK	Z-1462-VP	DW-AKL	MOR DW AK1	CO-300-S-6	UA-A	58650-VP OR EQUAL

AP-2: Round type, stainless steel, vandal-proof, 5/16 inch No. 18 or 1/4 inch No. 20 flat-head machine screw into cleanout plug. Plate shall be prime coated minimum 18 gage steel or polished chrome-plated brass, 18-8 No. 302 stainless steel, or polished nickel bronze. Provide for painted walls, screwed into cleanout plug.

SMITH	ZURN	JOSAM	WADE	WATTS	MIFAB	OR EQUAL
4710U	Z-1469-VP	58600	8480R	CO-480-RD-6	C1400-RD-6	

AP-3: Square, polished face chrome-plated bronze, aluminum alloy or brass chrome-plated brass frame with 14 gage polished 18-8 No. 302 stainless steel or brass chrome-plated secured cover with vandal-proof screws. Provide for tile walls.

SMITH	ZURN	WADE	WATTS	MIFAB	JOSAM	OR EQUAL
4735U	Z-1460-VP	58630	CO-300-S-6	C1400-S-3-6	58640-VP	

AP-4: Square, floor type, cast nickel-bronze aluminum alloy or brass, with carborundum or scoriated, secured top. Provide for floor access to solid interceptor in Science Room, Ceramic Room, and Agriculture Room.

SMITH	ZURN	JOSAM	WATTS	MIFAB	OR EQUAL
4910U	Z-1461-VP	58630	CO-300-S-6	C1300-S-6	

2.04 BACKFLOW PREVENTION ASSEMBLIES

A. Schedule Numbers: See fixture schedules on plans.

2.05 BACKWATER SEWER VALVE ASSEMBLY

A. Schedule Numbers: Not used.

2.06 CLEANOUT ASSEMBLIES

A. Cleanout plug shall be line size.

B. Schedule Numbers:

CO-1: Iron body cleanout tee full line size up to 4 inches and round access plate, plugs shall be brass, countersunk with tapped boss for 5/16 inch No. 18 or ¼ inch No. 20 screws. Provide for finished walls at base of waste stack, above urinal and service sink. AB&I and TYLER may be used as iron body cleanouts. Trim and accessories shall be Smith or Zurn or equal.

SMITH	ZURN	WATTS	MIFAB	JOSAM	OR EQUAL
4532-U	Z-1446-BP	CO-460-RD-34B	C1460-RD-6	58600-CO	

CO-2: Iron body with approved UPC plug, top and adjustable sleeve, cut-off ferrule, polished scoriated brass nickel bronze secured cover. AB&I and TYLER may be used as iron body cleanouts. Trim and accessories shall be Smith or Zurn or equal Provide for finished floors inside buildings, in covered areas, and in concrete paving.

Square:

SMITH	ZURN	WATTS	MIFAB	JOSAM	OR EQUAL
4053L-U-NB	ZN-1400-T	CO-200-S	C1220-S-1-6l	55000-1-SQ	

Round:

SMITH	ZURN	WATTS	MIFAB	JOSAM	OR EQUAL
4033-L-U-NB	ZN-1400	CO-200-R	C1220-1-6	55000-1	

CO-3: Secured cover, extra heavy-duty, adjustable sleeve, cut-off ferule, UPC. Brass approved type plug, scoriated tractor type cover. Provide for areas outside building on concrete paving.)

SMITH	ZURN	WATTS	MIFAB	JOSAM	OR EQUAL
4233-U	ZN-1400-HD	CO-200-RX-4	C1220-4-6	55000-22	

CO-4: Tapped soil tee with brass plug, full line size. Provide for above grade, outside building at base of exposed downspout.

SMITH	ZURN	WATTS	MIFAB	JOSAM	OR EQUAL
4512	Z-1445-BP	CO-460-34A	C1460	58910	

CO-5: Raised threaded head brass plug. Provide for yard box YB-3.

ZURN	WAATS	SMITH	JOSAM	OR EQUAL
Z-1470-A	CO-590	4285	58540-20	

2.07 CIRCULATING PUMPS, HOT WATER HEATING SYSTEM

A. Schedule Numbers: See equipment schedules on plans.

2.08 DRINKING FOUNTAINS

A. Drinking Fountains shall be provided with brass free waterways and lead mitigating water filtering systems (DFWF).

C. Schedule Numbers: See fixture schedules on plans.

2.09 DRUM TRAPS

A. Schedule Numbers:

DT-1: Extra heavy cast iron, bolted top.

SMITH	ZURN	WATTS	MIFAB	JOSAM	OR EQUAL
8714	ZA1180	SI-742-X	MI-SOLID-S	61030	

DT-2: Aluminum solid interceptor, furnish for on-floor installation.

SMITH	ZURN	WATTS	MIFAB	JOSAM	OR EQUAL
8710-AA	Z-1180	SI-742	MI-SOLID-S-AL	61030-26	

2.10 DIELECTRIC UNIONS

A. Schedule Numbers: Not used.

2.11 EMERGENCY EYE WASH / EMERGENCY SHOWER

Emergency eye wash/emergency shower equipment must meet OSHA safety order requirements.

A. Schedule Numbers: Not used.

2.12 ELECTRIC WATER COOLERS

A. Water Coolers shall be provided with brass free waterways and lead mitigating water filtering systems (DFWF).

B. Schedule Numbers: Not used.

2.13 FAUCETS

A. Access compliant faucets: Force to activate controls shall be no greater than 5 pounds. Self closing metering, where specified, to remain open 10 seconds minimum when activated.

B. Schedule Numbers: See fixture Schedules on plans.

2.14 FLOOR DRAINS

A. Schedule Numbers: See fixture schedules on plans.

2.15 FLEXIBLE HOSES

A. Schedule Numbers:

FLH-1: Braided stainless steel metal hose (for gas use). US Flex, Metraflex, Nelson Dunn or equal.

FLH-2: Braided bronze metal hose (for non pressure condensate connection use). US Flex, Metraflex, Nelson Dunn or equal.

2.16 FLUSH VALVE ASSEMBLY

A. Schedule Numbers: See fixture schedules on plans.

Valves shall be furnished so that flush will remain constant and not require any adjustment.

1. Each flush valve shall be provided with a loose key, square shank, lock shield angle service stop connected to flush valve with a union connection.

2. Provide l7 gage pressed brass escutcheons for wall and fixture. Escutcheons shall be fastened to not turn or rattle.

3. Each flush valve shall be furnished with a vacuum breaker providing one inch opening to atmosphere, which will not leak under any degree of back pressure and will not restrict rate of flow more than 10% at 10 pounds pressure and will operate noiselessly.

4. Tailpiece shall be not lighter than 17 gage, and shall be part of flush valve assembly.

5. Exposed metal parts of flush valve assembly shall be nickel or chromium-plated on a brass or copper base.

2.17 FLOOR SINKS

A. Schedule Numbers: See fixture schedules on plans.

2.18 HOSE BIBBS

A. Schedule Numbers: See fixture Schedules on plans.

2.19 LAVATORIES

A. Access compliant faucets for Lavatories: Force to activate controls shall be no greater than 5 pounds. Self closing metering, when specified, to remain open 10 seconds minimum when activated.

B. Cast Iron Lavatories shall be acid resistant enamel, and shall conform to Commercial Standards CS 77.63. Unites furnished in conjunction with strainer installation or faucet installation shall be brass. Exposed brass nuts shall be chrome plated.

C. Exposed trim shall be free from sharp edges or points. Fixture shall be furnished with other listed manufacturer specified trim. Instead of solid supply pipe, polished chrome-plated risers, 3/8 inch outside diameter with ferrule stop end and metal nosepiece may be furnished.

D. Insulate cold water, hot water and drain lines under all access compliant lavatories with approved type insulation.

PLUMBEREX	LAV-GUARD	OR EQUAL

Schedule Numbers: See fixture schedules on plans.

2.21 LAUNDRY TRAYS AND TRIM

A. Sinks specification herein shall be furnished with strainer and tailpieces unless otherwise noted. Supplies shall be 3/8-inches outside diameter.

B. Schedule Numbers: See fixture Schedules on plans.

2.22 PIPE HANGERS

A. Refer to Section 22 0513: Basic Plumbing Materials and Methods.

B. Schedule Numbers:

1. PH-1: Complete with clamps, inserts, etcetera.

SUPERSTRUT	UNISTRUT	TOLCO	B-LINE	OR EQUAL

2.23 P-TRAPS

A. Schedule Numbers:

PT-1: Cast brass complete, chrome-plated.

ZURN	AB&A	KOHLER	OR EQUAL
Z-8712-LC	107	K-9018	

2.24 PRESSURE REGULATING VALVE ASSEMBLIES

A. Schedule Numbers: See fixture schedules on plans.

2.25 ROOF DRAINS

A. Schedule Numbers: Not used.

2.26 SERVICE SINKS and TRIM

A. Schedule Numbers: See fixture schedules on plans.

2.27 SINKS and TRIM

For offices and dining room sinks.

A. Access compliant faucets for sinks: Force to activate controls shall be no greater than 5 pounds. where specified self closing metering to remain open 10 seconds minimum when activated.

B. Cast iron sinks shall be acid resistant enamel, and shall conform to Commercial Standards CS 77.63. Units furnished in conjunction with strainer installation or faucet installation shall be brass. Exposed brass nuts shall be chrome-plated. Refer to the Fixture Supplies paragraph of this section.

C. Exposed trim shall be free from sharp edges or points. Fixture shall be furnished with other listed manufacturer specified trim. Instead of solid supply pipe, polished chrome-plated risers, 3/8-inches outside diameter with ferrule stop end and metal nosepiece may be furnished.

D. For access compliant sinks: Insulate cold water, hot water and drain pipes under sinks with district approved type insulation.

PLUMEREX	LAV GUARD	OR EQUAL

E. Schedule Numbers: See fixture Schedules on plans.

2.28 SERVICE STOP GAS VALVES

A. Schedule Numbers: See fixture Schedules on plans.

2.29 STOP VALVES

A. Stops shall be loose key type, ½-inches IPS inlet and outlet chrome-plated brass casting, except as noted.

B. Schedule Numbers:

STV-1: Angle:

CHICAGO,	CRANE	NIBCO	OR EQUAL
442-LKABCP	8.5113.	77	

STV-2: Partition:

CHICAGO	T& S BRASS	OR EQUAL
1771-ABCP	B-1028	

STV-3: Straight Type, with Loose Key:

CHICAGO	CRANE	T&S BRASS	OR EQUAL
45-LKABCP (1/2 inch)	8-5111	B-O418	

2.30 THERMOSTATIC MIXING VALVE ASSEMBLIES (TMVA)

A. General: Valve bodies shall be cast brass or bronze valve assembly provided with holding bracket and shall be installed on wall bracket. Valve shall be rough brass or bronze satin sprayed finish unless otherwise noted. Assembly shall include a 3 5/8-inch diameter dial thermometer, color-coded with white face and black letters. The temperature range between 100 degrees F. and l50 degrees F. shall be background in red or red line enclosed. Valve complete with fail safe feature, square shank loose key stops, checks and strainers on both hot and cold water inlets and shutoff valve on outlet. Valves shall be sized on a 45 psig (maximum) pressure drop

B. Manufacturers: See equipment schedules on plans.

2.31 TRAP PRIMERS

A. Schedule Numbers: See fixture schedules on plans.

2.32 URINALS

A. Schedule Numbers: See fixture schedules on plans.

2.33 WATER CLOSETS

A. General: Water closets shall be vitreous china with Polyvinyl chloride bolt caps. Fixtures with auto-flush valves shall be provided with manual override button.

B. Schedule Numbers: See fixture schedules on plans.

2.34 WATER TEMPERATURE CONTROLLERS

A. Schedule Numbers:

WTC-1: Remote bulb type, plain steel case, baked enamel finish, glass fronted cover, mercury to mercury switch. 80 degrees F. to 240 degrees F. range of not more than 10 degrees F. differential.

MERCOID	HONEYWELL	JOHNSON CONTROLS	OR EQUAL
DA-4-35	T675A1540	A19 SERIES	

WTC-2: Immersion type, black hard steel case, separate well type, outside adjustment, temperature range 40 degrees to 180 degrees F. range of not more than 10 degrees F. differential.

HONEYWELL	PENN	JOHNSON CONTROLS	OR EQUAL
T-6031D 1007	A19ABC-11	A19 SERIES	

2.35 WATER HEATERS / Domestic / Boilers

A. Gas fired water heaters shall meet the Flammable Vapors Ignition Resistance requirements (FVIR).

B. Gas and electric water heaters must meet NAECA energy efficiency requirements. Exceptions: Table top and point of use models (electric) less than 20 gallons. In capacity and gas models over 75,000 BTUH.

C. Water heaters from 75,000 BTU/hr to Boilers 2,000,000 BTU/hr shall comply with rule 1146.2 “Emission of Nitrogen from large water heaters and small boilers”. Natural gas fired water heaters with heat input rates less than 75,000 Btu/hr shall comply with rule 1121.

D. Instantaneous/Tank-less water heaters of any kind are prohibited. A minimum 6 gallon water heater is to be used.

E. Schedule Numbers: See equipment schedules on plans.

2.36 WATER HAMMER ARRESTORS

WHA- See fixture schedules on plans.

2.37 YARD BOXES

A. Schedule Numbers:

YB-1 Yard Boxes: 14 ¾-inch by 20-inch by 12-inch, cast concrete, with cast iron traffic cover marked "GAS"

Provide for use over gas stops.

BROOKS 36-H MB with No. 36-T Cast	EISEL 363.5	OR EQUAL

iron Cover		

YB-2: Same as YB-1, marked "WATER" Provide for use over water valves.

BROOKS 36- H MB with No. 36-T Cast iron Cover	EISEL 363.5	OR EQUAL

YB-3: Same as YB-1, marked "SEWER"

BROOKS 36- H MB with No. 36-T Cast iron Cover	EISEL 363.5	OR EQUAL

2.38 FIXTURE CONNECTIONS

A. Branches to individual fixtures shall be of the following sizes unless larger sizes are indicated on Drawings:

Fixture	Copper, Cold	Copper, Hot	Trap and Connections	Soil/ Waste	Vent
WC Flush Valve	1 inch	-----	4-inch	4-inch	2-inch
Lavatories	½ inch	½ inch	1 ½-inch by 1 ¼-inch	2-inch	1 ½-inch
Sinks:					
Service	½ inch	½ inch	2-inch	2-inch	1 ½-inch
Kitchen	½ inch	½ inch	1 ½-inch by 1 ½ inch	2-inch	1 ½-inch
Wash	¾ inch	½ inch	1 ½-inch by 1 ½ -inch	2-inch	1 ½-inch
Drinking Fountains:					
Multiple	3/8 inch	-----	1 ½-inch by 1 ½-inch	2-inch	1 ½-inch
Single	3/8 inch	-----	1 ½-inch	2-inch	1 ½-inch

Fixture	Water Supply	Soil/ Horizontal	Vent
Urinals, Wall-Hung Flush Valve			
Standard	¾ inch	2-inch	1 ½-inch
Access Compliant Use	1 inch	2-inch	1 ½-inch
Sill cocks	¾ inch minimum	-----	-----

B. Water headers serving water closets shall be copper water tube, with following size throughout length:

1. 1-1/2 inches for 2 flush valves.

2. 2 inches for 3 to 9 flush valves.

C. Water headers serving urinals shall be of following size throughout length:

1. 1” for 1 or 2 flush valves.

2. 1-1/4” for 3 flush valves.

3. 1-1/2” for 4 to 8 flush valves.

D. Water headers serving showers shall be same as listed above for urinals.

E. Water headers serving lavatories shall be of following size throughout length:

1. 1/2 inch for 2 lavatories.

2. 3/4 inch for 3 and 4 lavatories.

3. One inch for 5 and 6 lavatories.

2.39 HEIGHT OF FIXTURES

A. Heights for standard fixtures.

Fixture	Adult and High School	Middle	Elem.	Kindergarten and Younger
Water Closets	15-inch	15-inch	15-inch	10-inch
Lavatories	32-inch	32-inch	30-inch	25-inch
Drinking Fountains	42-inch	40-inch	32-inch	30-inch
Wash Sinks	30-inch	30-inch	28-inch	24-inch
Urinals, lip height	24-inch	21-inch	18-inch	N/A

B. Heights for access compliant fixtures.

Fixture	Adult	Elementary	Kindergarten and Younger
Toilets, center line from wall	18-inch	15-inch	12-inch
Toilets, height to top of seat	17 to 19 inches	15-inch	10-inch-12-inch
Lavatories, sink top height	34-inch maximum	29-inch maximum	24-inch maximum
Lavatories, sink knee clearance	27-inch minimum	24-inch minimum	19-inch minimum
Urinals, lip height	17-inch maximum	15-inch maximum	N/A
Urinals, flush handle height	N/A	N/A	N/A
Drinking fountains, bubbler height.	36-inch maximum	32-inch maximum	30-inch maximum
Drinking fountains, knee clearance	27-inch minimum	24-inch minimum	22-inch minimum
Wash Sink	Per Drawings		

PART 3 - EXECUTION

3.01 EXAMINATION

A. Examine areas and conditions under which Work of this section will be performed. Correct conditions detrimental to proper and timely completion of Work. Do not proceed until unsatisfactory conditions have been corrected.

3.02 INSTALLATION

A. General:

1. Unless otherwise specified, plumbing fixtures, equipment and appliances that require connections to plumbing line shall be connected. This shall include fixtures specified or indicated as furnished by others, furnished by Owner, or specified in other related sections. Install supplies, stops, valves, traps, wall flanges, or pipe casing for connection of this equipment.

2. Install equipment as indicated on reviewed and accepted Shop Drawings.

3. Avoid interference with Work of other trades. Do not deviate from Drawings without review of the Architect.

B. Examination: Check each piece of equipment in system for defects verifying that parts are properly furnished and installed.

C. For piping Work, refer to Section 22 0513: Basic Plumbing Materials and Methods.

D. Plumbing Fixture and Equipment Installation:

1. Unless otherwise indicated, fixtures shall be installed with 5/16 inch brass bolts or screws of sufficient length to securely fasten fixture to backing, wall, or closet ring.

2. Fixtures installed against concrete or masonry walls shall have their hangers fastened with 5/16 inch brass bolts, Philip Shield type anchors, or 2 unit cinch anchors. Wood or plastic plugs are not permitted.

3. Fixtures installed against wood or metal stud walls shall have their hangers fastened to metal backing plates with 5/16 inch brass bolts screwed into plate. Fixture hangers for urinals shall be fastened centered vertically on metal backing plate with three 5/16 brass bolts each for small individual hangers and six, for larger one piece hangers. Lavatories shall be hung with not less than four 5/16 inch brass bolts or not less than five 1/4 inch brass bolts. Each sink hanger shall be hung with not less than four 5/16 inch brass bolt or not less than five 1/4 inch brass bolts.

4. Pan type drinking fountains shall be hung with 5/16 inch cadmium plated bolts with a bolt in each bolt opening in hanger. Hangers for pan type drinking fountains shall provide 2 inches (plus or minus 1/4 inch) between pan and wall. Spaces due to irregularities between fixtures and tile walls shall be neatly filled with white cement or silicone filler.

5. Backing for hanging of plumbing fixtures and equipment shall be installed in supporting wall at time rough piping is installed. Backing for stud walls shall be

steel plate 1/4 inch thick, not less than 4 inches wide. Backing for urinals shall be ¼-inches thick by 6-inch wide steel plate. Steel plate shall be attached to stud at each end of plate and to each stud it crosses. Plate shall be attached to metal studs by bolting with two ¼ inch U-bolts per stud with bolts through plate and around stud flange or by welding with a 1/8 inch fillet weld full width of stud flange, top and bottom of plate. At wood studs, plate shall be carefully recessed flush with face of stud and attached to each stud with 2 No. 14 flat-head wood screws, 2 inches in length into pre-drilled 1/8 inch holes. Backing for stud walls supporting wall-hung closets shall be as detailed.

6. Rough-in for fixtures, equipment and appliances shall be as indicated on Drawings and as specified, including those items indicated as furnished by others, furnished by Owner, or future capacity. When connections to equipment from capped or plugged lines are required, caps or plugs shall be removed at time equipment is set and stops or valves installed and connections provided as specified.

7. Piping materials for trap arms shall be Brass, Cast Iron or DWV copper

8. Piping shall be stubbed out to exact location of fixtures and stubs shall be installed symmetrical with fixtures. Hot and cold water supplies for center set faucets on lavatories shall be installed on 8-inch centers, unless otherwise specified or required.

9. Kitchen equipment requiring backflow protection with hot and cold water connections shall be installed with approved backflow prevention assemblies; BPV-3 and drain into floor sink with air gap.

E. Cleanouts in Drain, Waste, Vent and Sewer Lines:

1. Cleanouts shall be installed at locations stated in the California Plumbing Code and accessible at following locations:

   a. At locations above first floor as stated on construction documents and 5 feet outside of the building.

   b Install an accessible main line upper terminal cleanout in all restrooms above water closet over flow. (Install above upper terminal water closet where there are more than one water closet in a restroom).

   c. Above faucets of each sink with brass plug.

   d Above service sink with brass plug.

   e. At each Drinking Fountain with brass plug.

   f. At each urinal and locate above urinal with brass plug.

   g. Above overflow level of pot sinks with brass plug.

h. In vertical line at base of each downspout connected to an underground storm drain system extend cleanout to exterior of building.

i. At upper end of a horizontal vent line when any part of horizontal line is below overflow level of fixture it serves.

j. Not to exceed 100-foot intervals in sewer and waste lines exterior of building.

k. At property line connection.

l. Where indicated on Drawings.

2. Cleanouts shall be extended to grade as follows:

a. Not to exceed 100-foot intervals in straight runs of pipe outside buildings.

b. At horizontal changes of direction in aggregate greater than 135 degrees (underground).

c. At property lines.

d. Where cleanouts occur under concrete.

e. Where marked for future connections.

3. Cleanouts in building shall be extended to floor level or above floor level or above floor level in walls or furring when cleanouts are not accessible or where clearance is less than 18 inches.

4. Cleanouts in finished areas in building shall be concealed except that cleanouts above service sinks in janitor's rooms or closet, and cleanouts above service sinks or in exposed piping in boiler or heater equipment rooms, may be exposed. Cleanouts for urinals shall be installed above urinal and shall terminate behind an access plate.

5. Cleanouts in floors of covered areas and those extended to grade in concrete areas shall be floor level type with extensions body brass plugs and detachable nickel-bronze or aluminum alloy scoriated.

6. Concealed cleanouts in vertical lines shall be service weight soil cleanout tees with brass plugs and round cover plates unless otherwise specified or indicated. A snug fitting sleeve of galvanized sheet metal shall be placed around hub of tee and shall extend to flush with finished soil, or cleanout shall be extended to finished wall.

7. Cleanouts extended from below floor to a wall or furring or on horizontal lines above floor that terminate at a wall or furring shall be iron body type with brass plugs and round cover plates.

8. Cover plates over cleanouts in painted walls shall be steel, bonderized and prime coated. Cover plates cover cleanouts in tile walls shall be chromium-plated brass or nickel bronze. Plates shall be attached to cleanout plugs with 5/16 inch No. 18 or 1/4 inch No. 20 stainless steel vandal-proof type screws. Plates shall be one inch larger in diameter than fitting opening.

9. Cleanouts at bases of downspouts shall be tapped soil tees with brass plugs as hereinafter specified, full size of line.

10. Cleanouts extended to grade in exterior sewer lines other than floors or concrete areas shall be a cleanout assembly with secured top, extra heavy-duty, adjustable sleeve, cut-off ferrule, countersunk threaded brass plug and scoriated tractor type cover.

11. Other cleanouts shall be iron body type.

12. Cleanout extensions shall be no-hub cast iron soil pipe. Exterior cleanouts, those in concrete excepted, shall terminate in a 14-inch by 6-inch thick concrete block with cleanout assembly and top of block flush with finish grade.

13. Fittings in lines utilized as cleanouts shall be approved soil fittings including no-hub pipe. Tees and crosses in vent headers excepted.

14. Pipe joint compound shall not be installed on cleanout plug. After lines are tested and approved, each cleanout plug shall be removed, greased, and replaced.

3.03 EXCAVATION, TRENCHING AND BACKFILLING

A. Perform trenching, excavation, and backfilling required for Work of this section as specified herein and in Section 31 2323: Excavating, Backfilling, and Compacting for Utilities.

3.04 SERVICE CONNECTIONS

A. Determine exact location of required water, drain, and sewer connections and provide proper connections.

B. Potable water lines shall be purged completely before connecting to sources of water for the Project. Determine quality of water supply before connection.

3.05 WATER HAMMER ARRESTORS

A. Install water hammer arrestors indicated on Drawings and in following locations (only non-ferrous arrestors may be installed in copper water system):

1. Water lines to lavatory headers, water closet and urinal headers, service sinks, kitchen sinks, wash fountains, drinking fountains, laboratories with medical type faucets and on wash sinks having three or more stations and all other quick closing fixture such as clothes washers, as close to fixture as possible.

2. Between last two fixtures when three or more fixtures, other than those listed in Number 1 above, are served by a common header.

B. When possible, arrestor shall be installed in wall or furring. When arrestor is installed in wall or furring, furnish an access plate large enough to permit removal of arrestor. Access plate shall be a minimum of 2 inches larger in each direction than the arrestor.

C. Fixture water lines shall be provided with mechanical water arrestor hammer dampening devices. Air chambers are not approved.

3.06 CONDENSATE DRAINS - FROM AIR CONDITIONING UNITS

A. Connect drain piping from drain pan of air conditioning unit to condensate disposal location indicated. When coil or unit housing is shock or vibration isolated, connection shall be furnished through a flexible connector not less than 10 inches long. Drain line shall pitch to flow out at not less than one inch in 8 feet. Drain line size shall be per UPC (3/4 inch up to 3 ton only). Drain line shall not be reduced smaller than unit outlet connection.

B. Condensate drain piping installed within building whether in air conditioned space or not shall be insulated. Refer to Section 22 0700: Plumbing Insulation, for type of material required.

C. Condensate Trap:

1. A condensate trap shall be installed for each air conditioning coil. Trap shall be assembled from 2 brass unions: one between A/C unit and inlet of trap, and one at outlet of trap that connects to main drain.

2. Trap configuration shall be per manufacturer's recommendations based on total unit casting static pressure (simulated plugged filter condition), but not less than 3 inch water seal.

3. Running trap design is not permitted.

4. Secondary drain shall not be trapped.

D. Condensate trap shall be checked at equipment operational tests for proper water drainage flow from air conditioning unit. Cooling condensate pan shall be filled with water, filters covered with plastic (plugged filter simulated), unit panels replaced, and unit motor running at design condition. Pan shall drain without hesitation to bottom of inlet connection. Tests are made prior to installation of ceiling.

E. Secondary Overflow Drain:

1. Drain pan installed underneath air conditioning units in concealed ceiling space or units that incorporate dam fitting shall be furnished with secondary drain piped to outside planter area with outflow location clearly visible.

2 If outside building location is not available or feasible, secondary drains shall be piped to a classroom sink, if sink is not available pipe to a room corner away from cabinets, computers, desks, door ways/entrances or stairs.

3 Secondary vertical pipe that penetrates through suspended ceiling shall be furnished with a coupling or threaded adapter so ceiling tile can be removed without damage.

3.07 CONDENSATE DRAINS - FROM WINDOW TYPE HEAT PUMP AND EXTERIOR WALL MOUNT HEAT PUMP UNITS

A. Whether indicated on Drawings or not, window units and wall mount units without built in bottom drain pan for evaporator and condenser coils shall be provided with galvanized steel condensate pan at bottom of unit with drain line that drains into drywell. Install copper 1/2 inch diameter pipe for window type air conditioners and 3/4 inch diameter pipe for exterior wall-mounted heat pump units.

3.08 MAKE-UP WATER SYSTEMS

A. Provide and connect make-up water systems for equipment in other sections.

3.09 GREASE TRAPS (INTERCEPTORS)

A. Grease traps shall be installed only when required by municipal authority. Grease traps shall be separately vented; fixtures connected to grease traps shall be trapped and vented. When grease traps are installed in concrete boxes, fill spaces between grease traps and concrete boxes with sand and place 2 inches of concrete seal over sand. Concrete seals shall pitch toward grease traps with inner edges flush with top of grease traps. Position openings for ease of cleanout.

3.10 GAS SERVICE

A. Above Grade Service: Pipe shall be steel, hammered, free of dirt and scale, and blown out with oil-free air or nitrogen to a clean, dry condition. Piping shall not be installed in or through a ventilation duct or plenum.

B. Underground Service, Gas approved (yellow) Polyethylene Plastic Pipe:
Refer to Section 22 0513: “Basic Plumbing Materials and Methods”.

1. Pipes shall be joined with polyethylene fitting and joined together by thermal fusion in accordance with procedures recommended by Polyethylene plastic pipe and fitting manufacturer.

2. Plastic pipe shall be installed not less than 30 inches below grade..

3. Underground Warning Tape shall be installed 12 inches above buried gas piping. Warning tape shall be yellow with caution statement as follows: “CAUTION – BURIED GAS LINE BELOW”.

4. Plastic pipe shall not be installed in or under a building or structure. Pipe shall be installed under bituminous surfacing or compacted soil area, free from large stones. Pipe may be installed under sidewalks or driveways, as long as no joint occurs. Pipe installed under paved covered areas wider than 40 feet shall be installed in ventilated conduits extending 2 feet past paving.

5. Pipe shall be installed on a 6 inches deep sand bed. After required pressure-leak test, pipe shall be covered with sand not less than 6 inches thick.

6. Piping shall not support weight of valves, metal fittings or other items. Pipe shall be installed strain free.

7. Plastic pipe fittings shall not be stored or left exposed to sunlight. Pipe in open trenches shall be shielded. A sand envelope of 6 inches minimum shall be placed around pipe, with exception of joints, until inspection by IOR is completed. Protection for pipe shall be provided when necessary to leave pipe exposed overnight.

8. Installer of piping is required to have training and to have attained a certification. Non-trained/Non-certified installer must contact the manufacturer or manufacturer's representative to provide on-site fusion training and certification, prior to work commencement

9. Polyethylene plastic pipe shall connect to a steel epoxy coated anodeless type riser to minimum of 6 inches above grade, when exiting the underground installation and transitioning to steel pipe connection.

10. Where a steel pipe riser passes into a structure or building, a double swing or double-offset joint shall be furnished. Pipe shall pass into structure 6-inches above grade and through a sleeve with a minimum one inch clearance. An isolation valve is required before pipe entering the building.

3.11 CLEANING - PLUMBING PIPING SYSTEMS AND FIXTURES

A. Plumbing lines and fixtures shall be flushed to remove dirt and foreign material until water runs clear and no foreign substance or odor is present. Strainers and screens on faucets shall be removed during this cleaning operation.

B. After satisfactory cleaning of strainer and screen replacements has been witnessed by the Project Inspector, post and maintain signs stating: "CAUTION - Water at this construction project has not yet been certified for human consumption." Signs shall be furnished with letters at least 1/2 inch in height, and shall be conspicuously posted at entrances to the Project site. Signs shall be paneled, black and yellow, in conformance with OSHA Section 1910.1455.

3.12 DISINFECTING DOMESTIC WATER PIPING SYSTEMS

A. Newly installed or replaced piping and/or fixtures dispensing potable water shall be disinfected and undergo an approved bacteriological analyses before water system is allowed for public use.

B. Work shall be performed by Technicians Certified by the American Water Works Association (AWWA) and/or the State of California Department Health Services, Grade II Water Treatment Operator Certification or higher issued by the Department of Health Services (DHS) for the State of California. Comply with Title 22, Code of Regulations Division 4, Chapter 13, and Article 2 Operator Certification Grades.

C. Method:

1. A Reduced Pressure Backflow assembly shall be in installed to protect from cross contamination of the local water purveyor's meter service supply when at any time there is any type of water connection with the piping to be disinfected (Chlorinated) and the water meter service supply.

2. System is to be flushed to remove any materials that may have entered the system.

3. Using a chemical feed metering pump and a chlorine tank, the chlorine solution is injected into the water system.

D. Disinfection and De-chlorination procedure (24 or 3 Hour Contact Time):

1. 24-hour Test Method:

a. Prior to disinfection, post signs on all water outlets of the system to be disinfected. Sign or tags shall read, "Water System Being Chlorinated- "Danger Do Not Drink Water" or similar warning.

b. Piping system shall then be adequately flushed with water to remove any particles and eliminate air pockets.

c. Using the continuous feed method, sodium hypochlorite conforming to ANSI/ AWWA B300 will be injected into the water system at a minimum of 50 PPM. A water flow meter provided by the water treatment technician will be used to determine the rate of injection and a chlorine test kit, Hach or equivalent, will be used to monitor the residual.

d. Chlorine residual test will be taken at all appropriate points and outlets to verify 50 PPM residual levels.

e. The chlorinated system shall be shut down for any use and the chlorinated water shall remain in the water system for retention of 24 hours.

f. After 24 hours, chlorine residual levels will again be tested at various points throughout the system to insure a minimum of 25 PPM residual. If the system has not met the minimum of a 25 PPM residual, the above disinfection process shall be repeated.

g. After satisfactory completion of the residual testing, flush out system until Hach or equivalent test reveal the water outlets have a free chlorine residual concentration less than 0.5 PPM. The procedure shall be in accordance with the AWWA standard C651-05.

h. The OAR may allow temporary use of the water system for construction purposes pending results of the bacteriological test analysis. Sign or Tags shall be left on all outlets stating water system is not safe for consumption until laboratory results are complete and meet these specifications.

2. 3 Hour Test Method:

a. If the water systems must be turned on for use as soon as possible, a 3 hours chlorine contact time to allow for disinfection is permitted with the OAR's approval.

b. Prior to disinfection, post signs on all water outlets of the system to be disinfected. Sign or tags shall read, "Water System Being Chlorinated- "Danger Do Not Drink Water" or similar warning.

c. Piping system shall be then adequately flushed with water to remove any particles and eliminate air pockets. Using the continuous feed method, sodium hypochlorite conforming to ANSI/ AWWA B300 will be injected into the water system at a minimum of 200 PPM. A water flow meter provided by the water treatment technician will be used to determine the rate of injection and a chlorine test kit, Hach or equivalent, will be used to monitor the residual.

d. Chlorine residual test will be taken at all appropriate points and outlets to verify 200 PPM levels. The chlorinated system shall be shut down for any use and the chlorinated water shall remain in the water system for retention of 3 hours.

e. After satisfactory completion of a 3 hour disinfection period, flush out system until Hach or equivalent test reveal the water outlets have a free chlorine residual concentration less than 0.5 PPM. The procedure shall be in accordance with the AWWA standard C651-05.

f. The OAR may allow temporary use of the water system for construction purposes pending results of the bacteriological test analysis. Sign or Tags shall be left on all outlets stating water system is not safe for consumption until laboratory results are complete and meet these specifications.

E. Bacteriological Test:

1. After final flushing and satisfactory results from the residual free chlorine concentration test, Bacteriological test samples shall be collected. The intent of the following is to provide insurance for an accurate representation to a complete Bacteriological test of the water system. At least two samples shall be taken from each floor of each building.

2. Bacteriological test samples shall be delivered to a State of California Department of Health Services Certified Laboratory to perform qualitative and quantitative bacterial analyses on the water samples for the presence of any Total Coliform bacteria and Plate Count. This count must be less than 500 cfu/mL.

3. The procedure shall be repeated if it shown by bacteriological examination made by an approved agency that the level of Disinfection does not meet these specifications.

4. After satisfactory results for the bacteriological test are provided to the OAR, warning sign or tags shall be removed.

3.13 VALVES ON PLUMBING SYSTEM

A. Furnish and install gates, ball, globes, angles, and check valves on plumbing Work at following locations whether indicated on drawings or not.

B. Hot and cold valves shall be:

1. Lead free complying with AB1953.

2. Above the ground copper water system, 2-inch and larger, may utilize Victaulic butterfly valves and fittings for their connections. A 2-inch or larger Victaulic valve may be in a wall if an adequately sized access panel is provided for maintenance or removal.

C. Valves shall be accessible and installed within an access panel approximately 3 feet above floor and no more than 7 feet above floor, or in a marked yard box to prevent tampering.

1. Immediately after each water meter, in addition to any valve furnished by utility company, there shall be an accessible valve on the inlet side for a strainer assembly, dual backflow device assembly and/or possibly a dual pressure reducing valve assembly.

2. A gate or ball valve on each water supply before it enters building. Valves shall be accessible from outside building and shall be installed in a marked yard box, unless otherwise indicated on drawings. Ball valves 2 ½-inch size or larger shall omit gate valve handle and furnish 2-inch square operating nut.

3. At multi story buildings, provide an isolation-valve or multiple valves for both hot and cold water in access panel to isolate and control each floor level.

4. For classrooms, shops, offices and boiler or mechanical room, install a gate or ball valve to control hot and cold water lines to each group of fixtures, a group of fixtures shall be considered to be 2 or more fixtures in the same room. When practical, valves shall be installed on the same wall as group of fixtures. Valves shall control only fixtures in rooms in which they are installed.

5. For restrooms, a gate or ball valve shall be installed in each restroom to isolate the hot and cold water supply into a restroom regardless of the number of fixtures. These valves shall control and be accessible only from within the restroom in which fixtures are installed. Valves shall be installed on the same wall as the group of fixtures it serves. Valves shall control only fixtures in restroom in which they are installed. Back to back restrooms shall be isolated separately and individually.

6. Install a gate or ball valve on each building branch line, which serves two or more fixtures, when these fixtures are not provided with a group isolation valve as specified above. These valves shall be located approximately 3 feet but not more than 7 feet above finish floor.

7. Install a gate, ball valve or partition stop for a drinking fountain or a group of drinking fountains.

8. Install a gate, ball valve or partition stop for hot and cold water supply to plumbing fixtures with no accessible supply stops, such as wall mounted faucets.

9. Install a gate, ball valve or partition stop for stops adjacent to, and controlling water flow to each sill cock and hose bib except as follows:

   a. A sill cock immediately below an exterior drinking fountain may be controlled by the same gate, ball valve or partition stop as drinking fountain.

   b. Valves or stops will not be required for individual hose bibs when these hose bibs are on a branch line serving only hose bibs and branch line is furnished with a shut-off valve.

10. Install a lose key angle stop, on each exposed fixture supply, and for each flush valve unless otherwise specified,

11. Install gate or ball valve at each location where a water line is connected to a piece of equipment other than items mentioned above.

12. Install a check valve on each hot water return line where it connects to a hot water storage tank or a water heater.

13. Handles, hand wheels (including dishwasher fill valve handles) and operating nuts shall be furnished of steel, brass, or cast iron and shall be removable. Unless specified to be loose key type, handles shall be securely fastened to their stems. On exposed outdoor valves, omit operating handles and provide operating nuts.

14. Provide a handle or a key for each five, or fraction thereof, loose key valves, bibs, or stops and deliver them to the project OAR.

3.14 VALVES - GAS SERVICE

A. A gas readily accessible shut-off stop shall be installed on each gas line entering a building immediately prior to the point it enters the building. Unless otherwise specified or indicated, shut-off valves for lines entering a permanent structure, buildings or portable buildings, shall be installed in a vertical riser above grade.

1. Gas shut off valve for portable buildings – A dedicated Gas shut off valve shall be provided in a marked Yard Box, for each portable building to facilitate relocation/removal of building without the need to shut off gas to entire school.

B. Gas Shut off valve within a building – A gas shut off valve with handles shall be accessible and serviceable within an access panel. Install valve minimum 3 feet above floor but less than 7 feet above floor.

C. In addition to locations specified, gas shut off valve shall be installed at following locations:

1. Install a lubricated plug gas shut off valve on any line connected to gas main or header at master assembly.

2. Install a lubricated plug gas shut off valve before entering any building or structure.

3. Install a gas valve on each outlet, in addition to any gas stop furnished with equipment.

4. Service to laboratory gas cocks shall be furnished with a special precision check valve, located downstream from gas stop servicing room outlet at each laboratory cock. Unless otherwise specified, 1/8-inches bore shall be provided for each outlet cock.

5. Install a gas shut-off valve on each gas line serving 2 or more gas outlets in same room. Service stop shall be installed not more than 7 feet above floor, and shall be in the room it serves.

6. Install a gas shut-off valve on inlet side of each gas pressure regulating valve.

7. Gas shut-off valves to be furnished with equipment.

8. Install gas shut-off valve at not more than 1,000 foot intervals on each gas main.

9. At multi-story buildings, provide gas-shut off valve(s) to isolate and control each floor or level. Install valves in a concealed manner in walls with access panels.

10. Gas shut-off valves in classrooms and locations subject to tampering shall be protected while remaining accessible.

D. When a gas-shut off valve adjacent to gas-fired equipment is indicated in Contract Documents it shall be furnished and installed as part of Work of this section.

E. When electrical wall switches with emergency push button are specified for controlling gas outlets at Laboratory Classrooms, provide main shut-off gas valve with normally closed electric solenoid valve within an accessible access panel.

3.15 ELECTROLYSIS PREVENTION

A. Brass nipples, 6 inches, with recognized brass unions; flanges shall be furnished and installed at locations described herein. Flanges shall be installed with complete insulating component consisting of gasket bolt sleeves and bolt washers. Dielectric insulators shall be installed at following locations:

1. Where special applications indicated on Drawings require an insulation flange or brass union, with 6-inch brass nipple to be installed in a condensate line, or steam line, flange insulation shall be of a high temperature type, suitable for continuous operation at temperatures up to 220 degrees F. for condensate and 400 degrees F. for steam.

2. Where steel or cast iron in ground connects to copper or brass piping above ground, transition from steel or cast iron pipe to copper or brass pipe shall be provided in an accessible location.

3. Underground dielectric connections shall be furnished in accessible yard boxes.

4. Above ground dielectric connections shall be exposed; or if in finished rooms shall be located in accessible access boxes.

3.16 UNDERGROUND PIPE MARKERS

A. Pipe markers shall be furnished according to Section 22 0553: “Plumbing Identification”

B. Under ground Caution Tape shall be placed 12 to 18 inches above the utility line. The Caution Tape shall be a designated color and marked with the appropriate name for the specific type of utility pipe as follows:

1. Yellow – with the words: CAUTION GAS LINE BELOW

2. Blue – with the words: CAUTION WATER LINE BELOW

3.17 HOT WATER CIRCULATING PUMPS

A. Floor-mounted pumps shall be provided with a 4-inch high concrete base with ½ inch reinforcing bars at 12-inch centers each way and doweled into concrete floor.

B. Piping shall be supported from building structure so as to prevent any strain on pump casing.

C. In-line pumps, unless otherwise specified, shall be centrifugal type with non-overloading characteristics and shall not overload motor above its horsepower rating under operating conditions with ratings based on continuous operation.

D. Centrifugal water pumps shall be rated according to Hydraulic Institute Test Code for Centrifugal Pumps. Pumps shall be furnished with bronze water chamber, bronze impeller and mechanical seal. Rotating parts shall be statically and dynamically balanced.

E. Flanged connections shall be provided on pumps with discharge connections larger than 2 inches. Smaller sizes may be threaded connections.

F. Hot water circulating pump shall be arranged so that pump can be automatically turned off when hot water system is not in operation.

3.18 WATER TEMPERATURE CONTROLLERS

A. Furnish and install a water temperature controller in hot water line adjacent to, and for control of, circulating pumps on hot water return lines when said pump is indicated on Drawings or herein specified. Bulb of temperature controller shall be installed so as to be directly in path of flowing water and so as not to obstruct flow of water.

B. Furnish and install a water temperature controller in hot water storage tanks for control of circulating pump on hot water circulating line when said pump is indicated on Drawings or specified herein.

3.19 COMPRESSED AIR SYSTEMS

A. Compressed air systems including compressors, air line filters, receivers, piping and appurtenances shall be installed as indicated and specified.

B. Component parts of compressor unit shall be installed on a base firmly attached to receiver; motor and compressor shall be properly aligned auxiliary equipment and controls specified, furnished with necessary controls, automatic moisture eliminator fittings, piping, conduits and wiring properly installed and connected in a professional manner. Lubricant shall be furnished to fill until ready for operation. Safety valves shall be installed to permit normal operation and properly protect equipment. Thermal units shall be installed in motor starter to trip at 125 percent of motor nameplate rating. Pressure switches shall be installed to cut in and cut out of settings indicated.

C. Compressor shall be installed on vibration dampers and flexible connections installed in piping to isolate vibration. Dampers shall be furnished with transmissibility of less than 10 percent for grade installation and less than 5 percent for above grade floor installation.

D. Furnished compressed air system shall comply with safety orders of Industrial Accident Commission of State of California, Building and Safety Department of City of Los Angeles, and electrical units shall be listed as UL approved. Piping between first downstream moisture eliminator and receiver shall pitch down to receiver and shall be not less than one pipe size larger than pipe leaving eliminator. Provide drip points at each building with piping pitching down to them. Drip leg at each drip point and moisture eliminator shall be not less than 6 inches long, capped 1 ½-inch pipe with drain petcock. Upon completion of compressed air piping installation and prior to testing of pipe and final connection to compressed air receivers, systems shall be blown out to a clean, dry condition.

3.20 DEPTH OF SEWER LINES

A. Minimum depth of below grade sewer lines shall be 24 inches to centerline of pipe. Sewer lines shall slope ¼ inch per foot minimum, unless otherwise indicated. Minimum depth at Owner property line shall be 6 feet, unless otherwise required.

3.21 BACKFLOW PREVENTION DEVICES

A. Backflow Devices: Installation of backflow devices shall be tested and certified by Los Angeles County backflow device tester before Substantial Completion. Tests shall be

performed in presence of Project Inspector. Test reports shall be turned over to Project Inspector for mailing to proper agency.

3.22 CLEANUP

A. Remove rubbish, debris, and waste materials and legally dispose off Project site.

3.23 PROTECTION

A. Protect Work of this section until Substantial Completion.

END OF SECTION

THIS PAGE INTENTIONALLY LEFT BLANK

DIVISION 23

HEATING, VENTILATING, AND AIR CONDITIONING

SECTION 23 05 00

COMMON WORK RESULTS FOR HVAC

PART 1 – GENERAL

1.01 SUMMARY

A. Section Includes:

1. This Section provides the basic mechanical requirements that apply to the Work of Division 23.

B. Related Requirements:

1. Division 01: General Requirements.

2. Division 26: Electrical.

1.02 REGULATORY REQUIREMENTS

A. Materials, fabrication, equipment, and installation shall comply with industry standards and code requirements. Where manufacturer's recommendations exceed industry standards, the manufacturer's recommendation shall establish the minimum standard. As a minimum, standards from the following organizations shall apply:

1. AMCA - Air Movement and Control Association.

2. ANSI - American National Standards Institute.

3. ASME - American Society of Mechanical Engineers.

a. ASME Boiler and Pressure Vessel Code.

b. ASME B31 - Code for Pressure Piping.

4. AHRI - Air-Conditioning, Heating, and Refrigeration Institute.

5. ASHRAE - American Society of Heating, Refrigerating and Air-Conditioning Engineers.

6. ASTM - American Society for Testing and Materials.

a. ASTM A53 - Specification for Welded and Seamless Pipe.

7. CSA - Canadian Standards Association.

8. FM Global - Factory Mutual Global

9. IAPMO - International Association of Plumbing and Mechanical Officials.

10. NFPA - National Fire Protection Association.

11. OSHA - Occupational Safety and Health Administration.

12. SMACNA - Sheet Metal and Air Conditioning Contractors' National Association.

13. UL - Underwriters Laboratories Inc.

14. Intertek (ETL Certification).

B. Materials, fabrication, equipment, and installation shall comply with federal, state, and local codes including, but not limited to, the following:

1. CBC, California Building Code, and CMC, California Mechanical Code.

   a. Latest edition as adopted by the City of Los Angeles, the County of Los Angeles, and the State of California including amendments effective on the Effective Date of the Contract.

2. California Code of Regulations, Title 8, Industrial Relations, Division 1, Chapter 4, Division of Industrial Safety.

3. OSHA - Occupational Safety and Health Administration.

4. CDPH – California Department of Public Health.

5. SCAQMD - South Coast Air Quality Management District.

C. Specifications or Drawings shall not be construed to permit deviation from the requirements of governing codes unless approval has been obtained from legally constituted authorities having jurisdiction, and the Architect. The Contract Documents may contain more stringent requirements than those legally required.

D. Permits and Fees: Refer to the General and Supplementary Conditions.

1.03 SUBMITTALS

A. Provide submittals in accordance with Section 01 3300: Submittal Procedures and with specific requirements of Division 23 sections, as applicable.

B. After Architect's approval, the above information shall become the basis for inspecting and testing materials and actual installation procedures performed in the Work.

C. Shop Drawings: Submit one additional copy when control diagrams having line voltage connections are indicated. Shop Drawings shall be specifically prepared for the Work of this Project. Drawings prepared in accordance with requirements of Section 01 3113: Project Coordination and Section 01 3300 may be provided by the Architect to serve as a background for the Shop Drawings. Shop Drawings shall comply with the requirements of Section 01 3113 and Section 01 3300 and shall indicate at a minimum:

1. Complete system layout of equipment, components, ductwork, and piping, indicating service clearances, duct and pipe sizes, fitting types and sizes, top or bottom of duct and pipe elevations, distances of ducts, pipes and equipment from building reference points and hanger / support locations. All the above items shall be coordinated on the shop drawings according to the requirements of Section 01 3113.

2. Schedule and description of equipment, ductwork, piping, fittings, valves, dampers, and controllers.

1.04 PROJECT RECORD DOCUMENTS

A. Comply with provisions of Section 01 7700: Contract Closeout.

B. Project Record Drawings:

1. Provide a complete set of mechanical and control system drawings in AutoCAD and, if available, BIM, complete with external reference drawings, fonts, blocks and plotter pen color/line thickness settings on CD-ROM. Also submit one set of full size reproducible plots on vellum and three sets of prints.

2. Before Contract Completion, deliver corrected and completed prints to the OAR. Delivery of project record documents to the OAR does not relinquish responsibility of furnishing required information omitted from project record documents.

C. Operation and Maintenance Manuals:

1. Submit operation and maintenance manuals in required form and content. If no revisions are required, furnish one additional copy. If revisions are required, one copy shall be returned with instructions for changes; perform such changes and return manuals. Manuals shall be bound in accordance to Section 01 7700. Deliver manuals to the OAR. Submit an electronic copy of the entire manual in PDF file format.

2. Contents of Manual:

a. Title sheet with Project name, including names, addresses and telephone number of Contractor, installer, and related equipment suppliers.

b. Manufacturer's operating instructions including, but not limited to, the following:

1) Identification of components and controls.

2) Pre-start checklist and start-up procedures.

3) Normal operation settings and checklists.

4) Pre-shut down checklist and shut down procedures.

5) Trouble shooting checklist and guidelines.

6) Recommendations for optimum performance.

7) Warnings and safety precautions on improper or hazardous operational procedures or conditions

c. Manufacturer's product data and parts and maintenance booklet for each item of equipment furnished under Division 23 that includes the following as a minimum:

1) Manufacturer’s model, identification and serial numbers.

2) Exploded view of assembly drawings identifying each component or part with the relevant part number.

3) Directory of manufacturer’s representatives, service contractors and part distributors.

4) Maintenance and trouble-shooting instructions, including schedule for preventive maintenance, periodic inspection and cleaning criteria.

d. Project Record Drawings: Complete set of mechanical and control system drawings in 50 percent reduced print format shall be furnished with the manual. Submit the above record drawings on CD-ROM in AutoCAD and, if available, BIM, complete with external reference drawings, fonts, blocks, and plotter pen color/line thickness settings.

e. Testing, Adjusting, and Balancing reports: Submit as specified in Section 01 4525.

f. South Coast Air Quality Management District (SCAQMD) permits to install and operate boilers, water heaters and other fuel burning equipment and third-party source test reports as required by SCAQMD to allow start-up and operation of equipment.

g. Los Angeles County industrial waste permits.

h. Valve directory complete with location, function, size, and model of each valve with reference to the project record drawings.

i. Equipment and component identification chart complete with location, function, size, and model of each equipment or component with reference to the project record drawings.

1.05 COORDINATION

A. Contract Documents indicate extent and general arrangement of Work under Division 23. Contractor shall coordinate work in accordance with Section 01 3113 requirements and make adjustments as required to provide maximum headroom, a neat arrangement to keep passageways and openings clear to provide accessibility and provisions for maintenance, and to meet code requirements.

1.06 DELIVERY, STORAGE, AND HANDLING

A. Delivery and Storage: Deliver materials to Project site in their original unopened containers with labels intact and legible at time of delivery. Store in strict accordance with manufacturer's recommendations.

B. Do not store plastic pipe or materials in direct sunlight.

1.07 PRELIMINARY OPERATION

A. OAR may require any portion of mechanical Work to be operated before Substantial Completion. Such operation shall be in addition to regular tests, demonstrations and instructions required under the Contract Documents, and shall be performed as required.

B. Notify the Project Inspector at least 24 hours in advance of lighting or re-lighting pilots.

1.08 TRAINING OF OWNER PERSONNEL

A. Training of Owner’s personnel shall include:

1. A minimum of 8 hours of on-site overview of the overall Mechanical System.

2. Refer to Division 23 sections for specific training on each of the components of the Mechanical System.

3. A minimum of 8 hours of on-site overview identifying location and function of all Control Valves and Actuator assemblies.

4. A minimum of 40 hours of (in classroom) software training for a minimum of 20 owner’s personnel on EMS/BMS if such systems are utilized in the project. Training shall be conducted at control contractor training facility with computer setup for each person attending.

B. Contract shall include the cost of training Owner operation and maintenance personnel in operating, adjusting, maintenance, trouble-shooting, and Project site repair of each component, equipment, or system provided under this Contract.

C. Operational and maintenance training shall be conducted on the Project site, unless indicated otherwise.

D. Upon completion of Owner training, a completion certificate indicating the nature of the training and a description of the systems, complete with equipment and component lists shall be issued to each trainee. The certificate should be issued in duplicate with one copy retained by OAR.

E. An attendance sheet with the names and signatures of all participants attending the training shall be submitted to the OAR and kept as part of the project documents.

1.09 GUARANTEES AND DAMAGE RESPONSIBILITY

A. Sound of water flowing in piping shall not be transmitted to building structure. Operation of mechanical system shall not produce operational sounds that can be heard outside of rooms enclosing apparatus or equipment.

PART 2 – PRODUCTS

2.01 MATERIALS AND EQUIPMENT

A. Unless otherwise specified, materials and equipment shall be new, in good and clean condition. Equipment, materials, and components shall be of the make; type and model number noted on Drawings or specified. Pieces of equipment of the same type shall be by the same manufacturer.

B. Whenever an item is listed by a single proprietary name, with or without model number and type, it shall be for purpose of design only, to indicate characteristics and quality desired. Proprietary designation listed on Drawings, or listed first in Specifications, is used as a basis for design to establish a standard for quality and performance and space requirements.

C. HVAC equipment products from different manufacturers are never identical. Equipment approved as being equal is interpreted as being equivalent in capacity, performance and quality. The dimensions, weight, configuration and utility requirements could be quite different from the equipment used as the basis of design. Due to these differences, additional coordination and adjustments by the Contractor are required. For the equipment to be deemed truly equal, the additional coordination and adjustments by the Contractor should not incur any additional cost to the Owner and any additional labor to the design team.

D. Equipment and materials indicated or required to be installed outdoors shall be of the type that is designed, manufactured, listed or approved by authorities having jurisdiction for outdoor installation by being resistant to the adverse effects of weather. All the additional protective measures against outdoor weather required by the manufacturers' installation instructions and prevalent practice shall be provided.

E. For substitution of materials or products, refer to the General Conditions.

PART 3 – EXECUTION

3.01 SERVICE INTERRUPTIONS, OFF-SITE, GAS AND WATER

A. Schedule Work so there shall be no service interruptions of existing systems or systems during normal hours of operation of affected systems and facilities.

B. When service interruptions are mandatory, arrange in advance with the OAR as to time and date of such interruptions.

C. Systems, which are interrupted, shall be returned back into operation in such manner that they will function as originally intended.

3.02 CUTTING, NOTCHING, AND BACKING

A. Conform to California Building Code, Title 24, Part 2, for notches and bored holes in wood and for pipes and sleeves embedded in concrete and for cuts in steel, as detailed on structural Drawings.

B. Where pipes or ducts pass through, or are located within one inch of any construction element, install a resilient pad, 1/2 inch thick minimum, to prevent contact.

C. Furnish all necessary provisions for recesses, chases, and accesses and provide blocking and backing as necessary for proper reception and installation of mechanical Work.

3.03 LOCATION OF PIPING AND EQUIPMENT

A. Location of piping, apparatus and equipment as indicated on Drawings is approximate and shall be altered to avoid obstructions, preserve headroom, and provide free and clear openings and passageways.

B. Trenches parallel to footings shall not be closer than 18 inches to the face of footings and shall not be below a plane having a downward slope of 2 horizontal to one vertical, from a line 9 inches above bottom of footing.

C. Pipe in tunnels shall be installed close to one side of tunnel to provide maximum space for passage. Pipe shall not be installed through crawl hole unless otherwise specified or detailed on Drawings.

D. Place equipment in locations and spaces indicated, disassemble and/or reassemble equipment as required by Project conditions.

3.04 TESTS AND TESTING

A. Tests shall be as required under the applicable sections of Division 23, including this Section.

B. Tests required by other sections of the Contract Documents include the following:

1. Test and balance of mechanical equipment and systems: Refer to Section 01 4525: Testing, Adjusting, and Balancing for HVAC.

2. Hydrostatic test of boilers: Refer to Section 01 4525: Testing, Adjusting, and Balancing.

3. Test of smoke and fire detectors: Refer to Division 26: Electrical.

C. Additional tests may be required in the case of products, materials, and equipment if:

1. Submitted items are altered, changed, or cannot be determined as exactly conforming to the Contract Documents.

2. Performance testing and results may also be required on certain items which are as specified, including fan, and pump performance.

D. Piping Tests:

1. Perform tests required to demonstrate that operation of mechanical systems and their parts are in accordance with Specifications covering each item or system, and furnish materials, instruments and equipment necessary to conduct such tests. Tests shall be performed in presence of the Project Inspector, and representatives of any governmental agency having jurisdiction. Work shall not be concealed or covered until required results are provided.

2. If required tests are not performed, Owner may provide in accordance with the Contract Documents.

3. Pressure gages furnished in testing shall comply with CPC. Air shall be bled from lines requiring hydrostatic or water tests.

4. Systems shall be pressure-tested in accordance with pipe testing schedule below. Pipe test shall indicate no loss in pressure after a minimum duration of 4 hours at test pressures indicated. Where local codes require higher test pressures than specified herein for fire sprinkler systems, local codes shall govern.

5. Fuel gas lines shall be first tested with piping exposed, before backfilling trenches or lathing; second with piping in finished arrangement, backfilled and paved where required, and walls finished.

6. Refrigerant piping may be tested with a halide detector or calibrated electronic testing equipment.

7. Piping systems may be tested as a unit or in sections, but entire system shall successfully meet requirements specified herein, before final testing by the Project Inspector.

8. Repair of damage to pipes and their appurtenances or to any other structures resulting from or caused by these tests, shall be provided.

E. Pipe Testing Schedule:

System Tested	**Test Pressure (psig)**	**Test With:**
Steam piping, hot water heating system piping and chilled water piping	150	Water
Vacuum pump or condensate pump discharge and condensate return piping	150	Water
Refrigeration piping		
R-22	400	Dry nitrogen
R-134a	300	Dry nitrogen
R-401a	300	Dry nitrogen
R-401b	300	Dry nitrogen
R-404a	500	Dry nitrogen
R-407c	500	Dry nitrogen
R-410a	600	Dry nitrogen
R-507	500	Dry nitrogen
Radiant panel piping	150	Water

F. Equipment Performance Assurance Tests:

1. Before operating any equipment or systems, a thorough check shall be performed to determine that systems have been flushed and cleaned as required and that equipment has been properly installed, aligned, lubricated, and serviced. Factory instructions shall be checked to verify installations have been completed and recommended lubricants have been installed in bearings, gearboxes, crankcases, and similar equipment. Particular care shall be furnished in lubricating bearings to avoid damage by over-lubrication and blowing out seals. Equipment shall also be checked for damage that may have occurred during shipment, after delivery, or during installation. Damaged equipment, products, and materials shall be replaced or repaired as required.

2. Upon completion of the above, adjust the system settings to within normal operating conditions to prevent the system from being damaged upon start-up.

3. Run-test the equipment after start-up for five consecutive days. Tests shall include operation of heating, ventilating, and air conditioning equipment and systems for a period of not less than two 8 hour periods at 90 percent of the full specified heating and cooling capacities. If equipment passes, install new filters. If equipment fails, it shall be adjusted and retested until system meets all applicable codes.

4. Equipment Start-up Reports: For each equipment or system on which start-up is performed, submit 8 copies of start-up report for review by the Architect.

    a. The start-up report shall include the manufacturer's standard start-up form completed and signed by the start-up technician.

5. Provide, maintain, and pay costs for equipment, instruments, and operating personnel as required for specified tests.

6. Provide electric energy and fuel required for tests.

7. Final adjustment to equipment or systems shall meet specified performance requirements.

8. Equipment, systems, or Work deemed defective during testing shall be replaced or corrected as required. Test until satisfactory results are provided.

G. Specific Coordinated Plan for Test and Balance:

1. Provide a narrative of the operational intent that clearly describes the function and sequence of operation of each component, equipment, or system installed. Instruct designated Owner personnel in the operation of the installed systems.

2. Prior to final test and balance, mechanical equipment and systems shall be operated and tested as indicated in Paragraph 3.04.F above to demonstrate satisfactory overall operation of the installed systems.

3. Immediately before starting tests, air filter media shall be cleaned or renewed. Roll-type filters shall be advanced to provide new clean media. Cleanable type media shall be thoroughly cleaned and re-oiled with new, clean oil as recommended by manufacturer if they are of viscous impingement type. Disposable type filters shall be replaced with new filters. Replaceable media shall be replaced with new media.

4. An accurate means of measuring air flow and temperatures shall be furnished to balance air supply, return, and exhaust systems so uniform temperatures occur in every room and design airflow is obtained through registers, diffusers, and grilles.

5. Systems shall be adjusted to provide airflows indicated including maximum fresh air and maximum return air. Dampers shall be checked for proper settings and operation. Air and water inlet and leaving temperatures at coils shall be checked. Complete operational data including airflows, room temperatures, fan speeds, motor currents, plenum, and duct static pressures shall be tabulated.

6. Welding performed as part of this Division may be subject to radiographic inspections at random in accordance with requirements specified in Section 23 0513: Basic HVAC Materials and Methods.

3.05 NOISE AND VIBRATION REDUCTION

A. Correct noise or vibration caused by mechanical systems. Provide all necessary adjustments to specified and installed equipment and accessories to reduce noise to the lowest possible level

B. Correct noise or vibration problems caused by failure to install work in accordance with Contract Documents. Include all labor and materials required as a result of such failure. Pay for re-testing of corrected noise or vibration problems by the project acoustical consultant including travel, lodging, test equipment expenses, etc.

3.06 PROTECTION, CARE AND CLEANING

A. In addition to storage criteria of the General Conditions, and provisions under Section 01 5000: Construction Facilities and Temporary Controls, the following shall be provided:

1. Provide for the safety and good condition of materials and equipment until Substantial Completion. Protect materials and equipment from damage.

2. Protect installed Work.

3. Replacements: In case of damage, immediately provide repairs and/or replacements as required.

4. Protect covering for bearings, open connections to tanks, pipe coils, pumps, compressors and similar equipment.

5. Interior of ductwork shall be maintained free of dirt, grit, dust, loose insulation, and other foreign materials.

6. Air handling equipment shall not be operated until building is cleaned and air filters are installed.

7. Fixtures, piping, finished brass or bronze, and equipment shall have grease, adhesive, labels, and foreign materials removed. Chromium, nickel plate, polished bronze or brass Work shall be polished. Glass shall be cleaned inside and out.

8. Before initial start-up and again before Substantial Completion, piping shall be drained and flushed to completely remove grease and foreign matter. Pressure regulating assemblies, traps, strainers, boilers, flush valves, and similar items shall be thoroughly cleaned. Tag system with an information tag listing responsible party and date of element, before initial start-up and again before Substantial Completion. Compressed air, oil, and gas piping shall be blown out with oil-free compressed air or inert gas. Refrigerant piping shall be cleaned as specified.

END OF SECTION

SECTION 23 05 13

BASIC HVAC MATERIALS AND METHODS

PART 1 – GENERAL

1.01 SUMMARY

A. Section Includes:

1. This Section prescribes basic materials and methods generally common to the Work of Division 23.

B. Related Requirements:

1. Division 01: General Requirements.

2. Division 23: Heating, Ventilating, and Air-Conditioning.

3. Division 26: Electrical.

4. Section 23 0593: Testing, Adjusting, and Balancing for HVAC.

5. Section 31 2323: Excavation and Fill for Utilities.

6. Section 33 1100: Site Water Distribution Utilities.

1.02 SUBMITTALS

A. Provide in accordance with Division 01, Section 23 0500 and specific requirements of each section of Division 23.

1.03 QUALITY ASSURANCE

A. Standards: Comply with applicable national, state, and local codes and standards: ASTM, ASME, and ANSI. Federal Specifications, AWWA, CISPI, NFPA, FM Global, UL, CPC (California Plumbing Code), CMC (California Mechanical Code), CSA.

B. Qualifications of Manufacturer: Products used in the Work of this Section shall be produced by manufacturers regularly engaged in manufacture of similar items and with a history of successful production as reviewed by the Architect.

1.04 COORDINATION

A. Coordinate related Work in accordance with provisions of Section 01 3113: Project Coordination.

PART 2 – PRODUCTS

2.01 GENERAL

A. Provide the following products if they are indicated in the Contract Documents or if they are required for the proper installation, function or operation of equipment, systems or components indicated in the Contract Document.

B. Provide the following products as a complete assembly with required accessories for a complete and functioning entity in compliance with governing codes and applicable standards as specified in Section 23 0500, manufacturer's instructions or as required.

1. Omission of minor details in the Contract Documents does not waive and/or otherwise relinquish compliance with the above requirements.

2.02 MANUFACTURERS AND MATERIALS

A. Air Compressor: (Not Used)

B. Air and Dirt Separators: (Not Used)

C. Balancing Valves: (Not Used)

D. Boiler Blow-Off Valve: (Not Used)

E. Ball Valves: Bronze, 2 inches and smaller:

BV-1 Class 150, 600 psi, CWP, 2 piece construction reinforced Teflon seats, full port, adjustable packing gland, stainless ball and stem, threaded ends.

Hammond UP-8303A/UP-8305/UP-8513, NIBCO T-685-80-LF/TS-685-66-LF, Milwaukee UPBA400S/450S, or equal.

BV-2 Class 150, 600 psi CWP, 2-piece construction, bronze body, reinforced Teflon seats, adjustable packing gland, (no threaded stem designs allowed), threaded ends.

Hammond UP8301A, NIBCO T-585-70, Milwaukee BA-400, or equal.

Ball Valves in Insulated Piping: Use extended operating handle of non-thermal conducive material, and protective sleeve that allows operation of valve without breaking the vapor seal or disturbing insulation and memory stops that are fully adjustable after insulation is applied. NIBCO Nib-Seal Handle.

F. Butterfly Valves: (Not Used)

G. Check Valves:

1. Bronze, 2-inch and smaller:

CHV-1 Class 125, 200 CWP swing check, Teflon disc, threaded ends. .

NIBCO T-413-Y, Milwaukee 509-T, Hammond IB-940, or equal.

CHV-2 (Not Used)

2. Cast Iron 2-1/2 and larger:

CHV-3 Class 125, 200 psi, CWP, IBBM, renewable seat and disc, bolted cap, threaded ends:

Crane 372, Stockham G-927, NIBCO T-918-B, or equal.

CHV-4 Class 125, 200 psi, CWP, IBBM, renewable seat, bronze or cast iron disc, bolted cap, flanged ends:

Stockham G-931, Crane 373, NIBCO F-918 B, Milwaukee F-2974-M, Hammond IR-1124-HI, or equal.

CHV-5 (Not Used)

CHV-6 (Not Used)

CHV-7 (Not Used)

H. Expansion Tank: (Not Used)

I. Flow Control Valve – Manual: (Not Used)

J. Venturi Flow Measuring Device: (Not Used)

K. Electronic Flow Readout Meter: (Not Used)

L. Gate Valves:

1. Bronze, 2 inches and smaller:

GV-1 Class 125, 200 psi CWP, bronze body and bonnet non-rising stem, inside screw, screw-in bonnet, solid disc, threaded ends:

Hammond IB645, Crane 1701, Milwaukee 105, American 3F, NIBCO T-113, or equal.

GV-2 Same as GV-1, except solder ends:

NIBCO S 113, Milwaukee 115, Hammond IB 647, or equal.

GV-3 Class 125, 200 psi WOG, rising stem, inside screw, screw-in bonnet, solid disc, threaded ends:

Stockham B-100, Crane 428, NIBCO T-111, Milwaukee 148, Hammond IB-640, or equal.

GV-4 (Not Used)

GV-5 (Not Used)

GV-6 (Not Used)

2. Iron Body Gate Valves; 2 1/2 inches and larger:

GV-7 Class 125, O S and Y, IBBM, bolted bonnet, solid disc, flanged ends:

Hammond IR1140HI, Stockham G623, Crane 465-1/2, NIBCO F-617-0, Milwaukee F 2885M, or equal.

GV-8 (Not Used)

M. Globe Valves:

1. Bronze, 2-inch and smaller:

GLV-1 Class 125, 200 psi, CWP, screw-in bonnet, Teflon disc, threaded ends:

Hammond IB440, Milwaukee 502, Stockham B-13-T, NIBCO T-211-Y, Crane 5TF, or equal.

GLV-2 Class 125, 200 psi, CWP, screw in bonnet, Teflon disc, solder ends.

Hammond IB-418, Milwaukee 1502, NIBCO S-211-Y, or equal.

GLV-3 (Not Used)

GLV-4 (Not Used)

2. Iron Globe Valves, 2 ½-inch and larger:

GLV-5 Class 125, 200 psi, CWP, OS&Y, IBBM, renewable seat and disc, bolted bonnet, flanged ends:

Hammond IR116 HI, Stockham G-512, Crane 351, Milwaukee F2981 M, NIBCO F-718-B, or equal.

GLV-6 (Not Used)

N. Heater Vent Pipe:

1. Schedule Number:

HVP-1 Shall be UL approved for service specified. Concealed heater vent pipe, including pipe in or through attic spaces, shall be Los Angeles City approved double wall metal vent pipe. For recessed wall heaters, furnish B.W. type. All others may be Type B, or B.W. Clearances must comply with Los Angeles City code and conditions of UL listing.

American Metal Products Co., Inc., Simpson Dura-Vent, AmeriVent, Hart & Cooley Mfg. Co., Metalbestos, or equal.

O. Liquid Level Gage:

LLG-1 Refrigerant type, carbon steel with stainless steel trim or all forged steel construction, back-seating standard design. Upper and lower valve furnished with ball check valves; 1/2 inch diameter glass on center. Four 3/16 inch diameter gage glass guard rods or slotted steel guard.

Peneberthy, Henry, Conbraco, or equal.

P. Piping:

1. Piping shall be continuously and permanently marked with manufacturer's name, type of material, size, pressure rating, and the applicable ASTM, ANSI, UL, or NSF listing. On plastic pipe, date of extrusion must also be marked.

2. Underground non-ferrous pressure pipes shall be installed with proper color tracer wires. Refer to color code provisions in Section 23 0553: HVAC Identification.

Q. Pipe Isolators:

PLA-1 Absorption pad shall be not less than 1/2 inch thick, unloaded. Pad shall completely encompass pipe.

Holdrite, LSP, Stoneman, Potter-Roemer, Trisolator, PR-Isolator, or equal.

PLA-2 Plastic cushion to form an insulating liner and eliminate metal to metal contact when securing copper tubes and pipes in air conditioning and refrigeration insulation preventing galvanic erosion. (Acoustical Type for Sound Absorption)

Hydra-Zorb Cushion Clamps, LSP Products Group Acousto Clamp, or equal.

R. Pressure Gage: Aluminum or steel case, minimum 4-1/4 inches dial; pressure type or combination vacuum-pressure type, with provisions for field calibration. Dial indicator to indicate pressure in psi with accuracy to within plus or minus 0.5 percent of maximum dial reading. Furnish gages with restriction screw, size 60, to eliminate vibration impulses. Black case and ring, bourdon tube of seamless copper alloy with brass tip and socket. Three way gage cock, constructed of brass with stuffing box, 1/2 inch couplings, with fixed or movable cap nut to shut off pressure gage.

PG-1 Pressure type, black drawn steel case, 4 ½-inch glass dial, range approximately twice line pressure.

Marsh Keckley, Trerice, Weksler, Weiss, or equal.

S. Safety Relief Valves:

SRV-1 Combination temperature and pressure relief type. CSA approved. Set to open at 125 psi pressure.

Watts 40L, Cash-Acme NCLX-1, Wilkins TP220, or equal.

SRV-2 Same as SRV-1, except provide on storage type water heater with anode in dip tube.

Watts 10 x L, CashAcme NCLX-1, Wilkins TP220, or equal.

SRV-3 (Not Used)

T. Strainers:

STR-1 Description: Wye type with monel or stainless steel strainer cylinder (manufacturer's standard mesh), and gasketed machine strainer cap. Where indicated on Drawings, provide with valved (globe valve) blowout piping, same size as blowout plug.

1. 2-inch and smaller:

C.M. Bailey No.100-A, 250 lb., cast iron body, threaded, Keckley 'B', Spirax Sarco Y-type, or equal.

2. 2 ½-inch and larger:
C.M. Bailey No.100-A, 125 lb., cast iron body, flanged, or Victaulic style 732, 300 psi, ductile iron body, grooved, fusion bonded epoxy coated.
C.M.Bailey, Armstrong, Muessco, Keckley 'A', or equal.

STR-2 Y pattern cast iron bodies, 125 psi, monel screen. Open area at least twice the cross-sectional area of IPS pipe in which strainer is installed and may be woven wire or perforated type. Screwed ends for sizes up to 2 inches, flanged ends fusion bonded epoxy coated for 2 1/2 inches and larger perforations, in accordance with the following:

1. Steam service - 40 square mesh.

2. Other services - 16 square mesh.

Bailey No.100, Armstrong, RP&C, Keckley, or equal.

U. Temperature Control Valves:

TCV-1 Motor-operated valve, Forged brass bodies rated at no less than 400 psi working pressure; Chrome plated brass ball and stem, female NPT union ends, dual EPDM lubricated O-rings and TEFZEL characterizing disc.

Operated by Electronic Valve Actuator, manufactured, brand labeled or distributed by Belimo, TA, Honeywell, or equal.

TCV-2 Valves, automatic, electric, 3-way control.

Packed type bronze body and trim. Metal-to-metal seats designed for tight shut-off. Constant total flow throughout full plug travel. Valve designed for 150 psig steam working pressure. Valve operated by spring return motor with gear train. Valves screwed for sizes 2 inches and smaller.

Honeywell, Powers, Barber-Colman, Leonard, or equal.

TCV-3 (Not Used)

V. Thermometers

1. Industrial:

T-1 Straight type with fixed or ratable stem, extruded or cast brass or cast aluminum case and brass separable well 6 inches minimum scale, angle or straight type range 30 degrees - 240 degrees F.

Weksler, Trerice, Weiss, Ashcroft, Marshalltown, or equal.

T-2 Round type 3 ½-inch minimum dial range of 100 between 30 degrees and 155 degrees F, color coded red above 150 degrees F. Brass chrome plated case.
Ashcroft, U.S. Gage, Marsh, Weiss, or equal.

2. Remote:

T-3 Liquid-filled capillary type with bulbs as required for remote and insertion mounting dials of 3 ½-inch minimum diameter, non-ferrous internal parts, external means for re-calibration, glass or plastic lens and steel or non-ferrous case suitable for wall, duct or panel mounting range 30 degrees to 240 degrees F.

W. Traps: (Not Used)

X. Valves (Air Vent):

VAV-1 Hot or chilled water air release valves shall be cast brass rated for 150 psig design pressure and 270 F operating temperature.

Spirotherm, Bell & Gossett, Taco, or equal.

VAV-2 Hot or chilled water space heating system air valve, brass with nickel trim 1/4 inch connection, disc type for manual or automatic venting.

Hoffman 500, Spirotherm, Watts, or equal.

VAV-3 Brass petcock, 1/4 inch connection by 1/4 inch copper tube to high point of coil or line by means of a tapped cap on top of 6 inches vertical nipple. Petcock to be installed approximately 5 feet 6 inches above finish floor.

Amtrol, Watts, Dole, or equal.

Y. Vacuum Valves:

VV-1 Vacuum valves; for vacuum serve, 125 psig working pressure, cast iron body, spring loaded lubricated plug type.

General Controls, Honeywell, Val-Matic, or equal.

Z. Flanges: Flanges shall be furnished and installed at each flanged connection of each type of equipment, tanks, and valves. Faces of flanges being connected shall be furnished alike. Connection of a raised face flange to a flat-faced flange is not permitted. Flanges shall conform to following schedules:

TYPE OF PIPE	FLANGE
Screwed black or galvanized grooved steel pipelines.	125 pound black cast iron screwed flange, flat faced or grooved flange adapters, Victaulic Style 741, Tyco-Grinnell Fig. 71, Gruvlok Fig. 7401, or equal.
Welded or grooved steel pipe, except high pressure steam lines.	150 pound black forged steel welding flanges, 1/16 inch raised face ASTM A105, Grade II or grooved flange adapters, Victaulic Style 741, Tyco-Grinnell Fig. 71, Gruvlok Fig. 7401, or equal.
Copper and brass pipe or tubing.	150 pound cast bronze, flat-faced flange with solder end or grooved flange adapters, Victaulic Style 641, Tyco-Grinnell Fig. 61, Gruvlok Fig. 6084, or equal.

1. Gasket material for flanged connections shall be full faced or ring type to suit facing on flanges and shall be furnished in accordance with following schedule

SERVICE	TYPE
Cold water	1/16 inch thick neoprene
Steam, hot water	1/l6 inch Teflon

Grooved end flange adapters supplied with pressure responsive elastomeric Gaskets supplied with grooved flange adapters shall be pre-lubricated by the manufacturer. Grade of gasket to suit intended service.

AA. Unions:

1. Unions shall be furnished and installed in accordance with the following requirements (unless flanges are furnished):

   a. At each threaded or soldered connection to equipment and tanks, except in Freon or fuel gas, piping systems, whether indicated or not.
   b. Immediately downstream of any threaded connection to each manually operated threaded valve or cock, and each threaded check valve, yard box or access box except those in Freon piping systems, whether indicated or not.
   c. At each threaded connection to threaded automatic valves (except those in Freon piping systems) such as reducing valves and temperature control valves, whether indicated or not.
   d. If grooved piping is used, couplings shall serve as unions. Additional unions are not required

2. Unions shall be located so that piping can be easily disconnected for removal of equipment, tank, or valve.

PART 3 – EXECUTION

3.01 EXAMINATION

A. Examine areas and conditions under which Work of this Section shall be performed. Correct conditions detrimental to proper and timely completion of Work. Do not proceed until unsatisfactory conditions have been corrected.

3.02 INSTALLATION

A. Provide all materials and equipment for the Work. Furnish and install necessary apparatus, parts, materials, and accessories.

B. Pipe Installation:

1. Install piping parallel to wall and provide an orderly grouping of proper materials and execution.

2. Piping shall clear obstructions, preserve headroom, provide openings and passageways clear, whether indicated or not. Verify the Work of other Divisions to avoid interference.

3. If obstructions or the Work of other Divisions prevent installation of piping or equipment as indicated by the Drawings, perform minor deviations as required by the Architect.

4. Install piping after excavation or cutting has been performed. Piping shall not be permanently enclosed, furred in, or covered before required inspection and testing is performed.

5. Exposed polished or enameled connections from fixtures or equipment shall be installed with no resulting tool marks or threads at fittings. Residue or exposed pipe compound shall be removed from exterior of pipe.

6. Piping shall be concealed in chases, partitions, walls, and between floors, unless otherwise directed or specifically noted on Drawings. When penetrating wood studs, joists, and other wood members, provide such members with reinforcement steel straps of Continental Steel & Tube Co., ULINE, Independent Metal Strap, or equal.

7. Reduce fitting where any change in pipe size occurs. Bushings shall not be furnished unless specifically reviewed by the Architect, or indicated on Drawings.

8. Piping subject to expansion or contraction shall be anchored in a manner, which permits strains to be evenly distributed. Swing joints or expansion loops shall be installed. Seismic restraints shall be installed so as not to interfere with expansion and contraction of piping. Seismic loops required at all building separations.

9. Immediately after lines have been installed, openings shall be capped or plugged to prevent entrance of foreign materials. Caps shall be left in place until removal is necessary for completion of installation.

10. Couplings shall not be installed except where required pipe runs between other fittings are longer than standard length of type of pipe being installed and except where their installation is specifically reviewed by the Architect.

11. Water piping shall be installed generally level, free of traps, unnecessary offset, arranged to conform to building requirements, clear of ducts, flues, conduits, and other Work. Piping shall be arranged with valves installed to provide for complete drainage and control of system. Piping shall not be installed which causes an objectionable noise from flow of water therein under normal conditions. Refer to Section 23 0500: Common Work Results for HVAC.

12. Water lines may be installed in same trench with sewer lines, provided bottom of water line is 12 inches minimum above top and to the side of sewer line.

13. Hot and chilled water circulating piping installed for space heating or cooling shall pitch up to a high point at a slope of 1/4 inch in 10 feet in the direction of flow. Where supply and return lines are exposed, both lines shall pitch in same direction. Otherwise, where possible, lines shall pitch up toward compression tank.

14. Changes in pipe sizes shall be furnished with eccentric reducers, flat on top. Offsets to clear obstruction shall not be installed so as to produce air pockets.

C. Pipe Sleeves and Plates:

1. Provide and install pipe sleeves of Schedule 40 black steel pipe or Schedule 40 PVC plastic pipe in concrete or masonry walls, footings, and concrete floors below grade. Provide and install adjustable submerged deck type sleeves at locations where pipes pass through concrete floors, except concrete slab floors on grade, and at locations where soil pipe for floor type water closets passes through concrete floors.

2. Sleeves shall provide 1/2 inch clearance around pipes, except plastic pipe shall have 1-inch clearance. Caps of deck type sleeves shall be removed just prior to installation of pipe. Area around sleeves shall be smooth and without high or low spots. Sleeves in walls shall not extend beyond exposed surface of wall. Sleeves in concrete floors and walls shall be securely fastened to forms to prevent movement while concrete is being placed.

3. Piping installed on a roof shall clear the roof surface by 10 inches minimum, with or without insulation. Bottom of individual fittings may infringe on 10 inches clear space but not groups of fittings or fittings located within 27 inches of each other.

4. Stiles shall be provided to facilitate crossing of piping when parallel piping runs are laterally greater than 12 inches out-to-out, or any pipe is higher than 18 inches, and more than 40 feet long or runs between 2 or more major pieces of equipment or housings greater than 20 feet apart. Stiles shall be not less than 20 inches wide with a minimum tread depth of 10 inches. Where stiles are required, they shall be located so greatest obstructed distance is 30 feet.

5. Where pipes pass through waterproofed walls, floors, or floors on grade, sealant with Link-Seal Modular Seals, or equal, between pipe and sleeve to provide a waterproof joint. Where earth is in contact with pipe on both sides of a wall or foundation, the waterproof joint is not required. Commercial rubber compression units may be furnished instead of sealed sleeves if reviewed by the Architect.

6. A swing joint, or other required device, shall be furnished and installed in hot water lines with 10 feet of sealant or compression joint to allow for expansion.

7. Pipe sleeves shall be provided where pipes intersect footings or foundation walls and sleeve clearances shall provide for footing settlement, but not less than one inch all around pipe.

D. Welding of Pipe and Qualifications of Welder:

1. Joints above grade or accessible conduit or tunnels in steel piping may be either welded or screwed unless specifically indicated otherwise on Drawings or specified. Joints in below grade steel piping, whether in insulation or not, shall not be welded, unless otherwise indicated.

2. Welded joints in pipe shall be continuous around pipe and shall comply with ASME B31: Code for Pressure Piping, unless otherwise specified.

3. Each pipe weld shall be stamped with welder's identification mark. Welding shall be performed by welders possessing a valid certificate of qualification for welding carbon steel welding pipe in horizontal position (2G) and horizontal fixed position (5G) in accordance with the requirements of Section IX of the ASME Boiler and Pressure Vessel Code, by an Owner-recognized, DSA approved testing laboratory.

4. Before any welder performs welding on the Work, furnish the Project Inspector with a copy of welder's valid qualification papers and obtain verification. Welder qualification is not valid unless it has been issued while welder was performing work for current employer, and has performed type of work described by qualification in the preceding 3 months.

5. Welding performed under these Specifications is subject to special tests and inspections including rigid Ultra Sonic Testing (UT) and radiographic inspection at random, in accordance with Technique for Radiographic Examination of Welded Joints by an Owner recognized, DSA approved testing laboratory.

E. Unacceptable Welds and Repairs to Welding:

1. Welds containing any of the following types of imperfections shall be deemed defective Work:

a. Cracks of any type.

b. Zones of incomplete (in excess of 1/32 inch) fusion or penetration.

c. Elongated slab inclusions longer than 1/4 inch.

d. Groups of slag inclusions in welds having an aggregate length greater than thickness of parent metal in a length 12 times the thickness of the parent metal.

e. Undercuts greater than 1/32 inch.

f. Overlaps, abrupt ridges or valleys.

2. When a defective weld is detected by examination as outlined above, two additional welds shall be radiographed at locations selected by the Project Inspector. If the two selected welds demonstrate compliant welding, then the two tested welds shall be deemed to be in compliance. Welding revealed by radiographs to be defective Work shall be removed, repaired, and tested by radiograph.

3. If either of the two selected welds demonstrates welding deemed to be defective Work, all welding in that portion of the Work shall be deemed defective Work and either: all welds shall be cutout, prepare new ends for welding and weld to comply with this Specification, or radiograph all welds, removing and repairing only such welding deemed to be defective Work.

4. Repair welding shall be performed in a manner in full compliance with ASME B31. The welded joints or repairs shall be spot examined with UT or radiographic tests in accordance with foregoing requirements.

5. Owner shall cause to be performed additional random UT and radiographic examinations of welds. Owner shall be responsible for the costs of any UT and radiographic examinations found to be in compliance with specified requirements.

6. Installer shall be responsible for the costs of UT and radiographic re-examinations of welds deemed defective Work and not in compliance with this Specification, and shall repair or replace said welds in accordance with specified requirements.

F. Welding Rods: Submit a written list of materials and proposed type of welding rods for review by the Architect.

G. Backing Rings: Backing rings may be submitted for installation provided the Product Data is submitted with the material list.

H. Qualification Tests for Low-pressure Welding:

1. Tests shall be performed on 3-inch standard weight pipe ASTM A53, Grade A, and shall be welded by acetylene and electric arc. Each sample shall consist of two pieces, each 10 inches long, with 30-degree bevel at point weld.

2. Two 20-inch samples shall be performed in the 2G and two 20-inch samples in the 5G positions, with positions defined in Section IX, ASME Boiler and Pressure Vessel Code. Welds shall have the reinforcement ground or machined flush to the surface of the pipe before testing. Samples shall be tested as full section tensile.

3. Weld shall develop a load of 90 percent of 50,000 psi, i.e., 45,000 psi or shall develop a fracture in parent metal.

4. Each qualified welder shall carry an identification card listing welder's name, date of test, and type of welding tests passed; signed by the welder and the laboratory.

5. A valid certificate of qualification issued in compliance with requirements of the ASME Boiler Pressure Vessel Code Section IX shall qualify a welder for issuance of a certificate for low-pressure pipe welding.

I. Certificates of Qualification for Welding of Unfired Pressure Vessels:

1. Certificates of qualification shall be issued by a laboratory recognized by the Owner in compliance with the requirements of the ASME Boiler Pressure Vessel Code Section IX. Qualifications shall be for both acetylene and arc welding of Schedule 40 ASTM A53, Type B, steel welded or seamless pipe in the Horizontal Position (2G) and the Horizontal Fixed Position (5G) as defined by said code.

NOTE: Certificate described above is not valid unless it has been issued while welder was working for his current employer, and unless welder has performed type of work described by certificate in the preceding three months. Requirements for possession of a valid certificate shall not be waived for welders fabricating unfired pressure vessels when the Specifications require compliance with ASME code or when welding pipe carries working pressures greater than 75 psi and temperatures greater than 250 degrees F.

J. Pipe Joints and Connections:

1. Pipe and tubing shall be cut per IAPMO Installation Standards. Pipe shall have rough edges or burrs removed so that a smooth and unobstructed flow shall be provided.

2. Threaded Pipe: Joints in piping shall be installed according to the following service schedule:

a. Refrigerant and Soap Piping: Litharge and glycerine, or Expando, Gasoila, or equal.

b. All other services Furnish sealant, suitable and as reviewed by the Architect.

3. Threads on pipe shall be cut with sharp, clean, unblemished dies and shall conform to ANSI/ASME B1.20.1 for tapered pipe threads.

4. Joint compounds shall be smoothly placed on male thread and not in fittings. Threaded joints shall be installed tight with tongs or wrenches and sealant of any kind is not permitted. Failed joints shall be replaced with new materials. Installation of thread cement or sealant to repair a leaking joint is not permitted.

5. Sharp-toothed Stillson, or similar wrenches, is not permitted for the installation of brass pipe or other piping with similar finished surfaces.

K. Copper Tubing and Brass Pipe with Threadless Fittings:

1. Silver brazed joints shall be used for attaching fittings to non-ferrous metallic refrigerant piping.

2. Non-pressure gravity fed condensate lines may be soldered with 95/5 solder.

3 Silver brazing alloy, Class BCUP-5. Surfaces to be joined shall be free of oil, grease, and oxides. Socket of fitting and end of pipe shall be thoroughly cleaned with emery cloth and wiped to remove oxides. After cleaning and before assembly or heating, flux shall be installed to each joint surface and spread evenly. Heat shall be applied in accordance with instructions in the Copper Tube Handbook issued by Copper Development Associates. Joints constructed of rough bronze fittings shall be provided as recommended by manufacturer.

4. Do not overheat piping and fittings when installing silver brazing.

5. Joints in non-ferrous piping for services not covered above shall be installed with solder composed of 95/5 tin/antimony, ASTM B32, Grade 5A. Surfaces to be jointed shall be free of oil, grease, and oxides. Sockets of fitting and end of pipe shall be thoroughly cleaned with emery cloth to remove oxides. Solder flux shall be sparingly installed and solder added until joint is completely filled. Do not overheat. Excess solder, while plastic, shall be removed with a small brush in order to provide an uninterrupted fillet completely around joint. Random inspection of joints shall be conducted by Project Inspector to ensure joints are lead-free.

6. Grooved end joints for copper piping shall be assembled in accordance with the latest manufacturer recommendations. Pipe ends shall be clean and free from indentations, projections, and roll marks in the area from pipe end to groove for proper gasket sealing. Grooving tools shall be as manufactured by Victaulic, RIDGID, MAG Tool, or equal.

L. Ring-Type Pipe: Joints shall be installed in accordance with manufacturer's instructions with grooved couplings, fittings and rubber rings. Couplings and pipe shall be compatible and of the same manufacturer. Rings shall be accurately located and installed by grooves in coupling. Pipe shall be installed with zero deflection unless otherwise specified. Pressure pipe shall be furnished with thrust blocks at each offset point.

M. Welded Pipe Joints:

1. Joints in welded steel pipelines shall be installed by oxyacetylene or electric arc process. Welding shall be continuous around pipe and provided as specified.

2. Butt welds shall be of the single V-type, with ends of pipe and fittings beveled approximately 37 ½ degrees. Piping shall be aligned before welding is started with the alignment maintained during welding.

3. Welds for flanges and socket fittings shall be of the fillet type with a throat dimension not less than pipe wall thickness.

N. Grooved End Pipe Joints: Grooved end joints for carbon steel piping shall be assembled in accordance with the latest manufacturer recommendations. Pipe ends shall be clean and free from indentations, projections, and roll marks in the area from pipe end to grove for proper gasket sealing. Grooving tools shall be as manufactured by Victaulic, RIDGID, MAG Tool, or equal.

O. Joints shall be Vic-Press 304TM, or equal, made with Victaulic Series 'PFT' tools and the appropriate sized jaw. Pipe shall be certified for use with Vic-Press 304TM system, and shall be square cut, properly deburred and cleaned, and marked at the required location to insure full insertion into the fittings and/or couplings.

P. Valves: Valves shall conform to the following:

1. Piping systems shall be furnished with valves at points indicated on Drawings and specified, arranged to provide complete regulating control of piping system throughout building and the Project site.

2. Valves shall be installed in a neat grouping, so that parts are easily accessible and maintained.

3. Pressure Independent Characterized Control valve type shall be suitable for service on which installed.

4. Valves shall be full size of line in which they are installed, unless otherwise indicated on Drawings or otherwise specified, and shall be one of types specified.

5. Provide chain operators on valves 2-inch and larger located 7 feet or more above the servicing floor level.

6. Valves for similar service shall be of one manufacturer.

7. Except where otherwise specified, valves shall be Belimo, Victaulic, Stockham, Crane, Jenkins, Milwaukee, Hammond, American Valve, NIBCO, Hoffman, or equal.

8. Ball valves below grade in yard boxes shall have stainless steel handles.

9. Temperature relief valves and combination temperature and pressure relief valves shall be as specified and furnished as set forth in this Section. Discharge pipe from relief valves shall be not less than discharge area of valve or valves it connects, based on discharge area of valves, and shall terminate as indicated and free of any traps. Valves shall be installed at following locations:

a. A combination temperature and pressure relief valve or combination of valves on each heating hot water boiler. Temperature sending element shall extend into water inside boiler.

10. Manual air vent valve assemblies shall be installed at each high point of hot water space heating and chilled water piping systems. Valves shall discharge through 1/4 inch diameter copper tubing and drain to nearest floor sink. Automatic type air vent valve shall only be installed where specifically indicated. Radiator, convectors, and finned pipe convectors shall be fitted with packless radiator valves, angle or straight pattern. Each convector or radiator installed as part of a space hot water heating system shall be furnished with a manual-type air vent valve.

Q. Strainers: Strainers shall be installed on each water main (except for fire line) downstream of the meter, above grade, when a pressure regulator assembly is not installed. Main strainer shall be of Y-flange or groove type. On closed loop chilled and heating hot water systems pump systems, a strainer shall be installed at each pump inlet and upstream of each flow control valve assembly. The control valve assembly may include a modulating temperature control valve and a flow-limiting valve, manufactured by Griswold, AutoFlow, Flow Control Industries, Inc., or equal.

R. Hangers and Supports:

1. Piping shall be securely fastened to building structure by approved iron hangers, supports, guides, anchors, and sway braces to maintain pipe alignment to prevent sagging and to prevent noise or excessive strain on piping due to uncontrolled or seismic movement under operating conditions. Hangers and supports shall conform to Manufacturer's Standardization Society Specification SP-69. Hangers shall be relocated as required to correct unsatisfactory conditions that may become evident when system is placed into operation. Appliances, heat exchangers, storage tanks, and similar equipment shall be securely fastened to structure in accordance with seismic requirements. Outdoor metal hangers and supports shall be hot-dipped galvanized steel, unless otherwise specified.

2. Piping shall not be supported by wire, rope, wood, plumbers' tape, or other non-recognized devices.

3. Hangers and supports shall be designed to support weight of pipe, fittings, weight of fluid and weight of pipe insulation, and shall have a minimum factor of safety of 5, based on ultimate tensile strength of material installed.

4. Burning or welding of any structural member under load is not permitted. Field welding not specified on Drawings or reviewed Shop Drawings is not permitted without review by Architect and DSA.

5. Burning holes in beam flanges or other structural members is not permitted without review by the Architect and DSA.

6. Pipe hangers on piping covered with low temperature insulation shall be installed on outside of insulation and not in contact with pipe unless otherwise detailed on Drawings. Insulation shall be protected by 18 gage galvanized steel shield, with a minimum length of 10 inches, installed completely around pipe covering between covering and hanger. Installing hangers directly on pipe and butting adjoining sections of insulation against hanger is permitted provided void and hanger rod are properly insulated and sealed so that no sweating occurs at hangers.

7. Hanger rods shall be fastened to structural steel members with suitable beam clamps. Clamps shall be Tolco, Carpenter & Patterson, Fee and Mason, or equal, as follows:

   a. Tolco I beam, Fig.62 for maximum 1000 lbs.

   b. Tolco I or WF beam, Fig. 329, for maximum of 1290 lbs.

8. Hanger rods shall be fastened to concrete inserts in concrete slabs or beams. Inserts shall be Tolco, Carpenter & Patterson, Fee and Mason, or equal, as follows:

   a. Tolco Fig.310 for maximum of 600 lbs.

   b. Tolco Fig. 309 for maximum of 1140 lbs.

9. For fastening to wood ceilings, beams, or joists, furnish Anvil Fig. 128R, Anvil Fig. 153, Tolco 78, or equal pipe hanger flange fastened with drive screws. Under wood floors, 3/8 inch hanger rods shall be hung from 2-inch by 2-inch by 1/4 inch angle clips 3-inch long, with two staggered 10d nails, clinched over joist.

10. Hanger rod sizes for copper, iron, or steel pipe: 3/8 inch for pipe sizes 1/2 inch through 2-inch, 1/2 inch for pipe sizes 3-inch, 4-inch and 5-inch, 5/8 inch for pipe size 6-inch, and 3/4 inch for 8-inch and 10-inch pipe.

11. Turnbuckles, if furnished, shall provide a load carrying capacity equal to that of the pipe hanger with which they are being installed.

12. Pipe hangers shall be of same size, or nearest larger manufactured size available, as pipe or tubing on which they are being installed.

13. Hangers, clamps, and guides furnished for support of non-metallic pipe shall be padded with 1/8 inch thick rubber, neoprene, or soft resilient cloth.

14. Where special pipe-supporting requirements in the Specifications conflict with any standard requirements specified herein, the Specification requirements shall govern.

15. Vertical Piping:

   a. Vertical pipe risers shall be securely supported with riser clamps of recognized type. Risers in reinforced concrete buildings shall be furnished with extension clamps fastened to pipe above each concrete floor slab with extended arms of clamp to rest on slab. Clamps shall be provided with lead or Teflon liners when installed on copper tubing. Clamps shall be plastic-coated when installed on non-ferrous pipe or tubing.

   b. Copper tubing in sizes 1 ½-inches and larger and steel pipelines passing up through building shall be supported at each floor of building or every 15 feet whichever is less.

   c. Copper tubing sizes 1 ¼-inch and smaller shall be supported at not intervals not more than 6 feet on center. Special provisions shall be

installed for vertical lines subject to expansion and contraction caused by operating temperature differences.

d. Vertical cast iron pipelines shall be supported from each floor and at its base. Malleable iron or steel pipe clamps with minimum thickness of 1/4 inch shall be furnished and fastened around pipe for support.

16. Horizontal Piping:

a. Pressure piping on roofs shall be supported from stands, trapezes, or structures so that the bottoms of pipes clear the roof surface by 10 inches.

b. Insulated steam and space heating hot water supply and return piping shall be supported with Tolco Figure 4, B-Line Figure B3140, Anvil Figure 212, or equal, steel hangers with welded eye rods to permit hinge movement at point of attachment of hangers. Hinge movement at point of support shall be provided by welded eye linked rods Tolco Figure 101L, B-Line Figure B3211X, Anvil Figure 278X, or equal.

c. Chilled water supply and return piping, condenser water piping, insulated refrigerant piping may be supported with Tolco Figure 1, B-Line Figure B3100, Anvil Figure 260, or equal, hangers with rods, turnbuckles and inserts suitable for above hangers.

d. Maximum hanger and support spacing shall conform to CPC schedule for horizontal piping installed above grade.

17. A hanger or support shall be installed close to the point of change in direction of a pipe run, in either a horizontal or vertical plane.

18. When practicable, supports and hangers for cast iron soil pipe shall be installed as close as possible to joints and when hangers or supports are not located within one foot of a branch line fitting, an additional hanger or support shall be installed at fitting.

19. In systems where grooved piping is used, couplings shall be provided with angle pattern bolt pads to comply with support and hanging requirements of ANSI/ASME B31.1, ANSI/ASME B31.9, and NFPA Pamphlet 13.

S. Flashings:

1. Each pipe, duct, or gas-fired equipment vent passing through roof shall be installed with waterproof flashing.

2. Flashing or flanges on pipes, vents, and ducts passing through a tile or slate roof shall be constructed of sheet lead. Flashing for pipes and heater vents passing through a roof shall be 4 pound soft sheet lead. Flashing and flanges for ducts and heater vents passing through exterior walls shall be 22 gage sheet metal. Flanges and flashing shall be installed waterproof at point of connection with pipe or duct. No soldered joints on roof flashings will be allowed.

3. Lead flashing and flanges shall be constructed of 4 pound sheet lead with burned joints. Flange of lead flashing or lead flange on a duct shall extend out onto roof

a minimum of 12 inches from pipe or duct. Lead flashing shall extend up the pipe or duct not less than 7 inches.

4. Sheet metal flashing shall be constructed of 24 gage galvanized sheet steel. Flanges on these flashings shall extend out onto roof a minimum of 10 inches from pipe or duct. Flanges on ducts through exterior walls shall extend out from duct a minimum of 2 ½ inches. Flanges on gas-fired equipment single-wall vents shall be of ventilated type. Type B gas vents through a roof shall be furnished with non-ventilated flashing as per NFPA Pamphlet 211.

5. Cast iron, steel, brass, and copper pipe, which terminate less than 18 inches above roof, shall be furnished with a combination counter-flashing and vandal-proof hood for protection against water, birds and foreign matter. Cast iron, steel, brass and copper pipe, which does not terminate within 18 inches of roof, shall be furnished with a counter-flashing sleeve. Pipe, which terminates more than 18 inches above roof, shall be furnished with protection against entrance of water, birds, and foreign matter.

6. Counter-flashing and combination counter-flashing sleeves and vandal-proof hoods shall be cast iron, vandal-proof, threaded, sealed or approved gas-heated sleeve type. Counter-flashing sleeves on each of these items shall extend down over flashing a minimum of 3/4 inch.

7. Flashing and flanges on ducts shall be installed waterproof at point of connection to the duct by riveting and soldering. Storm collars shall be securely screwed and installed waterproof around appliance vent pipe immediately above flashing.

8. Vent piping above roof shall be furnished with a combination counter-flashing sleeve and vandal-proof hood.

T. Equipment Installation: Install roof or floor mounted equipment on level platforms, housekeeping pads or curbs and provide sound, vibration and seismic control measures per Section 23 0548, unless indicated otherwise whether indicated on drawings or not.

END OF SECTION

SECTION 23 05 48

HVAC SOUND, VIBRATION AND SEISMIC CONTROL

PART 1 – GENERAL

1.01 SUMMARY

A. Section Includes: Reduction or elimination of excessive noise or vibration within building due to operation of equipment, machinery, piping, and ductwork as specified.

1. Vibration isolators.

2. Seismic restraint devices.

3. Lining and enclosing ductwork.

4. Acoustic louvers.

5. Sound attenuation boots at supply, return, exhaust and transfer air inlets, outlets and openings.

6. Flexible ducts, conduits and piping.

B. Related Requirements:

1. Division 01: General Requirements.

2. Section 23 0593: Testing, Adjusting, and Balancing for HVAC.

3. Section 23 0500: Common Work Results for HVAC.

4. Section 23 0513: Basic HVAC Materials and Methods.

5. Section 23 3000: Air Distribution.

6. Section 23 8000: Heating, Ventilating and Air Conditioning Equipment.

1.02 GENERAL REQUIREMENTS

A. Provide vibration isolators to eliminate or reduce the transmission of vibration noise to any part of building and mitigate vibration frequency and load imposed by equipment. Vibration isolators, base frames, inertia bases and seismic restraints shall be of sufficient size, flexibility and load distribution configuration to assure that deflection, stability and seismic restraint requirements are met without permitting excessive movement when starting. For typical units, no fewer than four isolators shall be provided. Isolators shall be provided to deflect uniformly under operating gravity and equipment thrust loadings to within plus or minus 10 percent of specified deflection values.

B. Static deflections specified are based on the anticipated equipment characteristics. In the event the equipment proposed by the Contractor has characteristics other than those

indicated, particularly the rated rpm, the static deflection shall be re-evaluated and the proper mountings and other devices shall be provided.

C. Where fabricated vibration isolator units are indicated, furnish manufacturer's standard catalog products with printed loading ratings or certified submittals

D. Seismic Requirements:

1. Refer to Seismic Restraint Manual: Guidelines for Mechanical Systems, published by SMACNA and approved by DSA, for minimum seismic restraints required on mechanical components design and construction details.

2. Provide seismic restraints for mechanical equipment or components specified. Where equipment is specified with proprietary names, design for seismic restraints is for first proprietary name listed.

3. Provide restraints, bracing and anchorage as required for the mechanical equipment, electrical equipment and components specified in the Contract Documents. Restraints, bracing and anchorage shall be installed to resist the total design earthquake or wind loads in any direction in accordance with CBC and SMACNA guidelines.

4. Provide restraints, bracing, and anchorage for the mechanical equipment and components.

5. For rigidly mounted liquid filled steel pipe, comply with the following:

   a. Provisions of NFPA Pamphlet 13, section for sway bracing.

   b. Provisions of NFPA Pamphlet 13, section for earthquake protection.

   c. Hanger spacing as specified in Section 23 0513 under Hanger Spacing Schedule.

   d. SMACNA Seismic Restraint Manual: Guidelines for Mechanical Systems and approval by DSA.

6. For flexibly mounted liquid filled steel pipe, comply with the following:

   a. Provisions of the California Building Code for flexibly mounted equipment.

   b. Provisions of VISCMA (Vibration Isolation and Seismic Control Manufacturer’s Association) Seismic Control Device Installation, Best Practices Manuals.

   c. Installer may provide a DSA or OSHPD approved system such as the SMACNA Seismic Restraint Manual with Addendum No. 1, the Mason Industries Seismic Restraint Guidelines or other proprietary pre-approved system.

7. For ductwork and other mechanical equipment restraints, comply with SMACNA Seismic Restraint Manual: Guidelines for Seismic Mechanical Systems and obtain approval by DSA.

1.03 SUBMITTALS

A. Provide in accordance with Division 01.

1. Catalog cuts and data sheets on specific vibration isolators, seismic restraints, and anchors demonstrating compliance with the Specifications.

2. Shop Drawings for each piece of equipment including dimensions, structural member size, support point, vibration, and seismic restraints.

3. Written approval of frame design to be furnished by the equipment manufacturer.

4. Drawings indicating methods for suspension, support, seismic restraints, guides, etc., for piping, ductwork, etcetera.

5. Drawings indicating methods for isolation of pipes, ducts etcetera, piercing slabs, beams, etcetera.

B. Vibration Test Reports: At completion of installation, submit the following documents. Submission of these documents must be complete before final acceptance of vibration isolation systems is given. Assistance from the vibration isolation equipment Manufacturer may be required.

1. Complete tabulation showing for each vibration isolator:

a. Actual static deflection measured at the project.

b. Specified minimum static deflection.

2. Report certifying:

a. Each piece of operative rotating mechanical equipment does not exceed the specified vibration displacement level.

b. Each piece of isolated equipment or equipment component (ducts, pipes, conduit, etcetera) is not short-circuited by any means.

c. Requirements of Part 2 are satisfied for equipment.

1.04 QUALITY ASSURANCE

A. Standards and Codes: Comply with applicable codes and standards having jurisdiction including, but not limited to:

1. NFPA, Pamphlet 13.

2. ASHRAE Handbook: HVAC Systems and Equipment.

3. SMACNA Seismic Restraint Manual: Guidelines for Mechanical Systems.

4. California Building Code.

5. VISCMA

a. Installing Seismic Restraints for Mechanical Equipment.

b. Installing Seismic Restraints for Duct and Pipe.

B. Qualifications of Manufacturer and Installers: Comply with provisions as set forth in Section 23 0500: Common Work Results for HVAC.

PART 2 – PRODUCTS

2.01 GENERAL

A. Furnish and install vibration dampers, sound isolation pads, flexible connections and similar equipment required to prevent sound of water flowing in pipes, vibration of motors, and motor operated equipment from being transmitted to building structure; and, in case of fans, from being transmitted along ducts. Piping shall be isolated from vibrating equipment by furnishing required flexible connectors.

B. Pumps and similar motor operated equipment shall be installed on anti-vibration units.

C. Fans, except curb-mounted roof-type exhaust fans and wall mounted propeller fans, shall be installed with anti-vibration units, whether indicated on Drawings or not. Fans built into air handling units may be furnished with independent anti-vibration mountings or whole unit may be installed on an external vibration isolation system.

D. Other equipment shall be installed on anti-vibration bases, pads, or hangers, unless specifically noted otherwise on Drawings. Package units, furnished with built in anti-vibration bases, do not require unit bases unless otherwise specified.

1. Unless specified otherwise, anti-vibration bases shall be Mason Industries, M.W. Sausse & Co., the VMC Group, or equal, of the Model Number specified or indicated on the drawings. Furnished base including sub-base, shall be manufactured by same company with fan and integral motor base. Seismic restraints may be incorporated into bases or furnished separately.

2. Inertia anti-vibration bases shall conform to requirements indicated.

3. Unless noted otherwise, furnished anti-vibration bases, including supporting units for inertia bases, shall be of the spring type.

4. Selection of bases or supporting units shall be in accordance with manufacturer's recommendations based on following installed minimum effective isolation efficiencies (where not provided with each piece of equipment):

a.	Centrifugal fans, packaged fan and coil units and cooling towers, less than 800 RPM	80 percent
b.	Centrifugal fans over 800 RPM	90 percent
c.	Centrifugal pumps	95 percent
d.	Reciprocating compressors	95 percent

E. Flexible duct connections shall be provided at inlet and outlets of each fan or HVAC unit, except curb-mounted roof exhaust fans whether indicated on the drawings or not.

F. Flexible pipe or conduit connections shall be provided at piping and conduit connections to HVAC units, pumps, compressors and other moving (reciprocating or rotating) mechanical or electrical equipment provided under this Section whether indicated on the drawings or not.

G. Flexible connections for Freon piping shall be seamless flexible metal hoses of type and length recommended by manufacturer and suitable for system operating pressure.

H. Flexible connections for all other piping shall be flexible metal hose or spool type with flanged ends, unless otherwise specified. Metal hose shall be covered with protective braiding in areas where physical abrasion may occur, or for personnel safety.

I. Spool types shall be similar to American Rubber Co., Mercer Rubber Co., PROCO Products, Inc., or equal, and hose types shall be similar to DME, Inc., U.S. Flex, Pennflex, Anaconda Flexpipe, Keflex, or equal with any required modifications to meet specified requirements. Flanges shall be furnished with steel retaining rings. Units installed on discharge side of pumps shall be furnished for a suitable working pressure of not less than 100 psig, and those on suction side for working pressures of 50 psig or 30 inches Hg vacuum.

J. Units installed in cold water lines (less than 125 degrees F) shall furnish a minimum temperature rating of 180 degrees F and those installed in hot water lines (above 125 degrees F) shall be constructed of special heat resistant materials and be furnished for a minimum temperature rating of 220 degrees F, continuous operation. Units shall be able to withstand a maximum lateral deflection of 3/8 inch. Temperature and pressure ratings shall be molded into body of each spool unit so they are easily identified. Spool types shall be for straight in flow only.

K. Spool type units shall be furnished with control units comprised of a minimum of two tie-rods and anchor plates or internal guide sleeves to prevent excessive elongation or misalignment. Rubber washers shall be provided under bolt heads and rubber grommets in bolt holes to prevent any metal to metal contact between bolts and flanges.

L. Where hose type units are furnished, restraining anchors or braces shall be provided if excessive or undesirable pipe movement occurs when system is operated.

2.02 GENERAL PROPERTIES OF VIBRATION ISOLATORS.

A. Shall be provided with markings so that, after adjustment, when carrying their load, deflection under load can be verified; thus determining that load is within proper range of device and that correct degree of vibration isolation is being provided according to the design.

B. Isolators to operate in direct proportion to their load versus deflection curve. Load versus deflection curves shall be furnished by manufacturer and must be linear over a deflection range of 50 percent above design deflection.

C. Wave motion through isolator shall be reduced to following extent: Isolation above resonant frequency shall follow theoretical prediction based upon an un-dampened single degree of freedom system with a minimum isolation of 50 decibels above 150 cycles per second.

D. Vibration isolator spring diameters shall be no less than their deflected height. Furnish spring with a 50 percent overload safety factor.

E. Unless otherwise indicated, equipment installed on vibration bases shall provide a minimum operating clearance of one inch between structural steel base and floor or support base. Provide flexible connectors in piping and flexible conduit in power wiring to minimize transmission of vibration.

F. Isolators and springs exposed to weather shall be hot-dipped galvanized or powder coated after fabrication and before installation. Hot-dipped zinc coating shall be not less than two ounces per square foot by weight complying with ASTM A123. In addition, provide limit stops to resist wind velocity.

G. Where indicated, provide structural steel bases with height saving brackets, and minimum of three points of support. Isolators shall be furnished with a method for leveling.

H. Design isolators and seismic restraints for positive anchorage against uplift and overturning.

I. Provide and install, under this Section of the Specifications, structural steel required to properly support equipment and steel required to support horizontal thrust arrestors.

2.03 ISOLATOR TYPES

A. Type A: Steel Spring Isolators: Un-housed steel spring isolators, laterally stable and unrestrained. Design springs so that ratio of horizontal to vertical spring (stiffness) constant is between 0.9 and 1.3. Natural frequency of isolator must be 1/3 to 1/4 of driving frequency that is to be controlled. Isolators to provide a minimum additional travel to solid equal to 50 percent of rated deflection. Isolators shall be furnished with built-in leveling bolts complete with sound isolation pads type B. Static deflection as specified.

B. Type B: Sound Isolation Pad: Provide under each spring isolator a sound isolation pad, utilizing high quality durable neoprene pad material, loaded to 40 psi. Build sound pad up to 2 layers of 1/4 inch thick neoprene material; separate layers with a 16 gage galvanized sheet metal plate. Top layer shall provide a hardness of 40 durometers and the bottom layer shall be 40 durometers. Cold bond sound pads together and to isolator baseplate.

C. Type C: Neoprene-in-Shear Isolators: Isolator shall be neoprene-in-shear type as recommended by manufacturer. Isolator shall provide a static deflection under rated load at 1/4 inch.

2.04 EQUIPMENT FRAMES

A. Provide mounting frames and brackets to carry load of equipment without causing mechanical distortion or stress to the equipment.

B. Type A Frame: Wide flange members, rigidized structural steel frame with brackets. Maximum allowable deflection at any point on load frame relative to unloaded frame shall be 0.005 inch. Members to be constructed of wide flange beams, with a depth of not less than 1/10 of length of span between isolators. Frame shall be M.W. Sausse & Co. type RMSB-W, as basis of design, or Mason Industries, Caldyn, or equal.

C. Type B Frame: Channel members, rigidized structural steel frame with brackets. Frame to be constructed of channel steel with section depth equal to 1/10th length of longest structural member. Frame shall be M.W. Sausse & Co. type RMSB-C, as basis of design, or Mason Industries, Caldyn, or equal.

D. Type C Frame: Steel gusset or bracket welded or bolted directly to machine frame in order to accommodate isolator. Frame shall be M.W. Sausse & Co. type RMSG, as basis of design, or Mason Industries, Caldyn, or equal.

E. Type D Frame: Fabricated of rectangular channel steel forms for floating foundations to be filled with concrete on the Project site. Channel depth to be a minimum of 1/12th of longest dimension, but in no case less than 6 inches. Form shall include 1/2 inch reinforcing bars installed each way in a layer 1 ½ inches above bottom and drilled steel members with sleeves mounted below holes to receive equipment anchor bolts. Weight of concrete and frame shall be two times or more than the weight of the unit it supports. Frame shall be M.W. Sausse & Co. type RMSBI, as basis of design, or Mason Industries, Caldyn, or equal.

2.05 MATERIALS AND CONSTRUCTION

A. Duct Silencers: Provide factory fabricated duct silencers of tubular or rectangular type, for low or medium velocity service, with arrangements, sizes, and capacities as indicated on the Drawings.

1. Construction:

a. Fabricate silencers of galvanized steel with casing seams sealed or welded to be airtight at a pressure differential of 8 inches water gage between inside and outside of unit, and stiffen or brace as necessary to prevent structural failure or deformation at same condition, or audible vibration during normal operation. Outer casings of rectangular silencer modules shall be made of 22 gage galvanized steel in accordance with ASHRAE Guide of recommended construction for high-pressure rectangular ductwork. Seams shall be lock formed and mastic filled. Outer casings of tubular silencers shall be made of galvanized steel in 18 to 22 gage. Internal acoustic elements of rectangular silencers shall incorporate integral die formed entry and exit to minimize pressure drop and self-noise. Interior partitions for rectangular silencers shall be fabricated of not less than 26 gage galvanized perforated steel. Interior construction of tubular silencers shall be compatible with the outside casings.

b. Filler material shall comply with the following:

1) Fire Safety Standards: NFPA 90A and NFPA 90B.

2) Temperature: ASTM C411.

3) Air velocity: ASTM C1071, UL 181.

4) Fire Hazard Classification: ASTM E84, UL 723-Class 1, NFPA 255.

5) Corrosion Resistance: ASTM C739, C665.

6) Fungi Resistance: ASTM G21.

7) Water Vapor Sorption: ASTM C1104, less than 1 percent by weight.

8) Formaldehyde, Phenolic Resins or other Volatile Organic Compounds: 0 percent.

c. Airtight construction shall be provided by furnishing a duct sealing compound installed on the Project site. Silencers shall not fail structurally when subjected to a differential air pressure of 8 inches w.g. inside to outside of casing.

2. Acoustic Performance: Silencer ratings shall be determined in a duct-to-reverberant room test facility, which provides for airflow in both directions through the test silencer in accordance with ASTM Standard E477. The test facility shall be accredited by the National Voluntary Laboratory Accredited Program for the ASTM E477 test standard. Data from a non-accredited laboratory is not permitted. The test set-up and procedure shall eliminate effects due to end reflection, directivity, flanking transmission, standing waves, and test chamber sound absorption. Acoustic ratings shall include dynamic insertion loss (DIL) and self-noise (SN) power levels both for forward flow (air and noise in same direction) and reverse flow (air and noise in opposite directions). Data shall be for test silencers no smaller than the following cross-sections:

Rectangular, inches - 24 by 24, 24 by 30, or 24 by 36
Tubular, inches - 12, 24, 36, and 48

a. Noise reduction values (dynamic insertion loss) in decibels reference 10-12 watts, shall not be less than (of the model, size and length) indicated on Drawings.

b. Self generated noise in decibels reference 10 to 12 watts, shall not be more than of the model, size and length indicated on Drawings.

3. Aerodynamic performance: Airflow measurements shall be performed in accordance with ASTM specification E477 and applicable portions of ASME, Air Movement and Control Association (AMCA), and Air Diffusion Council (ADC) airflow test codes. Tests shall be reported on the identical units for which acoustic data is presented. Air pressure drops shall not exceed those (of the model, size and length) indicated on Drawings.

4. Certification: With submittals, provide certified test data on dynamic insertion loss, self-noise power levels, and aerodynamic performance for reverse and forward flow test conditions. Test data shall be for a standard product. Rating tests shall be conducted in the same facility, shall utilize the same silencer, and shall be open to inspection if required by the Architect.

5. Rectangular silencers shall be Industrial Acoustics Company of the model number indicated on the drawing, as basis of design, or Vibro-Acoustics, Dynasonics, SEMCO Silentair, TranSonics, Inc., or equal.

B. Duct Liner: As indicated in Section 23 0700: HVAC Insulation.

C. Flexible Ducts: As indicated in Section 23 0700: HVAC Insulation.

PART 3 – EXECUTION

3.01 INSTALLATION

A. Provide isolators, flexible pipe connectors, flexible electrical conduit and flexible duct connectors at all moving mechanical system components to prevent transmission of vibration noise to any part of building whether indicated on the drawings or not.

B. Install isolators to suit imposed load and the vibration frequency to be absorbed. Isolator units shall furnish adequate strength and flexibility to exhibit proper resiliency under machine load and impact without permitting excessive movement when starting.

C. Where commercial vibration isolator and seismic restraint units are specified, furnish manufacturer's standard catalog products with printed loading ratings, or provide substantiating calculations.

D. Install vibration isolators and seismic restraints in accordance with manufacturer's printed installation instructions.

E. Where equipment is belt driven and motor is not installed on equipment, install motor and driven equipment on unitized support, and install entire support isolators. Unitized support to be provided with adjustable slide rails sized for motor weight and frequency. Support shall be Mason Industries type WF, M.W. Sausse & Co., type RMSF, Caldyn, or equal.

F. Do not install any equipment, piping, conduit, ductwork, etc., that makes rigid contact with building or its structural members, unless reviewed by the Architect.

1. Coordinate Work with other trades to avoid rigid contact with building.

2. Correct, before installation, any conflict with other Work that would result in solid contact to equipment or piping due to inadequate space.

3. Obtain inspection from the Project Inspector for concealed Work before enclosure.

4. Notify manufacturer before installation of vibration isolation devices so that manufacturer may instruct and demonstrate technique for proper installation.

G. The furnishing or installation of vibration isolators must not cause any change of position or alignment of equipment, ductwork, or piping, resulting in stresses in piping or ductwork, connections, or misalignment of shafts or bearings. Equipment, piping, and ductwork shall be maintained in a rigid position during installation. Load shall not be transferred to isolator until installation is complete and under full operational load.

H. Air Compressors, Water Chillers, Pumps, Boilers with Integral Combustion Fans and Miscellaneous Equipment, mounted on roof or raised floors: Install each unit with its motor on a vibration isolated base utilizing type B frames, except where a type D frame is indicated on Drawings. Install steel support frame furnished by equipment manufacturer,

utilizing equipment anchor bolt templates and isolator height saving brackets. Provide springs as specified for type “A” isolator; static deflection shall be a minimum of 2 inches.

I. Fans (2000 rpm or higher) Air Compressors and Miscellaneous Equipment, mounted on grade: As specified for grade mounted boilers except furnish type C isolators.

J. Air Handling, Air Conditioning Units, Floor Mounted Fans, and Cabinet-Installed Fans: Install entire casing including filters, mixing box, fan section, coil sections, etc., on a continuous, integral, structural steel base, as indicated. Furnish type A, B, or C frames, reinforced as necessary to prevent distortion of frame. Furnish isolator type A; static deflection shall be a minimum of l ½ inches.

K. Suspended Fans and Air Conditioning Unit Fan Coils and Unit Ventilators: Suspend each integral unit from overhead structure on steel spring and elastomer hanger isolators. Support deflection under rated load of 3/8 inch. Provide spring static deflection as follows:

Fan RPM	**Min. Deflection**
200 – 400	3 inches
400 – 700	2 inches
Above 700	1 inches

L. Pipe Isolation: Where indicated and as required, furnish and support each pipe from an isolator. Isolator for the first five support locations away from vibrating equipment shall have the same deflection as the equipment isolators. After that, isolators shall be a neoprene-in-shear type of size as recommended by manufacturer; except where indicated on Drawings, pipe hanger rod shall be furnished with a steel spring isolator and elastomeric element, with lower rod capable of 30 degrees total misalignment without contact on spring housing.

M. Seismic Restraints: Floor or pad mounted equipment that do not require vibration isolators, shall be bolted to floor or other support. Floor mounted equipment with vibration isolators shall be provided with lateral and vertical restraining devices on all sides of base to restrict displacement of equipment. On all sides of suspended equipment, provide bracing for rigid supports and provide aircraft cable restraints for resiliently supported equipment.

N. Ductwork, duct acoustical lining, manual volume dampers and flexible ducts: Do not reduce length of duct runs, duct acoustical lining, manual volume dampers and flexible ducts for economy.

O. Installation of flexible ducts at air inlets and outlets: Do not attach flexible ducts directly to air inlets and outlets unless a straight, smooth and uniform air flow can be achieved with sufficient space to make an elbow with a radius of at least three times the diameter of the duct. If sufficient space is not available to make such an elbow, provide a rigid elbow or a lined plenum.

P. Placement of Air Devices: Do not relocate air devices without the Architect’s approval.

3.02 EXAMINATION

A. Arrange for the services of a certified representative of isolation manufacturer to visit the Project site for inspecting installation of devices. In the event the isolators do not meet specified requirements perform necessary revisions. Submit a written report to the

Architect, signed by above representative, indicating all devices are properly installed and are operating as specified or required by isolation manufacturer.

END OF SECTION

SECTION 23 05 53

HVAC IDENTIFICATION

PART 1 – GENERAL

1.01 SUMMARY

A. Section Includes: Marking and identification required on mechanical piping systems, ducts, controls, valves, apparatus, etc.

B. Related Requirements:

1. Division 01: General Requirements.

2. Section 23 0513: Basic HVAC Materials and Methods.

3. Section 23 0900: HVAC Instrumentation and Controls.

4. Section 23 3000: Air Distribution.

5. Section 23 8000: Heating, Ventilating and Air Conditioning Equipment.

1.02 SUBMITTALS

A. Submit in accordance with Division 01 and Section 23 0500: Common Work Results for HVAC.

B. Submit product data and installation instructions for each item specified.

C. Submit Samples of materials.

1.03 QUALITY ASSURANCE

A. Comply with provisions of:

1. Section 23 0500: Common Work Results for HVAC.

2. ANSI/ASME A13.1: Scheme for the Identification of Piping Systems.

3. APWA: Uniform Color Code.

Or

4. IAPMO: Uniform Plumbing Code (UPC).

PART 2 – PRODUCTS

2.01 MATERIALS

A. General: Piping systems, controls, valves, apparatus, etc., except those that are installed in inaccessible locations in partitions, walls, and floors, shall be permanently identified.

2.02 VALVES

A. Furnish prepared chart or diagram for each piping system, indicating by identifying letter or model number of each valve in the system, its location, and function.

B. Install charts in aluminum frame with clear glass front and secure on wall where designated by the Project Inspector.

C. Bind copies of each chart in operating instructions manual.

D. Provide each valve with a brass, aluminum, or plastic disc, not less than 1-1/4 inches diameter bearing engraved numbers corresponding to those indicated on chart. Fasten discs to valve with No. 14 brass wire.

E. Provide an additional tag for safety valves and other valves that could be hazardous to safety and health of occupants. Distinguish these tags from regular valve tags by color (such as yellow with black letters, and marked "Danger"); submit Sample tag to the Architect for review.

2.03 INSTRUMENTS AND CONTROLS

A. Identify panel-mounted instruments and controls with engraved bakelite nameplates permanently affixed to panel boards.

B. Identify alarm indicating devices and alarm reset devices by nameplates.

C. Identify damper motors and automatic valves, flow switches, pressure switches, etc., with embossed aluminum or plastic tape affixed to controller, indicating service and setting.

2.04 EQUIPMENT

A. Identify each major piece of equipment with engraved bakelite nameplates permanently affixed to the equipment, indicating the room numbers it services, Equipment identification designation shall be the same to its designation indicated on the “As-Built Drawings”. Room numbers in the nameplates shall correspond to the final room numbers.

2.05 ABOVE GRADE PIPE IDENTIFICATION

A. Identify pipes by means of colored labels with directional flow arrows and identification of the pipe content, in conformance to ANSI/ASME A13.1 or the UPC.

B. Materials: Precoiled acrylic plastic with clear polyester coating, all-temperature, self-adhering, as manufactured by Brady, Brimar Industries, Seton, Stranco, Inc., or equal.

C. Size:

Outside Diameter of Pipe or Insulation	**Length of Color Field**	**Size of Letter**
¾ to 1 ¼-inch	8-inch	½-inch

1 ½ to 2-inch	8-inch	¾-inch
2 ½ to 6-inch	12-inch	1 ¼-inch”
8 to 10-inch	24-inch	2 ½-inch”
over 10-inch	32-inch	3 ½-inch

D. Colors: As indicated in schedule.

E. Locations:

1. On accessible piping, whether insulated or not (including mechanical rooms, attic and ceiling spaces); except that labels shall be omitted from piping where contained material is obvious due to its connection to fixtures (such as faucets, water closets, etc.).

2. Near each valve and branch connection in such accessible piping.

3. At each pipe passage through wall or floor.

4. At not more than 20 feet spacing on straight pipe run between bands required in 2 and 3 above.

5. At each change in direction.

F. Application: Install on clean surfaces free of dust, grease, oil, or any material that will prevent proper adhesion. Replace non-adhering or curling labels with new labels, as required by the Project Inspector.

G. Schedule:

Content of Pipe	**Legend**	**Background Color**	**Lettering Color**
Steam	Steam	Yellow	Black
Steam condensate	Stm. Cond.	Yellow	Black
Chilled water supply	Chill water supply	Green	White
Chilled water return	Chill water return	Green	White
Instrument air	Inst. Air	Green	White
Heating hot water supply	Heating hot water supply	Yellow	Black
Heating hot water return	Heating hot water return	Yellow	Black
Air conditioning condensation drain	A/C condensate	Green	White

	drain		

2.06 UNDERGROUND PIPE

A. Detectable Marking Tape:

1. Provide and install detectable marking tape along buried piping. Tape shall be specifically manufactured for marking and locating underground utilities with electronic equipment. Tape shall be acid and alkali resistant, and manufactured with integral wires or foil backing, encased with protective cladding. Tape shall be a minimum of two inches in width.

2. Manufacturer: Reef Industries, Inc., Advantage Brands, Inc., Northtown Company, Mutual Industries, Inc., or equal.

3. Detectable marking tape shall be color-coded per APWA Color Code:

a. Yellow: Steam.

b. Blue: Water.

c. Red: Electric power lines, cables, conduit and lighting cables. By Division 26.

d. Orange: Communication, alarm or signal cables. By Divisions 26 and 27.

B. Tracer Wire:

1. Solid copper wire type THWN, 12 AWG gage, with heat and moisture resistant insulation.

2.07 IDENTIFICATION OF AIR CONDITIONING EQUIPMENT

A. Provide identification markers to locate air conditioning equipment above T-bar ceilings. Install 3/4 inch to one inch diameter colored self-adhesive dots to T-bar ceiling grid indicating point of access. The following identification markers shall be recorded on the project record documents:

1. Fire Damper and Combination Fire/Smoke Fire Damper: Red.

2. Manual Volume Dampers, Relief Dampers, Motorized Volume Dampers: Blue.

a. Supply air: Full dot.

b. Return air: Half dot.

3. Fan coil unit: Green.

4. Filter Location if separate from fan coil: Yellow.

PART 3 – EXECUTION

3.01 INSTALLATION

A. Correct detrimental conditions prior to commencing the Work of this Section. Install markers and identification tags as specified with materials and installation procedures recommended by manufacturer.

B. Place tracer wire on top of non-metal utility lines allowing some slack. Do not wrap tracer wire around pipe. Fasten tracer wire in place at approximately 10 feet on centers with non-metal ties.

C. Install underground detectable pipe marking tape continuously buried 8 to 10 inches above the buried utility pipe. Wrap tape on pipe risers up to a height of 12 inches above grade.

3.02 CLEANUP

A. Remove rubbish, debris, and waste materials and legally dispose of off the Project site.

END OF SECTION

SECTION 23 05 93

TESTING, ADJUSTING, AND BALANCING FOR HVAC

PART 1 – GENERAL

1.01 SUMMARY

A. SECTION INCLUDES

1. This Section specifies the requirements for test and balance of HVAC and related systems.

B. RELATED REQUIREMENTS

1. Section 01 1100: Summary of Work.

2. Section 01 3113: Project Coordination.

3. Section 01 3213: Construction Schedule.

4. Section 01 3300: Submittal Procedures.

5. Section 01 7700: Contract Closeout.

6. Section 23 0500: Common Work Results for HVAC.

7. Section 23 0513: Basic HVAC Materials and Methods.

8. Section 23 0548: HVAC Sound, Vibration and Seismic Control.

9. Section 23 0900: HVAC Instrumentation and Controls.

10. Section 23 0923: Environmental Control and Energy Management Systems (Only include when DDC Energy Management and Control Systems are provided).

11. Section 23 3000: Air Distribution.

12. Section 23 8000: Heating, Ventilating and Air Conditioning Equipment.

PART 2 – PRODUCTS (Not used)

PART 3 – EXECUTION

3.01 DEFINITIONS AND APPLICABLE PUBLICATIONS

A. For the purposes of this Section definitions are as indicated in applicable publications of AABC, NEBB, TABB, ASHRAE, ANSI and SMACNA.

1. TAB: Testing, Adjusting and Balancing.

2. TABB: Testing, Adjusting and Balancing Bureau.

3. AABC: Associated Air Balance Council.

4. NEBB: National Environmental Balancing Bureau.

5. ASHRAE: American Society of Heating, Refrigerating and Air-Conditioning Engineers.

6. ANSI: American National Standards Institute.

7. SMACNA: Sheet Metal and Air Conditioning Contractors' National Association.

8. OAR: OWNER'S Authorized Representative

3.02 QUALITY ASSURANCE

A. The General Contractor shall contract directly with the test and balance agency. Tests performed by testing agencies contracted with the system's subcontractor will not be accepted. The qualifications of the agency shall comply with Article 3.02, Quality Assurance. The agency shall be responsible for furnishing labor, instruments, and tools required to test, adjust, and balance the heating, ventilating, and air conditioning (HVAC) systems and related plumbing systems, as described and/or as indicated in the Contract Documents.

B. CONTRACTOR shall obtain services of an independent, qualified testing agency acceptable to Architect to perform testing and balancing Work as specified and as follows:

1. Agency shall be currently certified by either the Associated Air Balance Council (AABC), the National Environmental Balancing Bureau (NEBB), or the Testing, Adjusting and Balancing Bureau (TABB). NEBB or TABB certification shall be for Air and Hydronic Testing, Adjusting and Balancing and Sound and Vibration Measurement.

2. Work shall be in accordance with the latest edition of the AABC, NEBB, or TABB National Standards. Where the requirements of the two standards are different, the more stringent requirements shall prevail. Also, if the Contract Documents impose a more stringent standard, then the Contract Documents shall prevail.

C. Performance Criteria: Work of this Section shall be performed in accordance with approved Testing, Adjusting, and Balancing agenda.

D. Test Equipment Criteria: Basic instrumentation requirements and accuracy/calibration required by Section Two of the AABC, Section II of the NEBB, or TABB Procedural Standards for Testing, Adjusting and Balancing of Environmental Systems.

E. Verification: The Test and Balance Agency shall recheck 10 percent (minimum 10) of the measurements listed in the report. The locations shall be selected by PROJECT INSPECTOR or OAR. The recheck will be witnessed by PROJECT INSPECTOR or OAR. If 20 percent of the measurements that are retested differ from the report and are also out of the specified range, an additional 10 percent will be tested. If 20 percent fall outside the specified range, the report will be considered invalid and all test and balance work shall be repeated.

F. Due to more stringent acoustical requirements in the educational environment, the Test and Balance Agency shall recheck the air systems where the sound level is higher than the specified requirements and demonstrate compliance with the methodology specified in this document with emphasis on fan speed adjustment and balancing for optimum acoustical performance. The recheck will be witnessed by PROJECT INSPECTOR or OAR. When there are multiple air systems, a system selected by PROJECT

INSPECTOR or OAR shall be rechecked. If this system is found to be not in compliance, a second system shall be checked. If the second system if also found to be not in compliance, the report will be considered invalid, and all test and balance work shall be repeated.

3.03 SUBMITTALS

A. Submit name of agency to perform the Work. Include in the submittal the certified qualifications of all persons responsible for supervising and performing actual Work of this Section. Agency shall submit a minimum of five commercial or industrial HVAC system TAB projects of similar type, size, and degree of difficulty completed within the last two years. Agency shall provide name and telephone number of contact person for each listed project.

B. Submit, for approval, 6 copies of the Agenda as indicated in Article 3.06 to test and balance all mechanical and relevant plumbing systems.

C. Preliminary Report: Review the Contract Documents, examine Work installations and submit a written report to ARCHITECT, PROJECT INSPECTOR and OAR indicating deficiencies in Work precluding proper testing and balancing of the Work.

D. Final TAB Report: Submit the final TAB report for review by ARCHITECT, PROJECT INSPECTOR, and OAR outlining the conditions and Work completed on each HVAC system. All outlets, devices, HVAC equipment, etc. shall be identified, along with a numbering system corresponding to report unit identification.

E. Submit an AABC “National Project Performance Guaranty” or “NEBB Quality Assurance Certification”, assuring the Project systems were tested, adjusted, and balanced in accordance with the Specifications and AABC, NEBB, or TABB National Standards.

F. CAD drawings: Submit single line, multi-color CAD drawings indicating outside return and supply air, volume control boxes, each outlet and inlet, room numbers, duct sizes at traverse locations, temperatures and pressures, systems balanced, components changed, and CONTRACTOR installed access points. In addition, drawings shall identify controls, equipment settings, including manual damper quadrant positions, manual valve indicators, fan speed control levers, and similar controls, and devices shall be marked on the drawings to show final settings. CAD files shall be submitted on CD-ROM upon final submittal of TAB report. Reports shall identify discrepancies between completed Work and the Contract Documents affecting the performance and longevity of the system.

3.04 GENERAL SCOPE OF WORK

A. The general scope of Work shall include but not be limited to the following:

1. Measure airflow rates of HVAC systems and make adjustments to achieve design airflow rates, tabulate results, and submit reports.

2. Measure water-flow rates of HVAC systems and make adjustments to achieve design water flow rates, tabulate results, and submit reports.

3. Measure flow velocities, temperatures, static pressures or head, rotational speed, and electrical power demand of fans, pumps, and other related HVAC system components, tabulate results, and submit reports.

4. Measure sound levels in each conditioned space, tabulate results, and submit reports.

5. Measure ambient sound levels of outdoor HVAC units and system components such as chillers and cooling towers, tabulate results, and submit reports.

6. Reports shall contain sufficient data for the system designer to evaluate system performance and solve installation problems such as system pressure profiles and pressure drops across system components

3.05 SPECIFIC SCOPE OF WORK

A. The specific scope of Work shall include the following HVAC system components as indicated on the Drawings:

1. Air Conditioning Units.

2. Heating and Ventilating Units.

3. Heating and Cooling Coils.

4. Supply, Return, Relief and Exhaust Fans.

5. Outside Air and Return Air Plenums.

6. Outside Air Intakes.

7. All Supply and Return Ductwork.

8. All associated Air Terminal Devices, i.e. Supply Diffusers, Return Registers, etc.

9. Exhaust Duct Systems.

3.06 TESTING, ADJUSTING, AND BALANCING AGENDA

A. Provide proposed materials, methods, procedures, forms, diagrams, and reports for test and balance Work.

B. Agenda to be completed by the test and balance agency and submitted to ARCHITECT, PROJECT INSPECTOR, and OAR for review and approval.

C. Agenda shall include one complete set of AABC, NEBB, or TABB publications listed in Sub-paragraph 3.02.B.2, applicable publications, or, in case of other test and balance agencies and or organizations, comparable publications to establish an approved, systematic, and uniform set of procedures.

D. Agenda shall also include the following detailed narrative procedures, system diagrams, and forms for test results:

1. Specific standard procedures required and proposed for each system of the Work.

2. Specified test forms for recording each procedure and for recording sound and vibration measurements.

3. Systems diagrams for each air, water, and steam system. Diagrams may be single line.

E. In addition to information recorded for standard AABC, NEBB, or TABB procedures, the following information is required:

1. Fan data.

2. System number, location, manufacturer, model, and serial number.

3. Fan wheel type and size.

4. Motor horse power, type, and rpm.

5. Sheave size, type, number of grooves, and open turns on Variable Pitch Sheave.

6. Number and size of belts, motor and fan shaft sizes, center-to-center of shafts in inches, and adjustment available motor data, including nameplate data, actual amps, rated, and actual motor rpm, volts, phase, hp, kW, starter heater size, and capacity.

7. Fan design airflow and service (supply, return, outdoor air or exhaust).

8. Fan static pressure, suction/discharge, static profile, and static control point.

F. The following traverse data is required:

1. Traverse location, size of duct (inside dimensions), and area of duct in square feet.

2. Column for each hole traversed/lines for each reading.

3. Barometric pressure.

4. Temperature/Static pressure in the duct.

5. Actual CFM corrected to SCFM.

6. Notes.

G. The following air distribution data is required:

1. Room identification.

2. Outlet or intake balance sequence number.

3. Size of outlet or inlet.

4. AK Factor.

5. Design and Actual FPM and CFM.

6. Notes.

H. The following DX coil data is required:

1. Air flow through the coil in CFM.

2. Dry and wet bulb temperatures entering/leaving coil.

3. Enthalpy or total heat difference across coil in BTU/ pound.

4. Capacity in BTU/hour at time of test.

5. Air pressure drop across coil.

6. Notes.

I. The following domestic water heater data is required:

1. Performance test results for rated capacity.

2. Boiler identification number.

3. Nameplate data; manufacturer, model, and serial number.

4. Water temperature entering/leaving the boiler.

5. Outside conditions: temperature, humidity, general cloud cover.

6. Barometric pressure.

J. The following air-cooled split system condensing unit data is required:

1. Performance test results for rated capacity.

2. Unit identification number.

3. Nameplate data, manufacturer, model, and serial number.

4. Compressor nameplate and actual amps, volts, phase, and hertz.

5. RPM of motors, where applicable.

6. Refrigerant type.

7. Suction/Discharge pressure when gage installed.

8. Number of stages.

9. Low-pressure/High-pressure control setting.

10. Condenser fan sequence stages.

11. Crankcase heater watts (nameplate).

12. Hot gas bypass installed - yes/no.

13. SCFM Air Flow Measurement vs. Design CFM.

K. The following air-cooled split system heat pump data is required:

1. Performance test results for rated heating and cooling capacities.

2. Unit identification number.

3. Nameplate data, manufacturer, model, and serial number.

4. Compressor nameplate and actual amps, volts, phase, and hertz.

5. RPM of motors, where applicable.

6. Refrigerant type.

7. Suction/Discharge pressure for both heating and cooling modes when gage installed.

8. Number of stages.

9. Low-pressure/High-pressure control setting.

10. Condenser fan sequence stages.

11. Crankcase heater watts (nameplate).

12. Hot gas bypass installed - yes/no.

13. SCFM Air Flow Measurement vs. Design CFM.

L. The following sound test data is required:

1. Area or location.

2. Sound level in dB(A) as specified in Article 3.19.

3. Sound level at the center band frequencies of eight non-weighted octaves with equipment on and off for 5 rooms selected by the OAR/PROJECT INSPECTOR.

4. Plot of corrected sound-level reading on Noise Criteria (NC) curve for the measurements in Q 3 above.

M. The following vibration test data is required:

1. Equipment identification number.

2. Vibration levels at all accessible bearings, motors, fans, pumps, casings, and isolators.

3. Measurements in mils defection and velocity in inches per second.

4. Each measurement taken in horizontal, vertical, and axial planes as accessible.

N. The following fan coil and unit ventilator data is required:

1. Equipment identification number.

2. Nameplate data; manufacturer, model, and serial number.

3. Tested supply CFM or manufacturer rated CFM if not ducted.

4. Tested outside air in CFM.

5. Motor data and actual amps and volts.

6. Cooling/Heating test data.

7. Static pressure.

8. Notes.

3.07 PROCEDURES

A. Schedule the Work of this Section in order for test and balance activities to be completed prior to the date of Substantial Completion. CONTRACTOR shall place all heating, ventilating, and air conditioning equipment into operation during each day and until all HVAC adjusting, balancing, testing, demonstrations, and instructions on systems are completed. Agency shall prepare and submit reports within ten (10) days from completion of the Work of this Section to allow sufficient time for corrective measures to be completed before Substantial Completion of the Work. When an individual building or portion thereof is ready for occupancy, all equipment relative to such portion of Work shall be put into service, tested, and balanced.

B. Prior to the date of Substantial Completion, and upon completion of test and balance Work, place all exhaust fans in operation, force all air handling units, and air conditioning units into a 100 percent outdoor air economizer mode with heating and cooling locked out and flush the building continuously for a period of fourteen (14) days.

C. Coordinate test and balance procedures with any phased Project requirements so test and balance procedures on each phased portion of the Work will be completed prior to completion of said designated phase.

3.08 FIELD EXAMINATION

A. Before the commencement of test and balance Work, CONTRACTOR shall ascertain that following conditions are fulfilled:

1. Ensure that all water heating and water cooling systems have been flushed, cleaned, and filled and high points vented.

2. Boilers (steam and hot water) are filled.

3. Refrigerant systems are fully charged with specified refrigerant.

4. Over-voltage and current protection have been provided for motors.

5. Equipment has been labeled as required.

6. Curves and descriptive data on each piece of equipment to be tested and adjusted are available as required.

7. Operations and maintenance manuals have been supplied.

8. Controls manufacturer and boiler-burner representatives shall be available for consultation and supervision of adjustments during tests.

9. Verify that heating and cooling coil fins are cleaned, combed and air filters clean, and installed.

10. Verify that duct systems are clean of debris and leakage is minimized, access doors are closed and duct end caps are in place, and fire and volume dampers are in place and open.

11. Automatic control systems are completed and operating.

12. Start up and initial commissioning of all HVAC equipment except fans shall be by the manufacturer.

B. In addition to the above, CONTRACTOR shall establish a specific, coordinated plan which details how each area of existing building will be balanced during the various phases of the Work. The evaluation shall address, at a minimum, the following concerns:

1. OWNER operations.

2. Building safety and security policies. Prior to any fire safety or security systems shutdown at any time during the Work, CONTRACTOR shall first advise and coordinate with OWNER to ensure all concerned parties are notified.

3. Protecting furniture, computers, photocopiers, and other office equipment.

4. Protecting classroom fixtures and equipment.

5. Concerns specific and unique to building related issues.

6. Downtime required for each Air Handling Unit including projected time to return each portion of the building back to its normal occupancy temperature and humidity.

7. Shutdown and reactivation of the fire alarm system to avoid accidental alarms during test and balance and related Work.

3.09 TEST AND BALANCE

A. For each heating, ventilating, or air conditioning system the following shall be performed, recorded, and submitted in an approved format for review. Make, type, and model of unit, and location of each piece of equipment shall be included in the report. Readings shall include but not be limited to following:

1. Air Systems**:**

a. General

1) Verify all ductwork, dampers, grilles, registers, and diffusers have been installed per design and set in the full open position. Agency shall perform the following TAB procedures in accordance with AABC or NEBB National Standards. Where the requirements of the two standards are different, the more stringent requirements shall prevail. Also, if the Contract Documents impose a more stringent standard then the Contract Documents shall prevail.

b. Zone, Branch, and Main Ducts:

1) Adjust ducts to within design CFM requirements by means of Pitot-tube duct traverse.

c. Supply Fans:

1) Fan Speeds: Test and adjust fan RPM to achieve maximum or design CFM. CONTRACTOR shall provide new belt pulleys when required.

2) Current and Voltage: Test and record motor voltage and amperage, and compare data with the nameplate limits. Ensure

fan motor is not in or above the service factor as published by the motor manufacturer.

3) Pitot-Tube Traverse: Perform a Pitot-tube traverse of main supply and return ducts, record total CFM.

4) Outside Air: Test and adjust the outside air using Pitot-tube traverse.

5) Static Pressure: Test and record system static profile of each supply fan.

6) Current and Voltage: Test and record motor voltage and amperage, and compare data with the nameplate limits. Ensure fan motor is not in or above the service factor as published by the motor manufacturer.

d. Return, Relief, and Exhaust Fans:

1) Fan Speeds: Test and adjust fan RPM to achieve maximum or design CFM. CONTRACTOR shall provide new belt pulleys where required.

2) Pitot-Tube Traverse: Perform a Pitot-tube traverse of the main return ducts to obtain total CFM.

3. Static Pressure: Test and record system static profile of each fan.

e. Diffusers, Registers and Grilles:

1) Tolerances: Test and balance each diffuser, grille, and register to within 5 percent of design requirements.

2) Identification: Identify the type, location, and size of each grille, diffuser, and register. This information shall be recorded on air outlet data sheets.

f. Coils: Air Temperature: Once airflow is set to acceptable limits, agency shall take wet bulb and dry bulb air temperatures on the entering and leaving side of each cooling coil. Dry-bulb temperature shall be taken on the entering and leaving side of each heating coil.

g. Duct Leakage Testing:

1) On existing ductwork, agency shall calculate duct leakage by traversing the unit and reading associated diffusers.

2) On new installations each and every section of the entire air distribution system (all supply, return, exhaust, and relief ductwork) shall be tested at 1.5 times design static pressure. All ducts shall demonstrate 5 percent leakage maximum (per CBC).

h. System Pressure Profiles:

1) Prepare pressure profiles from fan (supply, return, and exhaust) or air handling unit to extremities of system.

2) As a minimum, show pressure at each floor, main branch, and airflow measuring device.

3) Make pitot-tube traverses of all trunk lines and major branch lines where required for analysis of distribution system. Airflow measuring devices installed in ductwork, if available, may be utilized.

4) Record residual pressures at inlets of volume controlled terminals at ends of system.

5) Show actual pressures at all static pressure control points utilized for constant or variable flow systems.

i. Fan speed adjustments and balancing for optimum acoustical performance:

1) As the very first step, the speed of all fans (supply, return, and exhaust inside packaged equipment) shall be adjusted to deliver the required fan total air quantity with all volume dampers and other flow rate control devices fully open. Adjustments shall be made with the outdoor air intake dampers, return air dampers, and relief air dampers in the minimum outdoor air position. The adjustments shall be made again in the 100 percent outdoor air position in systems with 100 percent outdoor air economizers.

2) The above adjustment shall be done with wet cooling coils, where cooling coils are provided.

3) The airflow rates at each branch duct shall be adjusted as the second step with air with all volume dampers and other flow rate control devices fully open.

4) The airflow rates at each air inlet and outlet shall be adjusted as the final step. The volume damper in the branch duct shall be used for balancing. Opposed blade dampers at air inlets and outlets where provided shall only be used for fine adjustments and shall not be closed beyond 60 percent open or when the dampers start to generate audible noise.

5) CONTRACTOR shall provide the labor and materials for all dampers, pulleys, and belt changes required for balancing. The design documents indicate the worst-case scenario with safety factors in fan static pressures for contingency. Properly coordinated and installed air systems may require a lower static pressure and a reduction in fan speed.

B. Coils:

1. Tolerances: Test and balance all coils within 5 percent of design requirements.

2. Verify the type, location, final pressure drop, and GPM of each coil.

C. System Mains and Branches including domestic hot water and domestic cold water:

1. Balance water flow in pipes to achieve maximum or design GPM.

3.10 VERIFICATION OF HVAC CONTROLS

A. Agency shall verify in conjunction with CONTRACTOR all control components are installed in accordance with the intent of the Contract Documents and are functioning according to the design intent, including all electrical interlocks, damper sequences, air and water resets, fire stats, and other safety devices.

B. CONTRACTOR shall verify all control components are calibrated and set for design operating conditions and intent.

3.11 TEMPERATURE TESTING

A. To verify system control and operation, agency shall perform a series of three temperature tests taken at approximately two hour intervals in each separately controlled zone. The resulting temperatures shall not vary more than two degrees Fahrenheit from the thermostat or control set point during the tests. Outside temperature and humidity shall also be recorded during the testing periods.

3.12 KITCHEN HOOD TESTING

A. Agency shall test and adjust hood total airflow by duct Pitot-tube traverse. If a Pitot-tube traverse is not practical, an explanation of why a traverse was not made must be made in writing to Architect and subsequently appear on the appropriate data sheet. Face velocities shall be tested under design operating conditions using a maximum of a one square foot grid pattern across the entire open face. CONTRACTOR shall set sash height on hoods to obtain face velocities within 20 percent of 100 feet per minute unless specified otherwise. Agency shall test and adjust exhaust airflows and make-up air flows to maintain design hood pressures and face velocities and design room pressurization. Agency shall test for turbulence and proper air flow patterns at the face and inside the hoods using a hand-held smoke puffer or other approved smoke-emitting device.

3.13 BUILDING/ZONE PRESSURIZATION

A. Agency shall test and adjust building/zone pressurization by setting the design flows to meet the required flow direction and pressure differentials. Positive/Negative area(s) supply air shall be set to design flow and exhaust air rates adjusted to obtain the required pressure differential(s).

3.14 FIRE AND SMOKE DAMPER TESTING

(Not used)

3.15 LIFE SAFETY CONTROLS TESTING

A. This work is to be performed by OWNER and State Fire Marshall. Do not include in agency scope of Work.

3.16 FINAL TABULATION

A. After heating, ventilating, and air conditioning components are satisfactorily tested and balanced, entire system shall be put into operation and all pressures, temperatures, gpm, cfm, velocities, etc., shall be recorded and checked against design schedules. Design requirements shall be listed on reports and final tabulation shall be within a tolerance of plus or minus five percent of design requirements.

B. Readings at various locations as described herein will be made every hour for four (4) hours, during normal working hours for three (3) days. Boilers, forced air furnaces, and chillers shall be started up far enough in advance to meet design conditions during period of testing.

3.17 VIBRATION TESTING

A. Furnish instruments and perform vibration measurements if specified in Division 23. Provide measurements for all rotating HVAC equipment half horsepower and larger, including reciprocating/centrifugal/screw/scroll compressors, pumps, fans, and motors.

B. Record initial and final measurements for each unit of equipment on test forms. Where vibration readings exceed allowable tolerance and efforts to make corrections have proved unsuccessful, forward a separate report to ARCHITECT.

3.18 SOUND TESTING

A. Perform and record sound measurements as specified in this Section and in Section 23 0548: HVAC Sound, Vibration and Seismic Control. Take additional readings if required by ARCHITECT.

B. Measuring equipment and methods shall comply with the current requirements of the AABC, NEBB, TABB and ANSI S12.60. Take measurements with a calibrated Type 1 sound level meter and octave band analyzer.

C. Sound reference levels, formulae, and coefficients shall be according to ASHRAE Handbook: HVAC Applications, Chapter on Sound and Vibration Control.

D. Where sound pressure levels are specified as noise criteria or room criteria in Section 23 0548: HVAC Sound, Vibration and Seismic Control determine compliance with the Contract Documents as follows:

1. Reduce background noise as much as possible by shutting off unrelated audible equipment.

2. Measure octave band sound pressure levels with specified equipment "off".

3. Measure octave band sound pressure levels with specified equipment "on".

4. Use difference in corresponding readings to determine sound pressure due to equipment. Sound pressure level, due to equipment equals sound pressure level with equipment "on" minus factor.

DIFF.:	0	1	2	3	4	5	9-10 or More
FACTOR:	10	7	4	3	2	1	0

5. Plot octave bands of sound pressure level due to equipment for typical rooms, on a graph, which also shows, noise criteria (NC) curves.

E. Where sound levels are required in dbA, measure sound levels using the A-frequency-weighting of meter. Single value readings will be used instead of octave band analysis.

F. Measure sound levels at each octave band as NC or RC (room criteria) if indicated in the Drawings or other Spec Sections. Where measured sound levels exceed specified level, CONTRACTOR shall take all remedial action and necessary sound tests shall be repeated. Sound tests after remedial action shall be in octave band in NC or RC for the room and also at each diffuser, grille, or register in occupied areas. Sound levels shall be measured

approximately five feet above floor on a line approximately 45 degrees to center of opening, on the A- and C-frequency-weighting of the measuring instrument.

G. Measure and record sound levels in decibels for each room per current ANSI S12.60.

H. Report shall include ambient sound levels, taken without air-handling equipment operating, of rooms in which above openings are located. A report shall also be made of any noise caused by mechanical vibration.

END OF SECTION

SECTION 23 07 00

HVAC INSULATION

PART 1 – GENERAL

1.01 SUMMARY

A. Section Includes:

1. Condensate drain piping from air conditioning equipment.

2. Refrigerant piping.

3. Supply and return air ducts for heating and cooling systems air ducts.

B. Related Requirements:

1. Division 01: General Requirements.

2. Section 23 0500: Common Work Results for HVAC.

3. Section 23 0513: Basic HVAC Materials and Methods.

4. Section 23 0553: Mechanical Identification.

5. Section 23 3000: Air Distribution.

6. Section 23 8000: Heating, Ventilating and Air Conditioning Equipment.

1.02 REFERENCES

A. American Society for Testing and Materials International (ASTM):

1. ASTM C167 - Standard Test Methods for Thickness and Density of Blanket or Batt Thermal Insulations.

2. ASTM C302 - Standard Test Method for Density and Dimensions of Preformed Pipe-Covering-Type Thermal Insulation.

3. ASTM C411 - Standard Test Method for Hot-Surface Performance of High-Temperature Thermal Insulation.

4. ASTM C423 - Standard Test Method for Sound Absorption and Sound Absorption Coefficients by the Reverberation Room Method.

5. ASTM C533 - Standard Specification for Calcium Silicate Block and Pipe Thermal Insulation.

6. ASTM C534 - Standard Specification for Preformed Flexible Elastomeric Cellular Thermal Insulation in Sheet and Tubular Form.

7. ASTM C547 - Standard Specification for Mineral Fiber Pipe Insulation.

8. ASTM C665 - Standard Specification for Mineral-Fiber Blanket Thermal Insulation for Light Frame Construction and Manufactured Housing.

9. ASTM C739 - Standard Specification for Cellulosic Fiber Loose-Fill Thermal Insulation.

10. ASTM C1071 - Standard Specification for Fibrous Glass Duct Lining Insulation (Thermal and Sound Absorbing Material).

11. ASTM C1104 - Standard Test Method for Determining the Water Vapor Sorption of Unfaced Mineral Fiber Insulation.

12. ASTM E84 - Standard Test Method for Surface Burning Characteristics of Building Materials.

13. ASTM E795 - Standard Practices for Mounting Test Specimens During Sound Absorption Tests.

14. ASTM G21 - Standard Practice for Determining Resistance of Synthetic Polymeric Materials to Fungi.

B. Underwriters Laboratories Inc.:

1. UL 181 - Standard for Factory-Made Air Ducts and Air Connectors.

2. UL 723 - Standard for Test for Surface Burning Characteristics of Building Materials.

C. National Fire Protection Association:

1. NFPA 90A - Standard for the Installation of Air-Conditioning and Ventilating Systems .

2. NFPA 90B - Standard for the Installation of Warm Air Heating and Air-Conditioning Systems.

3. NFPA 255 - Standard Method of Test of Surface Burning Characteristics of Building Materials.

1.03 SUBMITTALS

A. Submit in accordance with Division 01 and Section 23 0500: Common Work Results for HVAC.

1. Complete material list of items to be furnished and installed under this Section.

2. Manufacturer's specifications and other data required demonstrating compliance with the specified requirements.

3. Shop Drawings, catalog cuts and manufacturer's data indicating insulation, jacketing, adhesives, and coating. Insulating materials shall be certified by manufacturer to comply with the California quality standards for insulating materials.

4. Display sample cutaway sections.

5. Manufacturer's recommended method of installation procedures, which will become part of this Section.

1.04 QUALITY ASSURANCE

A. Qualifications of Manufacturer and Installer, Materials, Fabrication, Execution, and Standard of Quality: Comply with provisions stated under Section 23 0500: Common Work Results for HVAC and Section 23 0513: Basic HVAC Materials and Methods.

B. Insulation Work shall be in accordance with the California Building Energy Efficiency Standards, CBC, and Uniform Mechanical Code.

C. Test Ratings:

1. Comply with provisions stated under Section 23 0500 and 23 0513 with emphasis on ASTM E84, NFPA 255, or UL 723. ASTM C167, ASTM C302, UL label or listing of satisfactory test results from the National Institute of Standards and Technology, or a satisfactory certified test report from an acceptable testing laboratory. Approval by the State Fire Marshal is required.

2. Furnish labels, legibly printed with the name of the manufacturer or listings indicate that fire hazard ratings do not exceed those specified for materials proposed for installation. Flame spread index of not more than 25 and smoke developed rating not exceeding 50.

3. Tests shall be performed on each item individually when insulation, vapor barrier covering, wrapping materials, or adhesives are installed separately at the Project site.

4. Test insulation, vapor barrier covering, wrapping materials and adhesives as an assembly when they are factory composite systems.

D. Regulatory Requirements: Insulation furnished and installed under this Section shall meet minimum legal requirements of the Building Energy Efficiency Standards adopted and incorporated in the California Energy Commission, Title 24, Part 2, Chapters 2 through 53, unless otherwise noted, for the piping, ductwork, and equipment.

E. All chemically based products such as sealers, primers, fillers, adhesives, etc. must meet the California air quality regulations.

1.05 PRODUCT HANDLING

A. Protection, Replacement, Delivery and Storage: Comply with provisions stated under Sections 23 0500: Common Work Results for HVAC and 23 0513: Basic HVAC Materials and Methods.

PART 2 – PRODUCTS

2.01 MATERIALS

A. General:

1. Insulating material shall be fire resistant, non-corrosive, shall not break, settle, sag, pack or disintegrate under vibration, nor absorb more than 1 percent moisture by weight.

2. Insulating material shall be furnished with thickness indicated in Table 1, and shall furnish thermal resistance in the range of R-4.0 to 4.6 in accordance with inch at 75 degrees F. For any other value of R, insulation thickness shall be calculated accordingly and submitted for review.

3. Asbestos in any quantity in insulating material is not permitted.

4. Provide insulation materials, adhesives, coatings, sealants, fitting covers, and other accessories with a fire hazard rating not to exceed 25 for flame spread, 25 for fuel contributed and 50 for smoke developed, except for materials listed as follows:

   a. Nylon anchors for installing insulation to ducts or equipment.

   b. Treated wood blocks.

5. Flame-proofing treatments subject to moisture damage are not permitted.

TABLE 1 - MINIMUM PIPING INSULATION THICKNESS (1)

Insulation Thickness Required (in inches)
Space Heating Systems (Steam, Steam Condensate and Hot Water)

Piping System Type	**Temp. Range (degrees F)**	**Run-outs up to 2** (2)	**1 and less**	**1.25 to 2**	**2.5 to 4**	**5 to 6**	**8 and larger**
Hi Pres Temp	Above 350	1.5	2.5	2.5	3.0	3.5	3.5
Med Pres Temp	251 to 305	1.5	2.0	2.5	2.5	3.5	3.5
Low Pres Temp	201 to 250	1.0	1.5	1.5	2.0	2.0	3.5
Hot Water	Up to 200	0.5	1.5	1.5	1.5	1.5	1.5
Steam Cond.	-	0.5	1.0	1.0	1.0	1.5	1.5
Service Water Heating Systems (recirculating, piping supply and return)							
Hot Water	Up to 180	0.5	1.0	1.0	1.5	1.5	1.5
Space Cooling Systems (Chilled water, Brine and Refrigerant)							
Chilled Water	40-60	0.5	0.5	0.75	1.0	1.0	1.0
Refrigerant/Brine	Below 40	1.0	1.0	1.5	1.5	1.5	1.5
Condensate Drain	1/2 inch Minimum insulation thickness.	0.5	0.5	0.5	0.5	0.5	0.5
From Air Conditioning Equipment:	Insulate condensate drain lines within building, in room, inside walls and above ceilings.	0.5	0.5	0.5	0.5	0.5	0.5

NOTES: (1) For piping exposed to ambient temperatures, increase thickness by 0.5 inch.

(2) Run-outs to individual terminal units, not exceeding 12 feet in length.

B. Lagging Adhesives: Shall be nonflammable and fire-resistant and shall have a maximum flame spread index of 25 and a maximum smoke developed index of 50 when tested in accordance with ASTM E84. Insulation finished with canvas shall be provided with laps adhered in accordance to manufacturer's recommendation. A finish coat of same material

shall be applied to entire outer surface of lagging cloth at coverage specified by manufacturer.

C. Canvas Jackets: Furnish 6 ounce in accordance with square foot minimum, 48 by 48 thread count canvas jacketing.

D. Insulation Jackets:

1. Exterior insulation exposed to weather shall be weatherproofed with Childers aluminum jacketing as basis of design, or Pabco, RPR, or equal. Jacketing shall be manufactured from 1100, 3105 or 5010 aluminum alloy with 3/16 inch corrugations. Smooth or embossed jackets may be permitted in special situations to match an existing installation. Jacketing shall be furnished with an integrally bonded moisture barrier over entire surface in contact with insulation. A minimum thickness of 0.016 aluminum jacketing is to be provided on ducts and piping. A minimum thickness of 0.020 shall be provided on tanks, equipment, and heat exchangers.

2. Insulated elbows, of 90 degrees and 45 degrees, with a nominal iron pipe size of ½ inch to 8 inches shall be provided with Childers aluminum Ell-Jacs insulation covers as basis of design, or Pabco, RPR, or equal, manufactured from 1100 aluminum alloy of 0.024 inch thickness. Insulated elbows with a nominal pipe size of 10 inches to 18 inches shall be provided with Childers 4-piece aluminum Ell-Jacs as basis of design, or Pabco, RPR, or equal.

3. Tees, Flanges, and Valve Insulation in Conjunction with Aluminum Jacketing: Furnish Childers Aluminum Special Fabrications Insulation Covers as manufactured by Childers Products Company, Pabco, RPR, or equal.

E. Adhesives: Adhesives shall be water based, UL Classified, meet the requirements of NFPA 90A and NFPA 90B, have been tested according to relevant ASTM requirements, and be acceptable to the State Fire Marshal. Name, type and method of installation shall be submitted for review.

F. Valve and Fitting Cover: When installed in conjunction with PVC jacketing, furnish Zeston 25/50 rated polyvinyl chloride fitting covers as manufactured by Johns Manville, Knauf Insulation, Speedline, or equal.

2.02 SPACE HEATING PIPING SYSTEM

(Not Used)

2.03 COOLING PIPING SYSTEM INSULATION

A. General: Insulate refrigerant piping.

B. Materials:

1. Classes of Insulation:

a. Class A: Expanded polystyrene pipe insulation, self-extinguishing type, either molded or extruded; Dow Chemical Co. STYROFOAM, ITW Insulation Systems XPS PIB, Foam-Control EPS, or equal.

b. Class B: Glass fiber molded pipe insulation ASTM C547. Pipe insulation shall be one piece, preformed, and provide a minimum R factor of 4 at 75 degrees F mean temperature. Insulation shall be faced with all-purpose fire retardant vapor barrier jacket. Pipe insulation shall be Johns Manville

Micro-Lok, CertainTeed Snap-On, Owens Corning FIBERGLAS SSL II-ASJ, or equal.

c. Class C: Expanded (foamed) urethane (polyurethane) or polyisocyanurate pipe insulation of self-extinguishing type molded or fabricated, Dyplast Products, LLC ISO-C1/2.0, ITW Trymer, Specialty Products & Insulation Co. Polyisocyanurate Pipe Insulation, Armacell Armalok, or equal.

d. Class D: Foamed plastic pipe insulation, self-extinguishing type, ASTM C534 Type 1 - tubular. Pipe insulation shall be one-piece preformed, flexible tubing type and provide a maximum K factor of 0.28 at 75 degrees F mean temperature. Pipe insulation shall be Armacell Armaflex, Aeroflex Aerocel, Rubatex INSUL-TUBE 180, or equal.

2. Locations and Class of Insulation Required: For thickness required, refer to Table 1 of this Section.

TABLE 3 – SERVICE, LOCATION AND CLASS OF INSULATION REQUIRED

SERVICE	LOCATION	CLASS OF INSULATION
Condensate drains from air conditioning equipment	Indoors at all locations including above ceilings and between stud walls	D
Refrigerant suction Liquid line as required	All locations except underground	D
All other piping, except underground	All locations except underground	A, B, C

3. Adhesives:

a. Polystyrene adhesives: Synthetic rubber and resin adhesives specifically designed to adhere extruded and expanded rigid polystyrene and urethane insulation to themselves and to other porous and non-porous substrates.

b. Vapor barrier laps and penetrations: Furnish protective coating and lagging adhesive on butt joints of foil-faced vapor barriers, and where pins and staples puncture facings.

2.04 HIGH TEMPERATURE EQUIPMENT INSULATION

(Not Used)

2.05 LOW TEMPERATURE EQUIPMENT INSULATION

(Not Used)

2.06 DUCTWORK AND PLENUM INSULATION

A. General: Insulate ductwork and plenums with not less than the amount of insulation tabulated in Table 4. Insulation may be omitted under the following conditions:

1. Exposed return air ductwork in conditioned space.

2. Return air ductwork between wall studs inside an interior wall.

TABLE 4 - INSULATION OF DUCTS AND PLENUM

INSULATION TYPES

Duct Location	Heating and Cooling
On roof or exterior of building	L2
Attics, Garages, and Crawl Spaces	F-3 or L-2 See Note 3
In walls, within floor-ceiling spaces	F-1 or L-1 See Note 3
Hot and cold plenums	F-2 or L-2 See Note 3
Within unconditioned space or in basement	F-3 or L-2 See Note 3

B. Insulation Types:

1. F-1: 1 ½ inch blanket fiberglass, factory-laminated with all-service jacket vapor barrier.

2. F-2: 2 inch blanket fiberglass, factory-laminated with all-service jacket vapor barrier.

3. F-3: 3 inch blanket fiberglass, factory-laminated with all-service jacket vapor barrier.

4. L-1: 1 inch internal duct lining. Flexible type for ducts and rigid board for plenums.

5. L-2: 2 inch internal duct lining. Flexible type for ducts and rigid board for plenums. Duct joints shall be waterproofed.

C. Notes:

1. Minimum insulation provided shall be as required by the current California Administrative Code Title 24 for the most restrictive condition.

2. Refer to the materials indicated in this section for external insulation and internal lining.

3. External insulation shall be replaced with internal duct lining (of equivalent thermal resistance value unless noted otherwise) where indicated on the drawings or specified elsewhere for sound attenuation.

4. Provide internal duct lining (1 inch unless noted otherwise) where indicated on the drawings or specified elsewhere for sound attenuation.

D. Materials:

1. Fire-Resistive Insulation Materials and Coatings: Submit State Fire Marshal pre-approved materials only.

2. Adhesives: See Paragraph 2.01.E for applicable products.

3. External Insulation: Provide glass fiber blankets that are factory-laminated with Foil Reinforced Kraft (FRK) vapor barrier facing; Johns Manville Microlite, Owens-

Corning SOFTR Duct Wrap, Knauf Insulation Friendly Feel Duct Wrap, or equal. Provide a minimum installed R value as required by the CEC Building Energy Efficiency Standards; but not less than scheduled below:

TABLE 5

INSULATION OF DUCTS AND PLENUM INSTALLED

THERMAL RESISTANCE R VALUES

Type	Labeled Thickness	Installed R Value (hr.ft^2.°F/Btu)
F1	1 ½-inch”	4.2
F2	2-inch	5.6
F3	3-inch	8.3
L1	1-inch	4.2
L2	2-inch	8.3

4. Internal Lining: Acoustic duct liner and liner board, or equal; Johns Manville Permacote Linacoustic, Johns Manville Spiracoustic Plus, Owens Corning QuietR Rotary Duct Liner, or equal. Internal lining shall conform to:

   a. Fire Safety Standards: NFPA 90A and 90B.

   b. Operating Temperature: ASTM C411.

   c. Air velocity: ASTM C1071, UL 181.

   d. Fire Hazard Classification: ASTM E84, UL 723-Class 1, NFPA 255.

   e. Corrosion Resistance: ASTM C739 and ASTM C665.

   f. Fungi Resistance: ASTM G21.

   g. Water Vapor Sorption: ASTM C1104, less than 1 percent by weight.

   h. Formaldehyde, Phenolic Resins or other Volatile Organic Compounds: 0 percent.

   i. Minimum R value as required by the latest edition of the California Energy Efficiency Standards, but not less than 4.0 at 75 degrees F.

   j. Acoustical Performance: ASTM C423 & ASTM E795 Minimum NRC of 0.75 for interior spaces, minimum NRC of 0.90 for exposed to weather.

   k. Hot and cold plenums separated by single partition: Minimum NRC of 0.75, both sides.

PART 3 – EXECUTION

3.01 INSTALLATION

A. Except as specified herein, install material in accordance with recommendations of manufacturer. Do not install insulation materials until tests specified in other sections are completed. Remove foreign material such as rust, scale, or dirt. Surfaces shall be clean and dry. Maintain insulation clean and dry at all times.

B. On cold surfaces where a vapor barrier must be provided and maintained, insulation shall be installed with a continuous, unbroken moisture and vapor seal. Hangers, supports, anchors, or other projections that are fastened to cold surfaces shall be insulated and vapor sealed to prevent condensation.

C. Surface finishes shall be extended in such a manner as to protect raw edges, ends, and surfaces of insulation.

D. Pipe or duct insulation shall be continuous through walls, ceiling or floor openings, or sleeves; except where fire-stop or fire-safing materials are required.

E. Metal shields shall be installed between hangers or supports and the piping insulation. Rigid insulation inserts shall be installed between the pipe and the insulation shields. Inserts shall be of equal thickness to adjacent insulation and shall be vapor sealed accordingly.

F. Insulation shall not be installed in the following locations unless otherwise noted:

1. On vacuum return lines less than 50 feet long.

2. On unions, flanged connections or valve handles.

3. Over edges of any manhole, clean-out hole, clean-out plug, access door or opening to a fire damper, so as to restrict opening or identification of access.

4. Over any label or stamp indicating make, approval, rating, inspection, or similar data, unless provision is made for identification and access to label or stamp.

3.02 INSTALLATION OF HEATING PIPING SYSTEM INSULATION

(Not Used)

3.03 INSTALLATION OF COOLING PIPING SYSTEM INSULATION

A. General: Refrigerant piping and condensate drain lines, after having been tested, shall be cleaned and insulated.

B. Application: Insulation on refrigerant suction lines and liquid lines, if indicated, and air conditioner interior drain lines shall be jacketed with fire-resistant vapor barrier of laminated aluminum foil consisting of 2 plies with glass-yarn reinforcing. Jacket joints shall be lapped and sealed with an approved adhesive. Insulation shall be secured with aluminum bands not less than 0.005 inch thick by 3/4 inches wide, spaced not over 12 inches on centers, or as recommended by manufacturer.

1. Longitudinal Seams: Butt hinged sections of covering tightly together and seal down jacket flap with adhesive, or with factory-applied, self-sealing lap with pressure-sensitive sealer protected with release paper.

2. End Joints: Wrap joint with a 3-inch wide (minimum) self-sealing tape.

3. Fittings and Valves: Fittings and valves shall be covered with same material of same thickness as pipe insulation, sealed with an approved, vapor-sealing tape or compound and covered with Johns Manville Zeston polyvinyl-chloride cover, Knauf Insulation Proto PVC Fitting Cover, Speedline Polyco Smoke Safe, or equal.

4. Pipe hangers shall be insulated or attached to pipe by an insulating insert, butted between adjoining insulation sections.

C. Additional Jackets:

1. Exposed Indoor Insulation: Cover with 26 gage galvanized sheet metal jacket to 8 feet above floors, except in mechanical equipment rooms and accessible pipe tunnels.

2. Exposed Outdoor Insulation: In addition to canvas or fiberglass cloth cover, provide 0.016 inch thick aluminum jacket with one inch wide aluminum bands and seals. Install appropriate jackets on valves and fittings.

3.04 INSTALLATION OF HIGH TEMPERATURE EQUIPMENT INSULATION

(Not Used)

3.05 INSTALLATION OF LOW-TEMPERATURE EQUIPMENT INSULATION

(Not Used)

3.06 INSTALLATION OF DUCTWORK AND PLENUM INSULATION

A. External Covering:

1. Before installing duct insulation, sheet metal ducts shall be clean, dry, and tightly sealed at joints and seams.

2. Duct exterior insulation shall be firmly wrapped around ductwork with joints lapped a minimum of 2 inches. Insulation shall be securely fastened with 18 gage copper-lined steel wire, or 16 gage soft-annealed galvanized wire spaced approximately 12 inches on centers and at loose ends, presenting a neat and workmanlike appearance. Where duct width is such that wiring will not fasten insulation firmly against duct an adhesive shall be furnished to fasten insulation to duct with wiring being installed at ends of insulation segment.

3. Duct insulation in finished rooms shall be covered with wrapped fiberglass cloth cover. Install on each corner of duct 26 gage galvanized steel small nose, wide flange corner bead of appropriate height. In unfinished rooms, the insulation shall have a vinyl or similar coating. In all rooms, insulation shall be fastened to the ducts with an approved adhesive instead of wire. Corners shall be cut and formed instead of bending the insulating material. Raw edges shall be taped.

4. Insulation on ductwork transporting conditioned air, both supply and return, and outside air intake ducts shall be furnished with a factory-applied, fire-resistant vapor barrier.

5. Exposed Ducts or Plenum:

a. Install insulation to ducts or plenum furnished with butt joints, without voids and with adhesive over entire surface of duct. Cover insulation with canvas jacket, fastened tightly to insulation with lagging adhesive. Install 2 finish coats of undiluted adhesive.

b. When installing jacket, finished covering shall be even and level, without humps, with constant diameters on round ducts maintained.

c. For non-lined insulated ducts or plenums exposed to weather: Insulation finish shall be 0.016 inch thick aluminum sheet with joints lapped not less than 3 inches, sealed, and secured with 6 gage by 3/8 inches aluminum sheet metal screws, or aluminum handgun-type rivets.

B. Lining General:

1. Floors of cold plenums and fan enclosure plenums shall not be insulated.

2. Cover short damper sections on lined ducts on outside to permit free operation of dampers and linkage.

3. Dimensions of ducts indicated are net inside dimensions and must include thickness of duct liners to obtain the required duct size.

4. Install insulation in square turns, where required, to cover interior surfaces before duct turns are installed.

C. Interior insulation (lining) of ducts shall be as specified in above.

1. Liner material installed during fabrication of duct with sealed face only exposed to air stream. Insulation shall be fastened to sheet metal with an approved fire-retardant adhesive, with minimum 90 percent coverage and edges firmly adhered. Mechanical fasteners shall supplement the adhesive on top sections of ducts more than 12 inches wide and on sides of ducts more than 24 inches high, and shall be spaced on 16-inch centers maximum. Fastener posts shall be cut off approximately ¼ inch from metal disc.

D. Interior insulation in ducts or plenums shall not have exposed edges. Edges open to entering or leaving air streams shall be covered, secured in place and sealed with approved duct liner edge sealers.

3.07 CLEANUP

A. Remove rubbish, debris, and waste materials and legally dispose of off the Project site.

3.08 PROTECTION

A. Protect the Work of this Section until Substantial Completion.

END OF SECTION

SECTION 23 08 00

HVAC SYSTEMS COMMISSIONING

PART 1 – GENERAL

1.01 SUMMARY

A. Section Includes:

1. General requirements for Commissioning (Cx) of HVAC systems and equipment including installation, start-up, testing, documentation, and training according to the Construction Documents.

2. Standard procedures for the execution of commissioning work shall be in conformance with Division 01, Section 01 9113: General Commissioning Requirements. Coordinate work with the Commissioning Agent (CxA).

B. Related Requirements:

1. Division 01: General Requirements.

2. Section 01 4523: Testing and Inspection.

3. Section 01 4525: Testing, Adjusting, and Balancing for HVAC.

4. Section 01 7900: Maintenance and Operations Staff Demonstration and Training.

5. Section 01 9113: General Commissioning Requirements.

6. Section 23 0500: Common Work Results for HVAC.

7. Section 23 3000: Air Distribution.

8. Section 23 8000: Heating, Ventilating and Air Conditioning Equipment.

9. Section 26 0500: Common Work Results for Electrical.

10. Section 26 0513: Basic Electrical Materials and Methods.

11. Section 26 0519: Low Voltage Wires (600 Volt AC).

12. Section 26 0526: Grounding and Bonding.

13. Section 26 0586: Motors and Drives.

14. Section 26 0800: Electrical Systems Commissioning.

15. Project Commissioning Plan (CxP).

1.02 REFERENCES

A. Applicable codes, standards, and references: inspections and tests shall be in accordance with the following applicable codes and standards:

1. InterNational Electrical Testing Association – NETA.

2. National Electrical Manufacturers Association – NEMA.

3. American Society for Testing and Materials – ASTM.

4. Institute of Electrical and Electronics Engineers – IEEE.

5. American National Standards Institute – ANSI.

6. National Electrical Safety Code – NESC.

7. California Building Code – CBC.

8. California Electrical Code – CEC.
9. California Mechanical Code – CMC.
10. Insulated Cables Engineers Association – ICEA.
11. Occupational Safety and Health Administration – OSHA.
12. National Institute of Standards and Technology – NIST.
13. National Fire Protection Association – NFPA.
14. American Society of Heating and Air-Conditioning Engineers – ASHRAE

    (The HVAC Commissioning Process, ASHRAE Guideline).
15. Associated Air Balance Council – AABC (National Standards for Total System Balance).

1.03 SUBMITTALS

A. Submittals package shall include the following:

1. Commissioning required submittals in accordance with Division 01 Specification Sections.
2. Copy of the Architect's reviewed and accepted submittals to the CxA via the OAR.
3. List of team members who will represent the Contractor in the Pre-functional Equipment Checks (PEC) and Functional Performance Tests (FPT), at least six weeks prior to the start of Pre-functional Equipment Checks.
4. Detailed manufacturer installation and start-up, operating, troubleshooting and maintenance procedures, a copy of full details of Owner-contracted tests, full factory testing reports, if any, and Warranty information, including responsibilities of Owner to keep Warranty in force clearly defined.
5. Installation and checklist documentation shipped with equipment and field checklist forms to be used by factory or field technicians.
6. Detailed manufacturer's recommended procedures and schedules for PECs, supplemented by Contractor's specific procedures, and FPTs, at least four weeks prior to the start of PEC.

1.04 MEETINGS, SEQUENCING AND SCHEDULING

A. Meetings: Attend the Cx meetings as required under Section 01 9113 and Cx Plan.

B. Sequencing and Scheduling: The work described in this Section shall begin only after work required in related Divisions 23 and 26 Sections has been successfully completed and tests, inspection reports, and Operation and Maintenance manuals required have been submitted and accepted. The start-up and PEC shall be completed and submitted to the Owner at least two weeks prior to beginning FPT.

1. Coordinate HVAC work with the work of other trades prior to scheduling of any Cx procedures.
2. Coordinate the completion of HVAC testing, inspection, and calibration prior to start of Cx activities.

1.05 QUALITY CONTROL

A. Comply with Division 01 quality control specifications.

B. Incorporate manufacturer's recommended Cx procedures for the systems and equipment to be commissioned under this Section.

C. Comply with Section 01 4525: Testing, Adjusting, and Balancing for HVAC.

1.06 EQUIPMENT AND SYSTEMS TO BE COMMISIONED

A. Split Systems.

B. gas fired heater

C. Fan Coil Units.

D. Exhaust Fans.

E. Ventilators.

F. Water Heaters, Gas

PART 2 – PRODUCTS

2.01 TEST EQUIPMENT

A. Equipment to be utilized in the commissioning process shall meet the following requirements:

1. Provide test equipment as necessary for the testing of the equipment and systems to be commissioned.

2. Provide testing equipment and accessories that are free of defects and certified for use.

3. Provide testing equipment with current calibration labels as per NIST Standards.

4. Equipment shall be calibrated on the manufacturer’s recommended intervals with calibration tags affixed to the instrument. In the absence of calibration tags, calibration documentation shall be submitted to the CxA at least thirty days prior to use; this documentation shall include description and serial number of instrument and calibration data and date.

5. Testing equipment shall be maintained in good operating condition for the duration of the project.

PART 3 – EXECUTION

3.01 COMMISSIONING PROCESS REQUIREMENTS

A. Work to be performed prior to commissioning:

1. Complete phases of the work so the system(s) can be started, tested, adjusted, balanced, and otherwise commissioned.

2. If modifications or corrections to the installed system(s) are required to bring the system(s) to acceptance levels due to Contractor’s incorrect installation or defective materials, such modifications shall be made at no additional cost to the Owner.

3. Normal start-up services required to bring each system into full operational state:

a. Testing, motor rotation check, control sequences of operation, full and part load performance.

b. Commissioning shall not start until each system is complete and start-up has been performed.

B. Pre-Commissioning responsibilities:

1. Inspection, calibration and testing of the equipment required to commission the following systems:

a. HVAC System(s).

C. Commissioning Process Requirements:

1. Refer to Section 01 9113: General Commissioning Requirements and related Sections for information on meetings, start-up plans, Pre-Functional and FPT, operations and maintenance data, training requirements, and other Cx activities.

3.02 PREPARATION

A. Provide certified HVAC technicians as required, with tools and equipment necessary to perform Cx activities specified.

B. Provide certified testing agency personnel and equipment factory representatives as require in the Cx plan and other related Sections.

C. Verify that work required in this Section and in Section 01 9113 is complete prior to starting of FPT.

D. Verify that complete operational manuals have been reviewed and accepted by the CxA as specified before starting FPT.

3.03 TESTING

A. Testing procedures shall include the following minimum information:

1. Test number.

2. Equipment used for the test, with manufacturer and model number and date of last calibration.

3. Date and time of the test.

4. Indication of whether the record is for a first test or retest following correction of a problem or issue.

5. Identification of the system, subsystem, assembly, or equipment.

6. Conditions under which the test was conducted, including (as applicable); ambient conditions, set points, override conditions, status, and operating conditions that impact the results of the test.

7. Systems and assemblies test results and performance and compliance with contract requirements.

8. Issue number, if any, generated as the result of the test.

9. Name(s) and signature(s) of witnesses and the person(s) performing the test.

B. Contractor shall participate and perform Cx related testing requirements as specified.

C. General Requirements for Mechanical, Controls, and Testing and Balance:

1. Construction and Acceptance Phases:

a. Provide assistance to CxA in preparing FPT procedures specified. Sample test forms are include in the project Cx Plan.

b. Develop full startup and initial checkout plan using manufacturer’s start-up procedures and Cx checklists for commissioned equipment. Submit to CxA for review and approval prior to startup.

c. During startup and initial checkout process, execute mechanical-related portions of PEC for the equipment and systems to be commissioned.

d. Perform and clearly document completed startup and system operational checkout procedure. Providing four copies of the results to the Owner.

e. Resolve any open punch list items before FPT. Air testing and balance shall be completed with discrepancies and problems remedied before FPT of respective air -related systems.

f. Provide skilled technicians to execute starting of equipment and to execute PFT. Ensure that technicians are available and present during agreed upon schedules and for sufficient duration to complete necessary tests, adjustments, and solutions to identified problems.

g. Maintain a log of events and issues of tests and related Cx activities. Submit handwritten reports of discrepancies, deficient or uncompleted work by others, contract interpretation requests, and lists of completed tests as specified.

h. Correct open issues and re-test as needed to prove compliance with system operational standards.

i. Prepare Operation and Maintenance Manuals and provide training for the Owner maintenance personnel and end-users per Section 01 7900.

j. Coordinate with equipment manufacturers to determine specific requirements to maintain validity of Warranty and notify the Owner.

k. Execute simulated seasonal FPT, witnessed by the Owner and the CxA, as specified. Document results and perform corrections as needed for system acceptance and make necessary adjustments to Maintenance and Operations Manuals and Record Drawings.

3.04 SENSOR CALIBRATION

A. Field-installed temperature, relative humidity, CO_2, pressure sensors, pressure gages, and actuators (dampers and valves) shall be calibrated using the methods described below. Calibration procedures shall be documented during execution of the Start-up and the PEC. Alternate methods may be used, if approved by the CxA.

B. Test instruments shall have had a NIST certified calibration within the last 12 months. Sensors installed in the unit at the factory with provided calibration certification need not be field calibrated.

C. Sensors:

1. Verify that sensor locations are appropriate and away from causes of erratic operation.

2. Verify that sensors with shielded cable are grounded only at one end.

3. For sensor pairs that determine a temperature difference, make sure they are reading within 0.2 degrees F of each other.

4. For sensor pairs that determine a pressure difference, make sure they are reading within 2 percent of each other.

5. Calibration: Put the equipment in operation. Make a reading with a calibrated test instrument within six inches of the site sensor. Verify that the sensor reading (via the permanent thermostat or gage) is within the tolerance listed in the table below of the instrument-measured value. If not, calibrate or replace sensor.

6. Tolerances:

Sensor	Required Tolerance (+/-)
Outside air, space air, duct air temps	0.4 degrees F
Watt-hour, voltage, and amperage	1 percent of design
Pressures, air, water and gas	3 percent of sensor range (inc. design value)
Flow rates, air	10 percent of sensor range (inc. design value)
Flow rates, natural gas	5 percent of sensor range (inc. design value)
Sound level	5 db - Type 1 meter (Per Calibrator Mfg.)
Domestic Hot Water Temperature	1.5 degrees F
Domestic Hot Water Pressures Water and Gas	3 percent of sensor range (inc. design value)
Flow Rates, Domestic Water	4 percent of sensor range (inc. design value)
Flow Rates	5 percent of sensor range (inc. design value)

3.05 ADJUSTING

A. Perform work required to rectify installations not meeting contract requirements at no additional cost to the Owner.

B. Corrective work shall be completed in a timely manner to permit completion of the Cx process.

C. If systems' Cx deadline, as defined in the Project Schedule, goes beyond the scheduled completion without resolution of the problem(s), the Owner reserves the right to obtain supplementary services or equipment to resolve the problem.

3.06 TRAINING

A. Provide training plan for systems to be commissioned as required in applicable Division 23 specification sections and Section 01 7900.

END OF SECTION

SECTION 23 08 13

ENVIRONMENTAL CONTROLS AND ENERGY MANAGEMENT SYSTEMS COMMISSIONING

PART 1 – GENERAL

1.01 SUMMARY

A. Section Includes:

1. General requirements for the Commissioning (Cx) of the Environmental Controls and Energy Management System (ECEMS), and interfacing with other systems such as, lighting controls and HVAC systems interconnection, including installation, start-up, testing and documentation according to Construction Documents and Commissioning Plan (CxP).

2. Standard procedures for the execution of commissioning work shall be in conformance with Division 01, Section 01 9113: General Commissioning Requirements. Coordinate work with the Commissioning Agent (CxA).

B. Related Requirements:

1. Division 01: General Requirements.

2. Section 01 4523: Testing and Inspection.

3. Section 01 7700: Contract Closeout.

4. Section 01 7900: Maintenance and Operations Staff Demonstration and Training.

5. Section 01 9113: General Commissioning Requirements.

6. Section 23 0500: Common Work Results for HVAC.

7. Section 23 0513: Basic HVAC Materials and Methods.

8. Section 23 0800: HVAC Systems Commissioning.

9. Section 23 0900: Instrumentation and Controls.

10. Section 23 0923: Environmental Controls and Energy Management Systems.

11. Section 23 3000: Air Distribution.

12. Section 23 8000: Heating, Ventilating and Air Conditioning Equipment.

13. Section 26 0500: Common Work Results for Electrical.

14. Section 26 0513: Basic Electrical Materials and Methods.

15. Section 26 0519: Low Voltage Wires (600 Volt AC).

16. Section 26 0526: Grounding and Bonding.

17. Section 26 0586: Motors and Drives.

18. Section 26 0800: Electrical Systems Commissioning.

19. Section 26 2419: Motor Control Centers and Motor Control Devices.

20. Project Commissioning Plan.

1.02 REFERENCES

A. The latest version of applicable codes, standards, and references: Inspections and tests shall be in accordance with the following applicable codes and standards, except as provided otherwise herein:

1. National Electrical Manufacturers Association – NEMA.
2. American Society for Testing and Materials – ASTM.
3. American National Standards Institute – ANSI.
4. California Electrical Code – CEC.
5. Occupational Safety and Health Administration – OSHA.
6. National Institute of Standards and Technology – NIST.
7. American Society of Heating, Refrigerating and Air-Conditioning Engineers (ASHRAE). – Building Management and Energy Management Systems Commissioning, ASHRAE Guideline.
8. California Building Code – CBC.
9. California Mechanical Code – CMC.
10. InterNational Electrical Testing Association (NETA) Acceptance Testing.

1.03 SUBMITTALS

A. Submittals shall include the following:

1. Required Cx submittals in accordance with Division 01 Specifications.
2. Copy of the Architect's reviewed and accepted submittals to the CxA via the OAR.
3. List of team members who will represent the Contractor in the Pre-functional and Functional Performance Testing, at least two weeks prior to the start of Pre-functional Equipment Checks.
4. Detailed manufacturer installation and start-up, operating, troubleshooting and maintenance procedures, checklist documentation and field checklist forms to be used by factory or field technicians, and a copy of full details of Owner-contracted tests, full factory testing reports, if any, and Warranty information, including responsibilities of Owner to keep Warranty in force, clearly defined.
5. Detailed manufacturer's recommended procedures and schedules for Pre-functional Equipment Checks, supplemented by Contractor's specific procedures, and Functional Performance Tests, at least four weeks prior to the start of Pre-functional Performance Tests.
6. System logic documentation and sequence of operations for review and approval.
7. Provide Level 1 passwords.
8. After facility's commission is complete, submit completed Pre-functional Equipment Checklists and Functional Performance Test checklists organized by system and by subsystem. Bind information in a single package. The results of failed tests shall be included along with a description of the corrective actions taken.

1.04 MEETINGS, SEQUENCING AND SCHEDULING

A. Meetings: Attend Cx meetings as required under Section 01 9113, any other related Sections and the CxP.

B. Sequencing and Scheduling: The work described in this Section shall begin only after work required in related Division 23 and 26 Sections have been successfully completed, and tests, inspection reports and Operation & Maintenance manuals required have been submitted and reviewed. The start-up and Pre-functional Equipment Checklists shall be completed and submitted to the Owner's Authorized Representative (OAR) prior to the Functional Performance Tests.

1. Coordinate electrical work with the work of other trades prior to scheduling of any Cx procedures.

2. Coordinate the completion of electrical testing, inspection, and calibration prior to start of Cx activities.

3. Cx activities shall be scheduled in accordance with project's Section 01 9113 and Cx plan.

1.05 QUALITY CONTROL

A. Comply with Owner's Quality Control Specifications.

B. Incorporate manufacturer's recommended Cx procedures for the systems and equipment to be commissioned under this Section.

C. Typical quality control procedures include but are not limited to the following:

1. Attend CxA progress and coordination meetings.

2. Establish trend logs of system schedules as required in Section 23 0923.

3. Demonstrate system operation and compliance with contract documents.

4. Manipulate systems and equipment to facilitate testing.

5. Provide instrumentation necessary for verification and performance testing.

D. Provide ECEMS technician(s) to work at the direction of the CxA for software optimization assistance for a minimum of 8 hours. Refer to Part 3 for a description of the software optimization.

E. Compensation for Retesting: Compensate Owner for site time necessitated by incompleteness of systems or equipment at time of Functional Performance Testing (FPT). Testing failures, which require on-site time for retesting, will be considered actual damages to the Owner. Parties under contract with the Owner who are affected by the retesting shall be included in the contract modification.

F. Allow sufficient time before final commissioning dates to complete electrical testing, inspection, and calibration to avoid delays in the commissioning process.

G. During the commissioning activities, provide labor and materials to make corrections when required, without undue delay.

1.06 COORDINATION

A. Coordinate the completion of electrical testing, inspection, programming and calibration prior to start of commissioning activities.

B. Coordinate factory field-testing per the requirements of this Section.

C. Coordinate commissioning efforts with CxA prior to commencing any activities.

PART 2 – PRODUCTS

2.01 TEST EQUIPMENT

A. Equipment to be used in the commissioning process shall meet the following requirements.

1. Provide test equipment as necessary for start-up and commissioning of the EMS system.

2. Provide testing equipment and accessories that are free of defects and are certified for use.

3. Provide testing equipment with current calibration labels as per NIST Standards; Equipment shall be calibrated on the manufacturer's recommended intervals with calibration tags affixed to the instrument. In the absence of calibration tags, calibration documentation shall be submitted to the CxA at least thirty days prior to use; this documentation shall include description and serial number of instrument and calibration date and time.

4. Testing equipment shall be maintained in good operating condition for the duration of the project.

5. Testing equipment shall be UL Listed.

B. Instrumentation required to verify readings and test the system and equipment performance shall be provided by the Contractor and made available to CxA. Generally, no testing equipment will be required beyond that required to perform Contractor's work under contract documents.

2.02 TESTING AND AIR BALANCING AND COMMISSIONING

A. Provide a portable operator's terminal or hand-held device to facilitate testing, adjusting, and calibration of controls. This device shall support functions and allow querying and editing of parameters required for proper calibration and start up.

B. Connections shall be provided local to the device being calibrated. For instance, for VAV boxes, connection of the operator's terminal shall be either at the sensor or at the terminal box. Otherwise, a wireless system shall be provided to facilitate this local functionality.

PART 3 – EXECUTION

3.01 COMMISSIONING PROCESS REQUIREMENTS

A. Work prior to commissioning:

1. Complete phases of the work so the system(s) can be started, tested, adjusted, balanced, and otherwise commissioned.

2. If contractual modifications are required to bring the system(s) to acceptance levels, such modifications shall be made at no additional cost to the owner.

3. Normal start-up services required to bring each system into full operational state:

a. Testing, motor rotation check, control sequences of operation, full and part load performance.

b. Commissioning will not start until each system is complete and start-up has been performed.

B. Pre-Commissioning responsibilities:

1. Inspection, calibration and testing of the equipment required to commission the following systems:

a. Environmental Controls and Energy Management Systems.

b. Interface and connections of EMS system with lighting controls, electric utility meter, gas meter, photo voltaic system, or as otherwise indicated in contract documents.

C. Commissioning Process Requirements:

1. Refer to Section 01 9113: General Commissioning Requirements and related Sections for information on meetings, start-up plans, Functional Performance Testing (FPT), operations and maintenance data, training requirements, and other Commissioning activities.

3.02 PREPARATION

A. Provide certified EMS technicians as required, with tools and equipment necessary to perform Cx activities specified.

B. Provide certified testing agency personnel and equipment factory representatives as required in the Cx plan and other related Sections.

C. Verify that work required in this Section and in Section 01 9113 is complete prior to starting of FPT.

D. Verify that complete operational manuals have been reviewed and accepted by the CxA as specified before starting FPT.

3.03 START-UP, TESTING, ADJUSTING, AND CALIBRATION

A. Work or systems installed shall be fully functioning prior to Demonstration and Acceptance Phase. Start, test, adjust, and calibrate work as described below:

1. Inspect the installation of devices. Review the manufacturer's installation instructions and validate that the device is installed in accordance with them.

2. Verify proper electrical voltages and amperages, and verify that circuits are free from faults.

3. Verify integrity/safety of electrical connections.

4. Coordinate with testing and air balance (TAB) subcontractor to obtain, Cx and fine-tune control settings that are determined from balancing procedures.

5. Test, calibrate, and set digital devices. Test equipment shall be 50 percent more accurate that the filed device over the same range. Calibrate each instrumentation device by making a comparison between the ECEMS display and the reading at the device. (e.g., if field device is plus or minus 0.5 percent accurate, test equipment shall be plus or minus 0.25 percent accurate over the same range). Record the measured value and displayed value for each device in the ECEMS start-up report.

6. Check and set zero and span adjustments for transducers and transmitters.

7. Dampers:

a. Check for adequate installation including free travel throughout range and adequate seal.

b. Where loops are sequenced, check for proper control with overlap.

8. Check each digital control point by making a comparison between the control command at the central command unit and the status of the controlled device. Check each digital input point by making a comparison of the state of the sensing device and the ECEMS display. Record the results for each devise in the ECEMS start-up report.

9. For outputs to reset other manufacturer's devices (for example, VSDs) and for feedback from them, calibrate ranges to establish proper parameters. Coordinate with representative of the respective manufacturer and obtain their approval of the installation.

10. Verify proper sequences by using the checklists to record results and submit with ECEMS start-up report. Verify proper sequence and operation of specified functions.

11. Verify that safety devices trip at appropriate conditions. Adjust setpoints accordingly.

12. Tune control loops to obtain the fastest stable response without hunting, offset or overshoot. Record tuning parameters and response test results for each control loop in the ECEMS start-up report. Except from a startup, maximum allowable variance from setpoint for controlled variables under normal load fluctuations shall be as follows. Within 3 minutes of any upset (for which the system has the capability to respond) in the control loop, tolerances shall be maintained (exceptions noted):

    a. Duct air temperature: plus or minus 1 degree F.

    b. Space temperature: plus or minus 2 degrees F.

    c. Hot water temperature: plus or minus 3 degrees F

    d. Duct pressure: plus or minus 0.25 inches w.g.

    e. Water pressure: plus or minus 1 psid.

    f. Air flow control: plus or minus 5 percent of setpoint velocity.

    g. Space pressurization: plus or minus 0.05 inches w.g.

13. For interface and DDC control panels:

    a. Ensure devices are properly installed with adequate clearance for maintenance and with clear labels in accordance with the record drawings.

    b. Ensure that terminations are safe, secure and labeled in accordance with the record drawings.

    c. Check power supplies for proper voltage ranges and loading.

    d. Ensure that wiring and tubing are run in a neat and workman-like manner, either bound or enclosed in trough.

    e. Check for adequate signal strength on communication networks.

    f. Check for standalone performance of controllers by disconnecting the controller from the LAN. Verify that the controlling LAN reconfigures as specified in the event of a LAN disconnection.

    g. Ensure that outputs and devices fail to their proper positions/states.

    h. Ensure that buffered or volatile information is held through power outage.

    i. With system and communications operating normally, sample and record update/annunciation times for critical alarms fed from the panel to the Operator Interface.

    j. Check for adequate grounding of DDC panels and devices.

14. Operator Interfaces:

a. Verify that elements on the graphics are functional and are properly bound to physical devices or virtual points, and that hot links or page jumps are functional and logical.

b. Output specified ECEMS reports for review and approval.

c. Verify that the alarm printing and logging is functional and per requirements.

d. Verify that trends are archiving to disk and provide a sample to the CxA and owner for review.

e. Verify that e-mail alarm annunciation is functional.

f. Verify that functionality of remote operator interfaces.

g. Verify that required third party software applications required with the bid are installed and are functional.

h. Verify proper interface with fire alarm, lighting control system, photo voltaic system, gas and electrical meters.

B. Submit start-up test report: Report shall be completed, submitted, and reviewed prior to Substantial Completion.

3.04 SENSOR CHECKOUT AND CALIBRATION

A. General Checkout: Verify that sensor locations are appropriate and are away from causes of erratic operation. Verify that sensor with shielded cable are grounded only at one end.

B. Calibration: Calibrate sensors using one of the following procedures:

1. Sensors Without Transmitters – Standard Application: Make a reading with a calibrated test instrument within 6 inches of the site sensor at various points across the range. Verify that the sensor reading (via the permanent thermostat, gage, or ECEMS) is within the tolerances specified for the sensor. Where sensors are subject to wide variations in the sensed variable, calibrate sensor within the highest and lowest 20 percent for the expected range.

C. Sensor Tolerance: Sensors shall be within the tolerances specified for the device.

3.05 ECEMS DEMONSTRATION

A. Demonstrate the operation of the ECEMS hardware, software, and related components and systems to the satisfaction of the CxA and Owner. Schedule the demonstration with the Owner's representative two weeks in advance. Demonstration shall not be scheduled until hardware and software submittals and the start-up test report are reviewed. If the work fails to be demonstrated to conform with contract specifications, so as to require scheduling of additional site visits by the CxA and Owner's representative for re-demonstration, reimburse owner for reasonable local costs of subsequent CxA site visits as detailed elsewhere in these specifications.

B. Supply personnel and equipment for the demonstration, including, but not limited to, instruments, ladders, etcetera. Contractor-supplied personnel shall be competent with and knowledgeable of project-specific hardware, software, and the HVAC systems. Training documentation and submittals shall be at the job site.

C. Demonstration shall typically involve small representative samples of systems and equipment randomly selected by the owner and CxA.

D. The system shall be demonstrated following the same procedures used in the start-up test by using the Commissioning checklist. Demonstration shall include, but not necessarily be limed to, the following:

1. Demonstrate that required software is installed on ECEMS workstations. Demonstrate that graphic screens, alarms, trends, and reports are installed as submitted. Demonstrate directory structure and file system matches that submitted.

2. Demonstrate that points specified and shown can be interrogated or commanded (as applicable) from workstations, as specified, in less than the maximum response time.

3. Demonstrate correct calibration of input/output devices using the same methods specified for the start-up tests. A maximum of 10 percent of I/O points shall be selected at random by the CxA or owner for demonstration. Upon failure of any device to meet the specified end-to-end accuracy, an additional 10 percent of I/O points shall be selected at random by CxA for demonstration. This process shall be repeated until 100 percent of randomly selected I/O points have been demonstrated to meet specified end-to-end accuracy.

4. Demonstrate that DDC and other software programs exist at respective field panels. The DDC programming and point database shall be as submitted.

5. Demonstrate that DDC programs accomplish the specified sequences of operation including failure sequences.

6. Demonstrate that the panels automatically recover from power failure, as specified. Demonstrate alarms as specified.

7. Demonstrate that the stand-alone operation of panels meets the requirements of these Specifications. Demonstrate that the panels' response to LAN communication failures meets the requirements of these Specifications.

8. Identify access to equipment selected by CxA or by the owner. Demonstrate that access is sufficient to perform required maintenance.

9. Demonstrate that required trend graphs and trend logs are set up per the requirements. Provide a sample of the data archive. Indicate the file names and locations.

E. ECEMS demonstration shall be completed and prior to Substantial Completion.

F. Tests successfully completed during the demonstration will be recorded as passed for the Functional Performance Testing (FPT) and will not have to be retested.

3.06 RESOLUTION OF DEFICIENCIES

A. Maladjustments, misapplied equipment, or deficient Contractors performance may result in additional work being required for Cx acceptance.

1. Perform work required to correct the installations not meeting contract requirements at no additional cost to the Owner.

B. Corrective work shall be completed in a timely manner to permit completion of the Cx process.

1. Refer to Article 3.07 above, Section 01 9113, and Cx plan for retesting requirements necessary to achieve required system performance.

2. If the system's Cx deadline, as defined in the CxP, goes beyond the scheduled completion of Cx without resolution of the problem, the Owner reserves the right to obtain supplementary services or equipment to resolve the problem.

3.09 ECEMS ACCEPTANCE PERIOD

A. After approval of the ECEMS demonstration and prior to contract close-out acceptance phase shall commence. Acceptance period shall not be scheduled until HVAC systems are in operation and have been accepted, required cleaning and lubrication has been completed (i.e., filters changed, piping flushed, strainers cleaned, and the like), and Testing and Balancing report has been submitted and reviewed. Acceptance Period and its approval will be performed on a system-by-system basis if mutually agreed upon by the Contractor and the owner.

B. Operational Test: At the beginning of the Acceptance Phase, the system shall operate properly for two weeks without malfunction, without alarm caused by control action or device failure, and with smooth and stable control of systems and equipment in conformance with these specifications. At the end of the two weeks, forward the trend logs to the CxA for review and acceptance. CxA shall determine is the system is ready for Functional Performance Testing (FPT) and document any problems requiring Contractor attention.

1. If the systems are not ready for Functional Performance Testing (FPT), correct problems and provide notification to the owner's representative that problems have been corrected. The acceptance period shall be restarted at the mutually scheduled time for an additional one-week period. This process shall be repeated until CxA issues notice that the ECEMS is ready for Functional Performance Testing (FPT).

C. During the acceptance period, maintain a hard copy log of alarms generated by the ECEMS. For each alarm received, diagnose the cause of the alarm, and list on the log for each alarm the diagnosed cause of the alarm, and the corrective action taken.

3.10 TREND LOGS

A. Configure and analyze trends required under Section 23 0923.

3.11 TREND GRAPHS

A. Trend graphs as specified in Section 23 0923 shall generally be used during the acceptance phase to facilitate and document testing. Prepare controller and workstation software to display graphical format trends during the acceptance period. Trend graphs shall demonstrate compliance with contract documents.

B. Each graph shall be clearly labeled wit HVAC subsystem title, date, and times.

3.12 WARRANTY PHASE

A. Trending: Throughout the Warranty phase, trend logs shall be maintained as required for the acceptance period. Forward archive trend logs to the CxA and Owner for review. CxA or Owner will review these and notify Contractor of Warranty work required.

3.13 SOFTWARE OPTIMIZATION ASSISTANCE

A. Provide the services of an ECEMS technician at the project site to be at the disposal of the CxA and Owner. The technician is to make changes, enhancements, and additions to control unit or workstation software that has been identified by the CxA or Owner during the Construction and Commissioning of the project and that are beyond the specified contract requirements. The cost for this service to include a total of 40 hour will be included with the bid. Request for assistance shall be for contiguous or non-contiguous 8 hour days, unless otherwise mutually agreed upon by the Contractor, CxA, and OAR. The Owner Authorized Representative (OAR) shall notify Contractor two days in advance of each day of requested assistance.

B. The ECEMS technician provided shall be trained in the programming and operation of the controller and workstation software. If the ECEMS technician provided cannot perform

every software task requested by the CxA or Owner in a timely fashion, provide additional qualified personnel at the project site as requested by the CxA or Owner.

END OF SECTION

SECTION 23 09 00

HVAC INSTRUMENTATION AND CONTROLS

PART 1 – GENERAL

1.01 SUMMARY

A. Section Includes: Temperature controls for air conditioning, heating, and ventilating systems as indicated. Work includes, but is not be limited to, the following:

1. Automatic control valves and automatically operated dampers.

2. Pneumatic or electric relays (magnetic starters excluded), electric or mechanical linkages, duct sensors, thermostats, dampers and motorized valves, and appurtenances and accessories.

3. Wiring outlet boxes and conduits for control systems, including wiring to connect magnetic starters to control systems.

4. Air compressor and receiver tank for pneumatic control systems, with appurtenances and air piping, including pressure regulator, automatic moisture eliminators, air line filters, relief valves, pressure gages and shut-off valves, drains, pneumatic piping distribution to control equipment, etcetera.

5. Testing and adjusting temperature control system.

6. Furnishing record drawings and operational data of systems as installed and finally adjusted.

7. Formal instruction of Owner personnel in operation of equipment.

B. Following items are specified in other Sections:

1. Magnetic starters, contacts, power relays and variable resistors or controllers for motors, and other electrical devices.

2. Load carrying wiring for above listed devices and wiring for starting switches not interconnected with temperature control system. (Division 26: Electrical).

3. Electrical power to control panels and other equipment. (Division 26: Electrical).

4. Installing automatic valves in pipelines.

5. Installing automatic dampers.

6. Automatic controls and valves not connected with comfort heating, ventilating, and air conditioning systems.

7. Packaged self contained equipment specified complete with temperature controls.

8. DDC control equipment specified in Section 23 0923: Environmental Control and Energy Management Systems.

C. Related Requirements:

1. Division 01: General Requirements.

2. Division 26: Electrical.

3. Section 23 0500: Common Work Results for HVAC.

4. Section 23 0513: Basic HVAC Materials and Methods.

5. Section 23 0800: HVAC Systems Commissioning.

6. Section 23 0923: Environmental Control and Energy Management Systems.

8. Section 23 3000: Air Distribution.

9. Section 23 8000: Heating, Ventilating and Air Conditioning Equipment.

1.02 SUBMITTALS

A. Provide in accordance with Division 01 and Section 23 0500: Common Work Results for HVAC.

1. Complete list of items proposed to be furnished and installed under this Section.

2. Manufacturer's specifications and other data required to demonstrate compliance with specified requirements.

3. Manufacturer's printed installation procedures.

B. Shop Drawings: Provide Shop Drawings, in the same size as the Drawings, prepared, signed and sealed by a mechanical engineer licensed in the State of California. Shop Drawings shall indicate temperature control diagrams, complete with equipment appurtenances required for system. Include sequence of operation description for each system. Submit in accordance with of Division 01.

C. Sequence of Operation: Provide complete, detailed, step-by-step sequence of operation for each item of equipment.

D. Operating Instructions: Comply with provisions of Section 23 0500: Common Work Results for HVAC. Explain and demonstrate operation of system to Owner representatives as required.

E. Guarantee: Refer to Section 23 0500: Common Work Results for HVAC.

1.03 QUALITY ASSURANCE

A. Manufacturer and Installer Qualifications: Comply with provisions stated under Section 23 0500: Common Work Results for HVAC.

1.04 PRODUCT HANDLING

A. Production, Replacement, Delivery and Storage: Refer to Section 23 0500: Common Work Results for HVAC and Section 23 0513: Basic HVAC Materials and Methods.

PART 2 – PRODUCTS

2.01 TEMPERATURE CONTROLS

A. Provide temperature controls of pneumatic, electric, electronic microprocessor - DDC type, or a combination thereof, as indicated on Drawings, to provide required sequences or operational control.

2.02 MANUFACTURERS

A. Equipment in system shall be of same manufacturer or their standard furnished items. Testing, initial start-up, and adjusting of control system shall be under continuous observation of the mechanical engineer responsible for Shop Drawing preparation.

B. Electronic, or direct digital microprocessor based control equipment shall be one of following manufacturers, unless otherwise noted:

1. Honeywell, Inc.

2. Johnson Controls, Inc.

3. Invensys.

4. Equal.

2.03 ELECTRIC EQUIPMENT AND ACCESSORIES

A. Electric control equipment and accessories include, but are not limited to, the following:

1. Electric control devices as indicated on Drawings and described herein, including thermostats, temperature controllers, valve and damper operators, switches, relays, and control panels for instruments as required to provide a complete and operable system.

2. Wiring and conduit, unless otherwise noted, or control systems including wiring required, to connect magnetic starters, specified in other sections, to control systems.

B. Room Thermostats:

1. Thermostats for unitary air conditioning units shall be as specified in Section 23 8000: Heating, Ventilating and Air Conditioning Equipment. Thermostats located on outside walls shall be installed on insulated backplates or as specified by unit manufacturer.

2. Provide the following room thermostats for each specific application as follows, where manufacturer’s thermostats are not specified in Section 23 8000:

a. Honeywell, Johnson Controls, Invensys, or equal, for heating only; Honeywell, Johnson Controls, Invensys, or equal, for cooling only.

b. Honeywell, Johnson Controls, Invensys, or equal, microelectronic commercial thermostat with sub-base for electronic control of 18 to 30 VAC single zone HVAC equipment. Thermostat is either stand alone, or

arranged in a temperature averaging network consisting of 2, 3, 4, 5, or 9 sensors for corresponding rooms or zones.

c. Honeywell, Johnson Controls, Invensys, or equal, proportional thermostat, low-voltage, 3-wire controller for valve, damper motors and balancing relays. Unit manufacturer may specify or recommend optional thermostat.

d. Provide tamper-proof locking thermostat guards for items specified above. Covers shall be opaque beige plastic in student occupied areas, clear plastic cover in administrative areas. Provide Honeywell, Johnson Controls, Invensys, or equal, universal thermostat guards or as recommended by thermostat manufacturer.

C. Duct-Mounted Thermostats: Duct-mounted thermostats shall be modulating or 2-position as required to accomplish sequence of operation.

D. Valve and Damper Motors: Damper motors shall be furnished with oil-immersed gear trains and ample capacity to handle required loads under normal operating conditions. Where indicated, spring return type motors are to be provided. Valve motors to be 2-position or proportional, spring return or now spring return.

E. Time Clocks:

1. TC-1: Time clock shall be solid-state digital electronic type capable of 28 on/off set points to be distributed through the week, complete with a day repeat feature, time and set points to be adjustable to nearest minute with a minimum on duration of one minute and a maximum of 7 days. UL Listed, enclosed in standard case NEMA Type 1, Intermatic, Tork, Paragon, or equal, with battery operated carry-over.

2. TC-2: Interval timer (bypass), except for window units, shall be manually set and spring operated type, 0 to 6 hours, and without hold feature. Provide Intermatic, M.H. Rhodes, Paragon, or equal.

3. TC-3: Bypass timer for window type air conditioner units shall be DPDT switch configuration, 12 hours, and without hold feature. Provide M.H. Rhodes, Intermatic, Tork, or equal. Provide double gang box as specified in Division 26: Electrical.

F. Wiring: Wiring in connection with control systems regardless of voltage, except power supply circuits, is part of the Work of this Section. Wiring shall comply with Division 26: Electrical.

G. See Section 23 0923 for DDC/Electronic controls.

PART 3 – EXECUTION

3.01 TEMPERATURE CONTROL SYSTEM INSTALLATION

A. Control system shall be installed in accordance with control manufacturer's instructions and reviewed Shop Drawings.

3.02 CONTROL PANELS OR CABINETS

A. Switches, clocks, temperature control instruments, and remote bulb thermometers, whose capillary tubes are less than 25 feet in length, shall be mounted in control panels with required wiring, piping, and tubing behind panel. Control panels shall be galvanized steel sheet metal, with light gray hammertone enamel finish, not lighter than 14 gage. Control panels shall be UL Listed. Panels shall be attached to wall at locations indicated, or as required. Adjustable apparatus shall be provided with P-Touch, or equal, labels to indicate function. A clear space of 30 inches in front shall be maintained.

B. Control cabinets shall be provided with door locks. Door locks shall be the flush type, latched, 5/8 inch for metal door, keyed to a Corbin Cat. No. 60 key. Cabinet shall be prime coated and finish painted as specified in Section 09 9000: Painting and Coating. Cabinet shall be flush mounted.

3.03 ROOM THERMOSTAT

A. Room thermostats shall be wall mounted at a height of approximately 4 feet. Room thermostats are not permitted on outside walls, at marker boards, between shelving, in recesses or above heat producing equipment. Units shall be installed as close to edge of tack board as possible. Room thermostats shall be furnished with tamperproof cover. Thermostats shall be furnished with set point windows and integral thermometers. Office thermostats shall be furnished with extended adjustment knobs; others shall have key adjustments. Room thermostats shall be furnished with non-switching sub-bases.

3.04 COORDINATION

A. Coordinate this Work with other aspects of system balancing to obtain a complete operating mechanical system in accordance with design intent, including coordinating with balancing of the system.

B. Coordinate this Work with all aspects of alarm, fire alarm, and smoke detector, specified in Division 26: Electrical.

3.05 SEQUENCE OF OPERATION

A. Each system, pneumatic, electric, electronic, or direct digital control shall operate as graphically and described on Drawings and in accordance with reviewed sequence of operation.

3.06 CONTROL SYSTEM ADJUSTMENTS

A. Perform adjustments under operating conditions to provide sequence of operation for controls indicated. If required operating conditions cannot be obtained before Substantial Completion, due to outdoor seasonal temperatures, return to the Project site when requested by the Owner and readjust control system when outdoor temperatures will permit proper operating conditions. Start readjustment within seven calendar days after notification. Final settings of controls and pressure ranges indicated by gages shall be indicated on project record documents.

3.07 PROTECTION

A. Protect the Work of this Section until Substantial Completion.

3.08 CLEANUP

A. Remove rubbish, debris, and waste materials and legally dispose of off the Project site.

END OF SECTION

SECTION 23 09 23

ENVIRONMENTAL CONTROLS AND ENERGY MANAGEMENT SYSTEMS

PART 1 – GENERAL

1.01 SUMMARY

A. Section Includes: Environmental controls and energy management systems, including equipment, materials, installation, start-up, testing, documentation and training according to construction documents. The project drawings establish the scope of HVAC controls work in conjunction with the scope of work indicated in Section 23 0900: HVAC Instrumentation and Controls. This Section complements the requirements of Section 23 0900, and construction drawings for controls and system communications.

B. Related Requirements:

1. Division 01: General Requirements.
2. Section 01 4523: Testing and Inspection.
3. Section 01 7900: Maintenance and Operations Staff Demonstration and Training.
4. Section 01 9113: General Commissioning Requirements.
5. Section 21 1313: Fire-Suppression Sprinkler Systems.
6. Section 23 0500: Common Work Results for HVAC.
7. Section 23 0513: Basic HVAC Materials and Methods.
8. Section 23 0800: HVAC Systems Commissioning.
9. Section 23 0813: Environmental Controls and Energy Management Systems Commissioning.
10. Section 23 3000: Air Distribution.
11. Section 23 8000: Heating, Ventilating and Air Conditioning Equipment.
12. Section 26 0500: Common Work Results for Electrical.
13. Section 26 0513: Basic Electrical Materials and Methods.
14. Section 26 0519: Low-Voltage Wires (600 Volt AC).
15. Section 26 0526: Grounding and Bonding.
16. Project Commissioning Plan (CxP).

1.02 REFERENCES

A. The latest version of applicable codes, standards, and references. Inspections and tests shall be in accordance with the following applicable codes and standards, except as provided otherwise herein.

1. International Electrical Testing Association – NETA.

2. National Electrical Manufacturers Association – NEMA.

3. American Society for Testing and Materials – ASTM.

4. Institute of Electrical and Electronics Engineers – IEEE.

5. American National Standards Institute – ANSI.

6. National Electrical Safety Code – NESC.

7. California Building Code – CBC.

8. California Electrical Code – CEC.

9. California Mechanical Code – CMC.

10. Insulated Cables Engineers Association – ICEA.

11. Occupational Safety and Health Administration – OSHA.

12. National Institute of Standards and Technology – NIST.

13. National Fire Protection Association – NFPA.

14. American Society of Heating, Refrigerating, and Air-Conditioning Engineers – ASHRAE
(The HVAC Commissioning Process, ASHRAE Guideline).

15. International Building Code – IBC.

16. International Mechanical Code – IMC.

17. InterNational Electrical Testing Association (NETA) Acceptance Testing.

1.03 SUBMITTALS

A. Provide in accordance with Division 01 and Section 23 0500: Common Work Results for HVAC.

B. Shop Drawings shall include but not limited to:

1. Cover page with legend, common notes, symbol schedule, and drawing index.

2. Complete point to point environmental controls and energy management network communication diagram(s) for Distributed Digital Controls (DDC) of each system:

a. Identify all components.

b. Indicate conduit and wire characteristics, sizes and quantities.

c. Provide bill of materials.

3. Floor plans showing control panels and intercommunication wiring.

a. Show system(s) interface connections.

4. Valve Schedules where required.

5. Operations and Maintenance Manuals.

6. As-built submittal drawings.

7. Installation Instructions of each control device.

8. PC Workstation.

9. Software flow diagram of each unique system sequence of operation.

10. Software licenses and electronic keys.

11. Supplemental local or factory training schedule for post warranty support.

12. A complete list of recommended spare parts with pricing for the Owner's use in keeping the environmental control system downtime to a minimum.

13. Composite CD-ROM with AutoCAD drawings in a ".dwg" format.

1.04 QUALITY CONTROL

A. Contractor shall have adequate experience installing systems of similar size and complexity with the control product line proposed for this project.

1. Qualifications of Installer: Minimum five years experience installing products and systems of similar scope and complexity.

2. Installer shall submit certification from the equipment manufacturer indicating that installer is an authorized representative of the equipment manufacturer and is trained on network applications.

3. Installer shall maintain a fully equipped service organization capable of furnishing repair service to the equipment and shall maintain a spare set of major parts for the system at all times.

4. Installer shall furnish a letter from manufacturer of equipment certifying equipment has been installed according to factory standards and that system is operating properly.

5. Contractor shall have completed and commissioned a minimum of 10 service agreements that provide similar support services to those needed for this project.

6. System startup and testing shall be performed under the direct observation of the Project Inspector and OAR.

B. Materials and equipment installed shall be new.

C. System installation shall not begin until Shop Drawings are submitted and reviewed by the Architect or Engineer of Record.

D. Components for Direct Digital Control (DDC) shall comply with ASHRAE standards.

E. The installer shall provide the system components required by code and for the life safety of the service personnel.

F. System shall be able to interface with open protocol BACnet systems.

G. Provide components required by code for the system to perform the required sequence of operations. Install, test and adjust the system accordingly.

H. System components shall operate per industry standards. The standards shall be as defined by ASHRAE, SMACNA, AABC, NEBB, TABB, and the literature of the manufacturers listed in this Section.

I. Provide Field Engineering Tools for user modification of the system.

1.05 WARRANTY

A. Components, system software, and parts shall be guaranteed against defects in materials, fabrication, and execution for three years from date of system acceptance. Provide labor and materials to repair, reprogram, or replace components at no charge to the Owner during the warranty period. Corrective software modifications shall be updated on user documentation and archived software disks.

B. The Installer shall provide one year labor warranty.

C. Provide a list of applicable warranties for equipment and components, this list shall include warranty information, names, addresses, telephone numbers, and procedures for filing a claim and obtaining warranty services.

D. Respond to the Owner’s request for warranty service within four hours during normal business hours. Submit records of the nature of the call, the work performed, and the parts replaced or service rendered.

1.06 TRAINING

A. Provide a competent instructor who is factory trained and has comprehensive knowledge of system components and operations to provide full instructions to designated personnel in the system operation, maintenance, and programming. Training shall be specifically oriented to installed equipment and systems.

1. Provide four hours of onsite owner familiarization and training for the installed system. Training shall include system overview, time schedules, override commands, emergency operation, and programming and report generation. Owner employees attending this training session shall be provided with the following documentation:

    a. System layout point to point connection diagram.

    b. System components cut sheets.

    c. Operations and maintenance data.

2. Programmer and maintenance training shall include database entry; trend logs application programs, diagnostic routines, reporting, failure recovery and calibration.

    a. Provide a 16 hours training session as follows:

        1) Training session shall accommodate a minimum of 20 personnel and be facilitated at a location no more than 50 miles from the Project Site. Obtain Owner's approval for training locations exceeding 50 miles. In such cases, the Contractor shall be responsible for transportation expenses.

        2) Training shall cover instruction, theory, and expose the trainees to system's features, components, architecture, operations, programming, report generation, communications, and any other pertinent information required for the operations and maintenance of the system.

        3) Instructor(s) shall give the trainees the opportunity to practice on a simulated or actual (installed) system.

        4) The training session shall cover, but not be limited to the following instruction modules or sessions:

            a) System Architecture:

                (1) System layout and components interrelations and hierarchical structure.

                (2) Controllers interfacing and functions.

                (3) Server functionality and data management, error messages, and alarm conditions.

                (4) Connectivity and communication losses.

            b) User Operations:

                (1) Familiarization and navigation with the EMS operating System.

(2) Window panes, menus, navigation buttons, alarm response windows, system passwords and accessibility features and options, monitoring and managing data points (inputs, outputs, numeric values, time and date, strings).

(3) Views: Provide sufficient information as to train staff on how and where to access programs, functions, adjust or alter diagnostic points and related data, override messages, reports and actions taken.

c) Trending: Setting trend(s) intervals, accessing data trends and history logs for diagnosis points or groups, and reporting. Working with trended data graphical displays, including but not limited to hiding points, setting display types and colors, viewing and setting scales.

d) Graphics: Standard symbols and color codes, graphics customization, how and where to access and manage the system with the graphic displays, including changing points and values, using HOA switches and viewing results, mapping to or with other graphic sources and functions, including groups, navigation, sequence of operations, and displays and reports.

e) Alarms: Reading and interpreting alarms, acknowledging and silencing alarms, routing and setting priorities, viewing and responding e-mailed and paged alarms.

PART 2 – PRODUCTS

2.01 ACCEPTABLE MANUFACTURERS

A. Environmental controls and energy management systems shall be approved products of Alerton, Automated Logic, Honeywell, Johnson Controls, TAC, Trane, Carrier, or equal.

2.02 SYSTEM ARCHITECTURE

A. The system shall be capable of providing a peer-to-peer network of distributed stand-alone DDC controllers that meet ANSI/ASHRAE Standard 135 for open protocol communications.

B. The primary network communications bus for DDC systems shall be industry standard Ethernet protocol operating at 100MBPS. Secondary bus configuration shall be MS/TP with a minimum speed of 38Kb. A maximum of 32 controllers shall be connected to any one MS/TP bus.

C. The supplied computer software shall employ object-oriented technology (OOT) for representation of data and control devices within the system. For each global, system or unitary controller, provide a PICS document showing the installed device's compliance level. Minimum compliance is Level 3 with the ability to support data read and write functionality.

D. Maximum acceptable response time from any alarm occurrence (at the point of origin) to the point of annunciation shall not exceed three seconds for network connected controllers or user interfaces.

E. Projects requiring standalone controls shall not include workstations or DDC network controllers.

F. The system shall be able to interface with subsystems that utilize ANSI/CEA-709.1: Control Network Protocol Specification.

2.03 USER INTERFACE WORKSTATION

A. The Operator Workstation shall include a computer with an Intel processor, keyboard, mouse, 24 inch LCD color display and the latest version of Microsoft Windows operating system software. The workstation shall connect to the network through an internal 10/100MBPS Ethernet interface card. Provide a Graphical User Interface (GUI) application program for intuitive operation of the network system.

B. Software licensing shall be provided for local or remote unlimited simultaneous users of the system, unlimited future point expansion, user graphical display generation and non-vendor controllers. Licenses and electronic keys shall be included with the M&O manuals for project acceptance. Conditional Licenses will not be acceptable.

C. The system shall be programmed to email selected alarms to designated response personnel.

D. Provide a Web Server to automatically convert system displays on the workstation to an Internet page readable from standard PC browsers. The server shall be a separate device to provide security protection for the building system from outside hackers.

1. Coordinate individual system components IP addresses, switch port assignments, security settings such as but not limited to SNMP alarm delivery, HTTPS/SSL settings, VLAN assignment and authorized IP address ranges with the Owner's Information Technology Division. Coordination activities with ITD shall be executed through the OAR.

2. Provide IP address label on the interior of each cabinet door or equipment.

3. The system shall support the ability to notify school or Owner designated personnel by SMS or Email messages, utilizing the Owner's mail server when problems or situations that require immediate attention arise.

E. Operator Workstation shall display data associated with the project as called out on drawings or object type list supplied. Graphic files shall be created using digital, full color photographs of system installation, AutoCAD or Visio drawing files of field installation drawings and wiring diagrams from as-built drawings. Operator's workstation shall display data using three-dimensional graphic representations of mechanical equipment. System shall be capable of displaying graphic files, text, trend data and dynamic object data together on each display screen with animation of equipment operation.

F. Controllers shall be programmed using graphical software tools that allow connection of function blocks for visual sequencing of control logic. Function blocks shall display real time data and be animated to show status of data inputs and outputs when in real time operation. Animation shall also show change of status on logic devices and countdown of timer devices in a graphical format.

G. Operator Tracking Log shall record operator changes to the system for future review. This shall include, but not be limited to setpoint changes, time schedule overrides, alarm limits, etc.

H. The system shall be equipped with a battery back-up source capable of providing 30 minutes of operation (computer and monitor) in the absence of normal power, to allow for an orderly shut down and data back-up.

2.04 GLOBAL CONTROLLER

A. Building controllers shall incorporate the functions of a 3-way BACnet router. Controller shall route BACnet messages between the high-speed LAN (Ethernet 100MHz), master slave token passing (MS/TP) LANs, a point-to-point (PTP/RS-232) connection and telephone modem.

B. Provide global control strategies for the system based on information from any point objects in the system. Programming shall be object-oriented using graphical control function blocks. Global strategies shall include, but not limited to unit scheduling, electrical demand limiting, optimized start-stop of equipment, central plan reset control, etc.

C. Battery shall retain static RAM memory and real-time clock functions for a minimum of 1.5 years (cumulative). Battery shall provide up to five minutes of powerless operation for orderly shutdown and data backup.

D. Each building controller shall support a minimum of 250 BACnet Schedule Objects and 250 BACnet Calendar Objects.

E. Each building controller shall log a minimum 1,000 trend logs. Any point object in the system (real or calculated) may be logged. Sample time interval shall be adjustable at the operator's workstation. Building controller shall periodically upload trended data to networked operator's workstation for long term archiving if desired. Archived data shall be available for use in third-party spreadsheet or database programs.

F. Alarms may be generated within the system for any object change of value or state either real or calculated. This includes events such as analog object value changes, binary object state changes and various controller communication failures. Each alarm may be automatically dialed out to a telephone pager or emailed to any Internet PC computer.

G. Provide a 1.5 KVA UPS with battery back-up capability to provide a minimum of 30 minutes of operation (computer and monitor) for orderly shutdown and data backup. Make connections and test the system for proper operation in the presence of the Project Inspector.

H. The global controller shall be equipped with electrical demand limiting capacity interface features capable of receiving KW demand pulse signals from the facility utility meter.

1. The system shall include a demand-limiting program with at least two types of load shedding. The following options shall be available:

a. Shed/Restore equipment in digital format. It shall include at least 5 priority levels of equipment shedding. Load shedding on a given priority level shall include two methods. In one the loads shall be shed and

restored in a “first-off/first-on” mode and in the other; the loads shall be shed/restored in a linear fashion.

b. Adjust operator selected control setpoints in analog format based on energy usage when compared to shed and restore settings.

c. Shedding may be implemented independently on each and every zone or piece of equipment connected to the system.

d. Status of every load shed shall be capable of being displayed on every operator terminal connected to the system. Statuses shall be displayed along with the English description of each load.

2.05 APPLICATION (system and unitary) DDC CONTROLLERS.

A. Application controllers shall include universal inputs with 10-bit resolution that accept 3K and 10K thermistors, 0 to 10VDC, 0 to 5 VDC, 4 to 20 mA and dry contact signals. Any input on a controller may be either analog or digital with a minimum of three inputs that accept pulses. Controller shall also include support and modifiable programming for interface to intelligent room sensor with digital display. Controller shall include binary and analog outputs on board. Analog outputs shall be switch selectable as either 0–10VDC or 0–20mA. Software shall include scaling features for analog outputs. Application controller shall include a supply voltage to power external sensors.

B. Program sequences shall be stored in EEPROM or flash memory. No batteries shall be needed to retain logic program. Controller shall execute program sequences 10 times per second and be capable of multiple PID loops for control of multiple devices. Calculations shall be completed using floating-point math. Programming of application controller shall be completely modifiable in the field over the installed BACnet LANs or remotely via modem interface.

C. Central Plant Controllers shall interface to chiller gateways. Point objects shall reside in the central plant controller. Hand-Off-Auto switches shall be provided for direct wired output control circuits.

D. Controllers for VAV boxes shall include one onboard airflow sensor microprocessor driven and pre-calibrated at the factory. Pre-calibration shall be at 16 flow points as a minimum. Factory calibration data shall be stored in EEPROM. Calibration data shall be field adjustable to compensate for variations in VAV box type and installation. Calibration parameters shall be adjustable through intelligent room sensor. Operator workstation, portable computers and special hand-held field tools shall not be needed for field calibration. Boxes shall be controlled using pressure independent control algorithms and flow readings shall be in CFM

E. Controllers for Dual Duct boxes shall include two onboard airflow sensors and function similar to the VAV box controller. Multiple VAV box controllers or controllers with remote airflow sensors are not acceptable.

2.06 TEMPERATURE SENSORS

A. Temperature sensors shall be 10K ohm thermistor factory-calibrated to within 0.5 degrees F, totally interchangeable with housings appropriate for the application.

B. Wall sensors shall be installed 48 inches above finished floor. Duct sensors to be installed such that the sensing element is in the main air stream. Immersion sensors to be installed in wells filled with thermal compound. Outside air sensors shall be installed away from exhaust or relief vents, not in an outside air intake and in a location that is in the shade most of the day.

2.07 CURRENT SWITCH

A. Current sensing switch shall be self-powered with solid-state circuitry and a dry contact output. A multi-turn setpoint adjustment shall set the trip point status. An LED shall indicate the on or off status.

2.08 CONTROL RELAY

A. The relay shall be contained in a plenum rated NEMA 1 enclosure with a ½" NPT conduit fitting. Coil voltage shall be 24 or 120 VAC with a contact rating of 10A. An LED on the enclosure cover shall indicate the relay is energized.

2.09 ENCLOSURES

A. Controllers, power supplies and relays shall be mounted in dedicated NEMA enclosures when located in a clean dry indoor environment. Indoor enclosures shall be NEMA 12 when installed in other than a clean environment.

B. Enclosures for outdoor applications shall be rated NEMA 3R and be mounted on the north exposure of the controlled unit.

C. Enclosures shall have hinged, locking doors with common keying for control panel on the Project Site.

D. Enclosures shall have permanently affixed to the door an engraved nametag identifying the equipment served. The nametag shall be a minimum 1 inch by 3-inch with ½ inch lettering.

PART 3 – EXECUTION

3.01 CONTROLS INSTALLATION

A. Wiring methods for control system shall be as defined in the Division 26 specifications. Wire types shall conform to manufacturers' recommendations.

B. Mount control panels adjacent to associated equipment on vibration-free walls or freestanding angle iron supports. One cabinet may accommodate more than one system in same equipment room. Control panel assemblies must be UL listed.

C. Provide software and hardware required to provide controls and monitoring of diagnostic points indicated in specification Section 23 8000.

D. Coordinate with Division 26 electrical installer so that "Hand/Off/Auto" selector switches are installed to override automatic interlock controls when switch is in the "Hand" position. Safety shutdown interlock wiring shall disable the equipment regardless of the position of the H-O-A switch.

3.02 ROOM SENSORS INSTALLATION

A. Room sensors shall be wall mounted at a 48-inch height above finished floor. Room sensors are not permitted on outside walls, at chalkboards, between shelving, in recesses or above heat producing equipment. Coordinate with Division 26 for sensor or thermostat mounting adjacent to light switches.

3.03 COORDINATION

A. Coordinate the work with other aspects of mechanical, electrical, fire-life safety and security systems, and photo voltaic systems to obtain a complete and operating system in accordance with the contract documents.

B. Meet with the OAR and school principal and other school staff to determine when each zone or building will be occupied so scheduling of the operation of heating, ventilating and air conditioning equipment may be provided at the proper times.

3.04 DDC CONTROL SYSTEM ADJUSTMENTS

A. Make adjustments under operating conditions to provide sequence of operation for each control system per design intent. If required operating conditions cannot be obtained prior to completion date of the contract due to outdoor seasonal temperatures, return to the job site when requested by the Owner and re-adjust control system when outdoor temperatures will permit proper operating conditions. Start re-adjustment within seven calendar days after notification.

3.05 PERFORMANCE AND ACCEPTANCE:

A. Test and calibrate each device including but not limited to the following for proper operation, connection, signal value or response.

1. Building Controllers.
2. Custom Application Controllers.
3. Application Specific Controllers.
4. Input / Output Devices. (Sensors, actuators and monitoring devices)
5. Operator Interfaces.

B. Verify that systems are standalone and operable upon network failure.

C. Verify that systems return to normal operation automatically upon resumption of network operation or return of power.

D. Test each system for functions of the required control sequence of operation either by normal control operation or forced operation as required. Log and submit results.

E. Test the network for connectivity, data transmission rates, input/output responses, and other appropriate parameters Failure modes, including network failure, individual control system failure, and power outages, shall be simulated and responses logged, with any effects on network operation noted and corrected.

F. Test each preprogrammed time and holiday schedule.

G. Commissioning requirements of Divisions 01, 23, and 26 apply to this Section.

H. Schedule of Responsibilities: Refer to Appendix A. The schedule identifies the responsibilities of the Contractor for the installation of the environmental controls and energy management system. Deviations and clarifications of this schedule only if allowed by the OAR, provided trade contractor coordination and schedule requirements are met. Submit a record copy of the Schedule of Responsibilities to the OAR at the commencement of this Section's Work.

3.06 WIRING AND INFRASTRUCTURE

A. Provide necessary wiring, terminations, connections and conduit infrastructure for the complete system as indicated in the construction documents.

B. Exterior cables whether above or below ground level shall be rated for exterior applications. When entering a building provide a code sized pull box with necessary hardware to transition exterior rated cables to interior applications.

C. Underground EMS cables are permitted to be installed with lighting control wiring in underground applications. Provide innerduct to separate EMS cables from lighting control system cables.

3.07 DATA LOGGING REQUIREMENTS

A. The system must be capable of storing the system's collected and diagnosis data for a minimum of seven days.

B. Program the system for a standard seven day schedule including holydays.

3.08 CLEANUP

A. Remove rubbish, debris and waste materials and legally dispose of off Project Site.

3.09 PROTECTION

A. Protect Work of this Section until Substantial Completion.

END OF SECTION

APPENDIX A

SCHEDULE OF RESPONSIBILITIES

	ITEM	FURNISH BY	INSTALL BY	POWER BY	CONTROL WIRING BY
1	Magnetic Motor Starters:				
	a. Automatic controlled, with or without HOA switches.	E	E	E	DDC
	b. Manually controlled	E	E	E	N/A
	c. Manually controlled furnished as factory wired unit equipment	M	M	E	E
	d. Special duty type (part winding, multi-speed, etc.)	M	See Note 1	E	See Note 1
	e. Adjustable frequency drives with or without manual bypass.	DDC	E	E	DDC
	f. Domestic booster pump. Motor Controls	M	M	E	See Note 2 DDC
2	Line voltage contactors.	E	E	E	DDC
3	Control relay transformers (other than starters).	DDC	DDC	E	DDC
4	Control and Instrumentation panels	DDC	NI	E	DDC
5	Automatic control valves, automatic dampers and damper operators, solenoid valves, insertion temperature and pressure sensors including wells	DDC	M	E	DDC
6	Control interlock wiring between chillers, pumps, cooling towers, fans and air handling units and other miscellaneous mechanical equipment.	DDC	DDC	E	DDC
7	Duct Smoke Detectors	E	M	E	E
8	Dampers				
	a. Control Dampers	M	M	N/A	DDC
	b. Smoke Dampers and Combination Fire/Smoke Dampers	M	M	E	E
9	Airflow Stations with transmitter.	M	M	E	DDC
10	Air terminal devices (I.e., VAV and fan powered boxes).	M	M	E	DDC
11	Intelligent Devices and Control Units provided with packaged mechanical equipment such as: Large VAV and constant volume package units Boilers and Chillers.	M	M	E	NI
12	Intelligent Devices and Control Units not provided by equipment manufacturer such as: Air handling units, Heat pumps, AC units (small < 20 tons), Air terminal units (VAV boxes)	DDC	DDC	E	DDC
13	Intelligent Devices and Control Units provided with electrical systems such as: Occupancy / motion sensors, Lighting Control Panels, Switches and dimmers, Switch Multiplexing Control Units, Door Entry Control Units.	E	E	E	DDC
14	Gateways for proprietary non-BACnet equipment	M	M	E	DDC
15	Communications network devices such as Routers, Bridges and Repeaters.	DDC	DDC	DDC	DDC

Abbreviations	
DDC	DDC Contractor (controls contractor)
M	Mechanical Contractor
E	Electrical Contractor
N/A	Not Applicable

Notes:

1. Magnetic motor starters (special duty type) shall be set in place under electrical division except when part of factory wired equipment, in which case they shall be set in place under mechanical division.
2. Where a remote motor disconnect is required in addition to the one provided integral to a Variable Frequency Drive (VFD), controls contractor shall provide the necessary control interlock between the disconnects.

SECTION 23 30 00

AIR DISTRIBUTION

PART 1 – GENERAL

1.01 SUMMARY

A. Section Includes: Provide ductwork and appurtenances required for a complete air transmission and distribution system for the heating, ventilating, and air conditioning systems indicated on Drawings and as specified.

B. Related Requirements:

1. Division 01: General Requirements.

2. Section 09 9000: Painting and Coating.

3. Section 23 0500: Common Work Results for HVAC.

4. Section 23 0800: HVAC Systems Commissioning.

5. Section 23 0513: Basic HVAC Materials and Methods.

6. Section 23 0548: HVAC Sound, Vibration and Seismic Control.

7. Section 23 0700: HVAC Insulation.

8. Section 23 0900: HVAC Instrumentation and Controls.

9. Section 23 0923: Environmental Control and Energy Management Systems.

10. Section 23 8000: Heating, Ventilating and Air Conditioning Equipment.

1.02 SUBMITTALS

A. Provide in accordance with Division 01 and Section 23 0500: Common Work Results for HVAC.

B. Manufacturer's Data:

1. Complete list of items to be furnished and installed under this Section. Material lists that do not require performance data shall include manufacturer names, types and model numbers.

2. Manufacturer's specifications and other data required to demonstrate compliance with specified requirements.

3. Literature shall include descriptions of equipment, types, models, sizes, capacity tables or curves marked to indicate performance characteristics, electrical requirements, options selected, space requirements, including allowances for servicing, and other data. Data shall include name and address of nearest service

and maintenance organization that regularly stocks repair parts. Listings of items that function as parts of an integrated system shall be furnished at one time.

4. Submit complete acoustical test reports showing that proposed products have been tested in accordance with latest editions of relevant ASHRAE and AHRI Standards (ANSI/ASHRAE Standard 70 for air inlets and outlets; ANSI/ASHRAE Standard 130 and AHRI 880 for terminal units) and will be suitable for operation in Project spaces with specified maximum noise criteria (NC) requirements. The results of all testing shall be certified by an independent testing agency and submitted to the Architect for approval. The submittal shall include a complete description of the test conditions, methods and procedures.

5. Submittals shall include a tabulation of proposed products, identification of Project spaces where proposed products are to be installed, maximum allowable NC for all Project spaces, and product NC (at specific design air volume) for all Project spaces.

6. Shop Drawings: Shop Drawings indicating methods of installation of equipment and materials, sizes and gages of ducts, and details of supports. Items to be covered shall include but not be limited to following:

   a. Layout of ductwork and equipment drawn to scale to establish that equipment will fit into allotted spaces with clearance for installation and maintenance. Indicate proposed details for attachment, anchoring to, and hanging from structural framing of building. Indicate vibration isolation units, foundations, supports, and openings for passage of pipes and ducts.

   b. Drawings indicating locations and sizes of sleeves and prepared openings for pipes and ducts.

   c. Typical details of supports for equipment and ductwork.

1.03 QUALITY ASSURANCE

A. Installer's and Manufacturer's Qualifications: Comply with provisions stated under Section 23 0500: Common Work Results for HVAC.

B. Sound power level measurements and Manufacturers' NC value calculations shall be conducted in complete accordance with the latest version of ANSI/ASHRAE Standards 70 and 130 and AHRI 880.

1.04 PRODUCT HANDLING

A. Protection, Replacements, Delivery and Storage: Comply with provisions stated in Section 23 0500: Common Work Results for HVAC.

1.05 COORDINATION

A. Coordinate activities in accordance with provisions of Section 23 0500: Common Work Results for HVAC.

PART 2 – PRODUCTS

2.01 GENERAL

A. Unless otherwise noted, provisions, including amendments thereto, of the HVAC Duct Construction Standards of Sheet Metal and Air Conditioning Contractor's National Association (SMACNA) and the California Mechanical Code (CMC), are hereby made part of this Section.

B. Rectangular, round and flat oval ducts shall be manufactured and installed in accordance with requirements of the HVAC Duct Construction Standards – Metal and Flexible of SMACNA.

C. Sheet metal ducts shall be fabricated from galvanized steel, aluminum or stainless steel.

D. Galvanized steel ducts shall be fabricated of galvanized steel sheet, lock forming grade, conforming to ASTM A653 and A924.

E. Galvanized steel ducts gage thickness and permissible joints and seams of concealed ductwork shall conform to requirements in HVAC Duct Construction Standards – Metal and Flexible of SMACNA and the CMC unless noted otherwise on the drawings. The more stringent requirements shall prevail. Galvanized steel ducts gage thickness and permissible joints and seams of exposed ductwork shall conform to requirements in Tables 2 and 3, Minimum Metal Gages, of this Section. When more stringent requirements are noted on the drawings the most stringent requirement shall prevail.

F. Button punch snap-lock seams, using Lockformer or equal, shall be permitted only in concealed areas using 20 and 22 gage galvanized steel ducts with screws added at the ends. Button punch snap-lock is not permitted for aluminum or duct lighter than 22 gage.

G. Ducts shall be reinforced in accordance with SMACNA standards: Cross-broken Duct: Duct sizes 19 inches wide and larger which have more than 10 square feet of unbraced panel shall be beaded or cross-broken. This requirement is applicable to 20 gage or less thickness and 3 inches w.g. or less pressure. For details, refer to SMACNA manual.

H. Round and Oval Galvanized Steel and Aluminum Ducts:

1. Round Spiral Ducts and Fittings: Fabricated from galvanized sheet steel shall be machine-formed spiral pipe with sealed spiral locking joints. Fittings shall be furnished with continuous corrosion-resistant welds. Provide gages of ducts and fittings recommended by manufacturer.

2. Details of seams and transverse joints for round duct and fittings shall conform to SMACNA standards.

3. Flat oval ducts shall be provided as indicated on the Drawings. Reference standard details in SMACNA manual.

4. Minimum duct wall thickness for concealed flat oval duct construction shall conform to requirements in HVAC Duct Construction Standards – Metal and Flexible of SMACNA and the CMC. The more stringent requirements shall prevail. Gage thickness and permissible joints and seams of exposed ductwork shall conform to requirements in Table 1, of this Section.

5. These provisions apply for ducts furnished for indoor comfort heating, ventilating and air conditioning service only.

I. Flexible Ducts

1. Flexible duct shall be non-metallic, insulated for conditioned air supply and return. The flexible ducts shall be factory fabricated with exterior reinforced laminated vapor barrier, 1 ½-inch thick fiber glass insulation (K = 0.25 at 75 degrees F), encapsulated zinc-coated spring steel wire helix and impervious, smooth, non-perforated interior vinyl liner and factory fabricated steel connection collars. For the composite assembly, including insulation and vapor barrier, comply with NFPA Standard 90A or 90B and tested in accordance with UL Standard, UL 181. Non-insulated metallic ducts shall be provided for exhaust only.

2. Methods of installations, standards for joining and attaching, and supporting flexible duct shall conform to applicable provisions of SMACNA manual.

3. Specifications herein shall not supersede installation requirements by flexible duct manufacturer if those are more stringent.

J. Aluminum Ducts:

1. Material for aluminum duct shall be of 3003-H14 alloy aluminum sheets, with such designation embossed or stenciled on each sheet. Minimum tensile strength shall be 19,000 psi.

2. Aluminum duct gage thickness and permissible joint and seams shall conform to Table 1, Construction Details for Rectangular ducts, in this Section.

3. Aluminum ductwork shall be furnished to transport moisture-laden air from shower rooms, shower drying rooms, dishwashers and discharge ducts from evaporative condenser and cooling towers.

4. Unless otherwise noted, follow construction details for steel construction standards as indicated for unreinforced duct, reinforced duct, or cross-broken duct.

5. Button punch snap-lock seams on aluminum ducts are not permitted.

K. Fittings and Other Construction Details: Details of fittings such as elbows, turning vanes, branch take-off and connections, duct access doors, connections for grilles, registers and ceiling diffusers, flexible connector at fan, etcetera, shall conform to applicable provisions of this Section or SMACNA manual.

L. Duct Seam and Joint Sealant: Provide sealant or tape for metal ducts at duct joints which are defined as transverse joints between duct sections including girth joints, branch and sub-branch intersections, duct collar tap-ins, fitting subsections, louver and air terminal connections, access doors and frames, and abutments to building structure. Also provide the same at duct seams which are defined as longitudinal joint between duct sections. Spiral lock seams in factory fabricated round or oval ducts are excluded.

1. Sealant for low-pressure ducts shall be: Design Polymerics DP1010 or DP1020, Childers CP-145A/CP-146 Chil-Flex, Foster's 32-19 Duct-Fas, Miracle-Kingco Glenkote Seal-Flex, Ductmate Industries PROseal or FIBERseal, or equal.

2. Provide sealing material for medium-pressure ducts as described in the SMACNA manual for those pressures.

3. Sealant materials shall comply with the flame spread and smoke developed rating of current CMC when tested in accordance with ASTM E84.

4. Sealant for exposed to weather ducts shall pass the Weather Resistance Test per ASTM G154 at 2000 hours QUV.

M. Restrictions:

1. Zinc-coated steel duct shall not be installed for ductwork transporting moisture-laden air. Flexible duct may only be furnished where specifically indicated on Drawings. Aluminum ducts shall not be installed for internal pressures above 2 inches of water.

2. Fiberglass duct is not permitted as a substitute for sheet metal duct.

2.02 ACOUSTICAL DUCT AND PLENUM LINERS

A. Duct liners shall conform to requirements of Section 23 0700: HVAC Insulation.

2.03 DAMPERS

A. Manually Operated Volume Control Dampers:

1. VD-1, Rectangular: Multi-blade type, opposed blade operation, 16 gage galvanized steel blades; center pivoted on 3/8 inch diameter steel trunnions; interlocking edges; dampers shall be in own angle frame, full duct size as indicated on Drawings; frame of minimum 16 gage steel channel construction. Provide with damper operator and axles positively locked to blade. Ruskin MD35, Pottorff MD-42, Greenheck MBD-15 or equal.

2. VD-2, Round: Frame shall be constructed of not less than 20 gage galvanized steel, blades of not less than 20 gage galvanized steel channel construction with factory neoprene seals, ½ inch diameter axle shafts and locking hand quadrant. Ruskin MDRS25, Greenheck MBDR-50, or equal.

3. VD-3, Oval: Frame shall be constructed of not less than 14 gage galvanized steel channels with factory blade seals of not less than 12 gage galvanized steel with not less than ½ inch diameter axle shafts. Provide Ruskin standard construction for frame, blade and axle size, thickness and material variation. Provide adjustable locking hand quadrant. Ruskin CDO25, or equal.

2.04 AIR DISTRIBUTION DEVICES

A. General:

1. Grilles, registers, diffusers and appurtenances shall conform to requirements specified herein and shall be of type and sizes as specified and indicated on Drawings. Performance shall be in accordance with ANSI/ASHRAE Standard 70 including airflow velocity, pressure, temperature, and sound measurements.

2. Sponge neoprene, rubber, vinyl or felt border gaskets shall be provided for surface-mounted registers, grilles or diffusers.

3. The noise generating characteristics of all specified grilles, registers, and diffusers shall be tested to, and comply with, all requirements of this specification. Representative samples shall be subjected to tests in accordance with applicable standards and procedures in order to demonstrate such compliance. A special test for this project is not required if the manufacturer has previous certified test results that can be made applicable to this project. Maximum Sound Levels of diffusers, grilles and registers shall be as follows:

Office area:	NC 30
Shower & lockers areas:	NC 30.

4. Provide suitable frame types to match the ceiling types as specified or indicated on the Architectural Drawings.

5. Ceiling diffusers shall be provided with equalizing grids.

6. Ceiling mounted grilles, registers and diffusers shall be provided with a factory applied, baked enamel, dull finish, bone white to match acoustical ceiling tile.

7. Grilles or registers mounted on painted walls or other surfaces shall be furnished with a baked prime coat and finish painted in accordance with Section 09 9000: Painting and Coating.

8. Do not provide opposed blade dampers at diffusers and registers to balance the airflow, as they tend to create noise. Provide a manual volume damper at each branch take-off and also at branch duct to each diffuser and register upstream of the flexible duct connections. Air throw patterns shall be as indicated on the drawings.

9. Diffusers, registers and grilles indicated or scheduled on the drawings to comply with special requirements shall take precedence over the standard items specified.

B. Ceiling Diffusers - Round, Square, Rectangular:

1. CD-1 For areas of less than 10 feet ceiling height only. Units shall be square or rectangular modular core type as indicated on the drawings. Anemostat QC Series, Krueger Model 1240, Price SMCD Series, or equal.

2. CD-2 For areas of higher than 10 feet ceiling height. Units shall be square or rectangular louver faced type. Anemostat D Series, Krueger Model SH, Price SMD/AMD Series, or equal.

C. Grilles - Return, Exhaust, Ceiling, Square, Rectangular:

1. GR-1 Acoustical Tile on Plaster Ceiling: Return and exhaust grilles shall be single deflection type with horizontal fixed face bars set at straight or 45 degree angle, ½ inch spacing and flush and flanged for surface mounting. Anemostat S3HD Series, Kruger Model S80/S85, Price 500/600 Series, or equal.

2. GR-2 Prefabricated Acoustical Tile Ceiling with Inverted Exposed T-Bars: Return and exhaust grilles shall be with single deflection horizontal fixed face bars, set at straight or 45 degree angle, ½ inch spacing and flush, lay-in panel type with nominal overall dimension of 24-inch by 24-inch. Anemostat Type SAC3L Series, Krueger Model S80/S85, Price 500/600 Series, or equal.

D. Registers, Supply, Return, Wall:

1. WR-1: Sidewall supply register shall be double deflecting type with loose key-operated opposed blade volume control. Anemostat S2 Series, Krueger Model 80/880, Price 500/600 Series, or equal.

2. WR-2: Sidewall return register shall be single deflecting type with horizontal fixed face bars set at 45 degree angle flush and flanged for surface mounting and complete with loose key-operated opposed blade volume control. Anemostat S3 Series, Krueger Model S80/S85, Price 500/600 Series, or equal.

PART 3 – EXECUTION

3.01 EXAMINATION

A. Examine areas and conditions under which Work of this Section will be performed. Correct conditions detrimental to proper and timely completion of Work. Do not proceed until unsatisfactory conditions have been corrected.

3.02 DUCTWORK

A. Construct ductwork according to details of fabrication and methods of support, as indicated in the SMACNA manuals and CMC, unless specified or indicated otherwise in this Section or on Drawings. In event of conflict, the most stringent requirement shall be provided.

B. Unless otherwise required, construct ducts to conform accurately to dimensions indicated and to be straight and smooth on inside, with joints neatly finished.

C. Duct dimensions indicated are net inside dimensions. If the indicated duct is to be furnished with an acoustic lining, add twice the thickness of the acoustic liner in both the duct width and height dimensions to provide the gross sheet metal duct dimensions.

D. Where aluminum is welded, provide a minimum thickness of 16 gage, and use gas inert tungsten process of welding.

E. Anchor ducts to building structural slab, framing and roof decking and detail method of anchoring and fastening if not indicated on Drawings. Supports shall be seismically constructed.

F. Construct and install ducts to be completely free from vibration under operating conditions.

G. Indicate on layout drawing, required for suspended ductwork, location of supports, loads imposed on each fastening or anchor, typical details for anchorage, and details for special anchorage for supports attached to metal roof decking.

H. Attach supports only to building structural framing members and concrete slabs.

I. Where supports are required between structural framing members, detail and install suitable intermediate metal framing.

J. Ducts transporting air-conditioned or heated supply air shall be insulated in accordance with requirements of Section 23 0700: HVAC Insulation.

1. Ducts exposed to weather shall be furnished with exterior insulation with weather jacket or interior lining as indicated on Table 2, Section 23 0700: HVAC Insulation.

K. Ferrous angles and structural members and joining collars specified for construction and support of ductwork and plenums shall be primed with one heavy coat of required asphaltic aluminum paint before installation or fabrication. Metal surfaces shall be thoroughly cleaned before installation of paint. Galvanizing may be provided instead of painting. Installed duct hanger rods concealed in furred ceilings and walls are not required to be primed or painted.

L. Broken places in galvanized coating shall be acid washed and then completely soldered over or painted with galvanizing paint.

3.03 DUCT CONSTRUCTION

A. Minimum ductwork gages, joints, reinforcing, and bracing of concealed ductwork shall conform to SMACNA and CMC. Exposed ductwork shall conform to the following tables in addition to SMACNA and CMC. The most stringent standards shall prevail. Hoods, plenums, and castings shall not be lighter than the duct gage listed in Table 2 for corresponding dimensions. Additional bracing shall be provided to prevent objectionable panel vibration.

B. Provide longitudinal seams of the grooved snap lock and standing, sealed and taped, or sealed spiral or continuously welded. For exhaust duct, taping may be omitted.

TABLE 1 - SHEET METAL THICKNESS FOR CIRCULAR DUCTS AND FLAT-OVAL (FOR STATIC PRESSURES LISTED)

Gage Thickness

2-inch Water Column	Diameter of Duct	Horizontal Girth	
Maximum S.P.	Maximum	Maximum	Joints
Round / Oval	Diameter Support	Distance	
26 / 24	Up to 9 inch	10-foot	2-inch slip
26 / 24	9 to 14-inch	8-foot	4-inch
24 / 22	14 to 23 inch	8-foot	4-inch
22 / 20	23 to 37-inch	8-foot	4-inch
20 / 18	37 to– 51-inch	6-foot	1 ¼-inch by 1 1/8-inch flange

C. Construction Details for Rectangular Sheet Metal Ducts for Low-Pressure Systems - Velocities not Exceeding 2,000 Feet Per Minute:

1. For pressures in excess of 2 inches water column, duct wall thickness shall be 2 gages heavier than set forth in this table.

2. Duct specifications shown below are applicable when ducts larger than 18 inches are cross-broken. Where cross breaking is not provided, duct wall thickness shall be 2 gages heavier on ducts 19 inches to 60 inches wide unless longitudinal standing seams are furnished.

TABLE 2 - MINIMUM METAL GAGES - UNREINFORCED RECTANGULAR DUCT
(2" W.G. OR LESS)

Minimum Gage Thickness Steel / Aluminum	Max. Side, Gross Dimensions	Duct Permissible Girth Joints	Horizontal Support Maximum Distance
26 / 24	Up to 10-inch	Drive-slip, plain S-slip, or 1 inch government lock	10-foot
24 / 22	11 to 12-inch	Drive-slip, plain S-slip, or 1 inch government lock	10-foot
22 / 20	13 to 14-inch	Drive-slip, plain S-slip, or 1 inch government lock	10-foot
20 / 18	15 to 18-inch	Drive-slip, plain S-slip, or 1 inch government lock	10-foot
18 / NA	19 to 20-inch	Drive-slip, plain S-slip, or 1 inch government lock	10-foot
16 / NA	21 to 24-inch	Drive-slip, plain S-slip, or 1 inch government lock	10-foot

TABLE 3 - MINIMUM METAL GAGES - REINFORCED RECTANGULAR DUCT
(2" W.G. OR LESS)

Reinforcement Ratings To Comply with SMACNA Standards			
Minimum Gage Thickness Steel / Aluminum	Max. Side, Gross Dimensions	Duct Permissible Girth Joints	Reinforcement Spacing Max. Distance
26 / 24	Up to 14-inch	Drive-slip, plain S-slip, or 1 inch government lock with B rated reinforcement	6'
24 / 22	13 to 18-inch	Drive-slip, plain S-slip, with C rated reinforcement	8'
	19 to 30-inch	Standing S/D -slip, 1 inch bar slip, or 1 inch government lock with E rated reinforcement	5'
22 / 20	31 to 36-inch	1 inch bar slip, reinforced bar slip, or 1 inch government lock with F rated reinforcement	5'
	37 to 48-inch	1 5/8-inch standing S or 1 inch government lock with G rated reinforcement	4'
20 / 18	49 to 54-inch	1 5/8-inch standing S or 1 inch government lock with H rated reinforcement or G rated tie rods	4'
18 / NA	55 to 84-inch	1 5/8-inch standing S or 1 inch government lock with I rated reinforcement or G rated tie rods	4'
	85 to 108-inch	2 ½-inch standing seam with K rated reinforcement or H rated tie rods	4'

* Button punch snap-lock seams, using Lockformer or equal, shall be permitted only in non-accessible areas using 20 and 22 gage galvanized steel ducts with screws added at the ends. Button punch snap-lock is not permitted for aluminum or duct lighter than 22 gage.

D. Ferrous angles and structural members and joining collars specified for the construction and support of ductwork and plenums shall be primed with one heavy coat of asphalt aluminum paint before installation or fabrication. The metal surface shall be thoroughly cleaned before application of the paint. Galvanizing may be provided instead of painting. Installed duct hanger rods concealed in furred ceilings and walls is not required to be primed or painted.

E. Broken places in galvanized coating shall be acid washed and then completely soldered over or painted with galvanizing paint.

F. S-type or drive-slip type girths or longitudinal seams shall not be furnished for ductwork installed outdoors or mounted on roofs.

G. Broken places in galvanized coating shall be acid washed and then completely soldered over or painted with galvanizing paint.

3.04 DUCTS AND PLENUMS WITH LINERS

A. Ducts and plenums lined with acoustical insulation shall be as indicated on Drawings.

B. Duct dimensions indicated on Drawings are net. Add thickness of acoustic liners to obtain gross sheet metal duct dimensions.

C. For duct liner specifications and installation, refer to Section 23 0700: HVAC Insulation.

3.05 DUCT ELBOWS AND TURNING VANES

A. Duct elbows, including supply, exhaust, and return, shall be provided with a centerline radius of 1.5 times duct width parallel to radius whenever possible; centerline radius shall not be less than width of duct parallel to radius.

B. Where space does not permit above radius, or where square elbows are indicated on Drawings, turning vanes shall be installed whether indicated on Drawings or not.

C. Turning vanes shall be thick double-wall vane type, Ductmate Industries PROrail, or equal. Duro Dyne vane rail system duct turns may be furnished, provided they are of thick double wall type and Shop Drawings are submitted and reviewed by the Architect. Duct turning vanes shall be of same material as ductwork and shall be rigidly fastened in ductwork.

3.06 DUCT JOINTS AND SEAMS

A. Conditioned air supply ducts shall be furnished with joints and seams sealed, taped or welded for air tightness, except spiral seam factory machine formed duct components. Spiral seam is exempted. Joints between slip-fit components may be assembled with all seams and joint connections fastened with screws and taped.

B. Other ducts shall be furnished with joints and seams sealed by using sealant, taping, soldering, or welding. Ducts for grease hood exhaust shall be furnished with grease-tight welding or brazing on external surface for joints and seams. Fiberglass ducts shall be provided with a thermally activated closure system, Johns Manville Fortifiber Therm-Lock with Automatic Bond Indicator dots, or equal.

C. S-slip or drive-slip type girths or longitudinal seams are not permitted on exterior or exposed rooftop mounted ductwork.

D. Caulking, taping, or other joint or seam treatment shall be provided in accordance with recognized standards.

E. Seams around fan, coil housing and plenums shall be sealed with gaskets or sealing compound to provide an airtight assembly.

F. Stainless steel ductwork connected to range hoods and fume hoods shall be provided with grease-tight, gas tight welded seams, and shall be constructed and installed so that grease or other material cannot become pocketed in any portion thereof, and system shall slope downward toward hood not less than 1/4 inch per lineal foot. Gasketed flanged joints with sealing compound shall be used only at fan and fume hood connections.

G. Alternative duct connectors such as Ductmate Industries, Mez Industries, or equal may be used if the following conditions are met:

1. One of the specifically listed connectors is submitted and approved by the Architect and OAR.

2. The correct size connector, application, and gage of material conform to SMACNA Standards.

3. The connector is installed per manufacturer's specifications.

3.07 DUCT TRANSITION

A. Slopes in sides of transition pieces shall be no greater than 1 to 5. Abrupt changes or offsets in duct system are not permitted, except when reviewed by the Architect.

3.08 DUCT TEST HOLES

A. Holes in ducts and plenums shall be provided for pilot or static tubes for obtaining air measurements to balance or check air systems. Holes shall be covered with neoprene gasketed sheet metal cover or plugged with a fitted neoprene plug chained to duct.

3.09 FLEXIBLE CONNECTIONS

A. At points where sheet metal connections are installed to fans or air handling units, or where ducts of dissimilar metals are connected, a flexible connection of commercial grade, Duro Dyne Durolon, Ventfabrics Ventglas, Ductmate Industries Proflex, or equal, non-combustible material shall be installed and securely fastened by zinc-coated steel clinch-type bands or a flange type connection. Inlet and outlet openings shall be axially in-line, maximum deviation of centerline shall be less than 5 percent of diameter or shortest dimension of a rectangular inlet of fan or air handling unit, with system at rest. Duct end of connection shall be seismically restrained if more than 4 feet from last support.

3.10 AIR TERMINAL DEVICES

A. General: Install supply devices after ducts, plenums, and casings have been cleaned and blown free of small particles, as specified. Devices shall be aligned to be parallel to ceiling construction or walls and ceiling surfaces, and shall be pulled tightly to compress gaskets and to fit neatly against surfaces.

B. Diffusers: Support surface mounted ceiling diffusers from angles or channels resting on and fastened to ceiling construction. Do not support from ducts. Install lay-in diffusers on T-bar ceilings with hanger wires from each corner and not supported by ceiling structure. Provide sheet metal adaptor box above each diffuser to allow space for volume controller with round collars for connection to round ducts where indicated on Drawings. Fasten duct-mounted diffusers to duct collars.

C. Registers and Grilles:

1. Install wall supply registers at least 6 inches below ceiling, unless otherwise indicated. Locate return and exhaust registers 6 inches below ceiling unless otherwise indicated.

2. Support ceiling diffuser type inlets, registers, and grilles as required above for ceiling diffusers.

3. Fasten wall mounted and duct mounted registers and grilles to flanges of duct collars.

3.11 DAMPERS

A. Manually operated dampers, gravity dampers, fire dampers, and motor operated dampers shall be furnished and installed as specified and indicated. Upon completion of installation, dampers shall be checked, lubricated, and adjusted so that they operate freely, without binding. Dampers shall be of standard commercial manufacture, complete with damper frame. Where painting is required, they shall be shop finished unless otherwise noted.

1. Provide and install manual volume dampers per SMACNA standards to allow balancing per AABC, NEBB or TABB Procedures and Standards whether indicated on the drawings or not.

2. Balancing dampers shall be installed in main supply ducts from fan discharge plenums, where two or more ducts are connected to each plenum, although such balancing dampers may not be indicated. Each zone shall be provided with a manual volume damper. Sheet metal screws shall be installed through handles and into ducts to lock damper in place after test and balance.

3. Each supply, return, and exhaust branch shall be provided with manual volume dampers.

4. Do not provide opposed blade dampers at air inlets and outlets.

5. Each supply, return, and exhaust inlet or outlet shall be provided with a manual volume damper. This damper shall be a minimum of 5 feet upstream of the air outlet and inlets. An acoustic flexible duct should be provided between the outlet and inlet and the damper for concealed ducts.

6. Dampers installed in accessible locations shall be provided with locking and indicating quadrants. Ventfabrics Ventlok, Duro Dyne, Young Regulator Co., or equal.

7. Dampers installed in ductwork in furred ceiling spaces or in roof spaces with less than 30 inches of clearance below beams, joists, or other construction, and where access panels are not provided shall be furnished with damper rods extended below ceiling and terminated with a concealed damper regulation. Ventfabrics Ventlok, Young Regulator Co., Duro Dyne, or equal.

8. Dampers not identified as splitter, extractor, or butterfly dampers shall be of multi-louver type arranged for opposed blade operation. Damper shall be same dimension as adjoining duct and be tight closing. Blades shall not be greater than 9 inches. Dampers shall be not less than 18 gage steel.

9. Motor operated dampers shall be furnished by temperature control manufacturer as part of temperature control equipment and shall conform to requirements of Section 23 0900: HVAC Instrumentation and Controls.

10. Dampers shall be provided with accessible operating mechanisms. Where operators are exposed in finished portions of building, operators shall be chromium-plated with exposed edges rounded. Splitter dampers are not permitted unless specified and reviewed by the Architect.

11. Dampers shall not be installed in combustion air ducts.

12. Access panels shall be installed for access at each damper's operating mechanism.

3.12 BACKDRAFT DAMPERS

A. Backdraft dampers shall be installed at locations indicated in accordance with the State of California Building Energy Efficiency Standards, Title 24, CCR.

3.13 DUCT SLEEVES AND PREPARED OPENINGS

A. Furnish duct sleeves for 15-inch diameter ducts or less passing through floors, walls, ceilings, or roof and install during construction of the floor, wall, ceiling, or roof. Install round ducts larger than 15 inches diameter and square and rectangular ducts passing through floors, walls, ceilings or roof through prepared openings. Provide duct sleeves and prepared openings for duct mains and duct branches.

B. Provide one inch clearance between duct and sleeve or between insulation and sleeves for insulated ducts, except at grilles, registers and diffusers.

C. Provide prepared openings for round ducts larger than 15 inches in diameter and for square and rectangular ducts with one inch clearance between duct and openings or between insulation and opening for insulated ducts, except at grilles, registers and diffusers.

D. Provide closure collar of galvanized sheet metal not less than 4 inches wide unless otherwise indicated on Drawings on each side of walls or floors where sleeves or prepared openings are provided except where grilles or diffusers are installed. Install collar tight against surface. Fit sharp edges of collar installed around insulated duct to preclude tearing or puncturing insulation covering vapor barrier. Fabricate collars from round ducts in steel. Provide not less than 4 nails to attach collar where openings are 12 inches in diameter or less and not less than 8 nails where openings are 20 inches in diameter or less.

E. Pack space between sleeve or opening and duct or duct insulation with commercial grade packing yarn.

3.14 FLEXIBLE DUCT RUNOUTS

A. Runouts from branches, risers or mains to air terminal units and outlets may be pre-insulated, factory fabricated flexible ducts complying with NFPA 90A. Flexible ductwork shall not exceed 7 feet in length. When required to suspend flexible ducts, furnish hangers of type recommended by manufacturers of pre-insulated flexible duct and install at intervals recommended. Method of attachment to other components of air distribution system for a vapor-tight joint shall be in accordance with printed instructions of flexible duct manufacturer. Bend radius shall be 1-1/2 times diameter of duct, measured from centerline. Bends greater than 90-degree angle are not permitted. Non-metallic flexible duct shall be permitted only in T-bar suspended ceilings.

3.15 DUCT HANGERS AND SUPPORTS

A. Exposed or easily accessible ductwork: Single horizontal ducts shall be suspended from heavy steel hanger straps securely fastened to overhead structural members. Ducts shall be supported by a hanger strap passing around and fastened to duct with not less than two Parker No. 10 screws set approximately 2 inches in from each edge, to form a supporting stirrup attached to overhead supports. Rectangular ducts shall be provided with two hanger straps, one located on each side of duct. Round ducts may be installed from a single hanger strap unless conditions require that duct be held tight against ceiling, in which case two hanger straps may be brought down each side of duct, oriented at right angles to axis of duct and securely fastened to duct standing leg seam or angle iron stiffener with a minimum of two bolts, measuring 1/4 inch, for each side of duct. Hanger straps shall be galvanized with a minimum size of 1 1/8-inch by 14 gage. Angles of galvanized steel of 1 1/8-inch by 1 1/8-inch by 16 gage (14 gage for ducts 60 inches or greater) may be furnished instead of straps.

B. Non-accessible ductwork: Non exposed and hidden from sight during regular school operations ductwork, rigid round, rectangular, and flat oval metal ducts, shall be installed with support systems conforming to SMACNA Standards.

C. Where ducts are installed one above the other, they shall be individually supported on a trapeze of steel angles with 3/8 inch supporting steel rods securely fastened to overhead construction. A minimum distance of 3 inches shall be maintained between ducts wherever possible, but in no event shall distance be less than 2 inches. Minimum sizes of steel angles shall be 1 ½-inch by 1 ½-inch by 1/8 inch for duct sizes through 60 inches in greatest dimension, 2-inch by 2-inch by 1/8 inch for duct sizes 61 inches through 84 inches, 2-inch by 2-inch by 3/16 inch for duct sizes 85 inches through 96 inches, and 2-inch by 2-inch by 1/4 inch for duct sizes over 97 inches.

D. Ducts 30 inches square area and greater and ducts 20 feet long and longer shall be seismically restrained. Refer to Section 23 0548: HVAC Sound, Vibration and Seismic Control.

E. Hangers shall not be supported by, or fastened to, non-structural members including blocking. Toggle or Molly type bolts are not permitted.

F. Vertical ducts shall be supported with suitable angles on each side of each duct located at each floor and at intervals not to exceed 8 feet. Angles shall be sized and installed according to SMACNA Standards for required span so that they will be rigid, without bending or sagging.

G. Roof-mounted ductwork shall be installed a minimum 12 inches above roof and shall be supported by galvanized welded pipe, one on each side, fastened to roof structure, flashed and sealed to roof membrane. Install supports at each turn, unit connections, and each penetration, and space at maximum 6 feet off-center in general. Pitch pockets are not allowed.

3.16 ACCESS PLATES AND DOORS

A. Access plates and doors shall be furnished and installed where stops, valves, fire dampers, fusible links, coils, damper operating mechanism, control equipment, lubrication fittings, air filters, air handling equipment and similar items normally requiring adjustment or servicing are installed in concealed spaces.

B. Access plates and doors shall be located to permit convenient access to equipment sized to permit removal of equipment for servicing. Access plates shall be no less than 12-inch by 12-inch in clear opening. Proper servicing of equipment requires adequate access for

maintenance personnel. Access doors shall not be less than 24-inches by 24-inch, unless otherwise detailed. Two or more valves shall not be located in same access area unless sufficient clearance is provided for operation, servicing and removal of each valve.

C. Openings in ducts or plenums whose longer dimension does not exceed 12 inches may be covered by a plate of same material as duct, gasketed and fastened to duct or plenum with sheet metal screws.

D. Access plates in floors shall not be less than 8-inch by 8-inch and shall be carborundum surface brass with cast brass frames anchored into concrete. Access plates in tile walls shall be chromium plated brass and polished. Serrated plates furnished as part of a clean-out assembly are permitted in floors instead of a separate plate.

E. Access plates and doors in walls and ceilings of finished rooms and in locations normally accessible to students shall be furnished with continuous piano hinges, unless otherwise specified, and a special flush type spring-loaded latch requiring an Allen wrench to operate. Access devices shall be installed after plastering in plaster ground openings.

F. Access panels or doors penetrating one-hour fire resistive ceilings shall meet code requirements for such openings.

G. Access panels shall be fire-rated; Milcor, or equal. Access doors shall be as required for installation in openings penetrating one-hour fire resistive ceilings. Access doors shall be furnished with a flush, key-operated cylinder lock, furnished with two keys each, instead of Allen headlock for non-rated ceilings.

H. Access panels that are part of an integrated ceiling are specified in Section 09 8433: Cementious Wood Fiber Acoustical Units. Identification markers shall be affixed to adjacent supports, under this portion of Work, to indicate location and type of mechanical device to be serviced.

I. Access panels installed in ducts or plenums located in heater or equipment rooms containing gas-fired equipment shall be furnished with heavy-duty spring closing hinges and refrigerator door type catches unless otherwise required. When these panels are intended for maintenance personnel access, catches shall be operable from both interior and exterior.

J. Other access panels, except those specified above, shall be furnished with suitable hinges and one or more sash fasteners.

K. Panels located in ducts and plenums shall be installed with gaskets made of synthetic rubber, felt, or similar material to provide an airtight installation. Panels shall be constructed and reinforced to prevent vibration.

L. Label the words "FIRE DAMPERS" on panels over fire dampers and words "DO NOT OPEN - HEATER IS OPERATING" on panels located in heater or equipment rooms. Letters shall be approximately 3 inches high, if space is available.

M. Furnish a key to operate latch access plates, one for each access plate, but not to exceed five keys for any one Project.

N. Access plates and panels shall be furnished with manufacturer's name or trade mark and model number cast or stamped thereon, or upon a label permanently affixed thereon.

O. Provide duct through roof flashing as detailed in the SMACNA standards or as indicated on Drawings.

P. Refer to SMACNA for access plate and door construction.

3.17 CLEANUP

A. Remove rubbish, debris and waste materials and legally dispose off the Project site.

3.18 PROTECTION

A. Protect the Work of this Section until Substantial Completion.

END OF SECTION

SECTION 23 80 00

HEATING, VENTILATING AND AIR CONDITIONING EQUIPMENT

PART 1 – GENERAL

1.01 SUMMARY

A. Section Includes: Air conditioning and air handling equipment including but not limited to:

1. Split system heat pump unit.

2. Infrared Radiant Heater

3. Fans.

B. Related Requirements:

1. Division 01: General Requirements.

2. Section 07 6000: Flashing and Sheet Metal.

3. Section 22 1000: Plumbing.

4. Section 23 0500: Common Work Results for HVAC.

5. Section 23 0513: Basic HVAC Materials and Methods.

6. Section 23 0548: HVAC Sound, Vibration and Seismic Control.

7. Section 23 0900: HVAC Instrumentation and Controls.

8. Section 23 0923: Environmental Control and Energy Management System.

9. Section 23 3000: Air Distribution.

1.02 DESIGN REQUIREMENTS

A. Work of this Section is based on HVAC equipment units indicated as Basis of Design in Part 2 of this Section. Products from different HVAC equipment manufacturers listed are never identical, although equivalent in capacity, performance and quality. In the cases where dimensions, weight, configuration and utility requirements differ from the products used as a basis of design, the Contractor, at no additional cost to the Owner, shall coordinate and submit, for Architect review, revisions to the design.

1.03 SUBMITTALS

A. Provide in accordance with Division 01 and Section 23 0500: Common Work Results for HVAC.

B. For products listed that are not the basis of design, submit the following in addition to above requirements:

1. Title 24 Calculations: Replace HVAC unit values in calculation files provided by the Architect and submit for review.

1.04 QUALITY ASSURANCE

A. Provide submittals in accordance with Section 23 0500: Common Work Results for HVAC.

1.05 PROJECT RECORD DOCUMENTS

A. Provide Owner instructions on equipment operation and maintenance procedures, as indicated in Section 23 0500: Common Work Results for HVAC.

1.06 WARRANTY

A. Compressors shall be provided with manufacturer's five year warranty, (replacement only).

B. Manufacturer shall warrant parts, except heat exchangers, for a period of five years.

C. Heat exchangers shall be provided with manufacturer’s ten year warranty, (replacement only).

PART 2 – PRODUCTS

2.01 EQUIPMENT

A. Capacities of air conditioning equipment indicated on Drawings are net capacities actually required. Standard catalog ratings shall be adjusted to actual Project site environmental conditions.

2.02 HEAT PUMP AND FAN COIL UNITS

A. Manufacturer: LG, Mitsubishi or Carrier Toshiba, or equal.

1. Basis of Design: [LG]

B. HP and matching indoor fan coil unit and condenser unit: Furnish heat pump, split type, air-cooled, roof or ground installation with ducted connections or free blow. Units shall be air-cooled heat pump/direct expansion fan coil combinations. Heat pump outdoor section shall be factory assembled and furnished with direct-drive condenser fans with horizontal or vertical air discharge, scroll type compressor, refrigerant coil, fan motors, pre-wired control panel. Unit shall also be provided with a fully piped refrigerant circuit, fully charged with an environmentally friendly refrigerant that is not scheduled for phase out. Provide additional refrigerant for extended lines. Indoor fan coil unit shall be furnished with horizontal discharge and will include evaporator coil, fan and motor, condensate pan with drain, thermal expansion valve, pre-wired control panel and remote thermostat control. Nominal unit cooling, heating capacities, electrical characteristics, and operating conditions shall be as indicated on Drawings.

C. Quality Assurance:

1. Cooling capacity rated in accordance with current AHRI Standard 210/240 and 270. Units shall be listed in AHRI.

2. Unit construction shall comply with ANSI/ASHRAE 15, latest revision, and with NEC.

3. Units shall be constructed in accordance with UL standards and shall carry UL label of approval. Units shall have CSA approval.

4. Units shall be listed in CEC directory.

5. Unit cabinet shall be capable of withstanding ASTM B117 500 hour salt spray test.

6. Air-cooled condenser coils shall be leak tested at 217 psig and pressure tested at 450 psig with coil submerged water.

7. Unit shall provide an EER/SEER/COP complying with CCR, Title 24, Building Energy Efficiency Standards and per the drawings.

D. Evaporator and condenser coils: Evaporator and condenser coils shall be copper with mechanically bonded, smooth aluminum plate fins. Tube joints shall be brazed with copper or silver alloy. Coils shall be pressure-tested at factory. Protective metal guard for inlet and outlet of outdoor coil.

E. Fans:

1. Condenser Fan and Motors: Condenser fan shall be high efficiency or ECM type motor direct driven, propeller type arranged for horizontal or vertical discharge. Condenser fan motors shall be furnished with inherent protection, and shall be permanently lubricated type, resiliently mounted for quiet operation. Each fan shall be furnished with a safety guard.

2. Evaporator fan section shall be furnished with high efficiency or ECM type motor centrifugal, forward curved, double width, double inlet fan or fans installed on a solid shaft. Fan shall be statically and dynamically balanced and shall rotate on permanently lubricated bearings.

F. Unit Cabinets:

1. Cabinets shall be fabricated of galvanized steel, bonderized and finished with baked enamel.

2. Cabinet interior shall be insulated with minimum one inch thick neoprene covered fiberglass.

3. Outdoor unit compartment shall be isolated and have an acoustic lining to assure quiet operation.

G. Compressor: Compressor shall be hermetic scroll type.

1. Compressor shall be furnished with access valves and it shall be installed on rubber isolators to reduce sound vibration.

2. Furnish with high and low-pressure protection.

3. Each heat pump shall be furnished with factory installed suction accumulator. Field installed accumulators are not permitted.

4. It shall be furnished with high and low-pressure protection, brass external vapor supply line service valves, vapor return line service valves with service gage connection port, service gage port connections on compressor suction and

discharge lines with Schrader-type fittings with brass caps, filter drier, pressure relief, liquid line solenoid valves, thermostatic expansion valves, and a holding charge of refrigerant.

H. Refrigeration Components: Refrigerant circuit components shall include brass external liquid line service valve with service gage port connections, suction line service valve with service gage connection port, service gage port connections on compressor suction and discharge lines with Schrader type fittings with brass caps, accumulator, bi-flow filter drier, pressure relief, reversing valve, heating mode metering device, and a holding charge of refrigerant.

I. Controls and Safeties:

1. Compressor motor assembly shall be protected with high and low-pressure switches, internal overloads, internal thermostat, internal relief valve, and anti-recycle relay, or time cycle device to prevent rapid cycling of compressor after any off cycle.

2. Control panel shall be pre-wired in unit casing.

3. The control circuit shall incorporate a safety circuit to render refrigerant system (compressor and outdoor air motor) inoperative should there be a loss of airflow or refrigerant.

4. Units shall also be furnished with automatic condenser-fan motor protection, high condensing temperature protection, compressor motor current and temperature overload protection, high pressure relief and condenser fan failure protection.

J. EMS Diagnostic Points:

1. Supply air temperature.

2. Return air temperature.

3. Space temperature.

4. Filter status.

5. Fan status.

6. Compressor status.

7. Other diagnostic point required by current Title 24, automated fault detection and diagnostics (FDD).

K. Low Ambient Operation: Head pressure control shall be provided for operation at outside air temperature below 45 degrees F.

L. Safeties:

1. High condensing temperature protection.

2. Compressor motor current and temperature overload protection.

3. High pressure relief.

4. Outdoor fan failure protection.

M. Filters:

1. Filters shall be 2-inch standard size high capacity replaceable media type, MERV 8, or equal, installed in an external 2-inch rack filter section and complete with an access door.

2. An-line filter-drier shall be furnished with equipment and installed at Project site.

N. Start-up: Factory test each unit before shipment to Project site. Performance test shall include full refrigeration start-up, fan and controls start-up. Each unit shall be provided with its own report with its own serial number. Non-tested units are not permitted to be delivered to Project site. Provide full start-up of units to include full refrigeration and provide a written report.

O. Parts Availability: Submit proof in writing that majority (minimum 80 percent) of replacements parts are commonly available and not proprietary. Also, submit proof in writing that a local parts sales and service facility exists, where replacement parts will be warehoused in quantity. Guarantee timely availability for parts that are proprietary.

2.03 INFRARED RADIANT HEATERS (RH-1)

Provide gas fired, forced draft, sealed combustion, radiant tube infra-red heaters with the following features:

A. Quality Assurance:

1.	Construction:	ANSI Z83.20 / CSA 2.34 "Gas-Fired Low-Intensity Infrared Heaters".
2.	Installation:	Z223.1 National Fuel Gas Code
3.	Gas Piping:	Z223.1 National Fuel Gas Code
4.	Electrical wiring:	NFPA 70 National Electrical Code

B. Burner Box: Natural Gas model, burner design with silicone gasketed doors and internally mounted blower, nickel plated steel burner cup, outside air adapter, hot surface ignition, four-try ignition, interlock safety switch, all components easily accessed, durable spot welded construction, mica flame observation window, balanced air rotor, controls are separated from the combustion air stream. Burner assembly shall be epoxy-polyester powder painted for corrosion resistance. Stainless steel flexible gas line and gas shut-off assembly included. Heater shall be equipped with permanently lubricated motor with thermal overload protection.

C. Burner Controls: All burners shall be factory wired for 120 Vac operation, Hot Surface Ignition (HSI), modulating gas valve and control for burner operation sequencing and modulation control. Provide the following as a minimum.

1. Fail-Safe Controls: To assure fail-safe operation, design shall include an air proving safety pressure switch to verify blower operation before gas valve opens. Blower air pressure shall be continuously monitored by a pressure sensor. A sensed reduction in pressure shall result in corresponding reduction in gas input for maximum safety and combustion quality.

2. Ignition Controls: All units shall be equipped with a control for ignition sequencing. Ignition shall be fully automatic HSI. The ignition sequence shall have a

prepurge and timed trial for ignition with multiple ignition trial before lockout occurs. The heater shall be capable of a minimum of 4 trials for ignition to provide maximum reliability. Heater shall have blower post-purge after burner shutdown. Heater shall have automatic one hour reset from lockout.

3. Modulation Controls: All units shall be equipped with a control board to modulate both gas input and combustion air simultaneously. Heater input shall modulate continuously (not staged) throughout input range from minimum rated input to maximum rated input. Control shall be configurable for modulating burner input by the following methods: automatically by 24V thermostat; or automatically by zone sensor inputs; or directly by remote analog signal; or manually by potentiometer.

4. Zone Control: All units shall be equipped with a control configurable to allow multiple heaters to be connected to a single heat demand control device. No user programming shall be required. Heat demand control device shall be connected to heater configured as a “central” unit. Remaining units in the zone shall be configured as “satellite” units and controlled by the “central” unit via low voltage control wiring.

D. Zone Temperature Sensor: Shall include 40-75ºF setpoint adjustability and low voltage ON/OFF switch as available from radiant heater manufacturer that is suitable for mounting on a standard 4 x 2 junction box. Temperature sensor shall be wired only to one heater per zone designated as the “central” heater. Modulation control signal shall be wired in series from “central” heater to each “satellite” heater in the zone via control wiring.

E. Radiant Tube - Heat Exchanger: Radiant Tube shall be 4 in. O.D. Heat Treated Aluminized steel tube x 16-gauge wall with an emissivity factor of 0.80 or greater. Hot rolled steel tubing shall not be used. Burner Tube shall be ALUMI-THERM® steel (aluminized steel/titanium alloy) tube for the first 10 ft. of each radiant heater. Heat exchanger must be supported in accordance with acceptable practices, local codes, seismic requirements, and applicable standards and as indicated on plans. Heat exchanger tube shall pitch down at least 1/2 inch in 20 ft. on radiant tube, away from burner box.

F. Manufacturers: Infrared heating system shall be VANTAGE II modulating radiant heaters as manufactured by Roberts-Gordon LLC, Buffalo, New York or equivalent by CoRayVac or Solaronics.

2.04 ROOF MOUNTED POWER EXHAUST VENTILATORS

A. RMEV-1

(Not Used)

B. RMEV-2:

(Not Used)

C. RMEV-3:

1. Manufacturer: Fan shall be model ACRUB as manufactured by Loren Cook Company, Greenheck CUBE Series, Carnes VUBK, or equal.

2. Spun aluminum, roof mounted, belt driven, upblast centrifugal exhaust ventilator, with components as indicated and specified. Sizes, performances, and accessories shall be as indicated on equipment

schedules on Drawings. Also, provide accessories for proper operation and balancing of fans in accordance with design intent and sequence of operation.

3. Certification: Fan shall be manufactured at an ISO 9001 certified facility. Fan shall be listed by Underwriters Laboratories Inc. (UL 705) and ETL listed for Canada. Fan shall bear AMCA Certified Ratings Seals for Fan Sound and Air Performance.

4. Housing: The fan shall be of bolted and welded construction utilizing corrosion resistant fasteners. The spun aluminum structural components shall be constructed of minimum 16 gage marine alloy aluminum, bolted to a rigid aluminum support structure. The aluminum base shall have a one piece inlet spinning and continuously welded curb cap corners for maximum leak protection. The windband shall have a rolled bead for added strength. A two piece top cap shall have stainless steel quick release latches to provide access into motor compartment without use of tools. An integral conduit chase shall be provided into motor compartment to facilitate wiring connections. The motor, bearings and drives shall be mounted on a minimum 14 gage steel power assembly, isolated from unit structure with rubber vibration isolators. These components shall be enclosed in a weather-tight compartment, separated from exhaust airstream. Lifting lugs shall be provided to help prevent damage from improper lifting. Unit shall bear an engraved aluminum nameplate and shall be shipped in ISTA Transit Tested Certified packaging.

5. Wheel: Wheel shall be centrifugal backward inclined, constructed of 100 percent aluminum, including a precision machined cast aluminum hub. Wheel inlet shall overlap an aerodynamic aluminum inlet cone to provide maximum performance and efficiency. Wheel shall be balanced in accordance with AMCA Standard 204, Balance Quality and Vibration Levels for Fans.

6. Motor: Motor shall be heavy-duty type with permanently lubricated sealed ball bearings and furnished at specified voltage, phase, and enclosure.

7. Bearing: Bearings shall be designed and individually tested specifically for use in air handling applications. Construction shall be heavy-duty regreasable ball type in a cast iron pillow block housing selected for a minimum L50 life in excess of 200,000 hours at maximum cataloged operating speed.

8. Belts and Drives: Belts shall be oil and heat resistant, non-static type. Drives shall be precision machined cast iron type, keyed and securely attached to wheel and motor shafts. Drives shall be sized for 150 percent of installed motor horsepower. The variable pitch motor drive must be factory set to specified fan RPM.

D. RMEV-4:

1. Manufacturer: Fan shall be model ACRUD as manufactured by Loren Cook Company, Greenheck CUE Series, Carnes VUDK, or equal.

2. Spun aluminum, roof mounted, direct driven, upblast centrifugal exhaust ventilator, with components as indicated and specified. Sizes,

performances, and accessories shall be as indicated on equipment schedules on Drawings. Also, provide accessories for proper operation and balancing of fans in accordance with design intent and sequence of operation.

3. Certification: Fan shall be manufactured at an ISO 9001 certified facility. Fan shall be listed by Underwriters Laboratories Inc. (UL 705) and ETL listed for Canada. Fan shall bear AMCA Certified Ratings Seals for Fan Sound and Air Performance.

4. Housing: Fan shall be of bolted and welded construction utilizing corrosion resistant fasteners. The spun aluminum structural components shall be constructed of minimum 16 gage marine alloy aluminum, bolted to a rigid aluminum support structure. The aluminum base shall have a one piece inlet spinning and continuously welded curb cap corners for maximum leak protection. The windband shall have a rolled bead for added strength. An integral conduit chase shall be provided into motor compartment to facilitate wiring connections. The motor shall be enclosed in a weather-tight compartment, separated from exhaust airstream. Unit shall bear an engraved aluminum nameplate and shall be shipped in ISTA Transit Tested Certified packaging.

5. Wheel: Wheel shall be centrifugal backward inclined, constructed of 100 percent aluminum, including a precision machined cast aluminum hub. An aerodynamic aluminum inlet cone shall be provided for maximum performance and efficiency. Wheel shall be balanced in accordance with AMCA Standard 204, Balance Quality and Vibration Levels for Fans.

6. Motor: Motor shall be heavy-duty type with permanently lubricated sealed bearings and furnished at specified voltage, phase, and enclosure.

2.05 CEILING CABINET FANS

A. CCF-1:

1. Manufacturer: Fan shall be GC 200-900 Series as manufactured by Loren Cook Company, Greenheck SP or CSP Series, Carnes VCDK or VCDD Series, or equal.

2. Provide ceiling, wall, or inline mounted, direct driven, centrifugal exhaust fans of sizes, capacities and configurations indicated on drawings, complete with accessories for installation of fans. Also, provide accessories for proper operation and balancing of fans in accordance with design intent and sequence of operation.

3. Certification: Fan shall be manufactured at an ISO 9001 certified facility. Fan shall be listed by Underwriters Laboratories (UL 705) and ETL listed for Canada. Fan shall bear AMCA Certified Ratings Seal for Sound and Air Performance.

4. Housing: The fan housing shall be minimum 20 gage galvanized steel and acoustically insulated. Blower and motor assembly shall be mounted to a minimum 14 gage reinforcing channel and shall be easily removable from housing. Motor shall be mounted on vibration isolators. Unit shall

be supplied with integral wiring box and disconnect receptacle shall be standard. Discharge position shall be convertible from right angle to straight through by moving interchangeable panels. The outlet duct collar shall include a reinforced aluminum damper with continuous aluminum hinge rod and brass bushings. To accommodate different ceiling thickness, an adjustable prepunched mounting bracket shall be provided. A powder painted white steel grille shall be provided as standard. Unit shall be shipped in ISTA Transit Tested Certified packaging.

5. Wheel: Wheel shall be centrifugal forward curved type, constructed of galvanized steel. Wheel shall be balanced in accordance with AMCA Standard 204, Balance Quality and Vibration Levels for Fans.

6. Motor: Motor shall be open drip proof type with permanently lubricated bearings, built-in thermal overload protection and disconnect plug. Motor shall be furnished at specified voltage.

2.06 GRAVITY EXHAUST VENTILATORS

A. GEIV-1:

1. Manufacturer: Unit shall be model PR or TR as manufactured by Loren Cook Company, Greenheck GRS Series, Twin City, or equal.

2. Spun aluminum, roof mounted gravity ventilators of sizes, capacities and configurations indicated on drawings, complete with accessories for installation of ventilators. Also, provide accessories for proper operation of ventilators per code and in accordance with design intent and sequence of operation.

3. Certification: Fan shall be manufactured at an ISO 9001 certified facility.

4. Housing: The unit shall be of bolted and welded construction utilizing corrosion resistant fasteners. The spun aluminum structural components shall be constructed of minimum 16 gage marine alloy aluminum, bolted to a rigid aluminum support structure. The aluminum base shall have continuously welded curb cap corners for maximum leak protection. The spun aluminum baffle shall have a rolled bead for added strength. Birdscreen constructed of 1/2" mesh shall be mounted across air opening. Unit shall bear an engraved aluminum nameplate and shall be shipped in ISTA Transit Tested Certified packaging.

5. Provide gravity type back-draft or relief dampers at relief or exhaust ventilators (with counterweights if required). Gravity relief dampers shall fully open at 0.01” static pressure.

6. Intake ventilators shall be provided with normally closed, motorized dampers that are interlocked with fan to open upon fan activation unless fan is provided with such a damper.

2.07 FILTERS

A. Air filters shall be of pleated, high capacity, disposable type of efficiencies indicated on drawings. Each filter shall consist of a non-woven cotton fabric media, media support grid, and enclosing frame. Filter shall be UL 900 listed, Class 2.

B. Filter media shall provide an average efficiency as specified on drawings per ASHRAE Standard 52.2.

C. Initial resistance of air filters shall not exceed following limits for each efficiency level at face velocities indicated. Lower resistance requirements, if indicated on drawings shall have precedence.

30 percent (MERV 8)	0.27 inch water gage at 500 feet per minute
75 percent (MERV 11)	0.28 inch water gage at 500 feet per minute
85 percent (MERV 13)	0.30 inch water gage at 500 feet per minute
95 percent (MERV 14)	0.38 inch water gage at 500 feet per minute

D. Media support shall be a welded wire grid or a rigid frame with an effective open area of not less than 96 percent.

1. Media support shall be bonded to filter media to eliminate possibility of media oscillation and media pull-away.

2. Media support grid shall be formed in such a manner that it effectively forms a radial pleat design, providing total use of filter media.

E. Enclosing frame shall be bonded to air entering and air exit side of each pleat, to ensure pleat stability. Inside periphery of enclosing frame shall be bonded to filter pack, thus eliminating possibility of air bypass.

F. Holding frames shall be factory fabricated of 16 gage galvanized steel, or equivalent and shall be furnished with gaskets and spring type positive sealing fasteners. Fasteners shall be capable of being attached or removed without use of tools.

G. Manufacturers: Camfil Farr, Koch, or AAF.

2.08 LOUVERS, AIR CONDITIONING (use in conjunction with relief damper)

A. Standard steel louvers shall be furnished complete with frames, blades, finish and construction details per Drawings and manufacturer’s recommendations.

B. Louvers shall be furnished with horizontal blades, 2 inches deep for air through wall installation in conjunction with gravity relief damper for backdraft protection that will open at 0.01 inch wc room static pressure as indicated on Drawings. Blades shall be 16-gage steel, spaced at 1 7/8-inch at 30 degrees angle, and with baked epoxy coating. Panel size shall be as indicated but not less than 24 inches width by 18 inches in height.

PART 3 – EXECUTION

3.01 GENERAL

A. Examine areas under which Work of this Section will be performed. Correct conditions detrimental to proper and timely completion of Work. Do not proceed until unsatisfactory conditions have been corrected.

3.02 EQUIPMENT FOUNDATIONS

A. Provide foundations (housekeeping pads, level platforms or curbs) for mechanical equipment whether indicated on drawings or not. Equipment foundations shall be of sufficient size and weight, and of proper design to preclude shifting of equipment under operating conditions, or under abnormal conditions imposed upon equipment.

B. Provide foundations (housekeeping pads, level platforms or curbs) for mechanical equipment whether indicated on drawings or not. Foundations shall meet requirements of equipment manufacturer and, when required by Architect, obtain from equipment manufacturer, approval of foundation design and construction, for equipment to be installed. Equipment vibration shall be maintained within design limits, and shall be dampened and isolated. Isolators shall be bolted to a structural member so as to be readily removable.

3.03 EQUIPMENT DESIGN AND INSTALLATION

A. Uniformity: Unless otherwise specified, equipment of same type or classification shall be product of same manufacturer.

B. Application: Only provide equipment as reviewed by Architect.

C. Equipment Installation: Equipment installation shall be in strict accordance with these Specifications, and installation instructions of manufacturers. Equipment installed on concrete foundations shall be grouted before piping is installed. Piping shall be installed in such a manner as not to place a strain on equipment. Flanged joints shall be adequately extended before installation. Piping shall be graded, anchored, guided and supported, without low pockets.

1. Install equipment in a neat and skillful manner, properly aligned, leveled, and adjusted for satisfactory operation.

2. Install so connecting and disconnecting of piping and accessories can be readily accomplished, parts are readily accessible for inspection, service and repair. Space shall be provided to readily remove filters, coils, compressors and fan wheels. Access doors shall be hinged with cam lock door handles.

3. Provide flexible connections for duct, pipe and conduit connections at moving equipment.

3.04 ROOF-TOP EQUIPMENT MOUNTING

A. Downflow Packaged Units: Install unit on a prefabricated mounting frame or curb secured directly to roof. Follow manufacturers recommended installation manuals. Submit Shop Drawings for review by Architect.

B. Horizontal Flow Packaged Units: Install unit on platform or prefabricated mounting frame or curb secured directly to roof designed to suit roof conditions and requirements of provided unit. Submit Shop Drawings for review by Architect.

3.05 NOISE AND VIBRATION

A. Operation of Equipment: Mechanical equipment and piping systems shall operate without exceeding specified noise and/or vibration levels.

B. Corrective Measures: If specified noise and/or vibration levels are exceeded, provide necessary changes to reduce noise and/or vibration levels to within specified levels.

3.06 FIELD TESTS AND INSPECTION

A. General: Perform field inspections, field tests, and trial operations as specified in Section 23 0500: Common Work Results for HVAC. Provide labor, equipment and incidentals required for testing. The Project Inspector will witness field tests and trial operations as specified in Section 23 0500: Common Work Results for HVAC.

B. Equipment and Material: Equipment and material certified as being successfully tested by manufacturer, in accordance with referenced Specifications and standards, will not require re-testing before installation. Equipment and materials not tested at place of manufacture will be tested before or after installation, as applicable or necessary, to determine compliance with reference Specifications and standards.

C. Start-Up and Operational Test: System shall be started up and initially operated with components operating. During this test, various strainers or filters shall be periodically cleaned until no further accumulation of foreign material occurs. Adjust safety and automatic control instruments as required to provide proper operation and control sequence. Refer to Section 23 0500: Common Work Results for HVAC.

D. Extent of Field Tests: After installation and before completion, Work of this Section shall be subjected to required field tests, including those specified here and in Section 23 0500: Common Work Results for HVAC.

E. Operation and Maintenance Data: Provide required operation and maintenance data as specified in Section 23 0500: Common Work Results for HVAC.

3.07 REFRIGERANT PIPING

A. Unless otherwise indicated, main liquid and suction lines from condensing unit to evaporator coil shall be of sizes specified by manufacturer.

B. Refrigeration piping shall be refrigeration grade copper tubing, type L hard-drawn. In instances where refrigeration lines are installed in an inaccessible location and must be snaked through conduit or a trench, that portion of tubing required to complete connections through conduit or trench may be soft drawn. Maintain entire system clean and dry during installation. Pipe shall be sealed until installed.

C. Refrigeration piping, both hard and soft-drawn, shall be straight and free from kinks, restrictions and horizontal runs shall be sloped towards compressor one inch to 10 feet wherever possible. Vapor line oil traps shall be installed on bottom of vertical risers and inverted oil trap shall be installed on top of vertical risers.

D. Joints shall be installed with Sil-Fos 15, Silvaloy 15, or equal, high melting point solder.

E. Flare nuts required on suction lines shall be of short forged or frost-proof type. Other fittings shall be standard sweat-soldered type. Ells and return bends shall be long radius type. Install leak lock material.

F. Refrigeration Piping: Joints shall be silver brazed and leak tested. Field fabricated lines shall be thoroughly flushed and cleaned before connection. Bleed nitrogen through lines during silver brazing, and cap and seal lines when not completed and connected to equipment.

G. Sleeve penetrations of floors, walls and ceiling to allow for free motion of piping. Provide 24 gage galvanized iron pipe and chrome-plated escutcheon plates. Pack annular space

between pipe and sleeve with incombustible material such as fiberglass and seal each end with mastic to provide a waterproof seal.

H. Install insulated couplings at points of connection between dissimilar metals for cathodic protection. Insulate copper tubing from ferrous materials and hangers with 2-inch thickness of 3-inch wide strip, 10 mil polyvinyl tape wrapped around pipe.

I. Support piping by iron hangers and supports. Hydra-Zorb cushion clamps, LSP Products Group Acousto Clamp, or equal, on non-insulated piping, and Klo-Shure coupling clamp on insulated piping, or equal.

J. Provide saddles to protect pipe insulation.

K. Provide connections of copper and brass pipe and tubing with Harris Products Group Safety-Silv 56, Lucas-Milhoupt, Inc., or equal, complying with ANSI/AWS A5.8 and NSF 51.

L. Insulate refrigerant suction lines.

M. On split heat pump systems, insulate both vapor and liquid lines. For insulation materials, refer to Section 23 0700: HVAC Insulation.

3.08 CLEANUP

A. Remove rubbish, debris and waste materials and legally dispose of off Project site.

3.09 PROTECTION

A. Protect Work of this Section until Substantial Completion.

END OF SECTION

DIVISION 26

ELECTRICAL

SECTION 26 0500

COMMON WORK RESULTS FOR ELECTRICAL

PART 1 - GENERAL

1.01 SUMMARY

A. This Section specifies the basic requirements for electrical installations and includes requirements common to more than one section of Division 26. It expands and supplements the requirements specified in sections of Division 01.

B. Related Requirements:

1. Division 01 - General Requirements.

2. Section 03 3000 - Cast-in-Place Concrete.

3. Section 09 9000 - Painting and Coating.

4. Division 23 - HVAC.

5. Division 27 – Communications.

6. Division 28 - Electronic Safety and Security.

C. Applicable Standards

1. ASTM D 709 (2007) – Laminated Thermosetting materials.

2. ANSI/NEMA FB-1 (2010) – Standard for Fittings, Cast Metal Boxes, and Conduit Bodies for Conduit, Electrical Metallic Tubing, and Cable.

3. ANSI/NEMA 250 (2008) – Enclosure for Electrical Equipment (1000 Volts Maximum).

4. California Electrical Code (CEC).

5. IEEE C57.12.28 (2005) – Standard for Pad-Mounted equipment (Enclosure Integrity).

6. UL 1 (2005) – Standard for Flexible Metal Conduit.

7. UL 1242 (2007) – Standard for Electrical Intermediate Metal Conduit.

8. UL 506 (2008) – Specialty Transformers.

9. UL 6 (2010) – Electrical Rigid Metal Conduit-Steel.

10. UL 797 (2007) – Electrical Metallic Tubing-Steel.

11. UL 870 (2008) – Standard for Wireways, Auxiliary Gutters, and Associated Fittings

1.02 BASIC ELECTRICAL REQUIREMENTS

A. Quality Assurance:

1. Workers possessing the skills and experience obtained in performing work of similar scope and complexity shall perform the Work of this Division.

2. Refer to other sections of the Specifications for other qualification requirements.

B. Drawings and Specifications Coordination:

1. For purposes of clearness and legibility, Drawings are essentially diagrammatic, and the size and location of equipment is indicated to scale whenever possible. Verify conditions, dimensions, indicated equipment sizes, and manufacturer's data and information as necessary to install the Work of this Division. Coordinate location and layout with other Work.

2. Verify final locations for rough-ins with field measurements and with the requirements of the equipment to be connected.

3. Drawings indicate required size and points of termination of conduits, number and size of conductors, and diagrammatic routing of conduit. Install conduits with minimum number of bends to conform to structure, avoid obstructions, preserve headroom, keep openings and passageways clear, and comply with applicable code requirements.

4. Routing of conduits may be changed provided that the length of any conduit run is not increased more than 10 percent of length indicated on the Drawings.

5. Outlet locations shall be coordinated with architectural elements prior to start of construction. Locations indicated on the Drawings may be distorted for clarity.

6. Coordinate electrical equipment and materials installation with building components and the Work of other trades

7. As much as practical, connect equipment for ease of disconnecting, with minimum of interference with other installations.

8. Coordinate connection of electrical systems with existing underground utilities and services.

C. Terminology:

1. Signal Systems: Applies to data, fire alarm, annunciator, sound, public address, buzzer, telephone, television, inter-communication, elevator access controls, lighting control systems and security systems.

2. Low Voltage: Applies to signal systems operating at 120 volts and less, and power systems operating at less than 600 volts.

3. UL: Underwriter's Laboratories Inc, Nationally Recognized Testing Laboratory (NRTL), or equal.

D. Regulations: Work shall comply with the requirements of authorities having jurisdiction and the California Electrical and Building Codes. Material shall conform to regulations of the National Board of Fire Underwriters for electrical wiring and apparatus. Materials shall be new and listed by UL, or another NRTL.

E. Structural Considerations for Conduit Routing:

1. Where conduits pass through or interfere with any structural member, or where notching, boring or cutting of the structure is necessary, or where special openings are required through walls, floors, footings, or other buildings elements, conform to CBC, Part 2, Title 24, Section 1906.3 for conduits and pipes embedded in concrete and Sections 2308.9.10 and 2308.9.11 for notches and bored holes in wood; for steel, as detailed on the structural steel Shop Drawings.

2. Where a concrete encasement for underground conduit abuts a foundation wall or underground structure which the conduits enter, encasement shall rest on a haunch integral with wall or structure, or shall extend down to footing projection, if any, or shall be doweled into structure unless otherwise indicated. Underground structures shall include maintenance holes; pull boxes, vaults, and buildings.

F. Electrically Operated Equipment and Appliances:

1. Furnished Equipment and Appliances:

a. Work shall include furnishing and installing wiring enclosures for, and the complete connection of electrically operated equipment and appliances and electrical control devices which are specified to be furnished and installed in this or other sections of the Specifications, wiring enclosures shall be concealed except where exposed Work is indicated on the Drawings.

b. Connections shall be provided as necessary to install equipment ready for use. Equipment shall be tested for proper operation and, if motorized, for proper rotation. If outlets are of incorrect electrical characteristics or any specified equipment fails to operate properly, repair and/or replace the outlet and/or equipment.

2. Equipment and Appliances Furnished by Others:

a. Equipment and appliances indicated on Drawings as "not in contract" (NIC), "furnished by others," or "furnished by the Owner," will be delivered to the Project site. Required electrical connections shall be performed for such equipment and appliances. Motorized equipment will be furnished factory-wired to a control panel or junction box unless otherwise indicated. Appliances will be furnished equipped with portable cord and cap. Provide disconnect switches where required.

b. Connections to equipment furnished under this Division shall be part of the Work of this section. Work shall include internal wiring, installation, connection and adjustment of bolted drive motors in which the motor is supplied as a separate unit, and connections only for equipment furnished with factory installed internal wiring, except as further limited by Drawings and this Specification. Work shall include furnishing and installing suitable outlets, disconnecting devices, starters, push-button stations, selector switches, conduit, junction boxes, and wiring necessary for a complete electrical installation. Work shall also include furnishing and installing conduit and boxes for HVAC control systems, furnished under Division 23. Devices and equipment furnished shall be of same type used elsewhere on the Work or as specified.

c. Electrical equipment furnished under other sections, for installation and connection under Work of this section, will be delivered to the Project site ready for installation.

d. Mechanical equipment furnished under other sections, and requiring electrical connection under this section, will be set in place as part of the Work of the section furnishing such equipment unless noted otherwise.

e. Suitability and condition of equipment furnished under other sections shall be determined in advance of installation. Immediate notice of damage, unsuitability, or lack of parts shall be given to the entity providing such equipment.

G. Protection of Materials:

1. Protect materials and equipment from damage and provide adequate and proper storage facilities during progress of the Work. Damaged materials and/or equipment shall be replaced.

H. Cleaning:

1. Exposed parts of Work shall be left in a neat, clean, usable condition. Finished painted surfaces shall be unblemished and metal surfaces shall be polished.

2. Thoroughly clean parts of apparatus and equipment. Exposed parts to be painted shall be thoroughly cleaned of cement, plaster, and other materials. Remove grease and oil spots with solvent. Such surfaces shall be wiped and corners and cracks scraped out. Exposed rough metal shall be smooth, free of sharp edges, carefully steel brushed to remove rust and other spots, and left in proper condition to receive finish painting.

3. Remove rubbish, debris, and waste materials and legally dispose of off the Project site.

I. WARRANTIES

1. Provide one year warranty on all material and labor performed, unless noted otherwise in specific sections.

PART 2 - PRODUCTS - NOT USED

PART 3 - EXECUTION

3.01 GENERAL REQUIREMENTS

A. Exposed conduits shall be painted to match the surfaces adjacent to installation.

B. Salvaged materials removed from buildings shall be removed from the Project site as required.

C. Where existing structural walls are cored for new conduit runs, separation between cored holes shall be three inches edge to edge from new or existing holes, unless otherwise required by the Architect. All coring to be laid out and reviewed by Architect prior to drilling. Contractor to verify location of structural steel, rebar, stress cabling or similar prior to lay out.

D. Electrical equipment shall be braced and anchored for CBC Seismic Design requirements, or as otherwise indicated on the Drawings.

3.02 DELIVERY STORAGE AND HANDLING

A. Deliver products to project site with proper identification, which shall include names, model numbers, types, grades, compliance labels, and similar information needed for District identification; all products and materials shall be adequately packaged and protected to prevent damage during shipment, storage, and handling.

B. Coordinate deliveries of electrical materials and equipment to minimize construction site congestion.

3.03 CUTTING AND PATCHING

A. Cutting and patching of electrical equipment, components, and materials shall include the removal and legal disposal of selected materials, components, and equipment.

B. Do not endanger or damage installed Work through procedures and processes of cutting and patching.

C. Repair or restore other work, or surfaces damaged as a result of the work performed under this contract.

3.04 CLEANUP

A. Remove rubbish, debris and waste materials and legally dispose off the Project site.

B. Remove equipment and implements of service, and leave entire work area neat and clean, to the satisfaction of the Owner Authorized Representative.

3.05 PROTECTION

A. Protect the Work of this section until Completion.

END OF SECTION

SECTION 26 0513

BASIC ELECTRICAL MATERIALS AND METHODS

PART 1 - GENERAL

1.01 SUMMARY

A. Section Includes:

1. Boxes, enclosures, keys and locks.

2. Receptacles and switches.

3. Identifications and signs.

B. Related Requirements:

1. Division 01 - General Requirements.

2. Division 26 – Electrical.

3. Division 27 – Communications.

4. Division 28 - Electronic Safety and Security.

PART 2 - PRODUCTS

2.01 BOXES, ENCLOSURES, KEYS AND LOCKS

A. Outlet Boxes and Fittings:

1. Outlet boxes installed in concealed Work shall be galvanized steel, pressed, or welded type, with knockouts.

2. In exposed Work, where conduit runs change direction or size, outlet boxes and conduit fittings shall be cast metal with threaded hubs cast integral with box or fitting.

3. Fittings shall be cast metal and non-corrosive. Ferrous metal fittings shall be cadmium-plated or zinc galvanized. Castings shall be true to pattern, smooth, straight, with even edges and corners, of uniform thickness of metal, and shall be free of cracks, gas holes, flaws, excessive shrinkage, and burnt-out sand.

4. Covers for fittings shall be galvanized steel or non-corrosive aluminum and shall be designed for particular fitting installed.

5. Light fixture outlets shall be 4-inch octagon, 4-inch square, 2 1/8-inch deep or larger, depending upon number of conductors or conduits therein. Plaster rings shall be furnished with round opening with two ears drilled 2 23/32 inches center to center.

6. For local device outlets provide 4-inch square 2 1/8-inch deep, boxes for single gang, 5-inch square boxes for two-gang, and special solid gang boxes with gang plaster ring for more than two switches.

7. For TV outlets, and horns and strobes provide manufacturer's supplied back box as needed. For television outlets, provide 4-gang deep boxes and 4-gang plaster rings.

8. Plaster rings shall be provided on flush-mounted outlet boxes except where otherwise indicated or specified. Plaster rings shall be same depth as finished surface. Install approved ring extension to obtain depth to finish surface.

9. In existing plywood wall or drywall construction, and where flexible steel conduit is fished into walls, single-gang and 2-gang outlets for wiring devices may be sectional steel boxes with plaster ears. Boxes shall be fastened to plywood with flat-head screws in each plaster ear screw hole. Boxes fastened to gypsum board shall be Raco, Appleton, Cooper, Bowers, or equal.

10. Factory made knockout seals shall be installed to seal box knockouts, which are not intact.

11. Where flexible conduit is extended from flush outlet boxes, provide and install weatherproof universal box extension adapters.

B. Junction and Pull boxes:

1. Junction and pull boxes, in addition to those indicated, shall only be used in compliance with codes, recognized standards, and Contract Documents.

2. Interior and non-weatherproof boxes shall be constructed of blue or galvanized steel with ample laps, spot welded, and shall be rigid under torsion and deflecting forces. Boxes shall be furnished with auxiliary angle iron framing where necessary to ensure rigidity.

3. Covers shall be fastened to box with a sufficient number of machine screws to ensure continuous contact all around. Flush type boxes shall be drilled and tapped for cover screws if boxes are not installed plumb.

Surfaces of pull and junction boxes and covers shall be labeled in black marker ink designating system, panelboard and circuit designation contained in box. In exposed Work, designation shall be installed on inside of pullbox or junction box cover.

4. Weatherproof NEMA 3R pull and junction boxes shall conform to foregoing for interior boxes with following modifications:

   a. Cover of flush mounting boxes shall be furnished with a weather-tight gasket cemented to, and trimmed even with, cover all around.

   b. Surface or semi-flush mounting pull and junction boxes shall be UL, or another Nationally Recognized Testing Laboratory (NRTL) listed as rain-tight and shall be furnished complete with threaded conduit hubs.

   c. Exposed portions of boxes shall be galvanized and finished with one prime coat and one coat of baked-on gray enamel, unless already furnished with factory baked-on finish.

5. Junction and pull boxes shall be rigidly fastened to structure and shall not depend on conduits for support.

C. Floor Outlets:

1. Provide floor outlets, as specified on plans. Floor boxes with flush brass floor plates shall be set to finish flush with finish floor covering, whether it be carpeted, wood, resilient floor covering, or other finish materials.

D. Keys and Locks:

1. Provide two keys with furnished door locks, including cabinet door locks and switchboard locks, two keys for lock switches on switchboards or control panels, and two keys with interlocks or other furnished lock switches. Deliver keys to Owner.

2.02 RECEPTACLES AND SWITCHES

A. Receptacles:

1. Duplex receptacles shall be heavy-duty specification grade, grounding type. Terminal screws shall be back and side wired with internal screw pressure plates. Mounting strap shall feature heavy-duty brass

construction. Receptacle back body shall be PVC. Receptacle face shall be White, impact resistant nylon. Receptacles shall have triple wipe brass power contacts.

2. Duplex receptacles on circuits supplied by Emergency Generator shall have red color bodies and red color cover plates.

3. Single receptacles shall be heavy-duty specification grade, grounding type. Terminal screws shall be back and side wire with internal screw pressure plates. Mounting strap shall feature heavy-duty brass construction. Receptacle back body shall be thermoplastic. Receptacle face shall be white, impact resistant nylon. Receptacles shall have triple wipe brass power contacts. For circuits consisting of one single receptacle only, ampere rating of receptacle shall be same as circuit breaker or fuse.

4. 15 and 20 amps single receptacles on circuits supplied by panel boards with integral surge suppression shall be Pass & Seymour NEMA 5-20R model number 5361-BL (blue), and NEMA 5-15R model number 5261-BL (blue) respectively. Equal receptacles by other Owner approved manufactures are acceptable.

5. Provide specification grade ground-fault circuit interrupter (GFCI) type receptacles in accordance with 2010 UL standards. GFCI receptacles shall have a trip indication light. Receptacle terminal screws shall be back and side wire with internal screw pressure plates. Test and reset buttons shall match device body and shall be ivory. GFCI receptacles shall be white color, manufactured in standard configuration. Exterior mounted receptacles shall be mounted inside weatherproof enclosure.

6. Provide weatherproof receptacles, except where otherwise indicated or specified, consisting of GFCI receptacles, as specified herein, and metal plates with die-cast lockable hinged lids and weatherproof mats;

7. Provide transient voltage surge suppression (TVSS) receptacles offering metal oxide varistors (MOVs) protecting normal and common modes, (L-N, L-G, N-G) with 500V suppressed voltage. TVSS devices shall offer 3-mode equal protection with 210 joules minimum per mode of energy absorption and 13,000 amp maximum surge capability. TVSS devices shall have 3 thermal fuses and two over-current protection fuses. TVSS devices shall have LED visual only surge status indicator to alert user to surge suppression circuit condition. Visual indicator will be illuminated (red) when power is on and surge suppression circuit is fully functional. Visual indicator will not be illuminated when power is off

or unit experiences loss of surge suppression protection. Terminals shall be back and side wire including ground terminal. Color shall be blue.

NEMA #	Pass& Seymour	Hubbell	Leviton
(20 amps) NEMA 5-20R	5352BLSP	HBL5360SA	5380B
(15 amps) NEMA 5-15R	5252BLSP	HBL5260SA	5280B

8. Receptacles within 6 feet of water fountains, counter tops, or any sources of water shall be GFCI type.

B. Switches:

1. Local Switches:

a. Provide local switches, high strength thermoplastic toggle, specification industrial grade, rated 20 amps at 120-277 volts AC only, with plaster ears, external screw pressure plate back and side wired, and standard size composition cups which fully enclose mechanism. Switches shall be approved for installation at currents up to full rating on resistive, inductive, tungsten filament lamp and fluorescent lamp loads, and for up to 80 percent of rating for motor loads. Switches shall have oversized silver alloy contacts for long life and better heat dissipation. Provide switches as single pole, double pole, 3-way, 4-way, non-lock type. Provide non-lock type switches with white handles. Switches on circuits supplied by Emergency Generator shall have red color handle and red color cover plates.

b. Provide lock type switches, specification industrial grade, 20 amp, 120-277 volts with metal or nylon key guides with on/off indication, and operable by same key. Key shall be standardized vertically oriented, tamper resistant, forked key with two each 5/16-inch long forks, 5/32-inch spacing between forks and 5/16-inch width overall.

c. Pilot light switches shall be rated 20 amps and shall conform to specifications for local switches. Switches shall be furnished with red, Lexan handles that are lighted by long-lasting neon lamps. Pilot light shall light when load is on. Pilot light 120 volt switches

d. Provide where required, remote control switches for mechanically held contactors arranged for 3-wire control, toggle type, momentary contact, single pole, 3-position with center off position, rated 20 amps at 120-277 volts AC only, with plaster ears, binding

screws for side wiring, standard size composition cups which fully enclose mechanism.

e. Provide where required, remote control switches for magnetically held contactors arranged for 3-wire control, toggle type, maintained contact, single pole, 3-position with center off position, rated 20 amps at 120-277 volts AC only, with plaster ears, binding screws for side wiring, standard size composition cups which fully enclosed mechanism.

f. Momentary Contact locking key type switch. 20A 120/277V center off. Key shall be District standardized vertically oriented, tamper resistant, forked key with two each 5/16" long forks, 5/32" spacing between forks and 5/16" width overall.

g. Momentary Contact switch low voltage 1 pole 3A 24VAC 3 position center off. Key for locking switch shall be District standardized vertically oriented, tamper resistant, forked key with two each 5/16" long forks, 5/31" spacing between forks and 5/16" width overall.

2. Time Switches and Photoelectric Controls for existing construction.

a. Provide time switches with a 7-day, solid-state, electronic type capable of fully automatic or manual operation and housed in a sheet steel enclosure unless built into a panel or switchboard. Contacts rated for 25 amps resistive or inductive, each pole 240 VAC; 5 amps tungsten or 277 VAC pilot duty, each pole 240 VAC. Time switches to contain a non-volatile clock and non-volatile memory with a built-in rechargeable super capacitor power carry-over system. Battery carryover is not acceptable. Provide a minimum of 15 on/off set points per week. Timing to be in one minute increments with a minimum on or off time of one minute. Time switch digital displays to indicate days of week, hours, and minutes. Display to contain a load status light to indicate when equipment is in operation. Time switches; Paragon Model EC7000 Series, Tork Model EW 101B series, Intermatic ET7000 series, or equal. Features required for application:.

1) Liquid crystal display panel.

2) Holiday scheduling: Up to 40 dates may be assigned special holiday schedules, up to one year in advance.

3) Automatically adjusts to and from daylight savings time and for leap year.

4) Contact ratings: 10 amp at 240 VAC.

5) Safety override switch for each circuit to either provide shut down of circuit or to override on.

6) Selective review: All or part of schedule shall be displayed at touch of a key.

7) Super Capacitor for power carry over system.

8) Supply voltage: 120 V.

9) 365-day advance scheduling.

b. Photoelectric control: Shall be rated 2,000 watts, 120V with single pole, single throw, normally closed contact, enclosed in a die-cast aluminum gasketed enclosure with 1/2 inch conduit fitting, Tork series 2100, or equal.

3.

2.03 IDENTIFICATION AND SIGNS

A. Identification Plates:

1. Provide identification plates for the following unless otherwise specified, for switchboards, unit substations, motor control centers, control panels, push-button stations, time switches, contactors, motor starters, motor switches, panelboards, and terminal cabinets.

2. Identification plates shall be of plastic stock and shall adequately describe function, voltage and phase of identified equipment. Where identification plates are detailed or described on Drawings, inscription and size of letters shall be as indicated. For lighting and power panels, identification plates shall indicate panel designation, voltage, and phase of panel. For terminal cabinets, identification plates shall indicate system contained in terminal cabinet.

3. Identification plates shall be black-and-white nameplate stock of bakelite with characters cut through black exposing white. Identification plates for Emergency Circuits and equipment shall be red-and-white nameplates.

4, Plates shall be furnished with beveled edges and shall be securely fastened in place with No. 4 Phillips-head, cadmium-plated steel, self-tapping screws. Characters shall be 3/16 inch high, unless otherwise indicated.

B. Markings:

1. Install identification markings to surface-mounted starters, switches, disconnect switches, contactors, and other devices controlling motors and appliances. Provide abbreviations required along with an identifying number. Markings to be provided with locking type stencils using paint of a contrasting color. Figures shall be 3/8 inch high unless otherwise indicated. Dymo Industries Inc., self-sticking plastic labels, with embossed characters made with a typewriter may be installed instead of stencils and paint; p-touch self adhesive plastic, or Brother P-Touch self sticking laminated plastic labels may be installed.

PART 3 - EXECUTION

3.01 INSTALLATION AND SUPPORT OF BOXES

A. Install outlet boxes flush with finished surface of wall or ceiling. Install plumb and securely fastened to structure, independent of conduit. Except where otherwise indicated, provide factory-fabricated adjustable attachment bar hangers between studs to support outlet boxes. When installation is performed in fire rated walls, maintain the wall's rating integrity by means of approved fire stop methods.

B. Outlet boxes installed in suspended or furred ceilings with steel runner or furring channels shall be supported, except where otherwise indicated, by a Unistrut P-4000 Tessco A1200HS-10, Cooper B-Line B22s-HG, or equal channel spanning main ceiling runner channels. Each box shall be supported from its channel by a 3/8 inch 16 threaded steel rod with a Unistrut P-4008, Fastenal #48604, Copper B-Line 78101140346 or equal nut and a Tomic No. 711-B Adapta-Stud, or equal. Rod shall be tightened to a jamb fit with channel and its nut. Box shall be locked to rod by means of a 1/2 inch locknut on stud and a 3/8 inch 16 hex nut locking stud to rod.

C. Heights of outlets and equipment indicated on Drawings shall govern. In absence of such indications, following heights shall be maintained with heights measured to centerline unless otherwise noted:

1. Install wall-mounted telephones, light switches, and other switches, 48 inches above finished floor. Refer to other Division 26, 27 and 28 Sections.

2. Install panelboards and terminal cabinets 6 feet 6 inches from finish floor to top of cabinet.

3. Install television outlets at a height corresponding to location of television monitor, or a minimum of 15 inches above finished floor.

4. The use of extension boxes shall be limited to not more than 1 times the original depth of junction box.

3.02 COVER PLATES

A. Provide a plate on each switch, plug, pilot light, data, interphone, public telephone, and television outlet, and on existing and reset outlets where so indicated or required. Plates shall be of stainless steel unless otherwise specified.

B. Flush wiring device and signal system outlets indicated to be blank covered, shall be covered with blank stainless steel plates. Flush lighting outlets to be blanked shall be covered with Wiremold 5736 steel covers, or equal, painted to match surrounding finish. Provide stainless steel covers to blank indicated or required surface-mounted outlets.

C. In the following cases, and at required locations. Switch and receptacle plates shall be engraved with the device(s), or fixtures being controlled, or as indicated:.

1. Three-gang and larger gang switches in locations other than classrooms.

2. Lock switches.

3. Pilot switches.

4. Switches so located that operator cannot see fixtures, or items of equipment controlled while his hand is on the switch.

5. Switches not in same room with fixtures or items of unit heaters, air curtains, fly fans, etcetera.

6. Receptacles operating at other than 120 V shall be identified with the operating voltage.

7. Switches operating on 277 V shall be identified with the operating voltage.

8. Where indicated on Drawings.

D. Designations shall be as indicated on Drawings or as specified by Architect.

E. Standard GFI cover plates shall be Pass & Seymour 4600, Raco 5028-0, or equal. GFI cover plates shall be provided with a CAM lock mechanism with two keys or a padlock hasp that does not protrude through the face of the cover and will allow the shank of locks keyed Corbin No. 60 keys.

3.03 IDENTIFICATION OF CIRCUITS AND EQUIPMENT

A. Provide descriptive nameplates or tags permanently attached to switchboards, motor control centers, transformers, panelboards, circuit breakers, disconnect switches, starters, pushbutton control stations and other apparatus installed for operation or control of circuits, appliances, fire alarm control panel(s), fire alarm annunciator(s), power supplies, terminal cabinets, energy management control units, and Information technology system backbone and distribution equipment points.

B. Provide nameplates of engraved laminated plastic, or etched metal. Submit Shop Drawings denoting dimensions and format to Architect before installation. Fasten to equipment with escutcheon pins, rivets, self-tapping screws, or machine screws. Self-adhering or adhesive backed nameplates are not permitted.

C. Fasten tags to feeder wiring in conduits at every point where runs are broken or terminated, including pull wires in empty conduits. Indicate circuit, phase, and function. Tag branch circuits in panel boards and motor control centers. Tags may be manufactured of pressure-sensitive plastic or embossed self-attached stainless steel or brass ribbon.

D. Provide circuit identification cards and cardholders in all panel boards. Cardholders shall consist of metal frame retaining a clear plastic cover permanently attached to inside of panel door. List of circuits shall be typewritten on a card. Circuit description shall include name or number of circuit, area and connected load.

E. Junction and pull boxes shall have covers stenciled with box number when indicated on Drawings, or circuit numbers according to panel schedules. Data shall be lettered in a conspicuous manner with a color contrasting with finish.

F. Name shall be correctly engraved, with a legend indicating function or areas, when required by codes or indicated on Drawings.

3.04 PROTECTION

A. Protect Work of this section until Completion.

3.05 CLEANUP

A. Remove rubbish, debris, and waste materials and legally dispose of off Project site.

END OF SECTION

SECTION 26 0519

LOW-VOLTAGE CONDUCTORS (600 VOLT AC)

PART 1 - GENERAL

1.01 SUMMARY

A. Provisions of Division 01 apply to this section.

B. Section Includes: Low-voltage wire, splices, terminations and installation.

1.02 SUBMITTALS

A. Provide in accordance with Division 01.

PART 2 - PRODUCTS

2.01 WIRES

A. Wires shall be single conductor type THHN or THWN insulated with polyvinyl chloride and covered with a protective sheath of nylon, rated at 600 volts. Wires may be operated at 90 degrees C. maximum continuous conductor temperature in dry locations, and 75 degrees C. in wet locations and shall be listed by UL Standard 83 for thermoplastic insulated wires, listed by Underwriter's Laboratories (UL) for installation in accordance with Article 310 of the California Electrical Code (CEC). Conductors shall be solid copper for 12 AWG and smaller conductors, and stranded copper for 10 AWG and larger conductors. Conductors shall be insulated with PVC and sheathed with nylon. Wires shall be identified by surface markings indicating manufacturer's identification, conductor size and metal, voltage rating, UL symbol, type designations and optional rating. Indentations for lettering are not permitted. Wires shall be tested in accordance with the requirements of UL standard for types THWN, or THHN.

B. Conductors shall be solid Class B or stranded Class C, annealed uncoated copper in accordance with UL standards, or another Nationally Recognized Testing Laboratory (NRTL).

2.02 STANDARDS

A. THWN/THHN wires shall comply with the following standards:

1. UL 83 for thermoplastic insulated wires.

2. UL 1063 for machine tool wires and cables.

PART 3 - EXECUTION

3.01 INSTALLATION

A. Wires shall not be installed until debris and moisture is removed from conduits, boxes, and cabinets. Wires stored at site shall be protected from physical damage until they are installed and walls are completed.

B. Wire-pulling compounds furnished as lubricants for installation of conductors in raceways shall be compounds approved and listed by UL, NRTL, or equal. Oil, grease, graphite, or similar substances are not permitted. Pulling of 2 AWG or larger conductors shall be performed with a cable pull machine. Any runs shorter than 50 feet are exempt. When pulling conductors, do not exceed manufacturer's recommended values

C. The Project Inspector will observe installation of feeder cables. Notify the Project Inspector not less than two working days in advance of the proposed time of feeder installation.

D. At outlets for light, power, and signal equipment, pigtail splices with 8-inch circuit conductor leads for connection to fixtures, equipment, and devices.

E. Pressure cable connectors, pre-insulated 3M Scotchlok, Hubbell Power, O-Z/Gedney or equal, Y, R or B spring-loaded twist-on type, may be furnished in splicing number 8 AWG or smaller wires for wiring systems; except public address and telephone systems.

F. Joints, splices, taps, and connections to switchboard neutral, bonding or grounding conductors, conductors to ground busses, and transformer connections for wires 6 gage and larger shall be performed with high-pressure cable connectors approved for installation with copper conductors. Connectors shall be insulated with heavy wall heat shrink WCSM, or cold-applied roll-on sleeve RVS. Insulation level shall be a minimum of 600V and joints, splices, and taps shall be qualified to ANSI C 119.1, UL, NRTL, or equal listed mechanical pressure connections.

G. Connections to any bussing and high-press cable connectors shall be securely bolted together with corrosion-resistant plated carbon steel, minimum grade five machine screws secured with constant pressure-type locking devices.

H. Connection of any bonding or grounding conductors shall be securely bolted together with corrosion-resistant plated carbon steel, minimum grade five machine screws secured with constant pressure-type locking devices.

I. Wire switchboards, panel cabinets, pull boxes, and other cabinets except public address, shall be neatly grouped and tied in bundles with nylon ties at 10-inch intervals. In switchboards, panels and terminal blocks, wires shall be fanned out to terminals. If bundles are longer than 24 inches, a maximum of nine current carrying conductors may be bundled together.

J. Install conductor lengths with a minimum length within the wiring space. Conductors must be long enough to reach the terminal location in a manner that avoids strain on the connecting lug.

K. Maintain the conductor required bending radius.

L. Neutral conductors larger than 6 gage, which are not color identified throughout their entire length, shall be taped, painted white or natural gray, or taped white where they appear in switchboards, cabinet, gutters or pull boxes. Neutral conductors 6 gage and smaller shall be white color identified throughout their entire length.

M. Wiring systems shall be free from short circuits and grounds, other than required grounds. The contractor shall be responsible for the testing of feeder and branch circuit conductor's insulation resistance. The insulation of the conductors shall be tested prior to connections to any panelboards, switchboards, variable frequency drives, lighting control systems, ballasts, and wiring devices such as but not limited to GFI receptacles, TVSS receptacles, or equipment. Insulation testing of panelboards and switchboards shall be independently performed from the insulation testing of any conductors as specified in other sections of this specification.

1. Utilize the services of an approved independent testing laboratory to perform megger time-resistance insulation testing of feeder conductors. Tests must be conducted with wires disconnected at both ends.

    a. Provide calibration program records to assure the testing instrument to be within rated accuracy. The test equipment

accuracy shall be in accord with the requirements stated by the National Institute of Standards and Technology (NIST).

b. Test equipment shall be provided with a label stating the date of last calibration. As a minimum the equipment shall have been calibrated within the past 12 months.

c. Test reports shall include the following:

1) Identification of the testing organization.

2) Equipment identification.

3) Ambient conditions.

4) Identification of the testing technician.

5) Summary of project.

6) Description of equipment being tested.

7) Description of tests.

8) Test results.

9) Analysis, interpretation and recommendations.

2. Utilize the services of an approved independent testing laboratory or a qualified contractor's employee (Technician certified in accordance with ANSI/NETA ETT-2000 Standard for Certification of Electrical Testing Personnel) to perform megger time-resistance insulation testing of branch circuit conductors. Tests must be conducted with wires disconnected at both ends.

a. Test equipment and report requirements stipulated under paragraph 3.01.N.1 apply to branch circuit testing.

3. Tests shall be performed in the presence of the Project Inspector.

4. Insulation resistance shall not be less than 100 mega-ohms.

3.02 COLOR CODES

A. General Wiring:

1. Color code conductor insulation as follows:

SYSTEM VOLTAGE		
Conductor	240/120 Delta	480Y/277
Phase A	Black	Brown
Phase B	Red	Orange
Phase C	Blue	Yellow
Neutral	White	Natural Gray

Neutrals shall be colored-distinguished if circuits of two voltage systems are used in the same raceway.

2. For phase and neutral conductors 6 gage or larger, permanent plastic-colored tape may be furnished to mark conductor end instead of coded insulation. Tape shall cover not less than 2 inches of conductor insulation within enclosure.

3.03 FEEDER IDENTIFICATION

A. Feeder wires and cables shall be identified at each point the conduit run is broken by a cabinet, box, gutter, etc. Where terminal ends are available, identification shall be by means of heat shrink wire markers, which provide terminal strain relief. Markers shall be by Tyco Electronics, Panduit, Brady Perma-Sleeve, or equal. Identification in other areas shall be by means of wrap-around tape markers from Tyco Electronics, Panduit, Brady Perma-Code or equal. Markers shall include feeder designation, size, and description.

3.04 TAPE AND SPLICE KITS

A. Splices, joints, and connectors joining conductors in dry and wet locations shall be covered with insulation equivalent to that provided on conductors. Free ends of conductors connected to energized sources shall be taped. Voids in irregular connectors shall be filled with insulating compound before taping. Thermoplastic insulating tape approved by UL, NRTL, or equal for installation as sole insulation of splices shall be furnished and shall be installed according to manufacturer's printed specifications.

3.05 PROTECTION

A. Protect the Work of this section until Completion.

3.06 CLEANUP

A. Remove rubbish, debris and waste materials and legally dispose of off the Project site.

END OF SECTION

SECTION 26 0526

GROUNDING AND BONDING

PART 1 - GENERAL

1.01 SUMMARY

A. Section Includes: Provide and install grounding system as indicated or required.

B. Related Requirements:

1. Refer to related sections for their system grounding requirements.

2. Refer to Aquatic design drawings and specifications for the Pool grounding and bonding.

3. Section 26 0500: Common Work Results for Electrical.

4. Division 27: Communications.

1.02 QUALITY ASSURANCE

A. Reference Standards:

1. IEEE 142 Green Book.

2. Underwriter's Laboratories (UL).

3. California Electrical Code.

4. Building Industry Consultant Services International (BICSI) (Signal).

5. EIA/TIA (Signal and power).

6. Nationally Recognized Testing Laboratory (NRTL) or equal.

1.03 SYSTEM DESCRIPTION

A. Metallic objects on the Project site that enclose electrical conductors, or that are likely to be energized by electrical currents, shall be effectively grounded.

B. Metal equipment parts, such as enclosures, raceways, and equipment grounding conductors, and earth grounding electrodes shall be solidly joined together into a continuous electrically conductive system.

C. Metallic systems shall be effectively bonded to the main grounding electrode system.

D. A separately derived AC source shall be grounded to the equipment grounding conductor, and to separate “made” electrode of building grounding electrode system.

E. Electrical continuity to ground metal raceways and enclosures, isolated from equipment ground by installation of non-metallic conduit or fittings, shall be provided by a green insulated grounding conductor of required size within each raceway connected to isolated metallic raceways, or enclosures at each end. Each flexible conduit over six feet in length shall be provided with a green insulated grounding conductor of required size.

F. Cold water, or other utility piping systems, shall not be utilized as grounding electrodes due to the installation of insulating couplings and non-metallic pipe in such installations. In addition to bonding to cold water pipe provide at least one of the following made grounding electrodes:

1. A dedicated “made” electrode, fabricated of at least 20 feet of galvanized 1/2 inch diameter rebar encased by at least two inches of concrete, and placed next to the bottom of a concrete foundation, or footing in direct contact with earth A welded extended portion shall surface at the location of the common grounding electrode bus bar and be extended by a 3/0 CAD welded bare copper cable, or be CAD welded directly to the bus. The CAD weld shall be at least four inches above finished floor in a dry location. The main grounding electrode and associated grounding conductors shall be in an enclosure and in conduit.

2. Grounding electrodes as specified hereafter in this section.

3. Concrete enclosed electrode, fabricated of at least 20 feet of No. 2 AWG, minimum size, bare copper conductor, encased by at least two inches of concrete, located within or near bottom of a concrete foundation, or footing, which is in direct contact with earth. Footing rebar shall be connected to copper wire with approved connectors. An external electrode, as specified hereafter or as required by the CEC, shall be installed and connected to foundation or footing rebar.

G. Non-current carrying metal parts of high-voltage equipment enclosures, signal and power conduits, switchboard and panelboard enclosures, motor frames, equipment cabinets, and metal frames of buildings shall be permanently and effectively grounded. Provide a CEC sized grounding conductor in every raceway.

H. Within every building, the main switchboard or panelboard, shall be bonded to the cold water line. Metallic piping systems such as gas, fire sprinkler, or other systems shall be bonded to the cold water line.

1.04 SUBMITTALS

A. Provide in accordance with Division 01.

PART 2 - PRODUCTS

2.01 MATERIALS

A. Furnished yard boxes shall be precast concrete and shall be approximately 14 inches wide by 19 inches long by 12 inches deep or larger, if necessary to obtain required clearances. Boxes shall be furnished with bolt-down, checkered, cast iron covers and cast iron frames cast into boxes. Yard boxes shall be Jensen Precast, Oldcastle Precast, Western Precast, Kistner , or equal.

B. “Made” electrodes shall be copper-clad steel ground rods, minimum 3/4 inch diameter by ten feet long.

PART 3 - EXECUTION

3.01 INSTALLATION

A. Grounding electrodes shall be installed in the nearest suitable planting area, where not otherwise indicated on Drawings, and each electrode shall terminate within a concrete yard box installed flush with finish grade. In planting areas, finish elevation of concrete yard boxes shall be two inches above planting surfaces.

B. If concrete enclosed electrode is provided, grounding wire shall be terminated to a suitable copper plate with grounding lugs and must be enclosed in a raceway or box..

C. Grounding rods shall be driven to a depth of not less than eight feet. Permanent ground enhancement material, (GEM) as manufactured by Erico Electrical Products, Loresco Powerset, Tessco Ultrafil or equal, shall be installed at each ground rod to improve grounding effectiveness. Install in accordance with manufacture's installation instructions.

D. Grounding electrodes shall provide a resistance to ground of not more than 25 ohms.

E. When installing grounding rods, if resistance to ground exceeds 25 ohms, two or more rods connected in parallel, or coupled together shall be provided to meet grounding resistance requirements.

F. Ground rods shall be separated from one another by not less than ten feet.

G. Parallel grounding rods shall be connected together with recognized fittings and grounding conductors in galvanized rigid steel conduit, buried not less than 12 inches below finish grade.

3.02 TESTING

A. Provide the services of an approved independent testing laboratory to test grounding resistance of “made” electrodes, ground rods, bonding of building steel, water pipes, gas pipes and other utility piping. Tests shall be performed as follows:

1. Visually and mechanically examine ground system connections for completeness and adequacy.

2. Perform fall of potential tests on each ground rod or ground electrode where suitable locations are available per IEEE Standard No. 81, Section 8.2.1.2. Where suitable locations are not available, measurements will be referenced to a known dead earth or reference ground.

3. Perform the two point method test per IEEE No. 81, Section 8.2.1.1 to determine ground resistance between ground rod and building steel, and utility piping - such as water, gas and panelboard grounds. Metal railings at building entrances and at handicapped ramps shall also be tested.

4. Test shall be performed in the presence of the Inspector.

B. Submit 3 copies of test results to the Architect. Test results shall be submitted on an official form from the independent testing laboratory recording Project location, test engineer, test conditions, test equipment data, ground system layout or diagram, and final test results.

3.03 PROTECTION

A. Protect the Work of this section until Completion.

3.04 CLEANUP

A. Remove rubbish, debris, and waste materials and legally dispose of off the Project site.

END OF SECTION

SECTION 26 0533

RACEWAYS, BOXES, FITTINGS, AND SUPPORTS

PART 1 - GENERAL

1.01 SUMMARY

A. Section Includes:

1. Raceways and wire ways.
2. Conduit installation.
3. Underground requirements.

B. Related Requirements:

1. Section 26 0500: Common Work Results for Electrical.
2. Section 26 0513: Basic Electrical Materials and Methods.
3. Division27: Communications.
4. Division 28 - Electronic Safety and Security.

C. Applicable Standards and Codes.

1. EIA/TIA 569 Standards.
2. National American Standards Institute (ANSI).
3. National Electrical Manufacturer’s Association (NEMA).
4. Nationally Recognized Testing Laboratory (NRTL).
5. California Electrical Code (CEC).
6. Uniform Building Code (UBC).
7. Underwriters Laboratory (UL).

1.02 SUBMITTALS

A. Materials List: Provide in accordance with Division 01.

PART 2 - PRODUCTS

2.01 RACEWAYS

A. Conduit Materials:

1. Metallic conduit, and tubing shall be manufactured under the supervision of an UL, or another NRTL factory inspection and label service program. Each ten-foot length of conduit and tubing shall bear the UL or another NRTL label and manufacturer's name.

2. Rigid metallic conduit shall be rigid steel, heavy wall, mild steel, zinc-coated, with an inside and outside protective coating manufactured in accordance with ANSI C 80.1. Couplings, elbows, bends, conduits, bushings and other fittings shall be the same materials and finish as the rigid metallic conduit. Fittings, connectors, and couplings shall be threaded type, manufactured in accordance with ANSI C 80.1 and UL 6.

3. Electrical metallic tubing shall be steel tubing, zinc-coated with a protective enamel coating inside, manufactured in accordance with NEMA C 80.3. Fittings, couplings, and connectors shall be gland compression type, set screw couplings and connectors not permitted. All parts shall be manufactured in accordance with NEMA C80.3 and UL 6A Electrical metallic tubing is designated hereinafter as EMT. Steel and rain tight fittings shall be approved and listed for the intended application.

4. Flexible steel conduit shall be of flexible interlocking strip construction with continuous zinc coating on strips, manufactured in accordance with UL 1.

    a. Connectors and couplings shall be required fittings of the type, which threads into convolutions of flexible conduit.

5. Liquid-tight flexible metal conduit shall be galvanized heavy wall, flexible locked steel strip construction, UV rated, with smooth moisture and oil-proof, abrasion-resistant, extruded plastic jacket. Connectors shall be as required for installation with liquid-tight flexible conduit and shall be installed to provide a liquid-tight connection.

6. Non-metallic conduit shall be rigid PVC electrical conduit extruded to schedule 40 dimensions of Type II. Grade 1 high impact, polyvinyl chloride, sweeps, couplings, reducers and terminating fittings shall be listed under the UL, or another NRTL, and shall bear the manufacturer's listed marking.

7. Metal Clad (MC) cable system is not allowed.

B. Sleeves for Conduits: Sleeves shall be adjustable type by Carlon, U.S. Plastic, PEP Plastic or equal.

C. Where conduit enters a building through a concrete foundation below grade, or ground water level, or where it is necessary to seal around a conduit where it passes through a concrete floor or wall, provide O-Z/Gedney Type FSK Thru Wall and Floor Seal, equivalent Cooper Crouse Hinds Thru-Wall, Legrand Thru-Wall, or equal.

D. Conduit Seal Fittings:

1. Provide conduit seal fittings where indicated on the Drawings. Conduit seals shall be of rigid galvanized steel. Seals in horizontal conduit installations shall be Thomas & Betts EYS, Appleton Type ESU, Crouse Hinds Type EYS, or equal. Seals in vertical conduit installations shall be Thomas & Betts EYD, Appleton Type SF, Crouse Hinds Type EYD, or equal, with continuous drain. When installing conduit seals make provision for percent fill space reduction in accordance with CEC.

2. Install sealing compound after wire has been installed. Ensure drain is not blocked in vertical seals when installing compound. Where conduit seals are installed in hazardous area applications, there shall be no conduit coupling, fitting, etc., between seal and boundary of hazardous area.

E. Penetration in Fire-Rated Structures: Provide 3M, or equal, sealant and fire barriers for installing fire-rated seals around penetrations through floors, walls, and elevator hoistways. Fire stop system must be UL, or another NRTL listed, and classified for through-penetration applications of metallic conduits and busways.

F. Pull Wires: Install 1/8 inch polypropylene cords in empty or spare conduits.

PART 3 - EXECUTION

3.01 CONDUIT INSTALLATION

A. General Requirements:

1. Provide complete and continuous systems of metallic conduit, outlet boxes, junction boxes, fittings and cabinets for systems of electrical wiring including lighting, power, and signal systems, except as otherwise specified.

2. EMT may be installed in interior concealed applications and in areas approved by owner. EMT shall not be installed in concrete, directly buried underground, outdoors, in boiler rooms, elevator pits, or where subject to damage.

3. Conduits in stud walls, in furred spaces less than 25' in length or for final connection to recessed fixtures or to motors or moving or vibrating equipment shall be flexible conduit in dry locations and liquid-tight flexible conduit in damp locations or where exposed to weather

   Flexible Steel conduit shall not exceed 1-1/2 inches in size.

4. Exposed conduits in Mechanical, Pool equipment rooms Chemical rooms, and where subject to corrosive environment, shall be Galvanized Rigid Steel. GRS.

5. Liquid-tight flexible steel conduit shall only be installed, except where otherwise specified, for final connection of motor terminal boxes, shop equipment, cafeteria equipment, HVAC equipment and other equipment, or for frequent interchange, and shall be of sufficient length, not exceeding 36 inches, to permit full travel or adjustment of motor on its base. Liquid-tight flexible conduit shall not be used for equipment not requiring adjustment or frequent interchange.

6. Connectors for flexible metal conduit shall be made of steel, and of the types which threads into convolutions of conduit. Connectors for watertight flexible metal conduit shall be as required for installation and shall be installed to provide a watertight connection.

7. Exposed conduit where indicated, shall be installed vertically and horizontally following the general configuration of the equipment, using cast threaded hub conduit fittings where required and shall be clamped to equipment with suitable iron brackets and one hole pipe strap.

8. Underground feeder distribution and branch circuit conduits for systems shall be non-metallic PVC conduit, except where otherwise specified or indicated.

9. Conduit shall be concealed unless otherwise indicated. Conduits exposed to view, except those in attic spaces and under buildings, shall be installed parallel or at right angles to structural members, walls, or lines of building. Conduits shall be installed to clear access openings.

10. Running threads are not permitted. Provide conduit unions where union joints are necessary. Conduit shall be maintained at least six inches from covering of hot water and steam pipes and 18 inches from flues and breechings. Open ends of conduits shall be sealed with permitted conduit seals during construction of buildings and during installation of underground systems. Furnish and install pull boxes where required by Code and where necessary in the raceway system to facilitate conductor installation. In general, conduit runs of more than 100 ft., or with more

than three right-angle bends, shall have a pullbox installed at a convenient intermediate location. Support boxes independently of raceways, walls and partitions. Boxes shall have removable screw covers and shall be accessible.

11. Where conduits are terminated in groups at panelboards, switchboards, and signal cabinets, etc., provide templates or spacers to fasten conduits in proper position and to preserve alignment. Conduits terminating at signal cabinets shall only enter cabinets in the following locations:

    a. Conduits entering top, side, and bottom of cabinets shall be aligned in a single row, centered two inches from rear of cabinet.

    b. Conduits entering back of cabinet shall be aligned in a single row centered two inches from top of cabinet.

    c. Conduits shall not be spaced closer than three inches on centers.

12. Conduits above metal lath ceilings shall be rigidly suspended with pipe hangers or pipe racks or shall be secured to superstructure with factory fabricated pipe straps. Conduits in metal lath or steel stud partitions shall be tied to furring channels or studs. In ceiling spaces and in partitions, tie wires shall be spaced not more than 5 feet apart, shall fasten conduit tight against channels and studs at point of tie and shall not support any of conduit weight. Tie wire shall be 16 gage galvanized double annealed steel.

13. Where auxiliary supports, saddles, brackets, etc., are required to meet special conditions, they shall be fastened rigid and secure before conduit is attached.

14. Conduit in ceiling spaces, stud walls, and under floors, shall be supported with factory fabricated pipe straps or shall be suspended with pipe hangers or pipe racks. Pipe straps shall be attached to and shall fasten conduit tight at point of support against ceiling and floor joists, rafters, and wall studs, or two-inch x four-inch headers fitted between joists or wall studs.

15. Conduits installed on exposed steel trusses and rafters shall be fastened with factory fabricated conduit straps or clamps, which shall fasten conduit tight against supporting member at point of support.

16. Pipe hangers for individual conduits shall be factory fabricated. Steel rods shall be 3/8 inch for two-inch conduit hangers and smaller and shall be 1/2 inch for 2 ½-inch conduit hangers and larger.

17. Pipe racks for groups of parallel conduits and for supporting total weights not exceeding 500 pounds shall be trapeze type and shall consist of a cross channel, Steel City Kindorf B-900, Unistrut P-1000, equivalent Cooper B-Line or equal, suspended with a 3/8 inch minimum diameter steel rod at each end. Rods shall be fastened with nuts, top and bottom to cross-channel and with square washers on top of channel. Conduits shall be clamped to top for cross-channel with conduit clamps, Steel City Kindorf C-105 or Unistrut P-1111 through P-1124, equivalent Cooper B-Line, or equal. Conduits shall not be stacked one on top of another, but a maximum of two tiers may be on same rack providing an additional cross-channel is installed. Where a pipe rack is to be longer than 24 inches, or if the supported weight exceeds 500 pounds, submit Shop Drawings of installation to the Architect for review.

18. Conduits suspended on rods more than two feet long shall be rigidly braced to prevent horizontal motion or swaying. Installation shall meet zone 4 seismic requirements.

19. Factory fabricated pipe straps shall be one or two-hole formed galvanized clamps, heavy-duty type, except where otherwise specified.

20. Hangers, straps, rods, or pipe supports under concrete shall be attached to inserts set at time concrete is placed, or with approved concrete anchors. Under wood, install bolts, lag bolts, or lag screws; under steel joists or trusses, install beam clamps. Contractor shall submit size of anchors, bolts, screws, and installation method to Architect for approval prior to start of any work.

21. Conduits shall be supported at intervals required by Code, but not to exceed ten feet. One inch and smaller exposed conduits shall be fastened with one-hole malleable iron straps. Perforated straps and plumber's tape is not permitted for the support of conduits.

    Conduits shall be securely fastened in place of maximum 4 foot intervals, and within 12”of every outlet box, hangers, supports, or fastening shall be provided at each elbow and at end of each straight run terminating at a box or cabinet.

22. Conduits stubbed up through a roof or an arcade shall be flashed with a waterproof flashing. Refer to Division 07 for additional requirements.

23. Bushings and locknuts for rigid steel conduit shall be steel threaded insulating type. Setscrew bushings are not permitted.

24. Flex conduits shall be cut square and not at an angle.

25. Routing of conduits may be changed providing length of any conduit run is not increased more than ten percent of the length indicated on Drawings.

B. Slabs on Grade:

1. Unless specifically reviewed by the Architect, conduits 1 ¼-inches and larger are not permitted to be installed in structural concrete slabs. Where conduits are permitted, and are installed in concrete slabs on grade, slabs shall be thickened at bottom where conduits occur to provide three inches of concrete between conduit and earth. Required excavation shall be part of the Work of this section.

2. If concrete slab is five inches or more in thickness with a moisture barrier plastic sheet between earth and slab, one inch and smaller conduits shall be installed in the slab with a minimum of one inch concrete between earth and conduit.

C. Concrete Walls, Beams, and Floors: Provide sleeves where conduits pierce concrete walls, beams, and floors, except floor slabs on grade. Sleeves shall provide 1/2 inch clearance around conduits. Sleeves shall not extend beyond exposed surfaces of concrete and shall be securely fastened to forms. Where conduits pass through walls below grade, seal with required sealant and backer materials between conduit and sleeve to provide a watertight joint. Sealant shall be as indicated in Section 07 9200: Joint Sealants.

D. Underground Requirements:

1. Conduits and multicell raceways installed underground shall be entirely encased in three inch thick concrete on all sides , except where otherwise specified. Provide required spacers to prevent any deflection when concrete is placed and to preserve position and alignment. Conduits and raceways shall be tied to spacers. Anchors shall be installed to prevent floating of conduits and raceways during placing of concrete. Provide red colored concrete to encase conduits of systems operating above 600 volts.

2. Underground conduits and raceways shall be buried to a depth of not less than 24 inches below finished grade to top of the concrete envelope, unless otherwise specified.

3. Assemble sections of conduit with required fittings. Cut ends of conduit shall be reamed to remove rough edges. Joints in conduits shall be provided liquid-tight. Bends at risers shall be completely below surface where possible.

4. Conduits and raceways in a common trench shall be separated by at least three inches of concrete. Electrical power and/or lighting conduit runs installed in a common trench with conduits containing signal system wiring such as public address, telephone, intrusion detection, fire alarm, television, computer networking, and clock systems shall maintain a separation of a minimum of six inches from these types of signal system conduits and raceways. Electrical power, lighting and signal conduits and raceways installed in a common trench with other utility lines such as gas, water, sewer and storm lines shall maintain 12 inches separation from these types of utility lines.

5. The Inspector will observe underground installations before and during concrete placement. A mandrel shall be drawn through each run of conduit in presence of the Inspector before and after placing concrete. Mandrel shall be six inches in length minimum, and have a diameter that is within 1/4 inches of diameter of conduit to be tested.

6. Non-metallic conduit installations shall comply with following additional requirements. Joints in PVC conduit shall be sealed by means of required solvent-weld cement supplied by conduit manufacturer. Non-metallic conduit bends and deflections shall comply with requirements of applicable electrical code, except that minimum radius of any bend or offset for conduits sized from 1/2 inch to 1 ½-inch inclusive shall not be less than 24 inches. Bends at risers and risers shall be PVC-coated rigid steel conduit. Radius of curve of bends or offsets in non-metallic conduit for public telephone system shall be not less than ten times trade size of conduit, unless otherwise specifically permitted.

8. Underground conduit systems provided for utility companies shall be furnished to meet the requirements of the utility companies requiring service.

9. Protect inside of conduit and raceway from dirt and rubbish during construction by capping openings.

10. Add bell-end bushings for conduit stub-up including underground entries to pull boxes, and manholes. Under floor standing switchboards and motor control centers provide a four-inch galvanized nipple with ground bushing.

13. Underground conduits and raceways shall be swabbed prior to wire pull.

3.02 STUBS

A. Panelboard: Install two one inch conduits from each flush mounted panelboard to access under floor space and to access above ceiling space where these conditions occur. Cap conduits with standard galvanized pipe caps.

B. Floor: At points where floor stubs are indicated in open floor areas, for connections to equipment, conduits shall be terminated with couplings, tops

flush with finished floor. Stubs shall extend above couplings the indicated distance. Where capped stubs are designated, couplings shall be closed with cast iron plugs with screw drive slots.

3.03 PROTECTION

A. Protect the Work of this section until Completion.

3.04 CLEANUP

A. Remove rubbish, debris and waste materials and legally dispose of off the Project site.

END OF SECTION

SECTION 26 2200

LOW-VOLTAGE TRANSFORMERS

PART 1 - GENERAL

1.01 SUMMARY

A. Section Includes: This specification covers single-phase and three-phase general purpose individually mounted dry-type transformers, 600 V maximum, for power and lighting applications. It includes transformers as specified and as indicated on Drawings.

B. Work, material or equipment shall comply with the codes, ordinances and regulations of the local government having jurisdiction, including the regulations of serving utilities and any participating government agencies having jurisdiction.

C. Related Requirements:

1. Division 01 - General Requirements.

2. Section 26 0500: Common Work Results for Electrical.

3. Section 26 0513: Basic Electrical Materials and Methods.

4. Section 26 0526: Grounding and Bonding.

5. Section 26 0519: Low-Voltage Wires (600 Volts AC)

6. Section 26 0533: Raceways and Boxes, Fittings and Supports.

D.

E. Codes and Applicable standards: Products and installation shall meet or exceed the latest edition of the following standards.

1. ANSI/IEEE C57.96, Distribution and Power Transformers, Guide for Loading Dry-Type Transformers; Appendix to ANSI C57.12 Standards.

2. Department of Energy, Energy Act of 2005.

3. International Electrical Code adopted by the State of California.

4. ANSI/NEMA 250 Enclosure for Electrical Equipment (1000 Volts Maximum)

5. IEEE C57.12.91, Test Code for Dry-Type Distribution and Power Transformers.

6. IEEE C57.110 – IEEE Recommended Practice for establishing liquid-filled and dry-type power and distribution transformer capability when supplying nonsinusoidal load currents.

7. 1100-IEEE Recommended Practice for Powering and Grounding Sensitive Electronic Equipment.

8. NEMA standard 20, Dry-Type Transformers for General applications.

9. UL 506, Specialty Transformers.

10. UL 1561, Dry-Type General Purpose and Power Transformers.

11. NEMA TP-1, Guide for Determining Energy Efficiency for Distribution Transformers.

12. NEMA TP-2, Standard Test Method for Measuring the Energy Consumption of Distribution Transformers.

13. NEMA TP-3, Standard for the Labeling of Distribution Transformer Efficiency.

14. CSA 802.2-00 Minimum Efficiency Values for Dry Type Transformers

15. California Building Code (CBC)

16. Tri-axial shake test results conducted in accordance with AC156 test protocol.

17. NFPA 70 National Electric Code

F. No requirement of these drawings and specifications shall be construed to void any of the provisions of the above standards. Any conflicts or changes required to the contract documents in order to obtain compliance with applicable codes shall be brought to the immediate attention of the Owner Authorized Representative by the Contractor.

G. ACRONYMS

ANSI American National Standards Institute

AOR Architect of Record

CEC	California Electrical Code
EOR	Engineer of Record
IBC	International Building Code
IEEE	Institute of Electrical and Electronics Engineers
NEC	National Electrical Code
NEMA	National Electrical manufacturers Association

1.02 DESIGN REQUIREMENTS

A. Premium Efficiency transformers with internal losses at 35 percent loading reduced by 30 percent when using temperature and material correction factor to 75 degrees C per NEMA Standard TP1

B. Load Mix: Transformer shall be UL 1561 listed to feed a mix of equipment load profiles such as computer without detracting or significant degradation of efficiency.

C. Construction: Windings shall be continuous wound copper with brazed or welded terminations.

1. Insulation and Varnish Systems: Epoxy Polyester impregnation

2. Terminals, including those for changing taps must be readily accessible by removing a front cover plate.

D. Performance of transformers shall meet or exceed the requirements of applicable codes and standards, the DOE Energy Policy Act of 2005 - Public Law 109-58 and the latest requirements of the California Energy Commission Appliance Efficiency Regulations. In addition; transformers shall be designed to an efficiency standard higher than the lowest legal standard for the purpose of contributing to LEED Energy and Atmosphere (Optimized Energy Performance) and Utility Rebates.

E. Transformers shall be self-cooled type with 220 degrees C. insulation and a maximum temperature rise of 80 degrees C. under continuous full load conditions with an ambient of 40 degrees C.

F. Transformers shall be furnished with four 2.50 percent (two above and two below normal voltage) taps. Windings shall be of fire-resistant type, designed for natural convection cooling through normal air circulation.

G. Core mounting frames and enclosures shall be of welded and bolted construction with sufficient mechanical strength and rigidity to withstand shipping, installation, and short circuit stresses.

H. Enclosure cover plates shall be sheet steel, captive bolted to enclosure framework. Enclosure shall provide suitable ventilating openings with rodent-proof screens, NEMA 1 enclosure. Enclosure shall be provided with lifting lugs and jacking plates as required. Transformers installed outdoors shall be provided with weatherproof NEMA 3R enclosure and weather proof kit.

I. Transformers shall be furnished complete with mounting channels and mounting bolts. Metal parts, excepting cores and core mounting frames shall be furnished clean, rust-proofed, and provided with a coat of an inert primer.

J. Transformers up to 35 KVA shall not exceed 40 decibels. Transformers 36 KVA or more shall be a minimum of 5 decibels below NEMA standards per unit. Transformers shall be provided with vibration dampers consisting of California Dynamic, Mason Industries, Korfund or equal neoprene mounting pad and Elastorib sheeting. Size and number of shock mounts shall be in accordance with manufacturer's recommendations.

K. Transformers shall be UL listed.

L. Each transformer to be installed under this section shall be sound tested at the factory. Contractor shall provide two copies of transformers tests reports for EOR’s review.

M. Equipment shown on drawings to scale is approximate only and based upon a general class of equipment specified. The Contractor shall verify dimensions and clearances prior to commencement of work.

N. Verify points of connection with the manufacturer’s requirements, instructions, or recommendations prior to installation. Actual dimensions, weights, clearances and installation requirements shall be verified and coordinated by the contractor.

1.03 SUBMITTALS

A. Provide in accordance with Division 01.

B. Shop Drawings: Include make, catalog number, dimensions, weight, KVA Rating, Percent Impedance, finish, type, insulation class, design temperature, sound levels, efficiency and taps provided. Include regulation at 80 percent and 100 percent of full load, no-load loss, full-load loss, percent efficiency, percent impedance, noise level and continuous capacity rating.

C. Provide a connection schematic diagram.

1.04 WARRANTY

A. Transformers shall be warranted to be free from defects in materials, fabrication and execution for a period of three years from the date of substantial completion.

PART 2 - PRODUCTS

1.02 EQUIPMENT

A. Transformers manufactured by Siemens, Square D, General Electric, PowerSmiths, MGM, and Cutler Hammer or equal.

B. There shall be no openings through which foreign objects such as sticks, rods, wires, or the like might contact live parts. Provide means for padlocking compartment doors.

PART 3 - EXECUTION

3.01 DELIVERY AND STORAGE

A. Deliver, storage, protect and handle products in accordance with the manufacturer's recommendations.

3.02 INSTALLATION

A. Transformer core frame shall be installed level on shock absorbing pads within enclosure. Comply with seismic requirements of CBC.

B. Mounting bolts on floor mounted transformers shall be extended into pads only and shall not be in direct contact with building structural members.

C. Flexible jumpers shall be installed for grounding continuity from enclosure to conduits or bus ducts where required.

D. Transformers installed outdoors or below grade shall be mounted on concrete pads as specified in Section 03 3000: Cast-In-Place Concrete.

E. Install transformer ventilation openings not closer than 6 inches from wall surfaces.

F. Do not install transformers in corrosive environments such as swimming pool pump and boiler rooms, or similar areas.

3.03 VOLTAGE CHECK

A. Set taps on transformers to provide satisfactory operating voltages with present loads energized, including new loads and existing loads. A check shall be performed in the presence of the Project Inspector at a panel fed from each transformer, which is farthest from transformer. Voltages at transformers ranging from 118 to 122 volts inclusive, for 120 volt systems and proportionately equivalent for higher voltage systems are permitted.

B. Provide instruments and accessories required to perform checks. Voltmeters shall be accurate within .075 percent or one percent and shall have scales permitting voltage readings to be performed on upper half of scale. Calibration of the meters shall be observed by the Project Inspector.

C. Adjust transformer taps under full load operating conditions, to provide normal operating voltages at the loads.

3.04 PROTECTION

A. Protect the Work of this section until Substantial Completion.

3.05 CLEANUP

A. Remove rubbish, debris and waste materials and legally dispose of off Project site.

B. Repair scratched or marred surfaces affected during the execution of work. Repair surfaces shall match original finish.

END OF SECTION

SECTION 26 2416

PANELBOARDS AND SIGNAL TERMINAL CABINETS

PART 1 - GENERAL

1.01 SUMMARY

A. Section Includes: Lighting and power distribution facilities, including panelboards.

B. Related Requirements:

1. Division 01 - General Requirements.

2. Section 26 0500: Common Work Results for Electrical.

3. Section 26 0513: Basic Electrical Materials and Methods.

4. Section 26 2600: Power Distribution Units.

5. Section 26 5000: Lighting.

6. Division 27: Communications.

7. Division 28: Electronic Safety and Security.

1.02 SUBMITTALS

A. Provide in accordance with Division 01.

B. Shop Drawings: Include a front elevation indicating cabinet dimensions, make, location and capacity of equipment, size of gutters, type of mounting, finish, and catalog number of locks. General layout of internal devices, wiring drawings with wire numbers and device connections, vendor cut sheets of devices in enclosure and bill of materials listing description, manufacturer, part number, and quantity of items shall be included.

C. Installation Instructions: Submit manufacturer's written installation instructions.

1.03 DESIGN REQUIREMENTS

A. Panelboards:

1. Panelboards shall be wall-mounted, enclosed safety type with voltage as indicated, three phase, four-wire, solid neutral, mains as indicated on Drawings or specified.

2. Single pole branches shall be molded case, thermal magnetic circuit breakers with inverse time delay, trip free, quick-make, quick-break mechanism and silver alloy contacts. Circuit breakers shall be fully rated, with ampere rating marked on handle and shall indicate on/off and tripped positions. Ground fault interrupters shall be incorporated into circuit breakers where indicated. They shall be listed by UL, or other NRTL as ground fault devices. Provide appropriate lug kit of sufficient size to accommodate the feeders.

3. Two- and three-pole branches shall be enclosed, and shall be thermal magnetic circuit breakers with inverse time delay, tamper-proof, ambient compensated, single handle, internal common trip, and quick-make, quick-break mechanism with silver alloy contacts. Circuit breakers shall be fully rated or as otherwise indicated on the Drawings.

4. Main and subfeeder circuit breakers shall be enclosed, thermal magnetic type with inverse time delay, single handle common trip, quick-make, quick-break mechanism, corrosion-resistant bearings and silver alloy contacts. Ampere frame size and trip rating shall be as indicated on Drawings. Breakers over 225 amperes shall be furnished with interchangeable trip units. Handles of main and subfeeder circuit breakers shall be provided cabinet door. Voltage rating shall be as indicated on Drawings.

5. Circuit breakers shall be fully rated and of one-piece, bolt-on type and shall meet short-circuit interrupting capacity requirements indicated on Drawings6. Internal connections shall be fabricated with plated copper bus bars and the busses shall extend for full length of space available for branch circuit breakers. Feeder cable connectors shall be installed at point of feeder entrance. Terminals shall be furnished with copper conductors. Panelboards fed by conductors having over-current protection greater than 200 amperes shall be protected on supply side by over-current devices having a rating not greater than that of panelboards. Copper bussing shall be fully rated. Heat rated bussing is not acceptable.

7. Except where otherwise indicated, circuit breakers shall be in two vertical rows connected to bus bars in a distributed phase arrangement. Two-pole branches shall be balanced on busses. Single pole branches shall be numbered adjacent to its circuit breaker, with odd numbers on left and even numbers on right.

8. Specified circuit breaker spaces shall be furnished with hardware required for future installation of circuit breakers.

9. Provide locking devices for individual circuit breakers. Padlocking devices shall be secured to circuit breakers and by panel dead front plates.

B. Panelboard Cabinets:

1. Panelboard cabinets shall be code gage galvanized steel or blue steel; fronts, doors, and trims shall be code gage furniture steel. Cabinets shall be furnished with at least six-inch high gutters at top and bottom where feeder cable size exceeds four gage or where feeder cable passes through cabinet vertically. Cabinets shall be furnished with top and bottom gutters sized as required by inspection department having jurisdiction, but never less than six inches where more than one feeder enters top or bottom of cabinets. Side gutters shall not be less than four inches wide. Width of cabinets shall be 20 inches, unless otherwise indicated on Drawings.

2. Doors shall be cut true, shall accurately fit opening and finish smooth across joints. Rabbets shall be inside. Hinges shall be entirely concealed except for barrels and pins. Hinge flanges shall be welded to door and trim. Doors shall be equipped with flush type, spring-latching, locks for metal doors., 3. Where contactors, time switches, and control devices are specified or indicated to be installed within panelboard cabinets, a separate compartment and door shall be provided at top of cabinet for such devices. Door shall be sized as required to permit removal of contactor and other devices intact. Gutters shall be provided at sides and top of compartment. Doors shall be equipped with flush type, spring-latching, locks for metal doors keyed to Park standard keys.

4. Provide and install panelboard manufacturer’s permanent circuit number kit option.

5. Panelboards with control devices in compartment shall arrive at the Project site completely assembled with control devices installed and wired.

6. Outdoor cabinets and cabinets in the Pool Equipment Room shall be NEMA Type 3R. Construction shall be formed from code gage galvanized steel with ANSI No. 61 gray enamel finish. Provide heavy-duty, three point latching, vault type door handles with padlocking provisions. Provide stainless steel or galvanized butt hinges on doors. Padlocks shall be furnished, keyed to Park standard keys.

7. Self-tapping screws and bolts not permitted.

C. Panelboard Schedule: Provide a neatly typewritten schedule with number or name of room or area, or load served by each panelboard circuit. Room numbers or names shall be determined at the Project site and shall not necessarily be those indicated on the Drawings. Schedule shall also indicate panel designation, voltage and phase, building and distribution panel or switchboard from which it is fed. Schedule shall be installed in a frame under transparent plastic 1/32 inch thick on inside of each panelboard cabinet door.

D. Panelboard nameplate: Provide a nameplate identifying panelboard. Plates shall be black and white plastic nameplate stock, with character cut through black exposing white and shall bare designation of service. Name plate shall be mechanically fastened to switchboard.

E. Provide additional labeling on dead-front of panelboard. Label shall be a P-Touch or equal with a minimum width of 3/8 inch with black letters on white background. Label shall re-identify panelboard and also identify name and location of power source feeding this panel. Location information shall include building name if located in different building and name or room location. If power source is installed in same room, label should indicate source name and “In this Room”

F. Panelboard Standards: Panelboards shall be UL, or other NRTL listed and labeled. Panelboards shall meet latest revisions of following standards:

1. California Electric Code, Article 384.

2. UL 67, Panelboards.

3. UL 50, Cabinets and Boxes.

4. UL 943, GFCI.

5. UL 489, Molded Case Circuit Breakers.

6. NEMA PB1.

7. Federal Specifications W-P- 115C and WC-375B.

G. Signal Terminal Cabinets:

1. Signal terminal cabinets shall conform to the Specifications for panelboard cabinets, except as modified herein.

2. Terminal cabinets shall be flush type, with two-inch trim or surface mounted type, as indicated on Drawings. Terminal cabinets shall be furnished with sections and barriers to separate each system. Sections over 24 inches in width shall be provided with double doors and locks. Terminal cabinets, or sections of terminals housing separate systems, shall measure 12 inches long by 18 inches high by 5 ¾-inch deep, unless otherwise indicated on Drawings. Trims for sectional cabinets shall be of one-piece construction.

3. Terminal cabinets shall be furnished with ¾ inch thick plywood. Plywood shall be fastened in place with machine screws or factory installed mounting screws.

4. Flush-mounted terminal cabinets shall be finished as specified for flush-mounted panelboard cabinets. Surface and semi-flush mounted terminal cabinets shall be finished as specified for surface-mounted panelboard cabinets.

PART 2 - PRODUCTS

2.01 MANUFACTURERS

A. Panelboards shall be manufactured by Siemens, General Electric, Eaton, Square D.

PART 3 - EXECUTION

3.01 INSTALLATION

A. Panelboards shall be located so they are readily accessible and not exposed to physical damage.

B. Panelboards installed outdoors and in the Pool Equipment Room shall be specifically listed for wet locations and shall be weatherproof in NEMA Type 3R cabinets.

C. Panelboard locations shall provide sufficient working space around panels to comply with the California Electrical Code.

D. Panelboards shall be securely fastened to structure and mounted on surface by at least four points.

E. Unused openings in cabinets shall be effectively closed as required by the manufacturer.

F. Cabinets shall be grounded as specified in Article 250 of the California Electrical Code.

G. Conduits shall be installed so as to prevent moisture or water from entering and accumulating within the enclosure.

H. Lugs shall be suitable and listed for installation with the conductor being connected.

I. Conductor lengths shall be maintained to a minimum within the wiring gutter space. Conductors shall be long enough to reach the terminal location in a manner that avoids strain on the connecting lugs.

J. Maintain the required bending radius of conductors inside the cabinet.

K. Clean the cabinet of foreign material such as cement, plaster, and paint.

L. Distribute and arrange conductors neatly in the wiring gutters.

M. Use the manufacturer's torque values to tighten lugs.

N. Before energizing panelboards, the following steps shall be taken:

1. Retighten connections to the manufacturer's torque specifications. Verify that required connections have been provided.

2. Remove shipping blocks from component devices and panelboard interiors.

3. Manually exercise circuit breakers to verify they operate freely.

4. Remove debris from panelboard interior.

O. Follow manufacturer's instructions for installation.

P. **Do not install in highly corrosive environments, unless rated for the application**.

3.02 PROTECTION

A. Protect the Work of this section until Completion.

3.03 CLEANUP

A. Remove rubbish, debris, and waste materials and legally dispose of off the Project site.

END OF SECTION

SECTION 26 2419

MOTOR CONTROL DEVICES

PART 1 - GENERAL

1.01 SUMMARY

A. Section Includes: Disconnect switches and motor starters for motors or equipment and connections to the motors.

B. Related Requirements:

1. Division 01 - General Requirements.

2. Division 23: Heating, Ventilating, and Air Conditioning “HVAC”.

3. Section 26 0500: Common Work Results for Electrical.

4. Section 26 0513: Basic Electric Materials and Methods.

5. Section 26 0526: Grounding and Bonding.

1.02 SUBMITTALS

A. Shop Drawings: Include a front elevation, indicating dimensions, make, location and capacity of equipment, type of wiring, size of gutters, type of mounting, size of anchoring bolts and finish. Installation shall be in compliance with CBC seismic design requirements.

B. Product Data: Submit catalogs indicating make, ratings, dimensions, and catalog number for disconnect switches, motor starters, and control devices.

1.03 DESIGN REQUIREMENTS

A. Motor overload protection of manual reset type, as part of a motor starter and set at not to exceed 125 percent of motor full load current rating, shall be provided for each motor exceeding 1/8 horsepower in size except where indicated otherwise and except for following: Motors of sufficient impedance to prevent overheating on failure to start (such as clock motors), and motors provided with an approved built-in manual reset type device, responsive to

motor current and set at not to exceed 125 percent of the motor full load current rating, which will interrupt current to motor.

B. Switchboard components shall be provided with nameplates. Plates shall be black and white plastic stock, with characters cut thorough black exposing white, and shall bear designation of service, feeders controlled, and fuse sizes.

PART 2 - PRODUCTS

2.01 EQUIPMENT

A. Disconnect Switches:

1. Heavy duty type switches shall be 240 volt or 480 volt as required, totally enclosed, externally operated, with quick-make, quick-break operating mechanism, interlock cover, and provisions for locking cover in closed position and locking switch in on and off positions. Switches shall be single-throw, unless otherwise indicated or specified. Switches controlling direct current loads shall be DC rated.

2. Switches shall be furnished with switch blades, which are fully visible in off position when switch door is open. Current carrying parts shall be plated to resist corrosion and promote cool operation. Switches shall be furnished with removable arch suppressors where necessary to permit easy access to line side lugs. Lugs shall be front removable and UL, or other Nationally Recognized Testing Lab listed for 75 degrees C. copper wires.

3. Switch enclosure shall be NEMA Type 1 for indoor locations and rain-tight, NEMA Type 3R, rainproof for outdoor locations and the Pool Equipment Room. NEMA Type 3R enclosures shall be manufactured from galvanized steel with gray baked enamel and shall be furnished complete with rainproof bolt on hubs. Covers shall be attached with pin type hinges. Removable closing cap types are not permitted. Quick release latches shall be permitted only when furnished tamper-resistant to prevent breakage due to vandalism, and furnished with Corbin 66 locks keyed to Corbin 60 key. Switches shall be fusible or non-fusible as indicated on Drawings. Fusible switches shall accept cartridge fuses. Current rating of switches, number of poles, solid neutral facilities, and current rating of fuses shall be as indicated on Drawings. Switches shall

have proper horsepower rating equal to or greater than horsepower of motor controlled. Only lower horsepower rating of dual rated switches will be permitted as a switch rating. Switches shall accept Class H, Class J and Class R fuses.

4. Padlocking device shall lock operating handle and cover with one padlock regardless of on or off position. Switches shall be heavy duty type, as manufactured by Square D, General Electric, Cutler Hammer or equal. Furnish a minimum of two padlocks and two keys with each switch. Padlocks shall be Corbin No. 66 keyed to Corbin No. 60 keys.

5. Switches shall be UL listed and shall comply with NEMA Standard KS-1.

6. Furnish one spare fuse for each fusible disconnect switch installed. Spare fuses shall be same type and rating as those installed.

B. Motor Starters:

1. Motor starters shall be AC magnetic across-line starters unless otherwise indicated on Drawings.

2. AC magnetic across-the-line starters shall be furnished with manual reset thermal overload protective devices including heating elements. Starters shall be furnished in a NEMA Type 1, NEMA Type 3R or other type of enclosure as indicated on Drawings. Starters shall be furnished with HOA selector switches or push-buttons, as indicated on Drawings. NEMA size, voltage rating, number of poles, and special features shall be as indicated on Drawings. Horsepower rating of each starter shall be equal to or greater than motor horsepower. Starters for motor circuits rated at 240 volts and above shall be provided with a control circuit transformer, having a 120 volt secondary. Combination magnetic starters are permitted. Three-phase starters shall be furnished with three-element protection.

3. Manual across-line starters shall be furnished with manual reset thermal overload protective devices, including heating elements, start-stop-reset device or H.O.A. switch as indicated on Drawings, operable from front. Enclosure shall be NEMA Type 1 for indoor installation and NEMA Type 3R for outdoor installation or as indicated on the Drawings. NEMA size, voltage rating and number of poles shall be determined by motor horsepower, voltage and phase indicated on Drawings.

Horsepower rating of each starter shall be equal to or greater than motor horsepower. Combination manual starters are permitted.

4. Thermal switch starters shall be tumbler type with plaster ears, binding screws for wiring, standard size composition cups which fully enclose mechanism, and shall be designed to fit standard outlet boxes. Thermal switches shall be fractional horsepower motor starters with thermal overload protective devices including heating elements and with handle providing on-off-reset control. Horsepower rating, voltage rating, and number of poles shall be determined from motor horsepower and voltage indicated on Drawings. Switches shall be key operated where so indicated on Drawings. Furnish one key with each key type switch. Horsepower rating of each switch shall be equal to or greater than motor horsepower.

5. Relays furnished for directly controlling motors shall be installed in NEMA Type 1 enclosure for indoor installations and NEMA Type 3R for outdoor installations, unless otherwise indicated or specified and shall be horsepower rated. Relay size, voltage rating and number of poles shall be determined from motor horsepower and voltage indicated on Drawings.

PART 3 - EXECUTION

3.01 INSTALLATION

A. Equipment shall be located so that it is readily accessible and not exposed to physical damage.

B. Equipment locations shall provide sufficient working space around the equipment to comply with the California Electrical Code.

C. Equipment installed outdoors shall be specifically approved for wet locations and shall be installed in a weatherproof NEMA Type 3R enclosure.

D. Equipment shall be securely fastened to the mounting surface.

E. Equipment enclosure shall be grounded to comply with Article 250 of the California Electrical Code.

F. Conduits shall be installed so as to prevent moisture or water from entering and accumulating within the equipment enclosure.

G. Lugs shall be suitable and permitted for installation with the conductor being connected.

H. Conductor lengths shall be maintained to a minimum within the wiring space. Conductors shall be long enough to reach the terminal location in a manner that avoids strain on the connecting lugs.

I. Maintain the required bending radius of conductors inside the cabinet.

J. Distribute and arrange conductors neatly within the equipment space.

K. Tightening of wire lugs or any conductor connections shall be performed in the presence of the Project Inspector. Torque values shall be those recommended by manufacturer.

L. Remove shipment blocks from component devices.

M. Manually exercise switches and circuit breakers to verify they operate freely.

N. Remove debris from equipment interior.

O. Follow manufacturer’s instructions for installation.

P. Furnish one spare fuse for each fusible switch installed. Spare fuses shall be of the same type and rating as those installed.

Q. Record Drawings: Submit project record drawings indicating the motor control center exactly as it was installed, including wiring diagrams of components.

R. Installation Instructions: Submit manufacturer's written installation instructions, including recommendations for handling, protection and storage.

S. Installation in corrosive environments such as boiler rooms, pool equipment, and other similar spaces is not allowed.

3.02 PROTECTION

A. Protect the Work of this section until Completion.

3.03 CLEANUP

A. Remove rubbish, debris, and waste materials and legally dispose of off the Project site.

END OF SECTION

SECTION 26 3100

PHOTOVOLTAIC SYSTEMS

PART 1 - GENERAL

1.01 SUMMARY

A. These specifications cover Photovoltaic (PV) System (s) requirements including, but not limited to equipment, hardware, software, documentation, labor, materials, and supervision required for the installation of grid-connected PV systems.

B. Section Includes, but is not limited to the following:

1. Infrastructure, wiring, connections, and testing.
2. Solar panels and panel arrays.
3. Disconnects.
4. DC combiners.
5. Inverters.
6. Monitoring equipment and Control software.
7. Metering equipment and interfacing with utility company meter.
8. Identifications and signs.
9. Training.

1.02 RELATED REQUIREMENTS:

A. Division 01 - General Requirements

B. Division 02: Existing Conditions.

C. Division 05: Metals.

D. Division 06: Woods, Plastics, and Composites.

E. Division 07: Thermal and Moisture Protection.

F. Section 26 0500: Common Work Results for Electrical.

G. Section 26 0513: Basic Electrical Materials and Methods.

H. Section 26 0519: Low Voltage Wires (600 Volt AC).

I. Section 26 0526: Grounding and Bonding.

J. Section 26 0533: Raceways, Boxes, Fittings, and Supports.

K. Division 32: Exterior Improvements.

1.03 REFERENCES

A. Installation, inspections and tests shall be in accordance with the most current applicable codes and standards.

1. ANSI Z21.83 – Solar Photovoltaic Performance and Safety.

2. ANSI C2-1999 – National Safety Code.

3. AMSE PTC 50 – Solar Photovoltaic Performance.

4. ASCE 7-05 – Standard for Minimum Design Loads for Buildings and Other Structures, Chapter 13.

5. CBC – California Building Code.

6. CEC – California Electrical Code.

7. DSA-IR 18 – Division of the State Architect Interpretation of Regulations Document 16-A.

8. IEEE 929-2000 – Recommended Practice for Utility Interface of Photovoltaic Systems.

9. IEEE 1262-195 – Recommended Practice for Qualification of Photovoltaic (PV) Modules and Panels.

10. IEEE 1537 – Standards for Interconnecting Distributed Resources with Electric Power Systems.

11. NFPA72 – National Fire Code.

12. NFPA 853 – Solar Photovoltaic near Buildings.

13. NRTL – Nationally Recognized Testing Laboratory.

14. UL 1703 – Flat-Plate Photovoltaic Modules and Panels.

15. UL 1741 – Standard for Static Inverters and Charge Controllers for Use in Photovoltaic Systems.

16. LADWP Solar Program Guidelines.

1.04 SUBMITTALS

A. Shop Drawings on standard 24 inches by36 inches size shall include but not be limited to:

1. Cover page with legend, common notes, symbol schedule, vicinity and key map, code compliance, contractor and engineer's names and contact information, and drawing index.

2. Site plan showing infrastructure layouts, PV arrays locations, and identifiable features.

3. Riser diagram and General Notes:

a. Connection to utility AC disconnects and main electrical switchboard.

b. Indicate conduits, power and communication wires, and combiners, disconnects, inverters, meters, etc.

c. Provide PV system(s) power production calculations and total system(s) rating.

4. Complete point to point PV System interconnection diagram(s):

a. Identify DC and AC components.

b. Indicate conduit and wire characteristics, sizes and quantities.

c. Indicate conduit fills and voltage drops.

d. Provide combiner box schedule.

e. Provide bill of materials.

5. Floor plans and roof plans showing HVAC equipment, PV arrays, inverters, combiner boxes, disconnects, edge zones, electrical equipment room, roof access hatches, skylights, etcetera.

a. Indicate system(s) interface connections.

b. Provide AC and DC wiring plans.

c. Provide electrical equipment room layouts and equipment elevation details.

6. Assembly Details. Provide as minimum the following details:

a. Array attachment details.

b. Support details and spacing dimensions.

c. Deflector attachment details.

d. Module to module wiring diagrams.

e. DC wire tray attachment and DC combiner mounting details.

f. Data acquisition System (DAS) wiring details.

g. Roof mounted conduit supports and roof penetrations.

h. Grounding details.

i. Warning typical signs details.

1) Utility lockable AC disconnects sign.

2) Interactive system point of interception sign.

3) DC switches warning sign.

4) Solar array warning sign.

7. Operations and Maintenance Manuals.

8. As-built submittal drawings.

9. Installation Instructions of each control device.

10. PC monitoring Workstation.

11. Software licenses and electronic keys.

12. Supplemental local or factory training schedule for post warranty support.

13. A complete list of recommended spare parts with pricing for the Owner's use in keeping the PV system downtime to a minimum.

14. Composite CD ROM with AutoCAD drawings in a "dwg." format.

1.05 QUALITY CONTROL

A. The Contractor shall have a California Solar or Electrical Contractor's license.

1. Components and interconnection wiring shall be installed by state certified electricians. Contractor or Installer's electricians shall be certified in accordance with Labor Code sections 3099, and 3099.2 and section 209.0 of the California Code of Regulations.

B. Contractor shall have adequate experience installing systems of similar size and complexity.

1. Qualifications of Installer: Minimum five years experience installing products and systems of similar scope and complexity.

2. Installer shall have completed at least five projects of equivalent scope and complexity.

3. Installer shall submit certification from the equipment manufacturer indicating that installer is an authorized representative of the equipment manufacturer and is trained on the installations of the specified PV system products.

4. Installer shall maintain a fully equipped service organization capable of furnishing repair service to the equipment.

5. Installer shall furnish a letter from manufacturer of equipment certifying equipment has been installed according to factory standards and that system is operating properly.

6. Contractor shall have completed and commissioned a minimum of five service agreements that provide similar support services to those needed for this project.

7. System startup and testing shall be performed under the direct observation of the Project Inspector and OAR.

C. Materials and equipment installed shall be new and listed as an approved technology by the California Energy Commission (CEC) Emerging Technology Buydown Program.

D. The installer shall provide the system components required by code and for the safety of the District's service personnel.

E. System components shall operate per industry standards.

F. If PV modules using Cadmium are included, then the environmental impact of the Cadmium usage must be disclosed to the District, including any special maintenance requirements, and proper disposal or recycling of modules at the end of their useful life. Modules containing Cadmium must comply with the EPA Landfill Disposal Requirements. Any additional costs related to PV modules containing Cadmium must be clearly identified.

The District may choose at its discretion to reject any Cadmium containing modules.

G. Comply with City of Los Angeles requirements for system commissioning.

1.06 WARRANTY

A. System shall be warranted in accordance with state regulations for photovoltaic systems.

1. The PV System Equipment Manufacturer shall provide a ten year material warranty at 90 percent of its rated power, and 20 years at 80 percent of its rated power.

2. System warranties and materials, fabrication and execution guaranties shall be in effect during the Solar License Agreement.

B. System components (other than PV modules) shall be guaranteed against defects in materials, fabrication and execution for a minimum of three years from date of system acceptance. Provide labor and materials to repair, reprogram, or replace components at no charge to the Owner during the warranty period. Corrective work or system modifications shall be updated on user documentation and archived software disks.

1. Warranty shall include annual on-site inspection, including: system testing (operating current of each electrical system), system adjustments and routine maintenance.

2. Repair or replacement of defective parts.

3. System performance monitoring and historical data access for customer via secure website. Data is required to include: system energy and power production, ambient temperature, wind speed, and insolation.

a. The system shall be connected ahead of the facilities computer network firewall. Provide necessary work, materials and installation to connect the system to the MPOE.

4. Daily system monitoring by vendor, including reporting of problems to customer and dispatch of resources for expeditious resolution of problems.

5. The maintenance agreement shall include a response time of four hours for major system failures (emergency service), and 48 hours for minor repairs (routine service). Proposed agreement shall

include biannual site visits for preventative maintenance inspection so that systems are validated prior to the warranty expiration date.

C. Provide a list of applicable warranties for equipment and components, this list shall include warranty information, names, addresses, telephone numbers, and procedures for filing a claim and obtaining warranty services.

D. Respond to the Owner's request for warranty service within four hours during normal business hours. For calls, submit records of the nature of the call, the work performed, and the parts replaced or service rendered.

1.07 TRAINING

A. Provide a factory employed instructor to provide full instructions to designated District personnel in the system's operation, maintenance, and programming. Training shall be specifically oriented to installed equipment and systems.

1. The instruction period shall be scheduled and coordinated by the OAR.

2. Provide four hours of onsite owner familiarization and training for the installed system. Training shall include system overview, override commands, normal and emergency operation and response, programming features and report generation. District employees attending this training session shall be provided with the following documentation:

a. System layout point to point connection diagram.

b. System components cut sheets.

c. Operations and maintenance data.

d. Safety rules for the operations and maintenance of PV systems.

3. Programmer and maintenance training shall include database entry; trend logs application programs, diagnostic routines, reporting, failure recovery and calibration.

a. Provide a 40 hours training session as follows:

1) Training session shall accommodate a minimum of 20 City of LA personnel and be facilitated at a location no more than 50 miles from the City of LA Headquarters.

Contractor shall obtain Owner's approval for training locations exceeding 50 miles from City of LA headquarters; in such cases, the Contractor shall be responsible for City of LA personnel transportation expenses.

2) Training shall cover instruction, theory, and expose the trainees to system's features, components, architecture, operations, programming, report generation, communications, and any other pertinent information required for the operations and maintenance of the system.

3) Instructor(s) shall give the trainees the opportunity to practice on a simulated or actual (installed) system.

4) The training session shall cover, but not be limited to the following instruction modules or sessions:

   a) System Architecture:

      (1) System layout and components interrelations and hierarchical structure.

      (2) Controllers interfacing and functions.

      (3) Server functionality and data management, error messages, and alarm conditions.

      (4) Connectivity and communication losses.

   b) User Operations:

      (1) Familiarization and system operability.

      (2) Window panes, menus, navigation buttons, alarm response windows, system passwords and accessibility features and options, monitoring and managing data points (inputs, outputs, numeric values, time and date, strings).

      (3) Views: Provide sufficient information as to train City of LA staff on how and where to access programs, functions, adjust or alter diagnostic points and

related data, override messages, reports creation.

c) Trending: Setting trend(s) intervals, accessing data trends and history logs for diagnosis of system performance and reporting. Working with trended data graphical displays, including but not limited to hiding points, setting display types and colors, viewing and setting scales.

d) Graphics: Standard symbols and color codes, graphics customization, how and where to access and manage the system with the graphic displays, including changing points and values, viewing results, mapping to or with other graphic sources and functions, including groups, navigation, sequence of operations, and displays and reports.

e) Alarms: Reading and interpreting alarms, acknowledging and silencing alarms, routing and setting priorities, viewing and responding e-mailed and paged alarms.

PART 2 – PRODUCTS

2.01 ACCEPTABLE MANUFACTURERS

A. Photovoltaic modules systems: The PV modules shall be framed flat-panel crystalline or amorphous silicon modules.

1. The array shall achieve the required kWp DC STC output for the entire system under peak sun conditions. The AC output shall not be less than 80 percent of the DC kWp rating.

2. Each PV module shall include bypass diodes installed in the module junction box.

3. PV modules shall be listed on the California Energy Commission's PTC list and must qualify for eligibility under the California Solar Initiative (CSI) Program, and the LADWP Solar Incentive Program.

4. DC Photovoltaic Panel Output:

a. PV Module Open-Circuit Voltage shall be 45.2V or less.

b. PV String Open-Circuit Voltage shall be 600V or less.

c. Voltage range: Plus or minus ten percent.

5. PV model or arrays:

	MANUFACTURER	MODEL NUMBER	DESCRIPTION
1	ET Solar Industry, Ltd.	ET-P672 -255 to 280	Polycrystalline Module
2	Evergreen Solar Inc.	ES-A-200, 205, 210, 215	String Ribbon solar panel
3	General Electric	GEVp-200-M	Polycrystalline Module
4	Kyocera Solar, Inc.	KD200 P & F Series	Polycrystalline Module
5	REC	Peak Energy Series	Polycrystalline Module
6	Schott Solar, Ic.	SCHOTT POLY 220,225,230,235	Polycrystalline Module
7	Sharp Corporation	ND-L200 Series	Polycrystalline Module
8	Silken California Corp.	SLK60P6L 230, 235	Polycrystalline Module
9	Solar Power Inc./LDK	LDK230	Polycrystalline Module

6. Equal or better PV modules may be submitted for review by the Owner.

B. Inverters:

1. Inverters shall be listed on the California Energy Commission's PTC list and must qualify for eligibility under the California Solar Initiative (CSI) Program, and the LADWP Solar Incentive Program.

2. The PV system shall have at least one inverter. Inverter units shall be solid state device capable of accepting the output of the photovoltaic panels and providing rated output as indicated in construction documents.

a. The inverter shall be equipped with the following items:

1) DC input disconnect.

2) Surge protection.

3) Ground fault interrupter.

4) Isolation transformer.

5) AC output circuit breaker.

6) Data Monitoring System.

3. The inverter shall be able to sustain an overload across its output terminals up to 150 percent load, while supplying any load within its rating and without reducing its output voltage.

4. The inverter shall be capable of at least 300 percent current for short circuit conditions. If the short circuit is sustained, the inverter shall shutdown and disconnect automatically from the load bus.

5. Each inverter unit shall be equipped with fault sensing and static isolation, and with an output circuit breaker for removal of faulted module(s) from the system.

6. Power semiconductors in the inverter shall be fused with fast acting fuses to prevent cascading failures. Each fuse shall be provided with a blown fuse and alarm indicating diodes on the control panel.

7. AC Inverter System Output:

   a. Voltage regulation plus or minus 0.5 percent balance load. plus or minus two percent for 50 percent unbalanced load.

   b. Voltage adjustment range plus or minus five percent manually.

   c. Frequency regulation 0.1 percent.

   d. Phase Displacement:

      1) Balanced load, 120 percent plus or minus one percent.

      2) Fifty percent unbalanced, 120 percent plus or minus three percent.

8. Inverters:

	MANUFACTURER	MODEL NUMBER	DESCRIPTION

1	Advanced Energy Industries, Inc.(AESolaron)	Solaron 333kW (3159000-110)	333 kW 480, or 208 Vac Three Phase Utility Interactive Inverter
2	PV Powered Inc	PVP100KW-480, 208	100kW (480 or 208Vac) 3-Phase Utility Interactive Inverter with 295-600Vdc input
3	SatCon Power Systems Canada Ltd.	S-TYPE AND POWERGATE	225 kW 480, or 208Vac Three Phase Utility Interactive Inverter
4	Xantrex Technology, Inc	GT250-480-PG	250 kW 480 Vac Three Phase Utility Interactive Inverter.

9. Equal or better Energy Commission approved inverters may be submitted for review by the Owner. Installations shall not be allowed without written consent from the Owner. Proposed inverters shall have equal or smaller footprint.

C. Combiner Box: As recommended by the PV modules manufacturer.

1. The system shall have at least a terminal box or boxes, providing the electrical the electrical string(s) a waterproof entry to the conduit leading to the combiner box(es).

2. The terminal box and combiner box can be one physical unit.

3. The PV system shall have a combiner box(es), containing fuses and a bus to combine the outputs of the strings. A set of wires shall run from the combiner box to the inverter(s).

4. Combiner output shall be compatible with inverter input.

D. Edge Connector: As indicated by the PV module manufacturer.

1. Method of electrical interconnection for PV laminates shall be by means of a factory supplied plug connecting cable.

2. Cables measuring 12 to 18 inches shall be supplied with a male-type connector on each end, or with newer technology as recommended by the solar array manufacturer.

3. Each laminated light for PV modules shall be provided with a factory supplied female-type connector.

E. Accessories: Junction boxes, anchors, wiring lugs and other accessories shall be provided in accordance with Division 26 requirements, and in compliance with California Electrical Code requirements and the PV modules manufacturing recommendations.

F. Data Acquisition System: System approved by the California Energy Commission that meets applicable state regulations.

G. System Performance Meters: Provide revenue grade Interval Data Recording (IDR) meters complete with industry standard telemetry for communication with Ethernet, cellular or other common output capabilities. Refer to contract drawings for meter(s) location(s).

1. Provide connection to a password protected website accessible by LAUSD personnel for the purposes of metering, monitoring and data collection of solar production.

2. Meters shall be connected to a monitoring or data collection recording solar production through Time of Use (TOU) increments applicable to the local utility standards, with a minimum 15 minute intervals.

3. Meters:

	MANUFACTURER	MODEL NUMBER	DESCRIPTION
1	AESolaron	Solaron 333kW (3159000-110)	LCD. Performance Based Incentive Program eligibility with certificate documenting accuracy to less than two percent.
2	Elster	AlphaPlus - A1R+	100kW (480 or 208Vac) 3-Phase Utility Interactive Inverter with 295-600Vdc input
3	Leviton	2000, 3000Series	LCD and Remote. Meets Performance Based Incentive Program eligibility with certificate documenting

			accuracy to less than two percent. Unit includes CTs approved by manufacturer for revenue grade applications.
4	Energy Tracking. LLC	WEM-MX-ARV-DBL-EFC	LCD with Backlight. Meets Performance Based Incentive Program eligibility with certificate documenting accuracy to less than two percent. With e-mail, FTP, LAN Reporting. Voltage: Auto Ranging from 120 ~ 480.
5	Fat Spaniel Technologies, Inc/Power-One	Solar Plant Vision	PC or WEB base meter with e-mail, FTP, LAN Reporting. Voltage: Auto Ranging from 120 ~ 480.

4. Equal or better meters listed by the California Energy Commission could be submitted for review. No installations shall be allowed without written consent from the Owner.

2.02 SYSTEM RATING

A. System shall be sized to provide the KW system output indicated on drawings at full load rated power.

B. The systems shall be rated for outdoor installation. The system equipment shall be capable of operating under the locations maximum and minimum documented temperatures during summer and winter times. The entire system must be rated and warranted to withstand and operate under these conditions.

C. Rated PV system capacity must be specified in direct current (DC) kilowatts peak under both STC and PTC conditions.

1. The STC or Standard Test Conditions rating assumes direct current referred as “kWdc-stc”. It is also refer as kilowatts peak, or “kWp”. Specific PV module manufacturer maximum and minimum power data must be specified for this rating.

2. The PTC rating or PV USA Test Conditions rating is based on 1,000 Watts per square meter solar irradiance, 20 degree Celsius ambient temperature and one meter per second wind speed.

2.03 STRUCTURAL IMPACT AND WIND LOADING

A. The PV array weight shall add no more than eight pounds per square foot to the facility roof structure in the array area.

B. The system shall be installed as part of a structural support system designed for the application, and approved by LADBS.

C. PV arrays shall be seismically restrained from falling off the roof or excessive movement on the roof. Panels shall be installed to resist sliding and pop-up resulting from lateral and vertical seismic forces and displacements per CBC.

PART 3 – EXECUTION

3.01 GENERAL

A. PV system shall not be used for any purpose other than its intended functions.

B. Equipment mounted in exterior locations shall be rated NEMA 3R.

C. Semiconductor devices shall be hermetically sealed. Vacuum tubes shall not be used.

D. Relays shall be dust tight.

E. Wiring methods for power distribution and controls shall be as defined in the Division 26 specifications. Wire types shall conform to manufacturers’ recommendations.

F. Bolted connections of bus bars, lugs, and cables shall be in accordance with the requirements of applicable codes and standards.

G. Power connection shall be marked and torque to the required value.

H. Commissioning requirements of Divisions 01 and 26 apply to this section.

I. Coordinate the Work with other aspects of roofing, mechanical, structural, and electrical systems to obtain a complete and operating system.

3.02 SYSTEM INSTALLATION

A. Provide equipment and required wiring. Provide required conductor terminations to devices for a complete system to function as specified and indicated on Drawings. Refer to Section 26 0519: Low-Voltage Conductors (600 Volt AC), for installation and color coding requirements.

B. Terminations shall be in terminal cabinets or on equipment terminals.

C. Conductors shall be installed within conduits, boxes, and terminal cabinets in a totally enclosed installation. Provide conductors required to connect incoming and outgoing circuits.

D. Wiring within equipment and terminal cabinets shall be installed to conform to contract documentation and NFPA 72 standards. Wiring shall be cabled, laced, and securely fastened in place so that no weight is imposed on equipment or terminals.

E. Conductors shall be color-coded per specification section 26 0519 Low Voltage Conductors (600 Volt AC) and tagged with code markers at terminal cabinets, and equipment. A wire index shall be typed and installed on terminal cabinet doors. Index shall be covered with clear plastic adhesive covers. Wiring shall be identified as to building and location of devices.

F. Complete installation shall comply with local building codes, manufacturer’s instructions, and applicable industry standards.

G. Location of boxes and raceways on Drawings is approximate, unless dimensions are indicated. Do not scale Drawings to determine locations and routing of conduits. Location of the infrastructure and equipment shall conform to architectural features of the building and other Work already in place, and must be ascertained in the field before the start of Work.

H. Drawings generally indicate Work to be provided, but do not indicate all bends, transitions or special fittings required to clear beams, girders or other Work already in place. Investigate conditions where conduits are to be installed, and furnish and install required fittings.

I. The roof shall be inspected prior to start of any work. Any observed deficiencies shall be brought up to the attention of the OAR prior to commencing any work.

J. Loose gravel on the area designated for the PV arrays shall be removed. The collected gravel shall be removed.

K. Prepare framing to receive PV modules in accordance with manufacturer's recommendations and in compliance with accepted shop drawings.

L. Adequate ventilation shall be provided to ensure that system components are operated within their environmental ratings.

M. Temperature sensors shall be provided to monitor the temperature of indoor system components, such as Inverters and power monitoring system. Upon detection of temperatures in excess of the manufacturer's recommended operating temperature range, the sensor shall trigger audible and visual alarms.

N. Provide warning signs as required by applicable codes.

3.03 MONITORING

A. Provide an on-site Data Acquisition System (DAS). The DAS shall be equipped to log the information critical to the evaluation of system performance, including AC current energy production, solar irradiance, ambient temperature, and wind speed.

B. The information shall be stored on the logger at 15-minute intervals and transmitted to a City of LA designated processing facility. Information shall be stored and backed-up per CEC and utility company requirements.

C. For the duration of the service agreement between City of LA and the third party monitoring company, data services shall include the processing, quality assurance, storage, and daily backup of system performance data.

D. Provide annual reports of system's performance on the anniversary of the system.

1. The report shall include a full-color chart showing the predicted energy output for a typical year, the predicted energy output for the current year, and the actual energy produced in each month of the year.

2. The report shall be prepared for each individual system in the site, and as an aggregate for the entire site's electrical energy production.

3. The DAS shall include a data logger, modem for data retrieval, NEMA 4 enclosure, dry bulb measuring device, anemometer, solar sensor and radiation shield.

3.04 TESTING

A. A 48 hour notice shall be provided to the Owner authorized Representative (OAR), Project Inspector, and Commissioning Agent before final testing.

B. Demonstrate in presence of the Project Inspector, and Commissioning Agent that circuit and wiring tests are free of shorts and grounds and that installation performs as specified herein and within manufacturer's guidelines.

C. PV modules shall be factory tested for design performance.

D. Inverter shall be factory tested for performance; results shall be included in the Operation and Maintenance Manual.

E. Provide commissioning and system startup.

F. Installer is responsible for identifying required tests, coordinating, scheduling, and conducting tests before Substantial Completion. Tests shall include the following:

1. System response, data logging and transmission, and performance.

2. System features and components under normal operation.

3. System shutdown from utility override switches.

4. Before energizing the cables and wires, check for correct connections and test for short circuits, ground faults, continuity, and insulation.

5. When the system is equipped with optional features, consult the manufacturer manual to determine proper testing procedures.

G. Defects resulting from tests shall be corrected prior to substantial completion.

H. Software Modifications:

1. Provide the services of a factory trained and authorized technician to perform system software modification, upgrades or changes. Response time of the technician to the Project site shall not exceed 24 hours.

3.05 SERVICE MANUALS

A. Contractor shall deliver to OAR, three copies of the service manuals. Each manual shall include the following:

1. Installation manuals, programming manuals, user manuals, and part numbers if applicable for every major system component. Catalog cut sheets are not acceptable.

2. A printed copy of the system configuration, including system labeling codes, and passwords.

3. An electronic copy of the system configuration program on compact disk.

4. Final test report.

5. Detailed explanation of the operation of the system.

6. Instructions for routine maintenance.

7. Detailed wiring diagrams and updated shop drawings that include revisions made in the field via plan changes, RFIs, Field Change Directives, and any other construction change documents including interface details with other systems.

8. Provide a CD ROM electronic copy of the updated system As-Built Drawings to the OAR, prepare this copy in the latest version of AutoCAD; along with the electronic copy provide a full size bond copy. Include one CD-ROM of the up-dated As-Built Drawings into each of the Service Manuals. CD and folded drawings shall be secured and inserted into the Service Manuals via a three-hole punched protective CD case and protective envelopes for the drawings.

9. Materials and required deliverables shall be submitted to the OAR.

3.06 PROTECTION

A. Protect the Work of this section until Substantial Completion.

3.07 CLEANUP

A. Remove rubbish, debris, and waste materials and legally dispose of off Project site.

END OF SECTION

SECTION 26 5000

LIGHTING

PART 1 - GENERAL

1.1 RELATED DOCUMENTS

A. Drawings and general provisions of the Contract, including General and Supplementary Conditions and Division 01 Specification Sections, apply to this Section.

1.2 SUMMARY

A. Section Includes:

1. Interior solid-state luminaires that use LED technology.
2. Lighting fixture supports.

B. Light fixtures model numbers were determined at the time this specification was written; model numbers may need to be modified, or may require the addition or deletion of options to fully meet specification requirements.

C. Related Requirements:

Division 01 - General Requirements.

Section 26 0500: Common Work Results for Electrical.

Section 26 0513: Basic Electrical Materials and Methods.

Section 26 0526: Grounding and Bonding.

Section 26 0519: Low-Voltage Wires (600 Volt AC).

DEFINITIONS

D. CCT: Correlated color temperature.

E. CRI: Color Rendering Index.

F. Fixture: See "Luminaire."

G. IP: International Protection or Ingress Protection Rating.

H. LED: Light-emitting diode.

I. Lumen: Measured output of lamp and luminaire, or both.

J. Luminaire: Complete lighting unit, including lamp, reflector, and housing.

1.3 ACTION SUBMITTALS

A. Product Data: For each type of product.

1. Arrange in order of luminaire designation.
2. Include data on features, accessories, and finishes.
3. Include physical description and dimensions of luminaires.
4. Include emergency lighting units, including batteries and chargers.
5. Include life, output (lumens, CCT, and CRI), and energy efficiency data.
6. Photometric data and adjustment factors based on laboratory tests

    a. Manufacturers' Certified Data: Photometric data certified by manufacturer's laboratory with a current accreditation under the National Voluntary Laboratory Accreditation Program for Energy Efficient Lighting Products.
    b. Testing Agency Certified Data: For indicated luminaires, photometric data certified by a qualified independent testing agency. Photometric data for remaining luminaires shall be certified by manufacturer.

B. Shop Drawings: For nonstandard or custom luminaires.

1. Include plans, elevations, sections, and mounting and attachment details.
2. Include details of luminaire assemblies. Indicate dimensions, weights, loads, required clearances, method of field assembly, components, and location and size of each field connection.

C. Product Certificates: For each type of luminaire.

D. Sample warranty.

1.4 CLOSEOUT SUBMITTALS

A. Operation and Maintenance Data: For luminaires and lighting systems to include in operation and maintenance manuals.

1. Provide a list of all lamp types used on Project; use ANSI and manufacturers' codes.

1.5 QUALITY ASSURANCE

A. Luminaire Photometric Data Testing Laboratory Qualifications: Luminaire manufacturer's laboratory that is accredited under the NVLAP for Energy Efficient Lighting Products.

B. Provide luminaires from a single manufacturer for each luminaire type.

C. Each luminaire type shall be binned within a three-step MacAdam Ellipse to ensure color consistency among luminaires.

1.6 DELIVERY, STORAGE, AND HANDLING

A. Protect finishes of exposed surfaces by applying a strippable, temporary protective covering before shipping.

1.7 WARRANTY

A. Warranty: Manufacturer and Installer agree to repair or replace components of luminaires that fail in materials or workmanship within specified warranty period.

B. Warranty Period: Provide a two year labor warranty.

C. Provide material warranty as specified:

1. Lamps: two years.

2. Ballasts: five years.

3. Standards: one year.

4. Controls: three years.

D. Warranty period begins at substantial completion or project acceptance for beneficial occupancy.

PART 2 - PRODUCTS

2.1 MATERIAL AND FABRICATION

A. Lighting fixtures shall be the type indicated on Drawings and as specified. Fixtures of same ty shall be of one manufacturer.

B. Fixtures shall be of the types and manufacturers described in the FIXTURE TYPES SCHEDULE on the Drawings, with lamps, wattage and voltage as indicated on Drawings Specific manufacturer and model number references are indicated as a standard of performance and quality; other manufacturers' models may be supplied provided the product meets or exceeds the specifications. The alternate fixtures must achieve the same photometric levels and uniformity ratios.

C. All fixtures shall be baked-on enamel or powder-coated, unless otherwise specified in subsections below.

D. Lighting fixtures shall have a minimum luminaire efficiency rating (LER) equal or greater than 75.

E. Seismic Performance: Luminaires and lamps shall be labeled vibration and shock resistant.

2.2 LUMINAIRE REQUIREMENTS

A. Electrical Components, Devices, and Accessories: Listed and labeled as defined in NFPA 70, by a qualified testing agency, and marked for intended location and application.

B. NRTL Compliance: Luminaires for hazardous locations shall be listed and labeled for indicated class and division of hazard by an NRTL.

C. Recessed Fixtures: Comply with NEMA LE 4.

D. Bulb shape complying with ANSI C79.1.

E. CRI of minimum 85. CCT as indicated in the Lighting Fixture Schedule.

F. Rated lamp life of minimum **35,000** hours.

G. Lamps dimmable from 100 percent to 0 percent of maximum light output.

H. Integral driver.

I. Nominal Operating Voltage **120 V AC**

J. Retain "Lens Thickness" Subparagraph below for all diffuser and globe types.

1. Lens Thickness: At least 0.125 inch (3.175 mm) minimum unless otherwise indicated.

PART 3 - EXECUTION

3.1 EXAMINATION

A. Examine substrates, areas, and conditions, with Installer present, for compliance with requirements for installation tolerances and other conditions affecting performance of the Work.

B. Examine roughing-in for luminaire to verify actual locations of luminaire and electrical connections before fixture installation. Proceed with installation only after unsatisfactory conditions have been corrected.

3.2 TEMPORARY LIGHTING

A. If approved by the Architect, use selected permanent luminaires for temporary lighting. When construction is sufficiently complete, clean luminaires used for temporary lighting and install new lamps.

3.3 INSTALLATION

A. Comply with NECA 1.

B. Install luminaires level, plumb, and square with ceilings and walls unless otherwise indicated.

C. Install lamps in each luminaire.

D. Supports:

1. Sized and rated for luminaire weight.
2. Able to maintain luminaire position after cleaning and relamping.
3. Provide support for luminaire without causing deflection of ceiling or wall.
4. Luminaire mounting devices shall be capable of supporting a horizontal force of 100 percent of luminaire weight and vertical force of 400 percent of luminaire weight.

E. Ceiling-Grid-Mounted Luminaires:

1. Secure to any required outlet box.
2. Secure luminaire to the luminaire opening using approved fasteners in a minimum of four locations, spaced near corners of luminaire.
3. Use approved devices and support components to connect luminaire to ceiling grid and building structure in a minimum of four locations, spaced near corners of luminaire.

3.4 IDENTIFICATION

A. Identify system components, wiring, cabling, and terminals.

3.5 FIELD QUALITY CONTROL

A. Perform the following tests and inspections:

1. Operational Test: After installing luminaires, switches, and accessories, and after electrical circuitry has been energized, test units to confirm proper operation.
2. Test for Emergency Lighting: Interrupt power supply to demonstrate proper operation. Verify transfer from normal power to battery power and retransfer to normal.

B. Luminaire will be considered defective if it does not pass operation tests and inspections.

C. Prepare test and inspection reports.

3.6 ADJUSTING

A. Occupancy Adjustments: When requested within 12 months of date of Substantial Completion, provide on-site assistance in adjusting the direction of aim of luminaires to suit occupied conditions. Make up to 2 visits to Project during other-than-normal hours for this purpose. Some of this work may be required during hours of darkness.

1. During adjustment visits, inspect all luminaires. Replace lamps or luminaires that are defective.
2. Parts and supplies shall be manufacturer's authorized replacement parts and supplies.
3. Adjust the aim of luminaires in the presence of the Owner.

END OF SECTION 265119

DIVISION 31

EARTHWORK

SECTION 31 1000
SITE CLEARING

PART 1 - GENERAL

1.1 SUMMARY

A. Section Includes:

1. Removal of vegetation, grass, grass roots, shrubs, tree stumps, trees, upturned stumps, weed growth, tree roots, brush, masonry, concrete, rubbish, debris and other materials.

2. Removal of concrete and bituminous surfaces.

3. Removal of existing fences and gates

B. Related Requirements:

1. Division 01 - General Requirements.

2. Section 31 2200 - Grading.

3. Section 31 2313 - Excavation and Fill.

4. Section 32 0190 – Tree preservation

1.2 SUBMITTALS

A. Shop Drawings: Submit site plan indicating extent of site clearing.

B. Existing conditions: Documentation of existing trees and plantings, adjoining construction, and site improvements that establishes preconstruction conditions that might be misconstrued as damage caused by site clearing.

1. Use sufficiently detailed photographs or videotape

2. Include plans and notations to indicate specific wounds and damage conditions of each tree or other plants designated to remain.

C. Contractor shall be responsible for obtaining all necessary permits, approvals and Construction Manager's authorization for disposal of material resulting from clearing and grubbing operations in areas not already specified in the contract documents.

1.3 QUALITY ASSURANCE

A. Comply with Standard Specifications for Public Works Construction, current edition, as a minimum requirement.

B. Where construction is to be performed in the vicinity of the plan-protection zone, the work shall be carried on in a manner which will cause minimum damage. Under no circumstances are additional trees, outside the limits of grading to be removed without written permission from the City. Trees and shrubbery that are not to be removed shall be protected from injury or damage resulting from the

Contractor's operations. It shall be the responsibility of the Contractor to alert his staff, his suppliers, and all sub-contractors of the intent of these Specifications pertaining to the protection of vegetation. During the execution of his work, the Contractor shall use the same care and protection of all vegetation within their work area.

C. Protection of Persons and Property (existing structures and site improvements).

1. Provide barricades, warning signs at open depressions and holes on adjacent property and public accesses.

2. Provide operating warning lights during hours from dusk to dawn each day or as otherwise required.

3. Protect existing remaining structures, utilities, sidewalks, pavements other facilities from damage as caused by settlement, undermining, washout or other hazards created by site-clearing operations of this Section.

4. Provide and maintain pedestrian and vehicular access in accordance with Work Area Traffic Control Handbook (WATCH), latest edition.

D. Use means necessary to prevent air pollution or dust from becoming a nuisance to the public, to neighbors and to others performing work on or near the job-site. Comply with governing regulations.

E. Maintain access to the job-site, other neighboring property, street and alley at all times.

1.4 DEFINITIONS

A. Clearing: Clearing is defined as removing existing vegetation within the limits of work shown on the plans. All vegetated material generated during clearing shall be hauled off-site to an authorized disposal site.

B. Grubbing: Grubbing is defined as removing sticks, brush, stumps, grass, weeds, roots, decayed vegetated matter, and woody debris resting on or protruding through the ground surface and all objectionable woody matter which is embedded in the underlying soils within the limits of work. All material generated during grubbing is to be hauled off-site to an authorized disposal site.

C. Plant-Protection Zone: Area surrounding individual trees, groups of trees, shrubs, or other vegetation to be protected during construction, and indicated on landscape Drawings.

D. Vegetation: Trees, shrubs, groundcovers, grass, and other plants.

PART 2 - PRODUCTS - NOT USED

PART 3 – EXECUTION

3.1 GENERAL

A. Prior to starting job-site clearing operations in the company of the City Engineer or Consultant Architect, Soil Engineer and Inspector; visit the job site and verify the extent of the work.

3.2 TREE AND STUMP REMOVAL

A. Remove trees and stumps indicated or required to be removed. Remove trees, together with bulk of roots, to a minimum depth of 4 feet below required grade, and within a radius of approximately 7 feet beyond perimeter of trunk at grade.

B. Fill and compact excavation from tree and stump removal. Fill in 6-inch layers, each compacted to 90 percent of maximum density in accordance with ASTM D1557.

1. Back filling shall not commence until the excavation is inspected and tested.

3.3 CONCRETE AND BITUMINOUS SURFACING REMOVAL

A. Break up and completely remove existing concrete surfacing, curbs, gutters, walks and bituminous surfacing to the indicated limits. Cutting shall be performed to a neat and even line with proper tools or a concrete cutting saw. Minimum depth of cut shall be 1½ inches, unless otherwise indicated. Remove concrete broken beyond the indicated limits to the nearest joint or score line, and replace with new concrete to match existing.

3.4 CLEANUP

A. Remove rubbish, debris and waste materials and legally dispose of off the project site.

END OF SECTION

SECTION 31 2200
GRADING

PART 1 - GENERAL

1.1. SUMMARY

A. Section Includes:

1. General exterior grading, cutting and filling, including grading for building area, paving, planting areas, banks and hillsides.

B. Related Requirements:

1. Division 01 - General Requirements.

2. Section 31 1000 - Site Clearing.

3. Section 31 2313 - Excavation and Fill.

4. Section 31 2326 - Base Course.

5. Section 32 9000 - Planting.

1.2. PROJECT REQUIREMENTS

A. General:

1. Haul Routes and Restrictions: Comply with requirements of authorities having jurisdiction over the area.

2. Before grading, contact Underground Service Alert of Southern California (USASC) for information on public buried utilities and pipelines. Retain the services of an underground utility locator for onsite utilities.

PART 2 - PRODUCTS

2.1. MATERIALS

A. Materials shall conform to requirements specified in this and related sections.

PART 3 - EXECUTION

3.1. PREPARATION

A. Protect and maintain installed stakes until their removal is required for the work. Provide replacement grade or location stakes lost or disturbed.

B. Install grade stakes and compare to indicated grades. If discrepancies are found between existing grades and grades indicated on drawings, do not proceed until discrepancies are resolved.

3.2. ROUGH AND FINE GRADING

A. Rough grade area sufficiently high to require cutting by fine grading:

1. Grade area for bituminous surfacing and other paving to the indicated grades, equal to the section of the indicated base and pavement.

2. Slope banks to required finish grades as cut progresses, or leave cuts full and finish grade by mechanical equipment to provide grades and soil densities indicated on the drawings.

3. Rough grade, fill, and compact banks beyond indicated finish grades. Finish grade banks and slopes to indicated grades, and specified soil densities.

4. Grade Only Areas: In areas not indicated to receive pavement, rough grade to approximate finish grades and then scarify, moisten, and roll to obtain required density and indicated finish grades.

5. Tolerances: Finish grades shall be within a tolerance of 0.05 inch per foot above or below grades indicated. Provide an average grade as indicated.

B. Base or Subgrade:

1. After subgrade has been constructed to approximate required grades, scarify to a depth of at least 6 inches:

a. After scarifying, process loosened material to a finely divided condition and adjust moisture content to optimum condition by addition of water, addition and blending of a dry suitable material, or by drying of existing material.

b. Subgrade material shall be compacted by tamping, sheepsfoot rollers or pneumatic tire rollers. Required relative compaction shall be 95 percent minimum for the top 6 inches below subgrade.

c. Install base course in accordance with Section 31 2326 - Base Course.

2. Tolerance of completed grades, of base or subgrade, shall not vary more than 0.03 inch per foot from grades indicated. Provide an average grade as indicated.

3.3. SHORING

A. Provide shoring, as necessary, to properly and safely support earth sides of excavations, existing curbs, sidewalks, gutter, and drives and stairs, against movement and collapse.

B. Design and Calculations: Provide in accordance with requirement of CalOHSA.

C. Remove shoring upon completion of the work of this section, or when no longer needed, unless required otherwise by authorities having jurisdiction.

3.4. EXCESS MATERIAL DISPOSAL

A. Remove rubbish, debris, and waste materials and legally dispose of off the project site.

3.4. PROTECTION

A. Protect the work of this section until substantial completion.

END OF SECTION

SECTION 31 2316
EXCAVATION AND FILL FOR PAVING

PART 1 - GENERAL

1.1. SUMMARY

A. Section Includes:

1. Excavating, backfill, and compacting for paved areas.

2. Installation of fill materials.

B. Related Requirements:

1. Division 01 - General Requirements.

2. Section 31 1000 - Site Clearing.

3. Section 31 2200 - Grading.

4. Section 31 2323 - Excavation and Fill for Utilities.

5. Section 32 2326 - Base Course.

6. Section 32 0117 - Pavement Repair.

7. Section 32 1216 - Asphalt Paving.

8. Section 32 1313 - Site Concrete Work.

1.2. PROJECT REQUIREMENTS

A. Import and export of earth materials:

1. Haul Routes and Restrictions: Comply with requirements of authorities having jurisdiction over the area.

1.3. SUBMITTALS

A. Imported soils: The City Engineer shall obtain initial product sample for testing in accordance with the terms of Article 3.5 of this section.

1.4. QUALITY ASSURANCE

A. Comply with Standard Specifications for Public Works Construction, current edition, except as modified herein.

B. Sampling, testing, and certification of imported and/or exported soils shall be performed in accordance with Section 01 4524 - Environmental Import/Export Material Testing.

1.5. PROJECT CONDITIONS

A. Information on drawings or in soils report does not constitute a guarantee of accuracy or uniformity of soil conditions over the project site.

B. A copy of the foundation investigation and soils report is available for examination at the Architect's office during regular office hours of Architect.

PART 2 - PRODUCTS

2.1. BASE MATERIALS

A. Concrete Slabs on Grade: Provide "Crushed Aggregate Base "as specified in the Standard Specifications for Public Works Construction, Section 200: "Rock Materials," with ¾ inch maximum size aggregates. Provide a 3 inch thick base, unless noted otherwise.

B. Bituminous Surfacing: As indicated on drawings and specified in Section 31 2326 - Base Course.

2.2. FILL AND BACKFILL MATERIALS

A. Fill and backfill materials shall be previously excavated materials or imported fill material, free of clods and stones larger than 3 inches, foreign materials, vegetable growths, sod, expansive soils, rubbish and debris. Material shall conform to these specified requirements and related sections.

B. Fill material, exhibiting a wide variation in consistency and moisture content, shall be blended or aerated to stabilize and upgrade the material.

C. Imported Fill Material:

1. Provide suitable materials, obtained from project site excavations, for earthwork and fill materials. If excavated materials are not of suitable quality, import additional materials as necessary.

2. Imported fill shall be a granular material with sufficient binder to form a firm and stable unyielding subgrade, and shall not have more than 60 percent of fines passing 200 mesh sieve. Material shall have a coefficient of expansion of not more than 2 percent from air dry to optimum moisture content and not more than 6 percent from air dry to saturation. Imported material shall be clean and free of rubbish, debris, and toxic or hazardous contaminants. Adobe or clay soils are not permitted.

D. Other Fill Materials: Brick rubble and broken concrete originating from the project site may be legally disposed of off the project site or incorporated in fill, if reviewed by the City Engineer. Unless otherwise required, no such materials may be imported from outside the project site.

E. Permeable Backfill:

1. Provide permeable backfill material behind retaining structures consisting of gravel, crushed gravel, crushed rock, natural sands, manufactured sand, or combinations of these materials conforming to the following gradations:

Sieve Size:	Percentage Passing:
3/4 inch (19mm)	100
3/8 inch (10mm)	80 to 100
No. 100	0 to 8
No. 200	0 to 3

2. Those portions of fill material passing a No. 4 sieve shall provide a sand equivalent of at least 60.

3. Provided backing for weep holes shall consist of two cubic feet of aggregate in burlap sacks, securely tied. Aggregate shall conform to requirements for No. 3 concrete aggregate as specified in subsection 200-1.4 of the Standard Specifications for Public Works Construction.

4. Permeable Backfill Alternate Materials: Instead of the materials specified for retaining structures backfill, a drainage matting system, Miradrain by Mirafi, Inc., or equal, may be provided if reviewed by the City Engineer

PART 3 – EXECUTION

3.1. SITE PREPARATION

A. Clear the project site as required in Section 31 1000 - Site Clearing.

3.2. PROTECTION

A. Protect and guard excavations against danger to life, limb, and property as required by, but not limited to, Cal-OSHA regulations.

B. Protect adjacent existing improvements, including landscaping, against damage.

3.3. EXISTING UTILITY LINES

A. Protect existing utility lines from damage or displacement.

B. Remove conduits or pipes not in service, exposed during work, unless a minimum cover of 2 feet is provided. Remove concrete, clay or other non-metallic pipe over 8 inches in diameter, unless otherwise indicated.

3.4. EXCAVATION

A. Unclassified Excavations: Comply with the Standard Specifications for Public Works Construction, Section 300: "Earthwork," except as modified herein.

3.5. FILL

A. Unclassified Fill and Compaction: Comply with the Standard Specifications for Public Works Construction, Section 300: "Earthwork," except as modified herein.

B. Provide fill materials as specified in Part 2 - Products. If excavated materials from the project site are not of required quality or sufficient quantity, import additional materials as necessary.

C. In addition to the requirements of this section, import and/or exported materials shall comply with the requirements of Section 01 4524 - Environmental Import/Export Material Testing.

D. Imported fill materials shall be sampled by the City Engineer for compliance with the requirements of Part 2 of this Section.

E. The City Engineer shall submit samples to an approved independent testing laboratory for testing.

F. Initial sampling shall be performed by the City Engineer before importing material to the project site. Identify the location of the source site in addition to the address, name of the person and/or entity responsible for the source site. The City Engineer shall obtain both the initial and additional samples from the identified site, and shall submit samples to the approved independent testing laboratory for testing.

G. The City Engineer shall perform additional sampling during import operations. If the total quantity of import is determined to be greater than 1,000 cubic yards of material, one sample shall be obtained and submitted for testing tested for each 250 cubic yards of imported material. If the total quantity of import is determined to be less than 1,000 yards, one sample shall be obtained and submitted for testing for each 100 cubic yards of imported material.

H. The independent approved testing laboratory shall perform the required tests and report results of tests noting if the tested material passed or failed such tests, and shall furnish copies to the Project Inspector, Architect, Contractor, City Engineer, and others as required. Report shall state tests were conducted under the responsible charge of a licensed State of California professional engineer, and the material was tested in accordance with applicable provisions of the Contract Documents and CBC. Upon completion of the work of this section, the independent testing laboratory and City Engineer shall submit a verified report to the City as required by CBC.

I. Bills of lading or equivalent documentation shall be submitted to the Project Inspector on a daily basis.

J. Upon completion of import operations, provide the City Engineer a certification statement attesting that imported material has been obtained from the identified source site.

3.6. INSTALLATION OF MATERIALS

A. Fill or backfill materials shall be installed in horizontal layers of 6 inches, unless otherwise required. Each layer shall be evenly placed and moistened or aerated as necessary. Unless otherwise reviewed by the City Engineer, each layer of fill material shall cover the length and width of the area to be filled before the next layer of material is installed. Top surface of each layer shall be installed to an approximate level with a crown or crossfall of at least 1 in 50, but no more than 1 in 20. Provide adequate drainage at all times during construction of the work of this section.

3.7. COMPACTING

A. Each layer of fill material shall be compacted by tamping, sheepsfoot rollers, or pneumatic-tired rollers to provide specified relative compaction. At inaccessible locations, provide specified compaction by manually held, operated, and directed compaction equipment.

B. Unless otherwise indicated, compact each layer of earth fill to a relative compaction of at least 95 percent.

C. When fill materials, or a combination of fill materials, are encountered or provided which develop densely packed surfaces as a result of installation or compacting operations, scarify each compacted layer before installing the next succeeding layer.

3.8. INSPECTION AND TESTING

A. The City Engineer will inspect and test excavations, sample material quality as required in Part 2, and observe installation and compaction of fill materials.

B. The City Engineer will sample imported fill materials from their designated source before delivery to the project site.

C. Installation of backfill shall be observed by the City Engineer.

D. The City Engineer will inspect and test excavation work before the installation of fill and/or other materials.

E. Compaction: Test compaction in accordance with ASTM D1557, Method C.

3.9. PROTECTION

A. Protect the work of this section until substantial completion.

3.10. CLEANING

A. Remove rubbish, debris, and waste materials and legally dispose of off the project site.

END OF SECTION

SECTION 31 2319
EXCAVATION AND FILL FOR STRUCTURES

PART 1 - GENERAL

1.1. SUMMARY

A. Section Includes:

1. Excavating, backfilling, and compacting for buildings and structures.

2. Fill materials.

B. Related Requirements:

1. Division 01 - General Requirements.

2. Section 31 1000 - Site Clearing.

3. Section 31 2200 - Grading.

4. Section 31 2616 - Excavation and Fill for Paving.

5. Section 31 2323 - Excavation and Fill for Utilities.

1.2. PROJECT REQUIREMENTS

A. Import and Export of Earth Materials:

1. Haul Routes and Restrictions: Comply with requirements of authorities having jurisdiction over the area.

1.3. SUBMITTALS

A. Imported Soils: The City Engineer shall obtain initial product sample for testing in accordance with the terms of Article 3.05 of this section.

B. Shoring calculations as required in Article 3.03 of this section.

1.4. QUALITY ASSURANCE

A. Comply with the following as a minimum requirement: Standard Specifications for Public Works Construction, current edition, except as modified herein.

B. Sampling, testing, and certification of imported and/or exported soils shall be performed in accordance with Section 01 4524 - Environmental Import/Export Material Testing.

1.5. PROJECT CONDITIONS

A. Information on drawings or in soils report does not constitute a guarantee of accuracy or uniformity of soil conditions over the project site.

B. A copy of the foundation investigation and soils report is available for examination at the Architect's office during regular office hours of Architect.

PART 2 - PRODUCTS

2.1. FILL AND BACKFILL MATERIALS

A. Fill and backfill materials shall be a granular material previously removed from excavation or imported fill material, free of large clods and stones larger than 3 inches, foreign materials, vegetable growths, sod, expansive soils, rubbish and debris. Material shall conform to these specified requirements and related sections.

B. Fill material exhibiting a wide variation in consistency and/or moisture content shall be blended and/or aerated to stabilize and upgrade the material.

C. Imported Fill Material:

1. Provide suitable materials obtained from the project site excavations for earthwork and fill materials. If excavated materials are not of suitable quality or sufficient quantity import additional materials as necessary.

2. Imported fill shall be a granular material with sufficient binder to form a firm and stable unyielding subgrade, and shall not have more than 60 percent of fines passing 200 mesh sieve. Material shall have a coefficient of expansion of not more than 2 percent from air dry to optimum moisture content and not more than 6 percent from air dry to saturation. Imported material shall be clean and free of rubbish, debris and toxic or hazardous contaminants. Adobe or clay soils are not permitted.

D. Other Fill Materials: Brick rubble and broken concrete originating from the project site may be legally disposed of off the project site or incorporated in fill, if reviewed by the City Engineer. Unless otherwise provided, no such materials may be imported from outside the project site.

E. Permeable Backfill:

1. Provide permeable backfill material behind retaining structures consisting of gravel, crushed gravel, crushed rock, natural sands, manufactured sand, or combinations of these materials conforming to the following gradations:

Sieve Size	Percentage Passing
3/4 inch	100
3/8 inch	80 to 100
No. 100	0 to 8
No. 200	0 to 3

2. Those portions of fill material passing a No. 4 sieve shall provide a sand equivalent of at least 60.

3. Provided backing for weep-holes shall consist of 2 cubic feet of aggregate in burlap sacks, securely tied. Aggregate shall conform to requirements for No. 3 concrete aggregate as specified in subsection 200-1.4 of the Standard Specifications for Public Works Construction.

4. Permeable Backfill Alternate Materials: Instead of the materials specified for retaining structures backfill, a drainage matting system, Miradrain by Mirafi, Inc., or equal, may be provided if reviewed by the City Engineer.

PART 3 - EXECUTION

3.1. SITE PREPARATION

A. Clear the project site as required in Section 31 2200 - Site Clearing.

3.2. PROTECTION

A. Protect and guard excavations against danger to life, limb, and property as required by, but not limited to, Cal-OSHA regulations.

B. Protect adjacent existing improvements, including landscaping, against damage.

C. Shore, crib, or lag excavations and earthen banks as necessary to prevent caving-in, erosion or gullying of sides.

D. Divert or de-water excavations until concrete is placed, forms are removed, and backfilling is complete.

3.3. SHORING

A. Provide shoring, as necessary, to properly and safely support earth sides of excavations, curbs, sidewalks, gutter, drives and stairs, against movement and collapse.

B. Design and Calculations: Provide in accordance with requirement of Cal-OHSA. Remove shoring upon completion of work, or when no longer needed.

3.4. EXCAVATION

A. Form sides of footings, pads, grade beams, and slab foundations, unless otherwise indicated. Provide excavations of sufficient size to permit installation and removal of forms and other work as required.

B. Machine-drill excavation for round footings to size and depth indicated. Provide a collar or casing, or other adequate protection, to exclude dirt and debris. Protect excavations with plank covers until concrete is placed.

C. Provide excavation bottoms level and free from loose material. Excavate to indicated or required elevations of undisturbed earth.

D. Provide excavations free from standing water by pumping, draining, or providing protection against water intrusion. If soil becomes soft, soggy, or saturated, excavate to firm undisturbed soil and fill as required. Slope adjacent grades away from excavations to minimize entry of water.

E. Calculate excavation quantities based on elevations or depths indicated on drawings.

F. Provide 2,000 psi concrete for backfill of over-excavated areas to indicated or required elevations.

G. Special preparation of bottom of excavated planes areas: Excavate areas designated on drawings as bottom of excavated planes (B.E.P.), by excavating and filling to indicated grades and elevations.

3.5. IMPORT/EXPORT OF MATERIALS

A. Provide fill materials as specified in Part 2- Products. If excavated materials from the project site are not of required quality or sufficient quantity, import additional materials as necessary.

B. In addition to the requirements of this section, import and/or exported materials shall comply with the requirements of Section 01 4524 - Environmental Import/Export Material Testing.

C. Imported fill materials shall be sampled by the City Engineer for compliance with the requirements of Part 2 of this section.

D. The City Engineer shall submit all samples to an approved independent testing laboratory for testing.

E. Initial sampling shall be performed by the City Engineer before importing material to the project site. Identify the location of the source site in addition to the address, name of the person and/or entity responsible for the source site. The City Engineer shall obtain both the initial sample and additional samples from the identified site and shall submit samples to the approved independent testing laboratory for testing.

F. The City Engineer shall perform additional sampling during import operations. If the total quantity of import is determined to be greater than 1,000 cubic yards of material, one sample shall be obtained and submitted for testing for each 250 cubic yards of imported material. If the total quantity of import is determined to be less than 1,000 yards, one sample shall be obtained and submitted for testing for each 100 cubic yards of imported material.

G. The independent approved testing laboratory shall perform the required tests and report results of tests, noting if the tested material passed or failed such tests, and shall furnish copies to the Project Inspector, Architect, Contractor, City Engineer, and others as required. Report shall state tests were conducted under the responsible charge of a licensed State of California professional engineer and the material was tested in accordance with applicable provisions of the Contract Documents and CBC. Upon completion of the work of this section, the independent testing laboratory and the City Engineer shall submit a verified report to the City as required by CBC.

H. Bills of lading or equivalent documentation will be submitted to the Project Inspector on a daily basis.

I. Upon completion of import operations, provide the City a certification statement attesting that all imported material has been obtained from the identified source site.

3.6. BACKFILLING

A. After concrete has been placed, forms removed, and concrete work inspected, backfill excavations to indicated or required grades. Backfill simultaneously on each side of walls or grade beams. Remove rubbish, debris, and other waste materials from excavations before placing backfill.

B. Before installing any backfill, adequately cure concrete and provide bracing to stabilize structures. Protect waterproofing or dampproofing against damage during backfilling operations with required protection board. Remove bracing as backfill operation progresses.

C. Do not furnish or install expansive soils for below grade building walls.

D. Install each layer of material not to exceed thickness of 6 inches unless otherwise required.

E. Rigidly control the amount of water, to be installed, to provide optimum moisture content for type of fill material furnished. Do not over-saturate or compact by flooding or jetting.

F. Install wall backfill before installing railings and fences on walls.

G. Impervious backfill materials shall be installed in layers along with and by the same methods specified for structure backfill. Impervious backfill materials shall be at the approximate grade and elevation and where exposed to erosion shall be covered with at least a 12 inch layer of fill material as reviewed by the geotechnical engineer.

H. Install weep hole drainage at the backside of walls so the backing completely covers the weep holes, is horizontally centered, and extends at least 12 inches above the bottom of the weep opening. Provide an 8-inch square section of ¼-inch galvanized or aluminum screen, with a minimum wire diameter of 0.03 inch, and install at the backside of each weep hole before installing the backfill material.

I. Where a reviewed drainage matting system is provided instead of permeable backfill for retaining structures, install in accordance with the manufacturer recommendations.

3.7. COMPACTING

A. Compact each layer of fill material by tamping, sheepsfoot rollers or pneumatic-tired rollers, to such extent as to provide specified relative compaction. At inaccessible locations, compact to specified requirements with hand-held, operated and directed compaction equipment.

B. Unless otherwise indicated, compact each layer of fill material to a relative compaction of at least 95 percent.

C. Do not compact by flooding or jetting.

D. When fill materials, or a combination of fill materials, are encountered or provided which develop densely packed surfaces, as a result of installation or compacting operations, scarify each layer of compacted fill before installing the next succeeding layer.

3.8. INSPECTION AND TESTING

A. The City Engineer will inspect and test excavations, sample material quality as required in Part 2, and observe installation and compaction of fill materials.

B. The City Engineer will sample imported fill materials from their designated source before delivery to the project site.

C. Installation of backfill shall be observed by the City Engineer.

D. The City Engineer will inspect and test excavation work before the installation of fill and/or other materials.

E. Compaction: Test compaction in accordance with ASTM D1557, Method C.

F. The Project Inspector will inspect foundation excavations when completed and ready for forms, after forms are in place and before first placement of concrete.

3.9. PROTECTION

A. Protect the work of this section until substantial completion.

3.10. CLEANUP

A. Remove rubbish, debris, and waste materials and legally dispose of off the project site.

END OF SECTION

SECTION 31 2323
EXCAVATION AND FILL FOR UTILITIES

PART 1 - GENERAL

1.1. SUMMARY

A. Section Includes:

1. Excavating, backfilling, and compacting utility trenches such as: water, gas, irrigation, storm drain, sewer lines, concrete-encased conduits, and manholes, vaults, valve boxes, catch basins, underground tanks, thrust blocks, yard boxes, pull boxes and other utility appurtenances.

B. Related Requirements:

1. Division 01 - General Requirements.

2. Section 31 1000 - Site Clearing.

3. Section 31 2200 - Grading.

4. Section 31 2316 - Excavation and Fill for Paving.

5. Section 31 2319 - Excavation and Fill for Structures.

6. Section 32 0117 - Pavement Repair.

7. Section 32 1313 - Site Concrete Work.

8. Section 32 8413 - Potable Water Irrigation.

9. Section 32 8426 - Reclaimed Water Irrigation.

10. Section 33 1100 - Site Water Distribution Utilities.

11. Section 33 3000 - Site Sanitary Sewer Utilities.

12. Section 33 4000 - Storm Drainage Utilities.

13. Division 22 - Plumbing.

14. Division 26 - Electrical.

1.2. PROJECT REQUIREMENTS

A. Import and Export of Earth Materials:

1. Haul Routes and Restrictions: Comply with requirements of authorities having jurisdiction over the area.

1.3. SUBMITTALS

A. Imported Soil: The City Engineer shall obtain initial product sample for testing in accordance with the terms of Article 3.5 of this section.

1.4. QUALITY ASSURANCE

A. Comply with the following as a minimum requirement: Standard Specifications for Public Works construction, current edition except as modified herein.

B. Sampling, testing, and certification of imported and/or exported soils shall be performed in accordance with Section 01 4524 - Environmental Import/Export Material Testing.

1.5. PROJECT CONDITIONS

A. Information on drawings or in soils report does not constitute a guarantee of accuracy or uniformity of soil conditions over the project site.

B. A copy of the foundation investigation and soils report is available for examination at the Architect's office during regular business hours of the Architect.

PART 2 - PRODUCTS

2.1. MATERIALS

A. Bedding material from trench bottom to one foot above the pipe:

1. Sand, gravel, crushed aggregate or native free-draining granular material providing a sand equivalent of at least 30 or a coefficient of permeability greater than 1.4 inches per hour.

2. Sand complying with the specifications for cement concrete aggregates.

B. Backfill Materials:

1. Excavated trench material to be installed for backfilling shall be clean, free of large clods, and stones larger than 2½ inches in any dimension.

2. Cement-sand slurry shall be provided with one sack of cement per cubic yard of the mixture.

3. Imported Fill Material: Imported fill material shall be a granular material with sufficient binder to form a firm and stable unyielding subgrade, and shall not have more than 60 percent of fines passing a 200 mesh sieve. Material shall provide a coefficient of expansion of not more than 2 percent from air dry to optimum moisture content and not more than 6 percent from air dry to saturation. Imported materials shall be clean and free of rubbish, debris, and toxic or hazardous contaminants. Adobe or clay soils are not permitted.

PART 3 - EXECUTION

3.1. GENERAL

A. Before excavation, contact the "Underground Service Alert of Southern California" (USASC) for information on buried public utilities and pipelines. For onsite utilities, retain an underground locating service.

B. Barricade trenches, ditches, pits, sumps, and similar work outside the barricaded working area with chain link fence as specified in Section 01 5000 - Construction Facilities and Temporary Controls, and in accordance with Cal-OSHA standards and requirements.

C. Saw-cut concrete or bituminous paving for trench installation.

D. Trenches over 5 feet in depth shall conform to the Cal-OSHA.

E. Where indicated and required to excavate in lawn areas, protect adjoining lawn areas outside of the work area. Replace or install removed sod, upon completion of backfill, by installing sod level with adjacent lawns. If installation of removed sod fails, furnish sod and install to match existing lawns.

F. Backfill over excavations to the required elevations with earth, gravel, sand, or concrete and compact as required. Provide excavations, free from standing water by pumping, draining, or providing protection against water intrusion. Slope adjacent grades away from excavations to minimize entry of water.

G. Do not install piping lengthwise under concrete walks without review by the City Engineer.

H. Do not excavate trenches parallel to footings closer than 18 inches from the face of the footing, or below a plane having a downward slope of two horizontal to one vertical, from a line 9 inches above bottom of footings.

1. Unless otherwise indicated on drawings, depth of excavations outside the buildings, shall allow for a minimum coverage above top of pipe, tank, or conduit measured from the lowest adjoining finished grade, as follows:

Steel Pipe	24 inches below finished grade
Copper Water Tube	18 inches below finished grade
Cast-Iron Pressure Pipe	36 inches below finished grade
Plastic Pipe (other than waste)	30 inches below finished grade
Tanks or other structures	36 inches below finished grade
Soil, Sewer & Storm Drain	minimum 18 inches below finished grade, and as required for proper pitch and traffic load. (Install polypropylene sewer pipe with at least 24 inches coverage)
Irrigation Pipe:	nonpressure pipe 12 inches, pressure pipe 24 inches

2. Trench width shall provide ample space for fitting and joining. Excavate for piping bells and fittings, bell and spigot pipe, and other fittings.

I. Unless indicated otherwise, excavate trenches to the required depths for utilities, such as pipes, conduits, and tanks, with minimum allowances of 6 inches at the bottom and 6 inches at the sides for bedding of unprotected piping or as required for concrete encasement of conduits as indicated on drawings. Grade bottom of trenches to a uniform smooth surface. Remove loose soil from the excavation before installing sand bedding or concrete encasement.

J. Provide excavations free from standing water by pumping, draining, or providing protection against water intrusion. If soil becomes soft, soggy, or saturated, excavate to firm undisturbed soil and fill as required. Slope adjacent grades away from excavations to minimize entry of water.

K. Provide a minimum clear dimension of 2 inches from sides of wall excavation to outer surfaces of buried pipes or conduits installed in the same trench or outside surfaces of containers and tanks.

L. Backfill shall not be installed until required inspections and testing is completed.

M. Backfill electrical, or other excavated utility trenches located outside of barricaded installation areas, within 24 hours after inspection by the Project Inspector.

N. Install backfill materials in layers, not exceeding 4 inches in thickness, and compact to 95 percent of the maximum density.

O. If materials excavated from the project site are not permitted for trench backfill in paved areas, backfill trenches with a cement-sand slurry mix. Install backfill to an elevation of the existing undisturbed grade plus one inch.

P. Install and compact sand bedding to provide a uniform full length bearing under piping and conduits.

Q. Where portions of existing structures, walks, paving, or other improvements are removed or cut for piping or conduit installation, replace the material with equal quality, finished to match adjoining existing improvements. Repair pavement as specified in Section 32 0117 - Pavement Repair.

3.2. IMPORT/EXPORT OF MATERIALS

A. Provide fill materials as specified in Part 2- Products. If excavated materials from the project site are not of required quality or sufficient quantity, import additional materials as necessary.

B. In addition to the requirements of this section, import and exported materials shall comply with the requirements of Section 01 4524 - Environmental Import/Export Material Testing.

C. Imported fill materials shall be sampled by the City Engineer for compliance with the requirements of Part 2 of this section.

D. The City Engineer shall perform the tests by utilizing an independent approved testing laboratory.

E. Initial sampling shall be performed by the City Engineer before importing material to the project site. Identify the location of the source site in addition to the address, name of the person and/or entity responsible for the source site. The City Engineer shall obtain both the initial sample and additional samples from the identified site and shall submit all samples to the approved independent testing laboratory.

F. The City Engineer shall perform additional sampling during import operations. If the total quantity of import is determined to be greater than 1,000 cubic yards of material, one sample shall be obtained and submitted for testing for each 250 cubic yards of imported material. If the total quantity of import is determined to be less than 1,000 yards, one sample shall be obtained and submitted for testing for each 100 cubic yards of imported material.

G. The independent approved testing laboratory shall perform the required tests and report results of all tests, noting if the tested material passed or failed such tests, and shall furnish copies to the Project Inspector, Architect, Contractor, City Engineer, and others as required. Report shall state tests were conducted under the responsible charge of a licensed State of California professional engineer, and the material was tested in accordance with applicable provisions of the Contract Documents and CBC. Upon completion of the work of this section, the independent testing laboratory and City Engineer shall submit a verified report to the City as required by CBC.

H. Bills of lading or equivalent documentation will be submitted to the Project Inspector on a daily basis.

I. Upon completion of import operations, provide the City a certification statement attesting that imported material has been obtained from the identified source site.

3.3. INSPECTION AND TESTING

A. The City Engineer will inspect and test excavations, sample material quality as required in Part 2, observe installation and compaction of fill materials.

B. Compaction test shall be performed in accordance with ASTM D1557, method "C."

3.4. PROTECTION

A. Protect the work of this section until substantial completion.

3.6. CLEANUP

A. Remove rubbish, debris, and waste materials and legally dispose of off the project site.

END OF SECTION

SECTION 31 2326

BASE COURSE

PART 1 – GENERAL

1.1. SUMMARY

A. Section Includes:

1. Installation of base material.

B. Related Requirements:

1. Division 01 - General Requirements.

2. Section 31 1000 - Site Clearing.

3. Section 31 2200 - Grading.

4. Section 31 2316 - Excavation and Fill for Paving.

5. Section 32 1216 - Asphalt Paving.

6. Section 32 1313 - Site Concrete Work.

1.2. SUBMITTALS

A. Prior to import, submit written certification to the City Engineer that Crushed Miscellaneous Base (CMB) does not contain Polychlorinated biphenyls (PCB) above laboratory detection limits, when tested in accordance with EPA Method 8082, and obtain written approval from jurisdictional agency prior to import at the subject site, refer to Article 2.2 for sampling frequency.

B. Product Data: Submit material source, technical information and test data for base materials. Gradation and quality certifications shall be dated within 30 days of the submittal.

C. Sample: Submit sample of proposed base course material.

1.3. QUALITY ASSURANCE

A. Comply with the following as a minimum requirement: Standard Specifications for Public Works Construction, current edition.

PART 2 - PRODUCTS

2.1. UNTREATED BASE MATERIALS

A. The following base materials shall conform to the requirements of the Standard Specifications for Public Works Construction: Section 200 - Rock Materials.

1. Crushed Miscellaneous Base.

a. CMB meeting requirements of Article 1.2, A, may be used onsite for pavement base only.

b. CMB may be used off site when in accordance to the Greenboook.

B. Materials generated on site shall not be used as a base course material.

2.2. SOURCE QUALITY CONTROL

A. Sampling and testing of imported and/or exported crushed miscellaneous base (CMB) shall be performed in accordance with the following Table 1 schedule:

TABLE 1: MINIMUM SAMPLING FREQUENCY	
Volume (CY)	Sampling Frequency
0 to 500	1 per 100 Cubic Yards
501 to 1,000	1 per 250 Cubic Yards
1,001 to 5,000	1 per 250 Cubic Yards for first 1,000 Cubic Yards 1 per 500 CY thereafter
5,001 to 20,000	12 samples for first 5,000 Cubic Yards 1 per 1,000 Cubic Yards thereafter
over 20,000	1 per 2,000 Cubic Yards for first 20,000 Cubic Yards 1 per 2,500 CY thereafter

2.3. MATERIAL APPROVAL

A. Base material shall be inspected by the Project Inspector for gradation and material content prior to installation. The City may choose to have additional tests performed by the City Engineer before installation.

PART 3 - EXECUTION

3.1. INSTALLATION

A. Install base course material in layers, not exceeding 4 inches in thickness, unless required otherwise. Grade and compact to indicated levels or grades, cut and fill, water and roll until the surface is hard and true to line, grade and required section. Provide a relative compaction of at least 95 percent, unless otherwise required.

B. Grade base course to elevations indicated on drawings, ready to receive surfacing, in accordance with Section 31 2200 - Grading.

3.2. PROTECTION

A. Protect the work of this section until substantial completion.

3.3. CLEANUP

A. Remove rubbish, debris, and waste materials and legally dispose of off the project site.

END OF SECTION

DIVISION 32

EXTERIOR IMPROVEMENTS

SECTION 32 0117
ASPHALT PAVEMENT REPAIR

PART 1 - GENERAL

1.1. SUMMARY

A. Section Includes:

1. Bituminous Surfacing Repair: Areas removed for utility trenches, heaved by tree roots, cracked areas, protruding areas where pavement meets hard surfaces, depressed areas, holes and areas around new structures, and raveled bituminous pavement.

B. Related Sections:

1. Division 01 - General Requirements.

2. Section 01 3593 - Off-site Improvement Procedures.

3. Section 31 2200 - Grading.

4. Section 31 2316 - Excavation and Fill for Paving.

5. Section 31 2319 - Excavation and Fill for Structures.

6. Section 31 2323 - Excavation and Fill for Utilities.

8. Section 31 2326 - Base Course.

9. Section 32 1216 - Asphalt Paving.

10. Section 32 1313 - Site Concrete Work.

11. Section 32 1236 - Seal for Bituminous Surfacing.

1.2. SUBMITTALS

A. Shop Drawings: Submit Shop Drawings indicating areas to be repaired.

B. Product Data: Submit manufacturer’s technical data for materials and products.

1.3. QUALITY ASSURANCE

A. Comply with Standard Specifications for Public Works Construction, current edition.

PART 2 - PRODUCTS

2.1. MATERIALS

A. Base Course Materials: Section 31 2326 - Base Course.

B. Asphalt Paving Materials: Section 32 1216 - Asphalt Paving.

C. Seal Materials: Section 32 1236 - Seal for Bituminous Surfacing.

D. Headers: Section 32 1216 - Asphalt Paving.

2.2. BITUMINOUS MATERIALS

A. Provide materials and products of the class, grade or type indicated, conforming to relevant provisions of Section 203 - Bituminous Materials of the latest Standard Specifications for Public Works Construction.

PART 3 - EXECUTION

3.1. PAVEMENT REMOVAL

A. Remove bituminous and concrete pavement in accordance with applicable provisions of Section 300 - Earthwork of the Standard Specifications for Public Works Construction.

B. Pavement Heaved by Roots: Remove pavement to limits of distortion and expose roots. Trim roots to provide at least 12 inches clearance to pavement.

C. Remove protruding bituminous surfaces flush with the surrounding grade, using a suitable tool or equipment, so that adjacent finishes are not blackened.

D. Remove raveled and depressed bituminous pavement to limits indicated or required.

E. Saw cut existing improvements, trim holes and trenches in bituminous and concrete pavement to permit mechanical hand tampers to compact the fill.

F. Remove broken concrete by saw cutting. If the required cut line is within 30 inches of a score, joint line, or edge, cut and remove to the score, joint line, or edge.

3.2. EXCAVATING, BACKFILLING AND COMPACTING

A. Conform to requirements in Section 31 2313 - Excavation and Fill; Section 31 2316 - Excavation and Fill for Paving; Section 31 2319 - Excavation and Fill for Structures; or Section 31 2323 - Excavation and Fill for Utilities, as required.

B. Where subgrade or base is deemed to be unstable or otherwise unsuitable, excavate such materials to firm earth, and replace with a required material. Install and compact fill materials in accordance with the requirements of related specification sections.

3.3. HEADERS

A. Install headers along edge of bituminous surfacing abutting turf, earth, or planting area, unless indicated otherwise.

B. Install headers so the bottom surface has continuous bearing on solid grade. Where excavation for headers is undercut, thoroughly tamp soil under the header. Compact backfill on both sides of header to the density of the adjacent undisturbed grade.

C. Fasten headers in place with redwood or Douglas fir stakes of length necessary to extend into solid earth a minimum of 12 inches. Stakes shall be of sound material, neatly pointed, driven vertically, and securely nailed to headers. Space stakes, not to exceed 4 feet on centers, with top of stakes set one inch below top of header. Provide a minimum of two 12d galvanized common nails through each stake.

D. Remove existing headers where new surfacing is installed adjacent to existing surfacing.

E. Install temporary headers at transverse joints of paving where continuous paving operations are not maintained.

F. Provide additional stakes and devices as required to fasten headers.

3.4. BASE COURSE

A. Unless otherwise indicated, base course shall be crushed aggregate base, fine grade, and 3 inches thick or equal to thickness of the existing base whichever is greater.

B. Fill grade and compact as specified in Section 31 2200 - Grading.

3.5. RESURFACING

A. Holes and Trenches: Remove loose dirt and backfill with cement-sand slurry allowing for surfacing one inch thicker than existing. Resurface flush with existing adjoining pavement, installing the same type of materials, and section provided in existing improvements.

B. Other Areas: Other surface improvements damaged or removed shall be cut to a neat even line and excavated one inch below the bottom of the existing pavement. Resurface by following the original grades and installing the same type of materials provided in existing improvements.

C. Where bituminous surfacing abuts concrete, masonry, walks or paving, tamp joint smooth, if necessary, as described above to obtain a uniformly even joint true to line and grade. Tamp and smooth materials before asphalt cools.

3.6. REPAIRING AND RESEALING EXISTING SURFACES

A. Preparation of Surfaces: Prior to filling cracks, clean existing bituminous surfacing of loose and foreign materials and coat with a film of asphalt emulsion.

B. Repair of Existing Surfacing:

1. Fill cracks ½ inch wide or less with RS-1 emulsion and silica sand or other required material. Cracks larger than ½ inch wide shall be filled with Type C2 Asphalt Concrete as specified. Cracks shall be filled to the level of adjacent surfacing.

2. Where low areas, holes, or depressions occur in existing surfacing, repair with emulsified asphalt. Install material, strike off the emulsified asphalt with a straightedge flush with

adjoining surfacing. Finish with a steel trowel, and after dehydration, compact by rolling or tamping.

C. Testing: Flood test the entire area in presence of the Project Inspector. Entire area tested shall be free of standing water or puddles.

D. Surface Seal: After surface has been repaired and tested, install seal coat over entire area indicated. Surface seal shall be as specified in Section 32 1236 - Seal For Bituminous Surfacing.

3.7. CLEANING

A. Remove all stains, on the project site and adjacent properties, caused by or attributed to the work of this section.

B. Remove rubbish, debris, and waste materials and legally dispose of off the project site.

3.8. PROTECTION

A. Protect the work of this section until substantial completion.

END OF SECTION

SECTION 32 1216
ASPHALT PAVING

PART 1 - GENERAL

1.1 SUMMARY

A. Section Includes:

1. Paving for parking areas, areas between buildings, and adjacent to planting and turf areas as indicated.

B. Related Requirements:

1. Division 01 - General Requirements.

2. Section 31 2200 - Grading.

3. Section 32 0117 - Pavement Repair.

4. Section 31 2326 - Base Course.

5. Section 32 1236 - Seal for Bituminous Surfacing.

6. Section 32 1313 - Site Concrete Work.

1.2 SUBMITTALS

A. Shop Drawings: Submit site plan indicating extent of paving and accessories.

B. Product Data: Manufacturer’s technical data for materials and products.

1.3 QUALITY ASSURANCE

A. Comply with the following as a minimum requirement: Standard Specifications for Public Works Construction.

1.4 PROJECT CONDITIONS

A. Information on drawings or in soils report does not constitute a guarantee of accuracy or uniformity of soil conditions over the project site.

B. A copy of the soils report is available for examination in the office of the Architect during regular office hours of the Architect.

PART 2 - PRODUCTS

2.1 BITUMINOUS MATERIALS

A. Provide materials of the class, grade, or type indicated on the drawings, conforming to relevant provisions of Section 203 - Bituminous Materials of the Standard Specifications for Public Works Construction.

B. The asphalt binder to be mixed with aggregate shall be paving asphalt conforming to 203-1. Unless otherwise shown on plans the binder grade shall be as shown in table.

2.2 ASPHALT BINDER

A. Provide asphalt binder grade conforming to relevant provisions of Section 203 - Bituminous Materials of the Standard Specifications for Public Works Construction. Unless otherwise shown on plans asphalt binder grade shall conform to the following

Area	**Binder Grade**
South Coast (Los Angeles Basin, Santa Clarita Valley, Santa Monica Mountains)	PG 64-10

2.3 HEADERS

A. Concrete: Per specification Section 32 1313 - Site Concrete Work.

B. Wood:

1. Redwood, Construction Heart Grade, size 2 by 6, unless otherwise indicated.

2. Stakes: 2 by 4 redwood or 2 by 3 Douglas fir, Construction Grade.

3. Nails: Common, galvanized, 12d minimum.

PART 3 - EXECUTION

3.1 HEADERS

A. Install headers along edge of bituminous surfacing abutting turf, earth, or planting area, unless indicated otherwise.

B. Install headers so the bottom surface has continuous bearing on solid grade. Where excavation for headers is undercut, thoroughly tamp soil under the header. Compact backfill on both sides of header to the density of the adjacent undisturbed earth.

C. Where wood headers are indicated on drawing, fasten headers in place with redwood or Douglas fir stakes of a length necessary to extend into solid grade a minimum of 12 inches. Stakes shall be of sound material, neatly pointed, driven vertically, and securely nailed to headers. Space stakes, not to exceed 4 feet on center, with top of stakes set one inch below top of header. Provide a minimum of two 12d galvanized common nails through each stake.

D. Remove existing headers where new surfacing is installed adjacent to existing surfacing.

E. Install temporary headers at transverse joints of paving where continuous paving operations are not maintained.

F. Provide additional stakes and anchorage as required to fasten headers in place.

3.2 CONSTRUCTION OF ASPHALT CONCRETE PAVEMENT

A. Thickness of Surfacing: Unless otherwise indicated on drawings or specified, install bituminous surfacing to a compacted thickness of 2 inches.

B. Provide surfacing material over base course as specified in Section 31 2326 - Base Course.

C. Surfaces of walls, concrete, masonry, or existing bituminous surfacing indicated to be in direct contact with installed bituminous surfacing shall be cleaned, dried, and uniformly coated with an asphaltic emulsion film.

D. Thicken edges of bituminous surfacing that do not abut walls, concrete, or masonry, and edges that join existing bituminous surfaces. Remove headers at existing bituminous surfacing where new bituminous surfacing is to be installed. Thicken edges an additional 2 inches, and taper to the indicated or specified thickness 6 inches back from such edges.

E. At stairways, adjust thickness of paving such that the first tread is equal in height to all other treads.

F. Provide adequate protection for concrete, planting areas, and other finish work adjacent to areas indicated to receive bituminous surfacing.

G. Placing:

1. Do not install bituminous surfacing when atmospheric temperature is below 40 degrees F or when fog or other unsuitable weather conditions are present. Temperature of mixture at time of installation shall not be lower than 260 degrees F in warm weather or higher than 320 degrees F in cold weather.

2. Where 2-inch or 3-inch thick surfacing is indicated or specified, install surfacing in one course. Where surfacing is indicated or specified to be 4 inches or more in thickness, except for thickened edges, install bituminous surfacing in courses of approximately equal thickness with each course not exceeding 2½ inches in thickness.

H. Stakes or Screeds: Provide grade or screed stakes, spaced not more than 15 feet apart, in flow lines with grades of less than one percent. Continuous screeds may be provided instead of stakes.

I. Spreading: Install bituminous surfacing in a manner to cause least possible handling of mixture. In open areas and wherever practicable, install by mechanical means with a self-propelled mechanical spreader. In confined or restricted areas, install mixture with hot shovels and rakes, and smooth with lutes.

J. Joints: Provide vertical joints between successive runs. Install joints true to line, grade, and cross section. Lapped joints are not permitted.

K. Rolling:

1. Finish roll with a self-propelled tandem roller weighing at least 8 tons. Break down roll with a self-propelled roller weighing between 1-½ and 8 tons.

2. Roll in a manner that preserves flow lines and the established finished grades. Break down roll in areas adjacent to flow lines parallel to flow lines. Break down roll after bituminous surfacing is installed without shoving or cracking of mixture under roller. Continue finish rolling until surfacing is unyielding, true to grade, and meets requirements for specified smoothness. Areas inaccessible to finish roller may be finish rolled with breakdown roller, or tamped with hot tamping irons and smoothed with hot smoothing irons or hand roller.

3. Where bituminous surfacing abuts concrete, masonry, walks or paving; tamp joint smooth, if necessary, as described above to obtain a uniformly even joint, true to line and grade. Tamp and smooth to properly compact.

4. Compacted bituminous surfacing shall be provided with a bulk specific gravity of at least 2.31 when tested in accordance with ASTM D1188.

3.3 TOLERANCE

A. Smoothness: Surface of bituminous surfacing after rolling shall be even, smooth, and uniform in texture with no voids or rock pockets, free of roller marks or other irregularities, and not varying by more than 0.03 foot, except at local depressions or in raised areas as indicated, when a 10-foot straightedge is placed on surface.

B. Grade: Finished grade shall not vary more than 0.02 feet above or below required grade. Variations within prescribed tolerance shall be compensating so that the average grade and cross-section are provided.

C. Premium paving tolerances:

1. General: Test in-place asphalt concrete courses for compliance with requirements or thickness and surface smoothness. Repair or remove and replace unacceptable paving as directed by the City Engineer.

2. Thickness: Tolerances for thickness shall be ¼ inch, plus or minus.

3. Planarity: The asphalt substrate shall not vary from the planned cross slope by more than plus or minus 0.1 percent. The finished asphalt shall not vary, under a 10 feet straight edge, greater than 1/8 inch plus or minus. Flood test the surface with the use of a water truck. If, after 30 minutes on a 70 degree F day, “bird baths” are evident at a depth more than 1/8 inch, repair asphalt.

4. Corrective Measures: Determine if the planarity, cross slopes, and general specifications have been met. If all of the conditions have been met, notify the City Engineer in writing of the acceptance of the asphalt paving.

3.4 TESTING

A. After first coat of surface seal has been installed, and after a 24-hour period, the flood test shall be completed in the presence of the Project Inspector. Repair areas of standing water or puddles and flood test locally. Install surface seal, and retest as necessary.

3.5 SURFACE SEALING

A. After bituminous surfacing has passed flood test, clear and allow to dry, and provide one more coat of surface seal as specified in Section 32 1236 - Seal for Bituminous Surfacing.

B. Where indicated, provide multiple coats of surface seal to existing bituminous surfacing.

C. Where new bituminous surfacing joins existing bituminous surfacing, overlap surface seal a minimum of 12 inches onto existing bituminous surfacing.

3.6 PROTECTION

A. Protect the work of this section until substantial completion.

3.7 CLEANUP

A. Remove rubbish, debris and waste materials and legally dispose of off the project site.

END OF SECTION

SECTION 32 1236
SEAL FOR BITUMINOUS SURFACING

PART 1 - GENERAL

1.1 SUMMARY

A. Section Includes:

1. Surface sealer over bituminous surfacing.

B. Related Requirements:

1. Division 01 - General Requirements.

3. Section 32 0117 - Pavement Repair.

6. Section 32 1216 – Asphalt Paving.

1.2 SUBMITTALS

A. Product Data: Submit manufacturer's product information and application procedures for bituminous surfacing

1.3 QUALITY ASSURANCE

A. Comply with the following as a minimum requirement: Standard Specifications for Public Works Construction.

1.4 MAINTENANCE

A. Extra Materials: Provide 10 gallons in unopened containers.

PART 2 - PRODUCTS

2.1 MATERIALS

A. Provide materials of the class, grade, or type indicated on the drawings, conforming to relevant provisions of Section 203 - Bituminous Materials of the Standard Specifications for Public Works Construction.

2.2 ASPHALT BINDER

A. Provide one of the following surface seals:

Product Name	Manufacturer
1. Guard-Top	CALMAT/Industrial Asphalt
2. Over kote	Diversified Asphalt Product
3. Park Top	Western Colloid Products
4. Sure Seal	Asphalt Coating Engineering
5. Super Drive Top.	SAF-T Seal. Inc.
6. Equal	

PART 3 - EXECUTION

3.1 SURFACE PREPARATION

A. Thoroughly wash surfaces with water to remove dirt, debris, excessive oil and grease, or other foreign matter.

3.2 APPLICATION

A. Install seal coat in strict accordance with manufacturer's written directions and recommendations.

B. Install two coats of surface seal to new bituminous surfacing. First coat shall be installed before flood testing. Clean surface, and allow to dry before installing second coat. Second coat shall be installed after bituminous surfacing has passed flood test.

C. Where new bituminous surfacing is installed adjacent to existing bituminous surfacing, overlap surface seal a minimum of 12 inches onto existing bituminous surfacing.

D. Where existing bituminous surfacing is indicated to be patched and sealed, install two coats of surface seal after patching. Refer to Section 32 1216 - Asphalt Paving.

3.3 PROTECTION OF SURFACES

A. Protect sealed and unsealed surfaces from damage and traffic during performance of the work of this section, and until surface seal has thoroughly set and cured. Do not permit traffic of any kind for at least 24 hours after completion of installation.

B. Protect the work of this section until substantial completion. The manufacturer’s name, and brand name or trademark;

3.4 TESTING

A. The City reserves the right to obtain samples, perform tests to ensure compliance with the specifications, and to review weight slips and invoices of materials delivered to the project site.

3.5 CLEANUP

A. Remove rubbish, debris and waste materials and legally dispose of off the project site.

END OF SECTION

SECTION 32 1313
SITE CONCRETE WORK

PART 1 - GENERAL

1.1. SUMMARY

A. Section Includes:

1. Portland cement concrete pavement, cement walks, curbs, gutters, ramps, mowing strips, fence post footings, catch basins, pipe bedding and encasements, thrust blocks, transition structures, flagpoles and light standard bases and footings.

B. Related Requirements:

1. Division 01 - General Requirements.

2. Section 03 2000 - Concrete Reinforcement.

3. Division 23 - HVAC.

4. Division 26 - Electrical.

5. Section 31 2200 - Grading.

6. Section 31 2316 - Excavation and Fill for Pavement.

7. Section 31 2326 - Base Course.

8. Section 32 0117 - Asphalt Pavement Repair.

9. Section 32 1216 - Asphalt Paving

10. Section 33 1100 - Site Water Distribution Utilities.

11. Section 33 3000 - Site Sanitary Sewer Utilities.

12. Section 33 4000 - Storm Drainage Utilities.

1.2. SUBMITTALS

A. Shop Drawings: Submit plans, elevations and details of concrete site work.

B. Product Data: Submit mix designs and manufacturer’s technical data for materials and products. Submit a 3-inch by 3-inch concrete sample of each specified color.

C. Material Sample: Submit one concrete bumper to the Project Inspector for destructive testing.

1.3. QUALITY ASSURANCE

A. Comply with Standard Specifications For Public Works Construction.

PART 2 - PRODUCTS

2.1. MATERIALS

A. Concrete, Mortar and Related Materials: Comply with applicable provisions of Standard Specifications for Public Works Construction, Section 201 - Concrete, Mortar and Related Materials:

1. Concrete: 28-day compressive strength 2,500 psi, unless specified otherwise.

2. Reinforcing Mesh: ASTM A185, 4 by 4/W1.4 by W1.4 welded wire mesh.

3. Expansion Joint Filler: Preformed expansion joint filler, bituminous type, complying with ASTM D994.

B. Form Materials:

1. Side forms: Douglas fir, construction grade or better or metal forms.

2. Stakes: Douglas fir, construction grade or better or metal stakes.

PART 3 - EXECUTION

3.1. CONSTRUCTION OF FORMS FOR CAST-IN-PLACE STRUCTURES

A. Concrete Pavement: Install Portland cement concrete pavement in compliance with the Standard Specifications for Public Works Construction, Section 302- Roadway Surfacing.

B. Miscellaneous Exposed Concrete: Install concrete curbs, walks, gutters, cross gutters, access ramps, driveways, catch basins, yard boxes, vaults and similar structures, in compliance with the Standard Specifications for Public Works Construction, Section 303 - Concrete and Masonry Construction.

C. Exposed Concrete Bases: Install bases, such as for post, flagpole, light standards and similar bases, in compliance with the Standard Specifications for Public Works Construction, Section 303 - Concrete and Masonry Construction.

D. Post, flagpole, light standard footings below grade, underground conduit bedding, encasements, thrust blocks and similar structures may be placed directly in excavations conforming to the required sizes.

E. Reinforcement installation and concrete placement, surface finishes, curing and removal of forms shall be performed in compliance with applicable provisions of Standard Specifications for Public Works Construction, Section 303 - Concrete and Masonry Construction. Provide heavy broom finish at slopes exceeding 6 percent and medium broom finish at slopes up to 6 percent.

3.2. CLEAN UP

A. Remove rubbish, debris, and waste materials and legally dispose of off the project site.

3.3. PROTECTION

A. Protect the work of this section until substantial completion.

END OF SECTION

SECTION 32 31 19
FABRICATED DECORATIVE METAL FENCES AND GATES

PART 1 - GENERAL

1.01 SUMMARY

A. Section Includes:
   1. Shop-fabricated decorative fences and gates.
   2. Supplementary components and accessories normally furnished or necessary for a complete installation, whether or not such items are indicated on the Drawings or included in the Specifications.

B. Related Requirements:
   1. Section 05 05 13 for shop-applied primer.
   2. Section 05 05 23 for non-structural metal fastenings.
   3. Section 05 50 00 for dissimilar metal corrosion protection.

1.02 SECTION REQUIREMENTS

A. Qualifications:
   1. Fabricator: Company or individuals must have at least 10 years' experience fabricating fences and gates installed on at least 100 previous projects similar to this project in size, material, design, and complexity
   2. Installer: Company or individuals must have at least 5 years' experience installing fences and gates for at least 30 previous projects similar to this project in size, material, design, and complexity.
   3. Welders: Welding personnel and supervisors must comply with the "*Qualification*" requirements of AWS quality standard publications. Only certified welders current in their certification may perform or supervise any welding work.
   4. Supervisors: Individuals must have at least 7 years' experience installing fences and gates for at least 30 previous projects similar to this project in size, material, design, and complexity, including at least 2 years' supervisory experience directing and leading fence and gate installers.

B. Submittals: Submit product data, shop drawings, written descriptions of specified qualifications, and delegated design submittals.

PART 2 - PRODUCTS

2.01 FENCES AND GATES

A. Posts and Rails: Indicated on the Drawings.

B. Infill: Indicated on the Drawings.

2.02 MATERIALS

A. Steel:

1. Steel Plate: ASTM A 36 (mild steel).
2. Hot-Rolled Steel Rods, Bars, and Shapes: ASTM A 36 (mild steel), merchant quality.
3. Steel Structural Tubing: ASTM A 500, Grade A, black, round or shaped hot-formed tubing as indicated, outside diameter or dimensions as indicated, and calculated wall thickness as required by engineering calculations for type of use indicated. Provide seamless tubing.
4. Mechanical Tubing: ASTM A 513, black, Type 5 M.D. (mandrel drawn or Drawn over a Mandrel).

2.03 ACCESSORIES

A. Fastenings: Provide backings, inserts, loose connection hardware, fasteners, anchors, attachments, connectors, and other items supplied, required, recommended, or accepted by the manufacturer for actual in-service conditions applicable to the project.

B. Flanges and Anchors: Unless otherwise indicated, provide cast or formed metal of the same type, material, and finish as the supported metal fabrications.

C. Grout:
1. Description: Pre-packaged, non-shrink, non-metallic, non-corrosive, non-staining, non-gaseous grout conforming to ASTM C 1107, Grade A (drypack) and Grades B and C (flowable grout) of a consistency suitable for application within a 30-minute working time.
2. Type: Grout specifically recommended by the manufacturer for interior and exterior applications.
3. Minimum 28-day Compressive Strength: At least 7,500 pounds per square inch.

D. Other Accessories: Provide accessories and secondary items normally furnished or necessary for a complete installation; or supplied, required, recommended, or accepted by the manufacturer for actual in-service conditions applicable to the project.

2.04 FINISHES

A. Hot-Dip Galvanizing: Specified in Section 05 05 12.

B. Shop Priming: Specified in Section 05 05 13.

PART 3 - EXECUTION

3.01 INSTALLATION REQUIREMENTS

A. General:
1. Ensure proper supervision practices are followed at the project site before the installer begins work and at all times during installation.
2. Verify that in-place construction conforms to the manufacturer’s requirements or recommendations and satisfies all other conditions that might affect the quality of installation or the durability, appearance, or performance of installed items
3. Set fences and gates true to line, to required levels and lines, plumb, square, and cut and fitted without warp or rack; sloped or level as required; with flush well-fitted joints; and in alignment with adjacent construction.
4. Shim as required with concealed shims.
5. Dry-pack fences and gates supported on concrete and masonry to provide firm, level bearing surfaces.

6. Provide temporary bracing or anchors for items indicated as built into concrete, masonry, or similar construction.
7. Fit exposed connections accurately to form flush hairline joints.
8. Securely attach fences and gates in place to supporting construction.

B. Special Techniques:
1. Adjust fences and gates before anchoring to ensure matching alignment at abutting joints.
2. Space posts at spacing indicated or, if not indicated, as required by design loads.
3. Plumb posts in each direction.
4. Secure posts and rail ends by welding directly to steel supporting members.

C. Installation Tolerances: Install fences and gates to an allowable tolerance variation of not more than 1/4-inch from true position and not more than 1/8-inch and from plumb, level, and alignment.

D. Correction and Repair:
1. Correct deficiencies that do not conform to the Contract Documents.
2. Repair non-conforming, damaged, and defective work.

E. Protection:
1. Protect installed fences and gates in place from deterioration and damage until Substantial Completion.
2. Remove protection when it's no longer needed and before Substantial Completion.

END OF SECTION

©AWCWEST 18E22 All rights reserved.
TAGDSC, ELMTB, CLSB1080, CLSB2080, ELMTC, CLSC1090, ELMTG, CLSG2060

SECTION 32 84 00
LANDSCAPE IRRIGATION

PART 1: GENERAL

1.1 REQUIREMENTS

A. Work included in this section: The work shall include all materials, labor, services, transportation, equipment, trenching, laying of pipes and control wires, installation of valves, sprinkler heads, etc., backfill, testing, adjustments, and record drawings so that the finished system is complete in every respect and shall be ready for operation satisfactory to the City.

B. The requirements of the General Conditions, Supplementary General Conditions, and Division 1 apply to this section.

C. Related work not included in this section:
Grading
Landscape planting
Water service to supply points
Electrical (115 volts only for Controller)
Appenix, Protection of Trees

1.2 SHOP DRAWINGS SUBMITTALS

A. Section 01000 – General Requirements and Submittal List

1. Product Data: Indicate materials, construction, configuration, dimensions, and finishes.
2. Assurance/Control Submittals:
Certificates: Manufacturer's certificate that Products meet or exceed specified requirements.

B. Equipment or materials installed or furnished without prior approval of the City Engineer may be rejected and the Contractor may be required to remove such materials from the site at their own expense.

1.3 INTENT OF SPECIFICATIONS

A. It is the intention of these specifications to install an irrigation system free from defects in materials and workmanship.

B. In the event of any discrepancies between the plans and the Specifications, the final decision to be followed shall be made by the City Engineer.

1.4 SCOPE OF WORK

A. The work included in these specifications shall consist of furnishing all labor, tools, materials, appliances, tests, permits, taxes, etc., necessary for the installation of a landscape irrigation system, and the removal of all debris legally from the site.

B. The system shall irrigate all areas and shall be left ready for operation to the satisfaction of the City Engineer.

C. Workmanship shall be first class, competent, and to the satisfaction of the City Engineer.

1.5 GENERAL REQUIREMENTS

A. All local, municipal and state laws, rules and regulations governing any portion of this work shall be made a part of these specifications and their provisions carried out. However, when

specifications or drawings describe materials, workmanship or construction of better quality, or larger size, it shall take precedence over the rules and regulations.

B. Before submitting a bid, each bidder shall carefully examine the irrigation drawings and specifications. Contractors shall visit the site and note all existing conditions and limitations applying to the work and include in bid, a sum sufficient to cover the cost of all items.

C. If the Contractor wishes to substitute a product that is believed to be equal and meets all the mechanical, material, and operational requirements of the products as specified, contractor shall submit a letter stating, (1) the qualifications of the substituted product, (2) reasons for requesting the substitution, (3) the credit the Contractor will offer to the City if such substitution be formally accepted as an equal.

D. The Contractor shall be responsible to cover all pipe openings, valves, etc., before and after being set in place to prevent obstructions in the pipe and valves.

E. The Contractor shall provide all temporary storerooms and shops at the site for safe and proper storage of his materials, tools, etc. These rooms shall be constructed only in locations approved by the City and shall in no way interfere with the work of any other contractor. When these rooms interfere with any installation, it shall be removed and/or relocated by the Contractor at contractor's expense after having been notified by the City Engineer that such removal is necessary.

F. Any existing buildings, equipment, piping, oil lines, pipe coverings, sewers, sidewalks, landscaping, etc., damaged during the course of the work shall be replaced or repaired in a manner satisfactory to the City Engineer and at the Contractor's own expense, and before final payment will be made.

G. The Contractor shall be responsible for damages to the grounds, walks, roads, building, piping systems, electrical systems and their equipment and contents caused by leaks being installed or having been installed. Contractor shall repair, at own expense, all damage so caused. All repair work shall be done in a manner satisfactory to the City Engineer.

1.6 GUARANTEE

A. The entire irrigation system, done under this Contract, shall be guaranteed against all defects and faults or material and workmanship, and sustain in working order for one (1) year from date of completion without expense to the City Engineer.

B. Materials used shall carry a minimum one (1) year manufacturer's guarantee over and above Contractor's guarantee.

C. If, during guarantee period, settlement occurs and adjustments in pipes, valves and sprinkler heads, planting areas or paving are necessary to bring the system to the proper level of the permanent grades, the Irrigation Contractor shall make all adjustments without extra cost to the City Engineer.

D. After the system has been completed, the Contractor shall instruct the City in the operation and maintenance of the system. Contractor shall coordinate all training between the product manufacturer representatives and the City maintenance personnel.

E. In the event the Contractor does not respond to the City's request for repair work under this guarantee within a period of 48 hours, the City may make such repairs as he may deem necessary at the full expense of the Contractor.

PART 2: MATERIALS

All materials shall be new and of size and type as called out on the drawings. All materials of like-kind shall be of one manufacturer. Materials or equipment installed or furnished that do not meet the Landscape Architect's, City's or governing agencies standards will be rejected and shall be removed from the site at no expense to the City

2.1 LIST OF MATERIALS FOR APPROVAL

A. Within 20 days after award of contract, the Contractor shall submit to the City Engineer for approval, four (4) copies of a complete materials list, together with manufacturers' name and numbers covering all material to be furnished under this contract. Contractor shall also furnish 4 copies of descriptive literature with catalog cuts marked with highlighter pen on all items to be used on this project. Digital submittals are preferred, and equipment shall still be marked with highlighter to indicate the specific equipment being ordered. No work shall be commenced before receipt of approved material list and descriptive material. List shall cover items listed below and all items indicated on drawings:

Red brass pipe and fittings
Cast Iron Pipe and ductile iron fittings
Pipe compound
Plastic pipe & fittings
Plastic pipe primer & solvent
Threaded plastic pipe
Teflon tape
Control wire & connectors
Valve operating wrenches
Pressure Regulator
Master Valve
Flow Sensor
Shut-off / isolation valves
Valve boxes
Controllers & Controller Accessories
Remote control valves
Quick coupling valves & couplers
Sprinkler heads
Rotors
Nozzles / Bubblers
Dripline and Dripline Fittings

2.2 SHUT-OFF VALVES

Except when a part of the backflow preventer, ½" through 2" shall be 200 lb. WOG bronze gate valves, non-rising stem, hand wheel, Teflon impregnated packing gland, solid wedge disc.

2.3 VALVE BOXES FOR MAIN SHUT-OFF VALVES

Valve boxes for main shut-off valves shall be of size and type as called out on the drawings.

2.4 MAINLINE

A. All irrigation mainline that is 4" or larger shall use ductile iron fitting, Megalug or equal with CL 150, D18 C900 PVC per drawings and details.

B. Pressure main line piping for sizes 2" – 3" shall be PVC Class 315 with sovent primer and welded joints.

2.5 PIPE AND FITTINGS – RED BRASS

Red brass pipe shall be Federal Specification Number WWP-351, medium weight, IPS, with threads to conform to ASA Specification B2.

2.6 PIPE COMPOUND

Pipe compound shall be pure approved type for metal to metal joints.

2.7 DI-ELECTRIC ISOLATION

Di-electric isolation shall be provided between all connections joining ferrous and non-ferrous metals, or old (existing) ferrous and new ferrous metals. Submit, for approval, type intended for use.

2.8 SOLVENT WELDED PLASTIC PIPE

A. All PVC pipe shall be permanently and continuously marked with manufacturer's name, pipe size (IPS) Class or Schedule, SDR number (Class-pipe only), ASTM (D-2241-69 for Class pipe and D-1785-68 for Schedule pipe), manufacturer's lot number and NSF approval. Pipe with dents, wrinkles, die or heat marks is not acceptable. Pipe shall be delivered to the site in 20-foot lengths.

B. Schedule 40 PVC plastic pipe shall be used for pipe sizes up to and including 2 inch diameter on both the discharge and supply side of control valves. Class 315 PVC plastic pipe shall be used for pipe sizes from 2.5-inch up to and including 3-inch diameter.

2.10 RESTRAINED PLASTIC PIPE

Class 150, DR 18, C900 PVC pipe shall be used for pipe sizes of 4-inch up to and including 10-inch diameter.

2.11 THREADED PVC NIPPLES

Threaded PVC nipples are to be of Schedule 80, Type 1, 4-inch minimum length, except where detailed otherwise on drawings.

2.12 PVC LATERALS (NON-PRESSURE PIPING)

Laterals shall be 1120/1220 normal impact, schedule 40, solvent-weld type PVC pipe.

2.13 PIPE COMPOUND FOR PVC

Threaded connections, including PVC to steel make-up, shall be best grade Teflon tape.

2.14 PRIMER

Primer for PVC solvent weld connections shall be as recommended by the manufacturer of the PVC pipe, to be chemically compatible with the pipe, fittings and solvent.

2.15 SOLVENT

Solvent for PVC solvent weld connections shall be as recommended by the manufacturer of the PVC pipe, to be chemically compatible with the pipe, fittings and primer.

2.16 REMOTE CONTROL VALVES

All remote control valves shall be electrically operated, normally closed, slow closing, 24 VAC 50/60 Hz solenoid actuated globe pattern design, and be installed per the details. The valve body shall be constructed of heavy-duty glass-filled UV-resistant nylon and have stainless steel studs and flange nuts; diaphragm shall be of nylon reinforced nitrile rubber.

2.17 CONTROL WIRE

Control wires to electrically operated solenoid valves shall be direct burial type UF#14 AWG copper, 3/64 inch thick PVC coating. UL approved for Class 2 wiring for 24 volts, 60 cycle AC use UL recognized waterproof connectors to connect control wires to solenoids.

2.18 CONTROL WIRE CONNECTIONS

Control wires to electrically operated solenoid valves shall be direct burial type UF#14 AWG copper, 3/64 inch thick PVC coating. UL approved for Class 2 wiring for 24 volts, 60 cycle AC use UL recognized waterproof connectors to connect control wires to solenoids.

2.19 QUICK COUPLING VALVES AND ASSEMBLIES

Quick couplers shall be 1 inch i.p.s., two piece, brass or bronze construction equipped with a cover, unless otherwise specified on plans. The Contractor shall provide one quick coupler key with hose swivel for each five quick couplers installed. Contractor shall supply a minimum of one quick coupler key with hose swivel, and shall be installed per details.

2.20 VALVE BOXES

Valve boxes shall be concrete with a cast iron locking lid. The cover shall be permanently embossed, "GV" for gate valve, "RCV" for remote control valves, "QC" for quick coupler valves, MV for Master Valves, or FM for Flow Meter. Paint is not acceptable. Contractor shall supply one (1) valve box cover key for each five (5) valve boxes installed. Provide a minimum of two (2) cover keys. Boxes are to be installed per details.

2.21 EMISSION DEVICES: SPRINKLER HEADS, BUBBLERS, DRIPLINE

Irrigation Emitter Devices (Sprinkler heads, bubblers, dripline, etc.) shall conform to make, size, type and performances as called out on the drawings.

2.22 PRESSURE REGULATOR

The system shall be protected with a Pressure Regulator, installed on the inlet side of the backflow preventer. The Pressure Regulator shall conform to make, size, type and performance as called out on the drawings.

2.23 MASTER VALVE

The system shall be protected with the installation and connection of Master Valve, and shall conform to make, size, type and performances as called out on the drawings.

2.24 FLOW SENSOR

The irrigation system shall be protected with the installation and connection of a flow sensor. The make, size, type and performances shall be as called out in the drawings and shall conform to the flow demands of the irrigation system as designed.

2.25 CONTROLLER(S) AND ACCESSORIES

The Irrigation Controller(s) and accessories (including weather station or rain sensors) shall conform to make, size, type and performances as called out on the drawings.

2.26 AIR RELEASE VALVE

1. Install minimum of one air release valve per dripline station.
2. Valve shall be installed per mfg. recommendations.
3. Valve per plan, or approved equal.

2.27 FLUSH POINT

1. Install one flush point at the lowest point in each dripline station. Install in a valve box.
2. Flush point shall be installed per mfg. recommendations.
3. Flush point as indicated in plan, or approved equal.

PART 3: EXECUTION

3.1 NEW PIPELINE INSTALLATION – GENERAL

A. When pipelines run parallel they shall be separated horizontally by a minimum distance of 12". When pipelines cross each other they shall be separated vertically by a minimum distance of 3".

B. No irrigation trenching shall pass closer than eight feet of the base of any tree. No tree root larger than 2" diameter shall be cut without approval of the City Engineer.

3.2 COVER OVER MAINLINES:

A. Maintain 30 inches of cover over mainlines 3” and smaller in diameter. All trenching shall be per details.

3.3 COVER OVER LATERAL LINES:

A. Maintain 24 inches of cover over all lateral lines.

B. Pipe bedding and backfill: bedding shall surround the pipe to two feet above the top of the pipe. Bedding shall be placed in 6 inch lifts. All bedding shall be densified by water jetting. Water jetting shall be sufficient to thoroughly wet bedding material around the pipe. There shall be no rocks over 1/2" in greatest dimension and no organic matter placed in the bedding material. Backfill shall be the material placed above the bedding. Backfill shall be placed in one-foot lifts and densified by water jetting. Jetting shall be continued until backfill collapses and water is forced to the surface. Pipe trenches thoroughly densified by water settling shall have a minimum relative compaction of 85%. There shall be no rocks over 2" in greatest dimension or organic matter in the backfill. Trench areas which exhibit insufficient densification shall be subject to compaction tests as requested by the Contract Administration Inspector or the City Engineer. All such compaction tests shall be at the expense of the Contractor. Additional tests may be required until the 85% minimum compaction is achieved. Finished trenches shall match finish grades flush with adjacent finish grades. The Contractor shall be responsible for maintaining the trenches flush and smooth until final acceptance of the project.

C. The maximum trench width shall be two and a half diameters of the pipe.

3.4 PIPES CROSSING UNDER PAVING:

A. Where irrigation piping crosses a vehicular roadway or other paving having a width of less than 25 feet, a PVC Schedule 40 PVC sleeve which is a minimum of two pipe sizes larger than the piping to pass through it, shall be jacked under the paving at a depth of 36” minimum. Where remote control wiring crosses under paving having a width of less than 25 feet, a 3-inch PVC Schedule 40 PVC sleeve shall be jacked under the paving at a depth of 36” minimum. All sleeves shall extend 3’ (3 feet) minimum beyond the edges of paving.

B. Where irrigation piping crosses a vehicular roadway or other paving having a width greater than 25 feet, a trench shall be excavated across the roadway or paving to accommodate a Class 315 PVC sleeve a minimum of two pipe sizes larger than the piping to pass through it, at a depth of 36” below the bottom of the paving, as measured from the top of the sleeve. Where remote control wiring crosses under paving having a width greater than 25 feet, a 3-inch Schedule 40 PVC sleeve shall be installed at a depth of 36” below the bottom of the paving, as measured from the top of the sleeve. The backfill of the trench shall be a 2 sack cement slurry. The slurry shall extend from the bottom of the trench to within one inch of the bottom of the existing paving. The trench in the existing paving shall be repaired with a like paving material and join the existing paving both horizontally and vertically.

3.5 REMOTE CONTROL WIRING UNDER PAVING

Remote control wire under paving shall be placed in a 3” class 315 PVC sleeve buried at a depth

of 36. Roadways or paths less than 25 feet in width shall have the sleeve jacked under the roadway.

3.6 FITTINGS ON MAINLINES:

All outlets from a mainline shall be accomplished with line sized tees with an outlet of the specified size. No saddle tees shall be permitted.

3.7 INSTALLATION OF VALVE BOXES

Boxes shall be set flush with finish grades, including sloped areas, and all soil within 12 inches of the perimeter of the box shall be compacted by water settlement as indicated in the trench repair section of this specification. Boxes are to be positioned per details.

3.8 LAYOUT OF PIPING

Pipe layout as shown on irrigation plan is schematic, except where pipe location has been dimensioned. Contractor may route piping in the most expedient manner consistent with the requirements set forth herein, including avoidance of tree roots. This project is likely to contain significant tree roots. Care should be taken not to disturb or damage roots of existing trees. Contractor shall adhere to As-Built requirements as shown below.

3.9 PLACEMENT OF IRRIGATION HEADS

Note: Irrigation plans for spray, rotary spray or rotors are designed, as a minimum standard, for head-to-head coverage. Stream bubblers and rotary nozzles may be designed for pattern to pattern coverage. Head locations shall be scaled from center of head symbol directly from the irrigation plan. Accuracy of placement shall be within plus or minus two feet for all rotary heads having a throw of 25 feet or greater; within plus or minus 8 inches for all head types with a throw of under 25 feet. Where heads are located adjacent to paving, and the paving drains back into a planter, the heads shall be placed within three inches of such paving. Water waste is strictly prohibited by California Law (AB 1881). If spacing demands additional or fewer materials, notify City Engineer before commencing work.

3.10 INSTALLATION OF IRRIGATION HEAD / IRRIGATION EMITTER

A. Install all sprinkler heads with spacing and coverage indicated on the drawings. Coverage should be sufficient to irrigate areas intended to receive supplemental irrigation to support plant growth and health.

B. To insure proper coverage spray heads and rotary heads shall be installed on separate control valves.

C. Install heads and or change heads, nozzles, or orifices as may be required to provide or adjust coverage.

D. Branch lines, swing joints or sprinkler risers shall not be sized smaller than the sprinkler heads inlet they serve.

E. Pop-up Head Installation:
   1. Pop-up head shall be installed flush with finished grade and 9 inches from edge of walks, and 12 inches from buildings to parking areas, or whenever sprays are located adjacent to impervious surfaces.
   2. Install pop-up heads on factory assembled triple-swing joints or triple-swing joints assembled with PVC Schedule 80 nipples and Marlex 90 degree elbows.

F. Dripline shall be installed per manufacturer recommendations.

3.11 TRENCHING

A. Check all grades so that work may proceed, keeping materials at specified depth.

B. Do all excavation for installation of work included in contract. Mechanical trenching machines shall be of approved type to cut trenches with straight sides. Trenches shall be only wide enough to lay the pipe and control wires. Perform minor adjustments to avoid existing utilities as directed without additional cost. “Pulling” of pipe and/or control wires will not be permitted.

C. Existing Trees

1. Where it is necessary to excavate adjacent to existing trees, the Contractor shall use all possible care to avoid injury to trees and tree roots.
   a. Excavation in areas where two (2) inch and larger roots occur shall be done by hand.
   b. All roots two (2) inches and larger in diameter, except directly in the path of pipe or conduit, shall be tunneled under and shall be heavily wrapped with burlap to prevent scarring or excessive drying.
   c. Where a ditching machine is run close to trees having roots smaller than two (2) inches in diameter, the wall of the trench adjacent to the tree shall be hand trimmed, making clean cuts through.
   d. Roots one (1) inch and larger in diameter shall be painted with two coats of Tree Seal, or equal.
   e. Trenches adjacent to tree should be closed within twenty-four (24) hours; and where this is not possible, the side of the trench adjacent to the tree shall be kept shaded with burlap or canvas.

D. Contractor is responsible for repairs of all damaged plumbing or electrical during construction digging or trenching.

3.12 ASSEMBLY OF PIPES

A. Metal Pipe

Do not bend or spring pipe, make all offsets or changes in direction with fittings. Cut threads with sharp, clean dies to conform to ASA Specification B2. Assemble pipes free from dirt and scale, ream and deburr. Make up joints by applying oil base compound to male threads only. Remove excessive compound after make-up.

B. PVC Plastic Pipe

1. Handle with care when loading, unloading, transporting and storing material to avoid damage. Store pipe and fittings under cover before using. Transport in vehicle with bed of sufficient length to carry pipe flat and fully supported. Store pipe in same manner. Notify City Representative when each pipe and fittings shipment reaches the site for his or her observation. Rejected materials shall be immediately removed from the site and replaced with new shipment of different batch number.

2. Solvent welding - Use non-synthetic brush to spread primer and solvent using no larger than pint-sized cans. Clean and refill cans each day. Cut pipe square, ream, chamfer outside end at 10 degrees. Clean and dry pipe and fitting socket. Scrub full length of inside socket and pipe end with primer, prime inside socket again. Immediately apply solvent to pipe end and to socket, then again to pipe end. Bottom the pipe in socket and turn 90 degrees. Hold joint together 30 seconds. Wipe off excess solvent. Allow to set 30 minutes before moving. Centerload pipe with small amount of backfill to prevent arching and whipping under pressure, leaving all joints exposed.

3. Threaded connections - Use Teflon tape on plastic threaded joints. Screw hand tight and another half turn by wrench. On PVC to metal pipe, work the metal connection first.

3.13 LAYING OF LINES

A. All lines set in place under paving shall extend 18" minimum beyond edge of paving.

B. Snake PVC plastic pipes side to side in trench bottom keeping 4" horizontal clearance between two pipes in same trench. Do not lay pipe in trench containing water or at less than 32 degrees F. Centerload immediately, leaving joints exposed.

3.14 LAYING OF CONTROL WIRES

Lay wires in common trench with main lines wherever possible. Splicing is allowed with 24" expansion loop only in electrical junction box with bolt down lid. Follow all two-wire controller manufacturer recommendations. All splices shall be waterproof. No trench to be covered before City has inspected wire runs. Any field splices shall be located in separate valve box marked on "As-builts". Field splice boxes shall be of a sufficient size to provide for future maintenance.

3.15 AUTOMATIC CONTROL SYSTEM INSTALLATION

The foundation of the automatic controller shall be per details.

3.16 LOW VOLTAGE WIRE CONNECTIONS

Connectors shall be DBY or DBR as manufactured by 3M Corp., or as recommended by the controller manufacturer. Install all wire connections per controller manufacturer and valve manufacturer recommendations.

3.17 CONTROL WIRE

Mainline control wires shall be taped together at five (5) foot intervals with black electrical tape, then laid parallel to pressure line with 18 inches minimum cover to finish grade.

Control wiring located under paved areas shall be encased in Schedule 40 PVC pipe and shall extend a minimum of 12 inches beyond pavement.

Wires shall be color coded, white for common ground wire, red or black for valve control wires.

Wire splicing shall only be performed in controller cabinet and at remote control valve boxes. Splices shall be made with a mechanical connector equal to "Scotch-lok" and encased in epoxy resin to provide a permanent watertight connection.

Stubbed out control wires shall terminate in yard boxes, and marked “STUB OUT”.

Wire passing under future or existing paving or structures shall be encased in Schedule 40 PVC pipe extending at least 12 inch beyond edges of the paving or structure.

3.18 INSTALLATION OF IRRIGATION CONTROL WIRING

A. Do not tape wire bundles to the mainline piping.

B. The Contractor shall run two extra black control wires from the automatic controller to the farthest valve on the system, or to the farthest valve at each end of the controller area, if the farthest area extends in two directions from the controller.

C. Each exterior controller enclosure shall have a ground rod.

3.19 IRRIGATION SYSTEM FLUSHING AND TESTING

A. The irrigation system shall be flushed in the presence of the Inspector. Flushing shall start with the valve closest to the point of connection and proceed with each consecutive valve toward the valve farthest from the point of connection. Each lateral system shall have each riser capped during the flushing commencing with the riser closest to the valve and proceeding to the farthest riser. After the entire irrigation system has been flushed the system shall be pressure tested in accordance with section 308-5.6 of the SSPWC.

B. The irrigation system mainlines shall be pressure tested following the flushing of the complete system. The mainlines shall be tested for 24 hours at 125 p.s.i. with all control valves in place and closed. During the test, the Contractor shall provide pressure gauges downstream from

the backflow device and upstream from the farthest remote control valve in the system.

3.20 PRESSURE TESTS

Perform all hydrostatic tests in presence of the City Representative after flushing lines. Maintain 125 PSI without any pressure drop on main lines for 2 hours with all air expelled from line and with all valves in place. All leaks shall be corrected in mechanical manner without use of epoxy fillers or other filler compounds. Contractor shall provide all equipment for tests including force pump and pressure gauges.

3.21 BACKFILL

After the work has been installed, flushed, tested, and proven tight in the presence of the City Engineer, backfill with fine materials. Allow no rocks or other objects larger than one inch diameter to fall in the first 6" of cover. Backfill in 4" layers and tamp properly to avoid any voids. Flooding of trenches shall be done only with the approval of the City Engineer. However, all sandy soils, as determined by the City Engineer, shall be flooded during the backfill-compaction operation. Compact backfill over lateral lines to equal density of adjoining undisturbed soils, and compact to 90 percent over main lines. All trenches shall be left flush to the adjoining undisturbed grades. All backfill under surfaces to be paved for vehicular use shall be compacted to 95%. Any work covered prior to observations by the City Engineer shall be uncovered at the expense of the Contractor to allow for such observations if demanded by the City Engineer. Any surplus soil shall be distributed on site or properly disposed of off-site as directed by the City Engineer.

3.22 ADJUSTING SYSTEM

Adjust entire system prior to coverage test, and again at conclusion of maintenance period.

A. Set all shut-off valves in the system to full open position.

B. Adjust all stationary heads to uniform coverage on each system using adjusting screws in each sprinkler head and by control of the throttle device on each remote control valve.

C. Adjust arcs of all heads to prevent overspray on areas to be kept dry. Replace nozzles in heads to different arcs, i.e., 180 degrees nozzle to 120 degree nozzle, etc. to provide proper and more adequate coverage. These changes or adjustments shall be made without additional cost.

E. Install check valves to prevent drainage from any sprinkler head.

3.23 COVERAGE TEST

When installation of the sprinkler system is completed, perform a coverage test in the presence of the City Engineer and Landscape Architect to determine that coverage for planting areas is complete and adequate. Where inadequate coverage occurs, or where site conditions require, the Contractor shall provide necessary material and perform work to correct all inadequacies without additional cost. These tests and corrections shall be accomplished before any ground cover or shrubs are planted.

3.24 RECORD DRAWINGS (AS-BUILTS) AND CONTROLLER CHARTS

A. As built plans shall be maintained daily throughout the construction period and turned over to the City Engineer at the Operational Final Inspection, as indicated in the General section of this Notice to Contractors in the Record Drawings Submittal section.

B. The Contractor shall provide two copies of a controller chart showing the irrigation system installed. The chart shall be done on a half size photographic reproduction of the irrigation plan and shall reflect the as-built data. Each station shall be shown in a different color and control wire locations shall be indicated. The complete plan shall be laminated on each side with a 20 mil acrylic plastic sheet. A 3/4" brass grommet shall be placed in each top corner. The Contractor shall obtain approval of the controller chart from the Project Manager, before

proceeding with the plastic lamination.

3.25 SITE CLEANING

Clean and dispose, legally, all debris from site. Remove all storage rooms and all other constructions and make site ready for planting work to follow. Debris not cleared for landscape work may be backcharged.

3.26 WARRANTY FOR IRRIGATION SYSTEM WORK

The entire sprinkler irrigation system shall be warranted to be free from defects in materials and workmanship, and installed in accordance with this Notice to Contractors and the SSPWC. The Contractor shall be required to repair or replace any defects in material or workmanship which may develop within one (1) calendar year from the date of acceptance, ordinary wear and tear and unusual abuse or neglect excepted. Further, the Contractor shall be required to make any necessary repairs within 24 hours of notification at no cost to the City. If the Contractor or his agent fail to make such repairs within the stipulated time, the Owner shall make such repairs or have repairs made by a third party and bill the Contractor for all expenses that accrue from making such repairs.

3.27 GUARANTEE AGAINST SETTLEMENT

If, within one (1) calendar year from the date of acceptance, settlement occurs along mainlines, lateral lines, at valve boxes, or other irrigation related appurtenances, and adjustments in pipes valves and sprinkler heads are required to bring the system, finish grade, or paving to the level of the permanent grades, the Contractor shall make all adjustments without additional cost to the City, including complete restoration of any planting, paving, or other improvements damaged as a result of settlement.

3.28 FIRE LINE/IRRIGATION MAINLINE INSTALLATION, (RESTRAINED PIPE JOINTS), C900 PVC

A. Fire line/Mainline piping 4" to 10" diameter, if indicated on the plan, shall be Class 150, DR 18, C-900 PVC with Pacific Western 'Twin Seal' joints, or equal, provide 36" of cover over the top of pipe. All fittings shall be ductile iron, AWWA C153, compact configuration, with mechanical joints. All ductile iron compact configuration fittings shall be of U.S. manufacture All fitting to pipe joints shall be restrained with an EBAA 2000 series 'Megalug' retainer gland. Retainer gland bolts shall be tightened as specified in the manufacturer's instructions. All bolts shall be tightened using a torque wrench only. Tighten each 'Megalug' wedge nut in an alternate sequence with a torque wrench. The maximum torque on the 'Megalug' wedge nuts shall be 30 ft./lbs. The Contractor shall verify the torque of the bolts with a torque wrench to the BCA Inspector and shall have a torque wrench available on site until job acceptance.

C. Two joints, each side of the fittings or valves, shall be installed with EBAA 1600 series ductile iron bell retainers. The maximum torque of the side bolts of the bell retainer shall be 90 ft./lbs. There shall be a minimum of 25 feet of pipe between the fitting and the bell retainer farthest from the fitting.

C. The 'Megalug' restrainer gland and the bell restrainer work as a unit to fully restrain the pipe. There is no need for thrust blocks on the system.

3.29 BACKFLOW DEVICE INSTALLATION AND CERTIFICATION

The Contractor shall obtain certification of the backflow device and submit two copies of the certification to the City Engineer at the Operational Final. The backflow certification shall be made on the County Health Department standard form and filed with the County Health Department, Cross Connection Section, Room 150, 2525 Corporate Place, Monterey Park, CA, 91754. The contractor shall paint all backflow prevention devices above ground with two coats of forest green enamel. Mask all identification tags prior to painting, (308-5.3). After certification remove all test cocks, replace with threaded brass plugs, and deliver test cocks to the City Engineer.

3.30 RECLAIMED WATER IRRIGATION PIPING AND PROCEDURES

Not applicable to this project.

3.31 DOMESTIC PIPING IN CONJUNCTION WITH RECLAIMED WATER

Not applicable to this project.

3.32 RECLAIMED WATER PIPELINE INSTALLATION – GENERAL

Not applicable to this project.

3.33 OBSERVATIONS

Observations will be performed by representatives of the City (including the Landscape Architect) at the following times and at random visits when the observer may be on the site. When observations have been conducted, show evidence of when and by whom these observations were made.

A. Prework conference. To be conducted prior to any irrigation work under this contract.

B. Sprinkler head staking.

C. Observation of flushing.

D. Observation of pressure tests.

E. Observation of coverage performance.

F. Final observations of the completed installation.

G. Contractor shall not cover any work prior to observation by the City Representative.

H. All observances shall be requested at least 48 hours in advance. All work shall meet the City Engineer's approval, or be rectified at no additional cost to the City. Contractor shall be financially responsible for all members of the team of observers for unprepared observation appointments.

3.34 ITEMS FURNISHED

At time of final acceptance, Contractor shall deliver to the City:

A. One control valve key, 30" long, for every six remote control valves installed.

B. One coupler key with hose bibb attached for every six quick coupler valves installed.

C. One loose key for every six quick coupler valves installed.

D. Two special wrenches suitable for operating each type of shut-off valve installed.

E. Two tools for disassembly and assembly, or adjustment, of each type equipment used in this installation requiring such special tools.

F. Two valve box keys for every 12 lock lid valve boxes used in this installation.

G. Operating instructions and parts lists, as printed by each manufacturer of each type of equipment installed. Refer to "Materials" section of the specifications and legend on drawings.

H. List of equipment with names and addresses of local manufacturer representatives.

I. "As-built" drawings and controller charts.

J. Provide 10 extra sprinkler heads & emitter devices / nozzles per each indicated in the irrigation schedule on the drawings.

3.35 FINAL ACCEPTANCE

Prior to walking irrigation system with the City Representative, the Contractor shall pre-walk irrigation system with their own crew to ensure compliance with plans and specifications.

The Contractor shall operate each system in its entirety for the City's Representative at the time of final observation. Any items deemed not acceptable by the City Representative shall be reworked to the complete satisfaction of the Representative. All equipment shall be checked and adjusted in height, location, performance and appearance at time of final acceptance. All damaged portions shall be replaced with new materials of like-kind.

The Contractor shall show evidence to the City Representative that the City has received all accessories, charts, record drawings, and equipment as required before final site observation can occur.

END OF SECTION

SECTION 32 90 00
PLANTING

PART 1 – GENERAL

1.1 SCOPE

A. PLANTING WORK includes, but not limited to, the following:

1. Preparing existing topsoil/site soil
2. Soil preparation and fine grading
3. Maintenance of planting areas for 90 days

B. RELATED WORK specified elsewhere:

1. Landscape Grading
2. Selective Demolition
3. Landscape Irrigation
4. Planting Notes on Sheets
5. Appendix, Protection of Trees

C. VERIFICATION OF DIMENSIONS AND QUANTITIES

1. All scaled dimensions are approximate. Before proceeding with any work, the contractor shall carefully check and verify all dimensions and quantities and shall immediately inform the Landscape Architect of any discrepancies between the drawings and/or the specifications and the actual conditions. No work shall be done in any area where there is such discrepancy until approval for same has been given by the Landscape Architect or the City Engineer.

D. SUBMITTALS

1. Comply with provisions of General Specifications.
2. Submit complete lists of landscape materials and equipment, including manufacturers name and address, specific trade names, catalog numbers complete with illustrations and descriptive literature and clearly mark or underline proposed items; list source of landscape mulch.
3. Submit complete list of plants including nursery source, plant botanical name, quantity, container size and photograph of plant to be supplied. The list shall include all unavailable plants and which nurseries were contacted during contractor's search.
4. Shop Drawings: Required for any landscape structure.

E. CERTIFICATIONS

1. Certified Label for all plant material marked with a * on the planting plan list of plants. Each plant supplied to the project, and indicated by the * mark must be tagged for accuracy of identification and verification of the correct variety by having a Verified Tag or label affixed. This label must display the variety with the botanical name of the correct plant printed on the same label. Any plant varieties marked on the planting plan with the above instruction that does not arrive on-site with the required label will be rejected at the contractor's expense, and cannot be installed on the project.
2. In addition to other required certification, furnish a certificate with each delivery of bulk material, including mulch, and mycorrhizal inoculant, stating its source, quantity, type of material furnished and that such item or material conforms to the requirements of this section.

F. MULCH

1. Shredded fir bark. Submit mulch sample for approval prior to use.
2. Granite Cobble – size and conditions specified on plan and details.

G. OBSERVATION

1. All observation herein specified shall be made by the City Engineer or Landscape Architect. The contractor shall request observation at least 48 hours in advance of the time observation is required. Observation will be required on the following parts of the work:

   a) During preliminary grading, soil preparation, and initial weeding.
   b) When finish grading has been completed, and prior to the planting of ground cover or seeded turf.
   c) When planting and all other indicated or specified work has been completed but prior to maintenance period.
   d) Final observation at completion of maintenance period.

2. The contractor shall be on the project site at the time of each observation.

H. AGRONOMICAL SOILS REPORT

1. Contractor to provide and review Agronomical Soils Report and provide amendments to the soil in proposed planting areas per the recommendations of the soils report. See planting notes on sheets.

I. MAINTENANCE

1. Contractor shall continuously maintain all areas included in the Contract during progress of the work, the 90-day maintenance period, and until final acceptance of the work.

2. If plantings are not acceptable at the end of the maintenance period for the entire work, due to defective maintenance, the maintenance shall be continued by the Contractor until all work meets the Specifications and can be approved.

3. Maintenance shall include continuous operations of watering, weeding, mowing, rolling, trimming, edging, cultivating, fertilizing, spraying, insect and pest control, seeding, and/or other operations necessary to assure good normal growth.

4. All planted areas shall be kept free of debris and shall be weeded at not more than 10-day intervals.

5. During the installation period and maintenance, the Contractor shall be responsible for maintaining adequate protection for all areas. Any damaged planting shall be repaired at the Contractor's expense.

6. At the termination of the maintenance period, all plant materials shall be live, healthy, undamaged, and free of infestations. All lawn areas shall be completely covered at the time of final acceptance. Inferior plantings shall be replaced and brought to a satisfactory condition before final acceptance of the work will be made.

J. GUARANTEE

1. The Contractor shall warrant all trees 15 gallon sized and larger for one year starting with the end of the establishment period. This warranty does not include items damaged due to the City’s neglect and/or to acts of God.

2. The Contractor, within 15 days of written notification by the City Engineer, shall remove and replace all guaranteed plant material that for any reason fails to meet the requirements of the guarantee. Replacement material and plantings shall be to the same specifications as required for the original planting and all replacements shall be guaranteed as specified for the original guaranteed materials.

PART 2 – PRODUCTS

2.1 MATERIALS

A. AMMONIUM PHOSPHATE

1. Shall be a standard agricultural grade of ammonium phosphate having guaranteed analysis of 16-20-0.

B. ESTABLISH - GENERAL PURPOSE FERTILIZER

1. Shall have a minimum analysis of 1-1.3-5,(N-P-K), derived from rock phosphate, peat moss, chicken manure, sand, sulfate of potash, gypsum, and EDDHA chelate. As manufactured by Earth Works Soil Amendment, Inc., (310) 322-9702, or an approved equal.

C. FEATHER MEAL

1. Shall have a minimum analysis of 12-0-0,(N-P-K), derived from feathermeal. As manufactured by Earth Works Inc., (310) 322-9702, or an approved equal.

D. FERTILIZER TABLETS

1. Shall be fertilizer tablets shall be Agriform 21 gram, 20-10-5, available from Western Farm Service, (805) 487-4961 or an approved equal.

E. GYPSUM

1. Shall be agricultural grade.

F. MYCORRHIZAL INOCULUM

1. Tea bags or drench, per manufacturer's specifications per plant size. Tri-C Products 1-800-927-3311 or equal

G. HYDROSEED MULCH FIBER

1. Shall consist of virgin wood fiber of Aspen or Alder. It shall not contain any waste paper, newsprint or straw material. The mulch shall contain a green dye to facilitate application. Fiber shall be as manufactured by Conwed Co., (Green Tag), Silva-Fiber by Weyerhauser Co., or an approved equal, (212-1.2 (e)).

H. HYDROSEED STABILIZER

1. Shall consist of natural muciloid materials supplied by Ecology Controls M-binder, (805) 684-0436, no equal.

I. HYDROBLEND SOIL ACTIVATOR

1. Shall have a minimum analysis of 1.2-1.4-5, (N-P-K), derived from rock phosphate, peat moss, chicken manure, sulfate of potash, gypsum. As manufactured by Earth Works Inc., (310) 322-9702, or an approved equal.

J. MULCH

1. Shall be shredded fir bark mulch, free of all foreign matter including weed and tree seeds. Submit sample of mulch and source to Landscape Architect / City Engineer for approval prior to application. Available from American Soil in Simi Valley (805) 578-0052 or an approved equal.

K. NITROFORM UREAFORM

1. Shall be a standard commercial grade of nitroform having a guaranteed analysis of 38-0-0.

L. ORGANIC AMENDMENT

1. Shall be organic soil amendment, see soils report.

M. OVERSEED TOPDRESSING, EARTH WORKS ORGANIC TOPDRESSING

1. Shall be derived from composted wood products, peat moss, chicken manure and a wetting agent. As manufactured by Earth Works Inc., (310) 322-9702, or an approved equal.

N. GRANITE COBBLE TOPDRESSING (MULCH)

1. Shall be locally sourced granite cobble per the sizes indicated on plans and details or an approved equal.

O. POTASSIUM SULFATE

1. Shall be a standard agricultural grade of potassium sulfate having guaranteed analysis of 0-0-50.

P. PRE-EMERGENT HERBICIDE

1. Shall be Balan Granular, by Elanco, or an approved equal. All pre-emergent herbicides, when required, shall be specified and applied by a licensed Pest Control Advisor.

Q. ROUNDUP

1. Shall be a water-soluble herbicide for non-selective control of weeds containing 480 grams per liter of the active ingredient Isopropylamine salt of N-(phosphonomethyl) Glycine (Glyphosate) per U.S. gallon, as manufactured by Monsanto Chemical Company, or approved equal.

R. SOILS

1. Designated as imported soil for pit planting only as specified herein. The soil test will determine the suitability of soil before installation. Transport soil from the source to its final position unless stockpiling is specified.

2. Imported Soil for limited pit planting only:

   a) From a source outside the Project site and in compliance with this section.

   b) Architect may make such inspections and perform such tests as deemed necessary to determine the material meets all requirements.

   c) At least 30 days before scheduled installation, submit the proposed source of soil and a Sample to the Architect. Submit a written request for review, accompanied by a written report of a soils testing laboratory registered by the State of California for agricultural soil evaluation which states that the proposed source complies with these Specifications.

d) Comply with all recommendations of the soils testing laboratory and provide any soil amendments necessary to achieve proper nutrient levels to support healthy plant growth.

e) Imported topsoil shall be of a uniform composition and structure, fertile and friable sandy loam garden soil, and be free of roots, clods and stones larger than 1 inch in greatest dimension, pockets of coarse sand, noxious weeds, sticks, brush and other litter and not be infested with nematodes or other undesirable insects and plant disease organisms. Imported topsoil shall meet the following additional requirements:

(1) Gradation Limits: Sand – 50-80%, clay – 20% maximum, and silt – 30% maximum. The sand, clay and silt gradation limits shall be as defined in ASTM D 422.

(2) Agricultural Suitability and Fertility: The soil shall be fertile and friable garden soil suitable for sustaining and promoting the growth of the specified plants.

3. Light-Weight Soil for raised storm water planters:

a) Shall be a custom mix of coco chips, coco coir, rice hulls, and volcanic cinder (1/16" – 3/16")

b) Shall have a percolation rate of .5" per hour or greater.

c) Available from Cal Blend Soils, (626) 359-1083.

S. TURFGRASS SEED

1. Seed for seeding and re-seeding turf areas shall be Ballfield Mix 3A by Agronoc-Tec Seed Co., (800) 543-4109, or approved equal.

T. WATER HOLDING POLYMER

1. Shall be "Broadleaf P-4".

U. PLANTS

1. All plants are to be nursery grown under similar climactic conditions as the site. Plants shall conform to the American Standard for Nursery Stock, ANSI Z60.1-2004 as published by the American Nursery & Landscape Association, unless specified otherwise in the plans.

2. Plant Acceptance:

a) Sample trees, shrubs and groundcovers, as specified in the plans, shall be approved for use and shall be made available to the Landscape Architect for approval, prior to ordering and delivering. Name of the grower, guarantee of availability of quantities and conformance to the specifications must be furnished in writing to the Landscape Architect prior to ordering of the approved plant. Digital color photographs may be used for approval. All plant material must be tagged with botanic name and hybrid variety.

b) Upon approval of the plant material, ordering may be placed.

c) Plants shall be transported so that they are not exposed to wind, extremes of temperature, or conditions, which would cause them to dry or sunburn.

d) **Plants shall be inspected at time of arrival** to insure they are healthy and in good condition. Any plant found not in conformance with the specifications, shall be rejected. A copy of the shipping bill shall be provided to the inspector at the

time of delivery, to insure the proper quantities of plants have been delivered (see Certification requirements above).

B. DECORATIVE GRAVELS

1. Shall be a max. of ¾" crushed granite.
2. Contractor to provide sample for approval.

PART 3 – EXECUTION

3.1 METHODS

A. TOPSOIL PREPARATION – GENERAL

1. The topsoil shall be the existing class "C" on-site topsoil. Remove all stones over 1 inch in greatest dimension, to a depth of 6 inches below finish grade, (308-2.3.1).

2. Prior to planting, the top two (2) inches of all areas (including slopes) shall be free of weeds, stones, and other deleterious matter one (1) inch in diameter and larger.

B. TOPSOIL PREPARATION

1. If not otherwise specified, all turf areas shall receive the following soil preparation. Uniformly broadcast the following materials per 1,000 square feet:

a) 20 pounds of 12-12-12 quick release commercial fertilizer. These quantities are for bid purposes only. Refer to soils report for final quantities.
b) Gypsum – 15 pounds
c) Organic amendment –3 cubic yards in planting areas, sufficient amount to provide soil organic matter in the range of 4% to 7% on a dry weight basis.

2. The soil preparation materials shall be cultivated into the soil to a depth of 6 inches minimum and thoroughly watered, (308-2.3.1).

C. FINISH GRADING (for Turf Areas)

1. Finish grading of turf areas shall take place after the soil has dried out to a workable condition following the soil preparation operations. The soil shall be remodeled and smoothed to the required grades and contours, then rolled in two directions at right angles with a water ballast roller weighing 200 to 300 pounds. Any resulting irregularities in the grade after the initial rolling shall be re-raked, cut or filled, then re-rolled until the grade is free from irregularities. No heavy objects shall be taken over the areas at any time. The final finish grade shall be uniform, without abrupt changes in grade, within one-tenth of a foot of the grades shown on the plan, and approved by the City Engineer prior to seeding, (308-2.4).

D. WEED ABATEMENT ("GROW AND KILL")

1. Weed abatement shall apply to all turf, hydroseed, shrub, tree, and all areas to be planted as shown on plans. The abatement operation shall be commenced only after removals, grading, hardscape construction, installation of irrigation system, soil preparation, and fine grading of turf and planting areas have been completed.

2. NOTE: It is required that herbicides be applied by a licensed PEST CONTROL APPLICATOR.

E. CONTRACTOR RESPONSIBILITY DURING WEED ABATEMENT OPERATION AND APPLICATION PRECAUTIONS

1. The Contractor is responsible or any and all damage done to plant materials outside of the treatment area. Contractor shall replace, in kind and size, any plant material damaged or killed through the application of herbicide.

2. The following precautions shall be observed in handling and applying herbicide:

   a) Before applying, Contractor shall read and understand all instructions provided by the manufacturer.
   b) Product shall not be used when winds are gusty or in excess of 3 miles per hour, or when any other conditions exist which would result in drift.
   c) Avoid combinations of pressure and nozzle type or adjustment that result in mist.
   d) Do not apply during rain, or if rain is forecast within twelve hours. If rain occurs within twelve hour period, material must be reapplied after plant growth has dried out.
   e) Contractor shall observe extreme care not to allow spray to contact desirable plant material. Use cardboard, plywood, or other appropriate material to shield plant materials outside of the treatment area from overspray.
   f) Do not apply to bare ground.
   g) Do not add any other product to herbicide mix, including spreader-stickers or surfactants.

F. WEED ABATEMENT: GROW AND KILL METHOD

1. Contractor shall follow the “grow and kill” steps set forth below:

   Step 1. Clear the site of all dead or living vegetative growth by hand or mechanical means.
   Step 2. Thoroughly water all turf and planting areas daily to keep soil evenly moist for a period of at least two weeks.
   Step 3. At the conclusion of the growth period, treat all plants within the treatment area with Roundup at an application rate of five (5) quarts of Roundup mixed in 50 gallons of clean water per acre applied by spraying. Thoroughly moisten all plant material with herbicide.
   Step 5. Do not water or otherwise disturb treated areas for a period of two (2) weeks.
   Step 6. After two-week kill period, remove all dead plant growth. If any living plants are observed, entire plant, including roots, shall be removed by hand. Minimize physical disturbance of the soil.

G. WEED SUPPRESSION (NON-HERBICIDE WEED REMOVAL)

1. Weed suppression, shall apply to all turf and planting areas. The suppression operation shall be commenced only after removals, grading, hardscape construction, installation of irrigation system, soil preparation, and fine grading of turf and planting areas have been completed. Contractor shall thoroughly water all turf and planting areas for a period of two weeks minimum prior to commencing removal. Contractor shall clear site of all dead vegetation and living weeds by hand or mechanical means. All removed vegetation shall be properly disposed of off-site.

H. TREE AND SHRUB PLANTING

1. Plant pits for all 1 gallon, 5 gallon, 15 gallon, and all boxed size trees, shall be twice the width and equal to the depth of the container rootball. Note that this requirement differs from the SSPWC (308-4.5).

2. Unless otherwise specified, the backfill mix for all plants shall be 60% percent on site soil and 40% percent Type I organic soil amendment and 1 lb. of "Establish," general purpose fertilizer per gallon of container, or 1 lb. per each 4" of box size. “Broadleaf P-4” water holding poylmer shall also be added to the backfill mix at the rate of 1 oz. per foot of rootball diameter.

3. Each plant pit shall also receive "Agriform" slow release fertilizer tablets, 21 gram, 20-10-5, as shown in the relevant planting details, and as follows:

   1 gallon – 1 tablet
   5 gallon – 3 tablets
   15 gallon - 5 tablets
   One (1) tablet per 4” of box size

4. Space tablets evenly around the perimeter of the rootball, approximately 3 inches below finish surface. After shrub or tree has been planted, water by hand to hydrate polymer.

5. Remove all watering basins around trees planted in lawn areas at the end of the maintenance period. All trees planted in lawn areas shall have a 36 inch diameter unplanted area around each tree.

6. Contractor shall apply an 8-8-4 commercial slow release fertilizer to all planting areas at a rate of 20 pounds per 100 square feet upon completion of the ground cover planting and at thirty (30) day intervals there after until the end of the plant establishment period. Thoroughly water all planting areas following the application of the fertilizer. All fertilizer application shall be performed under inspection of the project manager.

I. METHOD “A” TURF PLANTING – REPAIR, SEEDING

1. Irrigation trenches shall be fully compacted and the grade brought flush with the adjacent undisturbed finish grade. Irrigation trench areas and areas where equipment has damaged the existing turf shall be seeded per this section.

2. Sow seed at a rate of three (3) pounds of GN1 Bermuda per 1,000 sq. ft. Mulch all seed with 1/4"(or 3/4 cubic yard per 1,000 sq. ft.) of Bio-organic Finale.

J. METHOD “B” TURF PLANTING, HYDROSEEDING

1. The lawn seed mix for turf planting shall contain the following materials at the rates specified:

   Mulch Fiber – 1,500 lbs./acre (.0345 lbs./sq.ft.)
   Stabilizer – 120 lbs./acre (.0028 lbs./sq.ft.)
   Fertilizer – Hydroblend, at 3,000 lbs./acre (.0688 lbs./sq.ft.)
   Seed by Weight – 3 lbs. GN1 Bermuda grass, (coated) per 1,000 sq. ft.

2. The Contractor shall supply a delivery receipt to the BCA Inspector certifying conformance with the specified hydroseed mix and indicating that the slurry has not been mixed for longer than two hours. Slurry which has been mixed longer than two hours shall be recharged with 50 percent more of the specified seed mix, at the Contractor's expense, (308-4.8.2(b)). Delivery tickets shall be forwarded to the City Engineer.

K. MULCHING

1. All planting areas except lawn shall receive a minimum three (3) inch deep layer of mulch per the Planting Details and this specification’s materials list. Mulch shall be

spread evenly throughout planting beds and tree watering basins. Do not bury ground cover. Cobble mulch to be installed per plan and details.

L. MAINTENANCE AND PLANT ESTABLISHMENT

1. The Contractor shall be responsible for maintenance within the area of work throughout the period of construction and the plant establishment period. The maintenance shall include continuous operations of picking up trash and emptying trash cans daily, watering, the removal of all weeds in planting areas and all broad leaf weeds in lawn areas, mowing, rolling, trimming, edging, cultivation, fertilization, spraying, control of pests, insects and rodents, reseeding, plant replacement (irrespective of cause), or any other operations necessary to assure normal plant growth and the collection and removal of all trash daily. Any malfunctions of, or damage to, the irrigation system caused by the Contractor in the prosecution of his work shall be repaired within 24 hours.

2. The plant establishment period shall be for a period of 90 days unless extended as described in this section. The plant establishment period shall be started when all planting and related work has been completed, in accordance with the contract documents. The beginning of the plant establishment period shall be determined by an on-site review by the City Engineer. Trees and shrubs shall be healthy and vigorous at the completion of the maintenance period. Broken or vandalized tree stakes shall be repaired to a condition as initially installed within seven (7) days of damage.

3. All turf areas shall have 95 percent coverage with bare areas not exceeding three square inches. All turf shall be of the grass specified and be free from all broad leaf weeds. The turf shall not be allowed to grow higher than three (3) inches and shall be mowed to a one and one half (1 ½) inch height. The turf shall be mowed at least twice during the plant establishment period.

4. The entire area of work shall be kept free of weeds, trash or other debris during the maintenance period. The Contractor shall maintain the area of work at maximum seven (7) day intervals and perform any needed mowing of existing lawns within the area of work when the grass reaches a four (4) inch height.

5. Five weeks after lawn seeding the Contractor shall apply a slow release 38-0-0 granular fertilizer at a rate of 15 pounds per 1000 sq. ft. to all lawn areas. The fertilizer shall be applied in the presence of the BCA Inspector.

6. The Contractor shall immediately replace any and all plant materials and/or grass which, for any reason dies or is damaged while under the Contractors care. Replacement shall be made with seed and/or plants as indicated or specified for the original planting.

7. The designated plant establishment period is part of the total contract time. The plant establishment period will be extended at fourteen (14) day intervals if, at the end of the plant establishment period, the planting, irrigation and other improvements do not reflect the intent of the plans and Notice to Contractors. All extensions of the plant establishment period shall be subject to the assessment of liquidated damages, (308-6).

END OF SECTION

SECTION 32 91 19
LANDSCAPE GRADING

PART 1: GENERAL

1.1 SUMMARY

A. Section includes final grade topsoil for finish landscaping.

PART 2: PRODUCTS

2.1 MATERIAL

A. Existing site soil preparation.

2.2 IMPORTED TOP SOIL

A. Imported top soils shall be Class A soil, obtained from a source designated by the Contractor and approved by the City Engineer or the Landscape Architect.

B. Contractor shall guarantee the quality of the top soil with an approved agricultural suitability evaluation report. Submit the soils report to the City Engineer for approval 30-days prior to any soil placement.

PART 3: EXECUTION

3.1 EXAMINATION

A. Administrative Requirements: Coordination and project conditions.

B. Verify trench backfilling has been inspected.

3.2 SUBSTRATE PREPARATION

A. In scheduled turf areas remove debris, roots, branches, stones, in excess of ½ inch in size.

B. In all other scheduled planting areas remove debris, roots, stones in excess of 1 inch in size.

C. Loosen and scarify surface to depth of 24 inches where planting is scheduled. Loosen and scarify in areas where equipment used for hauling and spreading soil has compacted subsoil to a depth of 24 inches.

3.3 PLACING TOPSOIL/SOIL AMENDMENTS

A. Grade soil/soil amendments in areas where seeding, and planting, are required to thickness as scheduled to a nominal depth as per Landscape Planting Plans. Place soil/soil amendments during dry weather.

B. Fine grade existing topsoil/soil amendments to eliminate rough or low areas. Maintain profiles and contour of subgrade.

C. Where trees have been removed, fill area and compact to meet final grades.

D. Remove roots, weeds, rocks, and foreign material while spreading.

E. Manually spread topsoil close to plant material.

F. Lightly compact and roll placed topsoil.

G. Remove surplus soil from site.

H. Leave stockpile area and site clean and raked, ready to receive landscaping.

3.4 PROTECTION OF INSTALLED WORK

A. Protect landscaping and other features remaining as final Work.

B. Protect existing structures, fences, sidewalks, utilities, paving and curbs.

C. Prohibit construction traffic over topsoil.

- END OF SECTION -

DIVISION 33

UTILITIES

SECTION 33 1100
SITE WATER DISTRIBUTION UTILITIES

PART 1 - GENERAL

1.1. SUMMARY

A. Section Includes:

1. Site water distribution systems located outside the building perimeter, extending to an existing water line or meter.

B. Related Requirements:

1. Division 01 - General Requirements.

2. Division 22 – Plumbing.

3. Section 31 2323 - Excavation and Fill for Utilities.

4. Section 32 0117 - Pavement Repair.

5. Section 32 1313 - Site Concrete Work.

6. Section 33 3000 - Site Sanitary Sewer Utilities.

1.2. SUBMITTALS

A. Shop Drawings: Submit site plan indicating locations of lines, valves, and related appurtenances.

B. Product Data: Manufacturer’s catalog data for materials. Include technical data for accessories, gaskets, joints and couplings.

C. Certificates: Certificates attesting that tests set forth in referenced publications have been performed, and the performance requirements have been satisfied.

1.3. QUALITY ASSURANCE

A. Comply with the following as a minimum requirement:

1. ANSI:

a. ANSI B16.18 Cast Copper Alloy Solder Joint Pressure Fittings.

b. ANSI B18.5.2.1M Metric Round Head Short Square Neck Bolts.

2. ASME:

a. ASME B16.3 Malleable Iron Threaded Fittings.

b. ASME B16.4 Grey Iron Threaded Fittings.

c. ASME B16.22 Wrought Copper and Copper Alloy Solder Joint Pressure Fittings.

d. ASME B16.26 Cast Copper Alloy Fitting for Flared Copper Tubes.

e. ASME B18.2.2 Nuts for General Applications (Inches Series).

f. ASME B18.5.2M Metric Round Head Square Neck Bolts.

3. ASTM:

a. ASTM A47 Standard Specification for Ferritic Malleable Iron Castings.

b. ASTM A48 Standard Specification for Gray Iron Castings.

c. ASTM A53 Standard Specification for Pipe, Steel, Black and Hit-Dipped, Zinc-Coated Welded and Seamless.

d. ASTM A307 Standard Specification for Carbon Steel bolts and Studs, 60,000 psi Tensile Strength.

e. ASTM A536 Standard Specification for Ductile Iron Castings.

f. ASTM A563 Standard Specification for Carbon and Alloy Steel Nuts.

g. ASTM B61 Standard Specification for Steam or Valve Bronze Castings.

h. ASTM B62 Standard Specification for Composition Bronze or Ounce Metal Castings.

i. ASTM B88 Standard Specification for Seamless Copper Water Tube.

j. ASTM C94 Standard Specification for Ready-Mixed Concrete.

k. ASTM D1527 Standard Specification for Acrylonitrile-Butadiene-Styrene (ABS) Plastic Pipe, Schedules 40 and 80.

l. ASTM D1785 Standard Specification for Poly Vinyl Chloride (PVC) Plastic Pipe, Schedules 40, 80 and 120.

m. ASTM D2235 Standard Specification for Solvent Cement for ABS Plastic Pipe, and Fittings.

n. ASTM D2241 Standard Specification for PVC Plastic Pipe Fittings, Schedule 40.

o. ASTM D2282 Standard Specification for ABS Plastic Pipe.

p. ASTM D2466 Standard Specification for PVC Plastic Pipe Fittings, Schedule 80.

q. ASTM D2468 Standard Specification for ABS Plastic Pipe Fittings, Schedule 40.

r. ASTM D2564 Standard Specification for PVC Plastic Piping Systems.

s. ASTM D2774 Standard Practice for Underground Installation of Thermoplastic Pressure Piping.

t. ASTM D2855 Standard Test Method for Making Solvent-Cemented Joints with PVC Pipe and Fittings.

u. ASTM D3139 Standard Specification for Joints Pressure Pipes Using Flexible Elastomeric Seals.

v. ASTM F402 Standard Practice for Safe Handling of Solvent Cements, Primer and Cleaners Used for Joining Thermoplastic Pipes and Fittings.

w. ASTM F477 Standard Specification for Elastomeric Seals for Joining Plastic Pipes.

4. American Water Works Association (AWWA) Standards:

a. AWWA C104/A21.4 Cement-Mortar Lining For Ductile-Iron Pipe and Fittings For Water.

b. AWWA C110/A21.10 Ductile-Iron and Gray-Iron Fittings, 3 inches through 48 inches, for Water and Other Liquids.

c. AWWA C111/A21.11 Rubber-Gasket Joints for Ductile-Iron pressure Pipe and Fittings.

d. AWWA C153/A21.53 Ductile-Iron Compact Fittings, 3 inches through 16 inches, for Water and Other Liquids.

e. AWWA C500 Metal Seated Gate Valves for Water and Sewage Systems.

f. AWWA C503 Wet- Barrel Fire Hydrants.

g. AWWA C508 Swing-Check Valves for Waterworks Service, 2 inches through 24 inches NPS.

h. AWWA C509 Resilient Seated Gate Valves for Water and Sewerage Systems.

i. AWWA C511 Reduced-Pressure Principal Backflow-Prevention Assembly.

j. AWWA C600 Installation of Ductile-Iron Water Mains and Their Appurtenances.

k. AWWA C651 Disinfecting Water Mains.

l. AWWA C800 Underground Service Line valves and Fittings.

m. AWWA C900 PVC Pressure Pipe, 4 inches through 12 inches, for Water Distribution.

n. AWWA M23 PVC Pipe - Design and Installation.

5. Manufacturers Standardization Society (MSS) of the Valve and Fittings Industry:

a. MSS SP-80 Bronze Gate, Globe, Angle and Check Valves.

6. Uni-Bell PVC Pipe Association (UBPPA):

a. UBPPA UNI-B-3 Installation of PVC Pressure Pipe.

b. UBPPA UNI-B-8 Direct Tapping of PVC Pressure Water Pipe.

c. UBPPA UNI-B-13 Standard Performance Specification on joined restrained devices for use with Poly Vinyl Chloride (PVC) Pipe.

7. Underwriters Laboratories Inc. (UL):

a. UL 246 Hydrants for Fire-Protection Service.

b. UL 262 Gate Valves for Fire-Protection Service.

c. UL 312 Check Valves for Fire-Protection Service.

d. UL 789 Indicator Posts for Fire-Protection Service.

B. Provide valves from the same manufacturer.

C. No pipe, pipe fitting, or any other fitting or fixture intended to convey or dispose water for human consumption, for drinking or cooking, is allowed in the domestic plumbing system if it does not meet the low lead definition of Health and Safety Code 116875. Weighted average lead content of the wetted surface area of pipes, fittings and fixtures may not exceed 0.25 percent.

1.4. PRODUCT HANDLING

A. Store items above ground on platforms, skids, or other required supports.

B. Protect materials from direct sunlight.

C. Protect coating and linings on piping, fittings, and accessories from damage. Repair and/or replace damaged coatings or linings.

PART 2 - PRODUCTS

2.1. MATERIALS

A. Pipe:

1. Pipe sizes up to 2.5 inches shall be copper water tubing, Type L hard, ANSI H23.1, ASTM B88, IAPMO IS. Muller Brass, Cambridge-Lee Halstead, or equal.

2. If soil report indicates corrosive condition, an approved protective wrap shall be used to completely isolate and protect underground copper tubing, and extend past the surface a minimum 12 inches. The excess wrapping shall be trimmed down and taped to copper tubing with 10 mill PVC pipe tape at grade level of concrete or asphalt.

3. Underground pipe sizes 3 inches and larger shall be PVC water main pipe material complying with ASTM D1784 Cell Class 12454B and AWWA C900. Piping shall be plain end or gasket bell end, pressure class 200 (DR14) with cast iron pipe equivalent outside diameter.

4. Stainless steel pipe, sizes 2 inches and larger may be used above or below ground in lieu of copper, ductile iron, or plastic. Stainless steel pipe shall be schedule 10 or 304 above ground and schedule 316 below ground conforming to ASTM A312. Flanges shall be HR carbon steel plated conforming to ASTM A36. Flange exterior coating shall be Zinc plated conforming to ASTM B633. Welding wire/rod shall be 308L SS wire rod conforming to ASME SF A5.9.

    a. Underground connections shall be welded stainless steel pipe or made with a welded flange connection.

    b. Above ground connections may be with either flange or grooved Victaulic type coupler. Victaulic couplers shall be classified according to ANSI/NSF 61.

B. Poly Vinyl Chloride (PVC) Water Main Fittings shall be gray-iron or ductile iron conforming to AWWA C110/A21.10 or AWWA C153/A21.53 and shall have cement mortar lining conforming to AWWA C104/A21.4, standard thickness unless otherwise indicated on drawings. Fittings shall be mechanical joints.

C. PVC Joints and Jointing Materials:

1. Pipe joints shall be push on as specified in ASTM D3139.

2. Joints between pipe and metal fittings, valves, and other accessories shall be mechanical joints as specified in AWWA C111/A21.11.

3. Provide each joint connection with an elastomeric gasket suitable for the bell or coupling installation.

4. Gaskets for push on joints for pipe shall conform to ASTM F477.

5. Gaskets for push on joints and compression type joints or mechanical joints for connections between pipes and metal fittings, valves, and other accessories shall be as specified in AWWA C111/A21.11.

6. Sleeve-type mechanically coupled joints may be provided instead of push-on joints on plain-end PVC plastic joints. Comply with requirements of ASTM D3139.

D. Gates Valves for PVC:

1. Gate valves in a domestic plumbing system intended to convey water for human consumption shall comply with quality assurance, Article 1.3.c of this specification.

2. Non-rising stem type with resilient wedge gates or iron body bronze wedge gates and mechanical joint ends conform to AWWA C500.

3. Non-rising stem type with mechanical joints ends shall conform to AWWA C509.

4. Valves designed for a working pressure of 175 psi shall be inside-screw type with operating nut, and resilient wedge type gate. Valve shall be provided with mechanical joints as required for the pipe to which it is intended to connect.

5. Valves with UL listing of 262 shall conform to AWWA C500. Valves shall open by counter-clockwise rotation of valve stem.

6. Stuffing boxes shall be provided with O-ring stem seals and shall be bolted and constructed to permit easy removal of parts for repair.

7. Sleeve type mechanical couplings may be provided instead of mechanical and push on joint ends.

8. Valve ends and gaskets for connection to sleeve type mechanical couplings shall conform to specified requirements for the joint or coupling.

E. Gate Valves in Valve Pits:

1. Outside screw and yoke rising stem type valves with resilient wedge gates and flanged ends shall conform to AWWA C500.

2. Outside screw and yoke rising stem type valves with flanged ends shall conform to AWWA C509.

3. Outside screw and yoke type Valves with double disc gates or split-wedge type gate and flanged ended ends shall be designed for 175 psi and conform to UL 262.

4. Provide valves with hand wheels that open by counterclockwise rotation of the valve stem.

5. Stuffing boxes shall be provided with O-ring stem seals and shall be bolted and constructed to permit easy removal of parts for repair.

F. Check Valves for PVC:

1. Valves shall be swing-check type conforming to AWWA C508 or UL 312.

2. Valves shall be provided with cast iron or steel body and cover, flanged ends and clear port opening.

3. Valves shall be designed for a working pressure of 175 psi.

G. Fire Hydrants:

1. Before procurement, verify approval issued by the County of Los Angeles or Fire Department having jurisdiction.

2. Hydrants shall be wet barrel types conforming to AWWA C503 or UL 246.

3. Only 1¾-inch pentagonal nuts are to be provided on stems and protective caps.

4. Specified hydrants:

a.	Clow/Rich	# 850 or 860
b.	James Jones	#J3700 Fluted Barrel
c.	LB Ironworks	#702 Lido or 425
d.	Equal.	

H. Valve Boxes: 14¾ inches by 20 inches by 12 inches cast concrete with cast iron, traffic grade cover marked “WATER” (for use over water valves).

1. Brooks 36-H MB with No. 36-T cast iron cover EISEL 363.5, or equal.

I. Mechanical Thrust Restraint:

1. Restraint shall be incorporated into the follower gland.

2. Restraint shall consist of individually actuated wedges that increase resistance to pull out as internal pressure or external forces increase.

3. Gland shall be ductile iron conforming to ASTM A536.

4. Provide twist off nuts and tee-head bolts of the same size to ensure proper actuating of restraint devices.

5. Restraining device shall be provided with pressure rating equal to that of the pipe on which it is installed.

6. Restraining gland shall be UL listed.

7. Mechanical thrust restraint devices shall be EBAA Iron “Megalug” or equal.

J. Restraint Device Adapters:

1. Restrained flange adapters shall be provided instead of threaded or welded flange spool pieces on plain end of ductile iron or PVC pipe.

2. Flange adapters shall be manufactured of ductile iron conforming to ASTM A536 and be provided with flange bolt circles compatible with ANSI/AWWA C115/A21.15.

3. Restraint of flange adapter shall consist of a multiple number of individually actuated gripping wedges to maximize restraint capability.

4. Torque limiting actuating screws shall be provided to insure proper initial set of gripping wedges.

5. Flange adapter shall be capable of deflection during assembly or permit lengths of pipe to be field cut to allow at least 0.6 inch of gap between end of pipe and mating flange without affecting integrity of seal.

6. Flange adapter shall be provided with a safety factor of at least 2:1 for rated pressure.

7. Restraint device adapters shall be EBAA Iron “Megaflange”, or equal.

K. Tracer Wire for Nonmetallic Pipes: Tracer wires shall be electrically continuous #14 copper tracer wire, Type TW, blue plastic covered for domestic water and red for fire sprinkler. (Aluminum wire is prohibited). Provide in sufficient length to be continuous over each installed section of nonmetallic pipe.

L. Pipe markers shall be a concrete plaque inscribed with the word “WATER.”

M. Water Service Line Materials:

1. Copper Tubing: Copper tubing shall conform to ASTM B88, Type L.

2. Fittings for Copper Tubing: Fittings for solder-type joints shall conform to ANSI B16.18 or ASME/ANSI B16.22. Fittings for compression-type joints shall conform to ASME/ANSI B16.26, flared tube type.

3. Water Service Line Appurtenances:

a. Corporation stops shall be ground key type, manufactured of bronze conforming to ASTM B61 or ASTM B62, and suitable for the working pressure of the system. Ends shall be suitable for solder-joint or flared tube compression type joint connection. Threaded ends for inlet and outlet of corporation stops shall conform to AWWA C800. Coupling nut for connection to flared copper tubing and shall conform to ASME/ANSI B16.26.

b. Goosenecks shall be type K copper tubing. Joint ends for goosenecks shall be as required for connecting to corporation stop and service line. Where multiple gooseneck connections are required for individual service, connect goosenecks to service line through brass or bronze branch connection; the total clear area of branches shall be at least equal to clear area of service line. Length of goosenecks shall be as indicated or required.

c. Curb or service stops shall be ground key, round way, inverted key type; bronze, conforming to ASTM B61 or ASTM B62; and rated at 150 psi. Ends shall be as required for connection to service piping. Arrow shall be cast into body of curb or service stop indicating direction of flow.

d. Gate valves 2.5 inches and larger shall be MSS SP-80, Class 150, solid wedge, or resilient wedge gate, and non-rising stem. Valves shall be provided with flanged end connections. Provide hand wheel operators if easily accessible. Provide operating nut if inside a vault, pit or valve box.

e. Gate valves in valve pits 2 inches and smaller shall be MSS SP-80, Class 150, bronze, solid wedge, inside screw, rising stem. Valves shall be provided with flanged end connections or threaded end connections with union on one side of valve and hand wheel operator.

f. Valve boxes shall be provided at each gate valve installed underground. Valve boxes shall be a size suitable for valve on which it is installed.

N. Water meter will be installed by water purveyor for the area, unless noted otherwise.

O. Strainers:

STR-1 Description: Wye type with monel or stainless steel strainer cylinder (manufacturer's standard mesh), and gasketed machine strainer cap. Where indicated on drawings, provide with valved (globe valve) blow out piping, same size as blow out plug:

2 inches and smaller: C.M. Bailey #100-A, bronze, 250 pound, or ductile iron with fusion bonded epoxy coating.

2½ inches and larger: Watts 77F-DI-FDA-125 pound, or other ductile iron fusion bonded epoxy coated flanged strainer, conforming to ASTM A312 for the strainer body, and ASTM A240 for the stainless steel strainer element. (No iron body strainer shall be used on potable water that is not fusion bonded epoxy coated inside and out.)

C.M.Bailey, Armstrong, Wilkins, Watts, or equal.

STR-2 "Y" pattern, cast iron bodies, 125 psi, monel screen 16 square mesh. Open area at least twice the cross-sectional area of IPS pipe in which strainer is installed and may be woven wire or perforated type. Screwed ends for sizes up to 2 inches, flanged ends for 2½ inches and larger perforations, in accordance with the following:

Bailey #100, Armstrong, Rp & C , Keckley, or equal.

STR-3 Bucket type, flange, semi-steel body, 125 psi, stainless steel screen with 1/8 inch diameter perforations (mounted above grade for water service). All sizes, for mains serving fire sprinkler risers:

Bailey #1, Zurn 150 Series, Rp 7 C, Watts 97fb-Fsfe, or equal.

STR-42" and larger: Watts 077-F-SS Stainless steel flange type strainer, or equal conforming to ASTM A312 for strainer body, ASTM A240 for the SS strainer element and ASTM A36 for base flange material.

P. Backflow Preventer Assemblies:

1. Assembly shall be provided with flanged connections, ductile iron with fusion bonded epoxy coated construction, bronze, or stainless steel.

2. Backflow preventer shall be suitable for cold water working pressure of 175 psi.

3. Internal parts shall be designed for replacement without removing valves from line.

4. Double check backflow preventer assembly shall consist of two independently acting spring cam or poppet style check valves, 2 shut-off valves and 4 test cocks. Check valve shall be designed to provide drip tight closure against reverse flow, low pressure drop at maximum flow capacity. Spring-loaded checks shall cause valve to seal against a higher inlet pressure than outlet pressure when there is no flow.

5. Double check backflow preventer assembly shall meet AWWA Standard C510-89. Assembly shall be Ames 2000ss, Febco 850, Watts 709, Wilkins 350, or equal.

6. Reduced pressure backflow preventer assembly shall consist of two check valves located between two shut-off vales with an area of reduced pressure between two check valves, and a relief device arranged to discharge to atmosphere.

    a. Comply with AWWA Standard C511.

b. Fluctuation in piping pressure shall not cause cycling. Backflow preventer shall automatically maintain low pressure zone to positively prevent backflow of water into system. Assembly shall automatically indicated failure of any part vital to backflow prevention by the continuous discharge relief device.

c. Reduced pressure backflow preventer assembly shall be Cla-Val Model RP-4, or equal.

7. Backflow prevention assemblies (devices), shall be tested and certified by a certified backflow tester, and a test report shall be provided to the water agency having jurisdiction. Testing shall be performed in the presence of the project inspector.

PART 3 - EXECUTION

3.1. EXCAVATION, BACKFILLING AND COMPACTING

A. Conform to requirements in Section 31 2323 - Excavation and Fill for Utilities or Section 31 2313 - Excavation and Fill.

3.2. PIPE INSTALLATION

A. Project site water lines shall terminate approximately 5 feet from buildings, unless otherwise indicated on drawings. Temporarily cap or plug terminals for future connection to building.

3.3. CLEARANCES OF WATER LINE

A. Building or Structures: Two feet.

B. Parallel to Sewer Line:

1. Water line 4 inches or less in diameter shall not be installed in a common trench with the building sanitary drain unless the bottom of the water line is at least 12 inches above the top of the building sanitary drain, or where the water line is installed on a solid shelf, excavated on one side of the common trench, with a minimum clear horizontal distance of 12 inches from the building sanitary drain.

2. Water mains 6 inches and larger in diameter shall be separated from the project site sanitary sewer, receiving more than one building sanitary drain or acid pipeline, in accordance with the requirement of the State of California Human and Welfare Agency Department of Health Services.

C. Crossing Sewer Line:

1. A water main shall be separated from sanitary sewer in accordance with the requirements of the State of California Administrative Code, Title 22, Section 64630(e)(2).

2. Install water main a minimum of 12 inches clear, above or below a sanitary sewer.

3. A water main 6 inches or greater in diameter, crossing under a project site sanitary sewer line, shall be installed with joints located at least 10 feet away from each side of the sanitary sewer line.

4. A water main 6 inches or greater in diameter, crossing over a project site sanitary sewer line, shall be installed with joints located at least 4 feet away from each side of a purple pipe or sanitary sewer line.

D. Install water mains no closer than 10 feet horizontally clear from the edge of sewage leach fields, seepage pits, and septic tanks.

3.4. PIPE INSTALLATION AND JOINING

A. Remove fins and burrs from pipe and fittings.

B. Clean piping, fitting, valves, and accessories before installing. Maintain items in a clean condition.

C. Provide proper facilities for lowering sections of pipe into trenches. Do not drop into piping, fittings, or other materials into trenches. Accurately cut pipe and install without springing or forcing. Replace any piping or fitting that does not provide sufficient space for proper installation of joining material.

D. Blocking or wedging between bells and spigots is not permitted. Install bell and spigot pipe with bell end pointing in the direction of flow.

E. Install piping to the lines and grades indicated or required. Low points and dips are not permitted. Support piping at proper elevation and grade with secure and uniform supports. Wood support blocking is not permitted. Where sand cement slurry will not be furnished for backfill, install piping so that full length of each section of pipe and each fitting will solidly rest on pipe bedding. Excavate recesses to accommodate bells, joints, and couplings. Provide anchors and supports where indicated or required for installation. Provide proper allowances and devices for expansion and contraction of piping and systems.

F. Maintain trenches free of standing water until pipe joints have been installed.

G. At the end of each day, close open ends of pipe with temporary caps of the same material as the pipe.

H. Do not install piping when trench or weather conditions prevent proper installation.

3.5. INSTALLATION OF TRACER WIRE AND PIPE MARKERS

A. Tracer Wire: Install continuous length of tracer wire for full length of each run of nonmetallic pipe. Fasten wire to top of pipe in such a manner that it will not be displaced during construction operations. Wire shall be fastened to pipe at no greater than 20-foot intervals. Wire shall terminate above finished grade with a 12-inch lead taped around each riser. Provide a tracer wire to grade under a permanent marker where straight-line transitions of metallic to non-metallic pipe are installed.

B. Underground Pipe Markers: Provide markers at grade where non-metallic pipe is installed and for each horizontal change in direction.

3.6 CONNECTIONS TO EXISTING WATER LINES

A. After project inspector has inspected installation, perform connections to servicing water lines. Schedule service shutdown for connecting new system at a time causing minimum disruption.

B. Use a tap or drilling machine with valve and mechanical joint type sleeves for connections to waterlines under pressure, only if other means of scheduling a shutdown time have been unsuccessful, and with the approval of the City Engineer, and Project Inspector.

C. Bolt sleeves around mains; bolt valve conforming to AWWA C500 to branch. Open valve, attach drilling machine, perform tap, close valve, and remove drilling machine, without interruption of service. Notify the Project Inspector in writing at least five days prior to the date of scheduled connections.

3.7. INSTALLATION OF PVC PLASTIC WATER MAINS

A. Unless otherwise indicated, install pipe and fittings as specified and in accordance with UBPPA UNI-B-3 and AWWA M23, Chapter 7, “Installation”.

B. Jointing:

1. Provide push on joints with elastomeric gaskets specified for this type of joint, furnishing either elastomeric-gasket bell-end pipe or elastomeric-gasket couplings. For pipe-to-pipe push on joint connections, provide pipe with push on joint ends furnished with factory installed bevel; for push on joint connections to metal fittings, valves and other accessories, square cut spigot end off pipe end.

2. Provide push on joint lubricant recommended by manufacturer.

3. Install push on joints for pipe-to-pipe connections in accordance with UBPPA UNI-B-3 and AWWA M23, Chapter 7, "Installation."

4. Install push on joints for connection to fittings, valves, and other accessories in accordance with requirements of UBPPA Uni-B-3 and with applicable requirements of AWWA C600.

5. Compression-type joints/mechanical-joints with gaskets, glands, bolts, nuts and internal stiffeners shall be installed in accordance with the requirements of UBPPA UNI-B-3 and AWWA C600 and Appendix A to AWWA C 111/A21.11.

    a. Square cut spigot off end of pipe for compression-type joint/mechanical-joint connections and do not re-bevel.

6. Sleeve-type mechanical couplings shall be provided in strict accordance with coupling manufacturer’s recommendations using internal stiffeners as specified for compression-type joints.

7. Provide mechanical thrust restraint devices for anchorage and piping unless thrust blocks are indicated on the Drawings. Thrust blocks shall be installed in accordance with the requirements of UBPPA UNI-B-3 except that size and location of blocks shall be as indicated. Thrust blocks shall be provided as specified in Section 32 1313 - Site Concrete Work.

3.8. INSTALLATION OF VALVES

A. Provide gate valves conforming to AWWA C500 and UL 262 in accordance with AWWA C600 for valve and fitting installation and with recommendations of AWWA C500 Appendix “Installation, Operation, and Maintenance of Gate Valves”.

B. Provide gate valves conforming to AWWA C600 in accordance with AWWA C509 for valve and fitting installation and with recommendations of AWWA C500 Appendix “Installation, Operation, and Maintenance of Gate Valves”.

C. Provide gate valves on PVC water mains in accordance with AWWA M23 Chapter 7, “Installation.”

D. Provide check valves and fittings in accordance with applicable requirements of AWWA C600 unless noted otherwise on the drawings.

E. Provide gate and check valve joints as specified for the type of joints between pipe and fittings.

3.9. INSTALLATION OF HYDRANTS

A. Install hydrants according to requirements of AWWA C600 for hydrant installation and as indicated. Provide joints as specified for the type of joints between pipe and fittings.

B. Install hydrant with a 6-inch key gate valve between 4 and 10 feet from the hydrant.

3.10. INSTALLATION OF BACKFLOW PREVENTERS

A. Install reduced pressure backflow preventers to comply with RULE 16D of LADWP in the jurisdictional boundaries of Los Angeles Department of Water and Power.

3.11. WATER SERVICE LINE CONNECTION TO WATER MAINS

A. Connect service line to main by corporation stop and gooseneck. Install service stop as indicated on the drawings. Connect service lines to PVC plastic water mains in accordance with UBPPA UNI-B8 and AWWA M23, Chapter 9, “Service Connections”.

B. Special Requirements for Plastic Piping: Unless otherwise indicated, install pipe and fittings in accordance with ASTM D2774 and ASTM D2855. Handle solvent cements for plastic pipe jointing in accordance with ASTM F402. Install joints according to ASTM D2855. Install other joints to materials other than pipe materials in accordance with plastic pipe manufacturer’s recommendations.

C. Connect plastic pipe service lines to corporation stops and gate valves according to plastic pipe manufacture’s recommendations.

3.12. INSTALLATION OF STRAINERS:

A. Strainers shall be installed on each water main downstream of the meter, above grade at the pressure regulating station. When a pressure regulating station (assembly) is not provided, “wye” type flange strainer shall be provided, with a shut off valve on the inlet and the outlet side.

B. If the water main is serving fire sprinkler risers or hydrants, then an approved fire service strainer shall be used: Watts 97DB-FSFE, or equal.

3.13. DISINFECTION OF DOMESTIC WATER PIPING SYSTEM

A. When water piping has been installed and tested, sterilize system before use and/or substantial completion.

B. Inject solution of liquid chlorine or sodium hypochlorite and water containing at least 50 PPM of free chlorine into a system in a manner to ensure that entire system is completely filled with solution. During this procedure operate valves and test outlets for residual chlorine. Continue injection until outlets indicate at least 59 PPM of free chlorine.

C. After injection, isolate system and hold solution in retention for a period of at least 8 hours. Perform tests for residual chlorine after retention. If such tests indicate less than 50 PPM of residual chlorine, repeat entire procedure. After satisfactory sterilization has been verified, flush entire system until traces of chlorine have been removed or until chlorine content is no greater than in existing water supply.

3.14. ELECTROLYSIS PREVENTION

A. A minimum 6-inch long brass nipple shall be installed at locations specified or as required. Flanges shall be provided with a complete insulating component consisting of; gasket bolt sleeves and bolt washers. Dielectric insulators shall be installed at locations indicated or as required. Dielectric fittings are prohibited.

B. Where steel or cast iron below grade connects to copper or brass piping above grade, the transition from steel or cast iron pipe to copper or brass pipe shall be installed in an above grade accessible location.

C. Underground connections between dissimilar metals shall be in accessible yard boxes.

D. Above ground dielectric connections shall be exposed.

3.15. ABANDONING WATER LINES AND STRUCTURES

A. Water lines and appurtenances to be abandoned in place shall be cut and removed from areas where new work is being installed.

B. Cap or plug abandoned existing drain lines below grade in a yard box and according to CBC.

3.16. TESTS AND INSPECTIONS

A. Provide labor, equipment, materials, test equipment and incidentals required for performing required field tests.

B. Tests shall not be performed for five days after concrete thrust blocks have been installed.

C. Testing Procedure: Water mains and service lines shall be tested in accordance with applicable specified standard.

1. Test PVC plastic water system in accordance with UBPPA UNI-B-3 for pressure and leakage. The amount of leakage from PVC piping shall not exceed the amounts given in UBPPA UNI-B-3, except that no leakage is permitted for joints installed with sleeve type mechanical couplings.

2. Test water service lines in accordance with applicable requirements of AWWA C600. No leakage is permitted.

3. Pressure testing: Before pressure test, fill portion of piping being tested with water for a minimum of 24 hours. Provide hydrostatic pressure of at least 50 psi greater than the maximum working pressure of tested system, but no less than 200 psi hydrostatic test pressure for system piping of 2 inches in diameter and larger. Provide and maintain hydrostatic test pressure for at least two hours to ensure no leakage of any portion of piping or appurtenances under pressure test.

3.17. CLEANING

A. Remove rubbish, debris, and waste materials and legally dispose of off the project site.

3.18. PROTECTION

A. Protect the work of this section until substantial completion.

END OF SECTION

SECTION 33 3000
SITE SANITARY SEWER UTILITIES

PART 1 - GENERAL

1.1. SUMMARY

A. Section Includes:

1. Site sanitary sewer systems from the building, to the existing site sanitary sewer.

B. Related Requirements:

1. Division 01 - General Requirements.

2. Division 23 - Mechanical.

3. Section 31 2313 - Excavation and Fill.

4. Section 31 2323 - Excavation and Fill for Utilities.

5. Section 32 0117 - Pavement Repair.

6. Section 32 1313 - Site Concrete Work.

1.2. SUBMITTALS

A. Shop Drawings: Submit site plan denoting locations of lines, valves, and appurtenances.

B. Product Data: Manufacturer’s catalog data for materials. Include technical data for accessories, gaskets, joints and couplings.

C. Certificates: Certificates attesting that tests set forth in referenced publication have been performed, and the results required by design have been met.

1.3. QUALITY ASSURANCE

A. Comply with the following as a minimum requirement:

1. Standard Specifications for Public Works construction, current edition.

2. California Plumbing Code, CPC, current edition.

3. California Administrative Code, Title 22, Section 64630(e)(2).

PART 2 – PRODUCTS

2.1. MATERIALS

A. Pipeline:

1. Acid pipeline from neutralizing tank to building sanitary drain, or project site sanitary sewer: See Division 15 for corrosive waste piping.

2. Building or project site sanitary sewer:

a. Cast iron soil, hubless, service weight, with stainless steel-banded hubless coupling. FS WW-P-401, conforming to CISPI 310 and IAPMO IS 6. Manufactured by American Foundry, Tyler, or equal.

b. Vitrified clay extra strength with plain end, meeting the requirements of ASTM C700, installed with mechanical compression couplings. Joints conforming to ASTM C425. Installation shall be in accordance with ASTM C12. Manufactured by Mission Clay Products, or equal.

c. Acrylonitrile-Butadiene-Styrene Schedule 40 plastic drainpipe and fittings meeting the requirements of ASTM D2661 and D3311. Provide ABS solvent cement for piping and joint connections and install in accordance with IAMPO Standards IS 5, 9, and UPC Section 718.

B. Cleanout Assemblies: Cleanout plug shall be line size.

1. In covered concrete-paved floors: Iron body with UPC recognized plug, top, and adjustable sleeve, cut-off ferrule, polished brass/nickel/bronze, and secured scoriated cover:

Square:	SMITH	JOSAM	ZURN	Equal	
4053	56030-2	Z-1400			
Round:	SMITH	JOSAM	WADE	ZURN	Equal
4033	56010-2	W-6000	Z-1400		

2. Outside covered concrete-paved floors: Secured cover, extra heavy-duty, adjustable sleeve, cut-off ferrule, UPC recognized brass type plug, scoriated tractor type cover:

SMITH	JOSAM-	ZURN	WADE	Equal
4233	56050-2	Z-1402-HD	W-7030-Y	

2. In yard boxes: Raised threaded head brass plug.

WADE 8590A, SMITH, ZURN, JOSAM, or equal.

C. Yard Boxes: Brooks No. 3-TL, NDS, EJIW, or equal, with cast-iron locking cover with the word “SEWER,” embossed on the cover in one inch high upper case lettering.

D. Concrete, Mortar and Related Materials: Conform to Section 32 1313 - Site Concrete Work, unless noted otherwise.

E. Metal Covers, Frames and Accessories:

1. Conform to Section 206 – Miscellaneous Metal Items of the Standard Specifications for Public Works Construction.

2. Metal Covers and Frames: Vandal-resistant design and construction.

3. Hot-dip galvanize steel parts after fabrication and prior to assembly in accordance with Section 210 – Paint and Protective Coating of the Standard Specifications for Public Works Construction.

F. Bedding Materials: Conform to the requirements of Section 31 2313 - Excavation and Fill or Section 31 2323 - Excavation and Fill for Utilities, as required.

PART 3 – EXECUTION

3.1. SANITARY SEWER INSTALLATION

A. Install sanitary sewers in a uniform alignment and slope to the point of connection as indicated. Before trench excavation, verify size, material, depth, and location of the point of connection.

B. Pipe slope shall not be less than ¼ inch per foot or 2 percent unless pipe inverts are indicated. Where invert elevations are indicated, install pipe at a uniform slope between inverts.

C. Join pipes and fittings as recommended by the manufacturer.

3.2. CLEARANCE OF SANITARY SEWERS

A. Buildings or Structures: Two feet.

B. Parallel to water line:

1. Building sanitary drain is not permitted to be installed in a common trench with a potable water line unless the bottom of the water line is at least 12 inches above the top of the sanitary sewer.

2. In addition, the potable water line shall be installed on a solid shelf excavated on one side of the common trench with a minimum clear horizontal distance of 12 inches from the sanitary sewer or building sanitary drain.

3. Project site sanitary sewer, receiving more than one building sanitary drain or acid pipeline, shall be separated from a potable water line in accordance with the requirements of the California Health and Human Services Agency Department of Public Health.

C. Crossing Water Line:

1. Building sanitary drain shall be installed a minimum of 12 inches below the potable water line.

2. Project site sanitary sewer shall be separated from the potable water main in accordance with the requirements of the State of California Administrative Code, Title 22, Section 64630(e)(2).

3.3. MANHOLES

A. Provide manholes in accordance with the Standard Plans for Public Works Construction, unless otherwise indicated.

B. Adjust manholes in accordance with the sub-section 302-5.8 Manholes (and other structures) of the Standard Specifications for Public Works Construction.

3.4. CLEANOUTS

A. Provide cleanout at the upper terminal for each sanitary pipeline, at intervals not exceeding 100 feet in straight run and any fraction thereof, and for each aggregate horizontal change in direction exceeding 135 degrees.

B. Install required cleanouts before back filling horizontal pipelines.

C. In unpaved and asphalt-paved areas, install cleanouts in yard boxes 2 inches below the yard box cover.

D. In concrete-paved areas, extend cleanouts flush with finish grade.

E. In traffic areas, install countersunk cleanout plugs where raised heads protrude.

3.5. ABANDONED SEWERS AND STRUCTURES

A. Plug or cap every abandoned sanitary sewer within 5 feet of the property line in a code required manner.

B. Demolish abandoned sanitary structures such as cesspool, septic tank, sewage pit, and manholes to a minimum depth of 5 feet below the finish grade, including removal of sewage. Disconnect any piping. After inspection, completely fill with earth, sand, gravel, cement-sand slurry, or other required material.

3.6. TESTING

A. After installation, test each sanitary drain and/or sewer and each section between successive manholes for either infiltration or exfiltration. Test shall be conducted in accordance with Section 306 - Underground Conduit Construction of the Standard Specifications for Public Works Construction.

B. Where excessive ground water is encountered test the pipeline for infiltration.

C. When infiltration or exfiltration exceeds allowable amounts as set forth in the Section 306 formula, perform repairs or replacements as necessary to comply with the required limits.

3.7. PROTECTION

A. Protect the Work of this section until substantial completion.

3.8. CLEANUP

A. Remove rubbish, debris, and waste materials and legally dispose of off the project site.

END OF SECTION

SECTION 33 4000
STORM DRAINAGE UTILITIES

PART 1 - GENERAL

1.1. SUMMARY

A. Section Includes:

1. Catch basins, grates and frames, culverts, curb inlets, drainage pipes, sub-surface drains, manhole covers and frames, and surface run-off collection.

2. Stormwater treatment systems:

a. Infiltration BMP.

B. Related Requirements:

1. Division 01 - General Requirements.

2. Section 01 7415 - Storm Water Pollution Prevention Plan.

3. Section 01 7417 – BMP Implementation Plan.

4. Section 22 1000 - Plumbing.

5. Section 31 2323 - Excavation and Fill for Utilities.

6. Section 32 0117 - Pavement Repair.

7. Section 32 1313 - Site Concrete Work.

C. Definitions:

1. BMP: Best Management Practice.

2. Post Construction BMP: Devices, installed by the Contractor for stormwater management, to be left onsite after construction completion.

3. SWPPP: Storm Water Pollution Prevention Plan.

1.2. SUBMITTALS

A. Shop Drawings: Submit site plan denoting locations of lines, valves, and appurtenances.

B. Product Data: Manufacturer’s catalog data for all required materials. Include technical data for accessories, information concerning gaskets, joints and couplings.

C. Certificates: Certificates attesting that tests set forth in referenced publications have been performed, and the results required by design have been met.

D. Closeout Documents: Submit two CD's and one hard copy of the following documents to the City Engineer at substantial completion:

1. Maintenance Log: Provide Microsoft Excel spreadsheet containing the following information:

a. Maintenance log and upkeep records of the installed post construction BMP. Include the following headers as a minimum: "Date of Service", "Location of BMP", "Type of Maintenance or Service", "Notes", "Next Scheduled Preventive Maintenance Due", and "Inspector Signature".

b. Maintenance Requirements: Include the following headers as a minimum: "BMP Description", "Location of BMP and Map Grid Location" and "Type of Maintenance or Service Needed", i.e.; weekly, monthly, quarterly, etcetera. "Stock No.", "Manufacturer Contact Information", along with "Frequency" i.e.: weekly, monthly, quarterly, etcetera and "Special Instructions".

2. Maintenance Manuals: Provide Maintenance Manual, for installed storm drainage BMP components, along with requirements, replacement or maintenance schedule, and plans with the location of each BMP component. This manual shall include product information cut sheets, shop drawings, vendor information for each component and warranty.

3. Record drawings: 'As-Builts' site plan(s) showing post construction BMP. Provide a copy of a marked record set, with red pencil identifying any variations from design documents.

4. Training Documentation:

a. City designated attendees sign off training sheet.

b. Two DVD's of materials covered in the training and components installed.

5. Post-construction BMP Maintenance Plan: Submit complete plan per Attachment "A", edit per as-built conditions and provide missing information.

1.3. QUALITY ASSURANCE

A. Comply with the following as a minimum requirement: Standard Specifications for Public Works Construction, current edition.

1.4. TRAINING OF CITY PERSONNEL

A. At substantial completion, and when the storm drainage system is operational, representatives from the contractor and manufacturer(s) of the components, specified and installed at the site, shall provide up to 8 hours of training. Date, time and location for the training shall be coordinated through the City Engineer. Have the City designated attendees sign off training sheet and provide a copy to the City Engineer.

B. Training period shall cover but not be limited to the following:

1. Explain the operation of storm drainage system and its design intent.

2. Explain the maintenance requirements of every component of the system.

3. Provide recommendations of practices to minimize or eliminate negative impact on the system.

4. Provide maintenance schedule, as recommended by the manufacturers, for every component, and review it with the City Maintenance and Operations staff.

5. Conduct a site walk, identify every component of the system and demonstrate its operation.

6. Training shall be conducted with the use of a Maintenance log and Maintenance manual.

1.5. SURPLUS MATERIALS

A. Provide sufficient additional materials for each component of BMP that requires replacement or service during the first year.

PART 2 – PRODUCTS

2.1. MATERIALS

A. Storm Drain Pipe: Provide in conformance with Section 207 - Pipe and Section 208 - Pipe Joint Types and Materials of the Standard Specifications for Public Works Construction.

B. Concrete, Mortar and Related Materials: Conform to Section 32 1313 - Site Concrete Work.

C. Metal Covers, Grates, Frames and Accessories:

1. Conform to Section 206 - Miscellaneous Metal Items of the Standard Specifications for Public Works Construction.

2. Hot-dip galvanize steel parts after fabrication and before installation, in accordance with Section 210 - Paint and Protective Coatings of the Standard Specifications for Public Works Construction.

3. Grates and Frames: Vandal-proof design and construction.

E. Bedding Material for Pipe: Conform to the requirements of Section 31 2313 - Excavation and Fill or Section 31 2323 - Excavation and Fill for Utilities.

F. Subsurface Drain Fabric: Non-woven geotextile filter fabric:

1. TenCate Geosynthetics Americas, Mirafi 140N.

2. US Fabrics, Inc., 120NW.

3. Propex Fabrics, Inc., Geotex 451.

4. Equal.

2.2. STORMWATER TREATMENT SYSTEMS

A. Retention Systems

1. Permavoid Pv-150

2.3. NAMEPLATES:

A. Stainless steel or aluminium nameplate permanently fastened to BMP showing the following information:

1. BMP ID number and BMP type.

2. Next service day, followed by a 1-inch by 4-inch long blank space.

3. Manufacturer name, model number, telephone number, and stock ID number.

4. Installation or production date.

5. 1-inch by 4-inch blank space for the City's use.

PART 3 – EXECUTION

3.1. EXCAVATION, BACKFILLING AND COMPACTING

A. Conform to the requirements of Section 31 2313 - Excavation and Fill or Section 31 2323 - Excavation and Fill for Utilities.

3.2. INSTALLATION OF PIPE

A. Conform to Section 306 - Underground Conduit Construction of the Standard Specifications for Public Works Construction.

B. Non-ferrous drainpipe, installed with less than 12 inches of cover to finish grade, shall be provided with a 4-inch thick concrete pipe encasement.

3.3. DRAINAGE APPURTENANCES

A. Catch basins, junction chambers, manholes, box culverts, outlet chambers and other drainage structures: Construct as indicated on drawings and as specified in Section 32 1313 - Site Concrete Work.

B. Ensure that post construction BMP have a visible identifying manufacturer tag with product identification, manufacturer contact information, date of last service and date of next service due.

C. Provide storm drain stencil per City requirements.

3.4. STORMWATER TREATMENT SYSTEMS

A. System to be installed per manufacturer's instructions.

3.5. ABANDONED DRAINAGE LINES AND STRUCTURES

A. Cap or plug existing drain lines that are cut and abandoned, and remove existing drainage structures that are abandoned.

3.6. CLEANUP

A. Remove rubbish, debris, and waste materials and legally dispose of off the project site.

B. Maintain post construction BMP after installation, and keep a maintenance log to be turned over to the City Engineer at substantial completion.

3.7. PROTECTION

A. Protect the work of this section until substantial completion.

END OF SECTION

APPENDIX

CITY OF LOS ANGELES
INTER-DEPARTMENTAL CORRESPONDENCE

DATE: August 23, 2017

TO: Mahmood Karimzadeh, A.I.A. Principal Architect
Architechtural Division

Attn: Alexander Ngo, Project Manager

FROM: Patrick J. Schmidt, PE, GE, Acting Group Manager
Geotechnical Engineering Group (GEO)

SUBJECT: **GEOTECHNICAL ENGINEERING REPORT**
GRANADA HILLS POOL REPLACEMENT PROJECT
W.O. E170517A **GEO FILE # 17-074**

Transmitted is one original wet signed and stamped copy of the geotechnical engineering report for the Granada Hills Pool Replacement Project. GEO will submit two copies of this report to the Department of Building and Safety, Grading Division upon receipt of an IDO.

If you have any questions regarding this report, please contact Joy Welling at (213) 847-0492.

Q:\PROJECTS\2017\17-074 Granada Hills Pool Replacement\Report\Cover Letter.doc

CITY OF LOS ANGELES
DEPARTMENT OF PUBLIC WORKS
BUREAU OF ENGINEERING

GEOTECHNICAL ENGINEERING GROUP

GEOTECHNICAL ENGINEERING REPORT
GRANADA HILLS POOL REPLACEMENT PROJECT
TRACT: SUBDIVISION NO. 1 OF THE PROPERTY OF THE PORTER LAND AND WATER COMPANY, BLOCK: NONE, LOT: 2 SEC 18 T2N R15W
LOS ANGELES, CALIFORNIA

W.O. #E170517A
GEO FILE # 17-074
AUGUST 22, 2017

7.0 SUPPLEMENTAL GEOTECHNICAL SERVICES 12
7.1 REVIEW OF PLANS AND SPECIFICATIONS 12
7.2 GEOTECHNICAL OBSERVATION AND TESTING DURING CONSTRUCTION 12
8.0 CLOSURE 12

Figure 1 – Vicinity Map
Figure 2 – Site Plan
Figure 3 – Geologic Map
Figure 4 – Seismic Hazard Zones Map
Figure 5 – Axial Compression of CIDH piles in Compression
Figure 6 – Lateral Load Behavior for a 24-inch diameter CIDH pile, Free Head
Figure 7 – Lateral Load Behavior for a 24-inch diameter CIDH pile, Fixed Head
Figure 8 – Lateral Load Behavior for a 30-inch diameter CIDH pile, Free Head
Figure 9 – Lateral Load Behavior for a 30-inch diameter CIDH pile, Fixed Head

Appendix A– Geotechnical Data Report, Granada Hills Pool Replacement Project, 16730 Chatsworth Street, Los Angeles, California by Geocon West, Inc. dated July 31, 2017

1.0 INTRODUCTION

This report presents the results of our geotechnical investigation for the proposed Granada Hills Pool Replacement project. The project site, as shown on Figure 1 –Vicinity Map, is located near the Chatsworth Street and Petit Avenue intersection in Granada Hills Park. The project address is 16730 Chatsworth Street. The purposes of this investigation were to evaluate the nature and engineering properties of the subsurface materials and develop geotechnical recommendations for design and construction of the project. The City of Los Angeles, Department of Public Works, Bureau of Engineering, Geotechnical Engineering Group (GEO) has prepared this report in response to the Architectural Division's request on March 17, 2017.

2.0 PROJECT DESCRIPTION

The project consists of demolishing the existing pool and constructing a new one. The proposed pool footprint is presented on Figure 2 – Site Plan. As shown on Figure 2, the new pool length will remain the same; however, the width will be enlarged slightly. The east side will extend out approximately 15 feet from its current location. The project also includes construction of a new pool deck, a diving platform, a shade structure, and other site improvements. We understand the existing bathhouse will be renovated but new foundations and/or foundation upgrades are not anticipated at this time. This report does not provide recommendations for the bathhouse renovation. Storm water infiltration is also proposed.

The proposed grades are expected to be within one to two feet of the existing ones, except for in the existing and proposed pool areas. The earthwork will likely involve cuts on the order of 12 feet high and fills on the order of 2 to 3 feet thick. We expect the maximum pool depth to be approximately 12 feet.

Structural loads for the shade structure were not provided to us at the time of this report. We expect the maximum applied bearing pressure to be 2,000 pounds per square foot (psf) for shallow foundations (i.e. footings). The shade structure may be supported on deep foundations instead of shallow footings.

If significant changes to the project are proposed, the findings and recommendations in this report may not be applicable, and a supplemental report may be required. GEO should be provided an opportunity to review any proposed changes and determine if a supplemental report is required.

3.0 GEOTECHNICAL INVESTIGATION

Our geotechnical investigation included field exploration and laboratory testing. Geocon West, Inc. (Geocon) performed the field exploration and laboratory testing for GEO. A copy of their data report is provided in Appendix A of this report. The findings and information presented in this report are based on the information contained in Geocon's data report. GEO has reviewed their report, concurs with the information contained in it, and accepts responsibility for the use of its contents.

3.1 FIELD EXPLORATION PROGRAM

Geocon's field exploration consisted of drilling six hollow-stem auger (HSA) borings. Infiltration test wells were installed in two of the borings. Borings HSA-1 through HSA-3 were drilled to a depth of approximately 26½ feet below ground surface (bgs), and HSA-4 was drilled to a depth of approximately 31½ feet bgs. The infiltration test wells, IT-1 and IT-2, were drilled to depths of approximately 5 and 10½ feet bgs, respectively. The approximate boring locations are presented on the Field Exploration Location Map in Geocon's' data report (Appendix A). The subsurface conditions encountered in the borings and infiltration test wells are discussed in Section 4.3, and the infiltration test results are discussed in Section 4.5.

3.2 LABORATORY TESTING PROGRAM

The laboratory testing program consisted of in-situ moisture content and dry density, direct shear, grain size distribution (i.e. sieve analyses), fines content, Atterberg Limits, expansion index, laboratory maximum dry density and optimum moisture content, and corrosion potential (pH, minimum resistivity, sulfate concentration, and chloride concentration). The laboratory test results were used to develop the soil engineering properties, which are discussed in Section 4.6.

4.0 DISCUSSION OF FINDINGS

The following discussion of findings is based on our observations and the results of the field exploration and laboratory testing programs (Appendix A).

4.1 GEOLOGIC SETTING

The Geologic Map by Thomas W. Dibblee Jr. (1991), as shown on Figure 3 – Geologic Map, indicates the site is underlain by Quaternary alluvium (Qa). The alluvium is described as gravel, sand and clay of valley areas (Dibblee Jr., 1991).

4.2 SITE CONDITIONS

The project site is located on the east side of the Granada Hills Recreation Center. The site is presently developed with an existing swimming pool and a single-story pool house on the west side of the pool. The pool house is not currently being used. The existing pool ranges in depth from 3 feet at the north and south ends to approximately 11 feet deep in the middle portion. The existing pool equipment building, which will remain, is located on the east side of the pool. There is an existing concrete pool deck surrounding the pool and a chain-link fence along the perimeter of the deck. There are several security lights outside of the pool deck area and adjacent to the perimeter fence. There is an existing driveway adjacent and east of the pool area which runs north/south. On the south side of the south perimeter chain-link fence is an existing shade structure which is to remain in place. The site and surrounding areas are relatively flat with an average elevation of approximately 937 feet above mean sea level (NavigateLA).

4.3 Subsurface Conditions

Uncertified fill was encountered in all six HSA borings. The fill thickness varies from approximately 4 to 6 feet below ground surface (bgs). The fill is mostly comprised of poorly graded sand with silt or silty sand, although sandy silt was encountered in HSA-4. Fill indicators including plastic debris, asphalt and brick fragments were observed in the uncertified fill.

The boring logs indicate significant variation in the composition of the native soil, but overall the native soil is mostly fine grained. The upper native soil mostly consists of lean to fat clay; although sandy silt to silt was encountered in HSA-2 and IT-2, it's possible this material may have been classified incorrectly. The clayey soil extends to a depth ranging from approximately 7½ to 15 feet bgs. The underlying soil mostly consists of interbedded silty sand and sandy silt. Refer to the boring logs for additional information.

4.4 Groundwater

Groundwater was not encountered in any of the borings to the maximum explored depth of approximately 31½ feet bgs. Groundwater information obtained from California Department of Conservation, Division of Mines and Geology (DMG, 1998) indicates the shallowest reported historic groundwater depth is on the order of 70 feet bgs. Groundwater levels are expected to fluctuate with seasonal rainfalls, dry weather (i.e. drought conditions), and pumping activities in the vicinity of the site. Nevertheless, groundwater is not expected to affect the proposed project.

4.5 Infiltration Testing

Two borehole infiltration tests were performed to evaluate the feasibility of onsite stormwater infiltration. The infiltration rate was estimated using the general guidelines in the County of Los Angeles, Department of Public Works, Geotechnical and Materials Engineering Division's (2014) Administrative Manual. The infiltration measurements were averaged over a period where a steady-state flow condition was achieved. The adjusted infiltration rates were found to range from approximately 0.05 to 0.07 inch per hour. The feasibility of stormwater infiltration is discussed in Section 6.6 of this report.

These infiltration rates are applicable to conditions near the test well location and between the approximate infiltration depths; however, they should not be considered a guarantee of infiltration conditions at other locations onsite. Minor changes in soil composition can cause significant differences in infiltration rates. The above rates should only be used for design with an understanding of the limitations of the testing method and complexities of subsurface drainage.

4.6 Soil Engineering Properties

Laboratory tests were performed on selected samples to characterize the engineering properties of the fill and native soil. The individual laboratory test results are included in Geocon's data report (Appendix A).

Moisture content and in-situ dry density tests were performed on samples of the native soil to evaluate the total unit weight. The in-situ dry density and moisture content of the native soil was found to range from approximately 86 to 119 pounds per cubic foot (pcf) and 5.8 to 21.6 percent, respectively. The average total unit weight of the native soil was found to range from approximately 99 to 135 pcf with an average value of 125 pcf.

Direct shear tests were performed on three undisturbed samples of the native clayey soil. These materials were sampled at depths between approximately 6 and 11 feet bgs. Based on Geocon's interpretation of the test results, the ultimate friction angle and cohesion value ranges from 24 to 31 degrees and 120 to 520 pounds per square foot (psf), respectively. Based on our interpretation of the test results, the ultimate friction and cohesion value of the native soil is 31 degrees and 100 psf, respectively.

Atterberg Limits tests were performed on four samples of the native clayey soil, which were collected at depths between 5 and 11 feet bgs. The plasticity index (PI) of the native clay was found to range from 17 to 36, with an average of 27. The test results indicate this material has a high shrink-swell potential.

An expansion index (EI) test was performed on the near surface sandy silt (fill material) from HSA-4, and the EI value was found to be 30. The EI value indicates the near surface soil has a low expansion potential.

Finally, a compaction test was performed on a bulk sample of the near surface silty sand (fill material) from HSA-1 to determine the maximum dry density and optimum moisture content. The compaction test results indicate that the optimum moisture content and maximum dry density of this material is approximately 8.0 percent, and 132.0 pcf, respectively.

5.0 SEISMIC CONSIDERATIONS

The following sections present seismic design parameters and discuss seismic hazards for the site.

5.1 2017 LABC Seismic Design Parameters

Seismic design parameters for the project were developed in accordance with the 2017 City of Los Angeles Building Code (2017 LABC). The parameters are based on mapped spectral acceleration values in the 2017 LABC, and the site conditions.

The seismic design parameters for the site are summarized in Table 1.

TABLE 1 – SEISMIC DESIGN PARAMETERS

Parameter	Value	Reference
Site Class	D	ASCE 7-10 Table 20.3-1
S_S	2.301	ASCE 7-10 Figure 22-1
S_1	0.768	ASCE 7-10 Figure 22-2
S_{MS}	2.301	ASCE 7-10 Equation 11.4-1
S_{M1}	1.152	ASCE 7-10 Equation 11.4-2
S_{DS}	1.534	ASCE 7-10 Equation 11.4-3
S_{D1}	0.768	ASCE 7-10 Equation 11.4-4
T_O (seconds)	0.100	ASCE 7-10 Chapter 11
T_S (seconds)	0.501	ASCE 7-10 Chapter 11

The peak ground acceleration (PGA_M) at the site is 0.86g.

5.2 SEISMIC HAZARDS

This section provides the results of our evaluation of earthquake-related geologic/geotechnical hazards for the site, including surface fault rupture, and liquefaction.

5.2.1 Surface Fault Rupture

The project site, as shown on Figure 4 – Seismic Hazard Zones Map, is not located within a State of California Alquist-Priolo Special Study Zone, nor is it located within a City of Los Angeles Fault Rupture Study Zone (NavigateLA). The closest fault is the Northridge Hills Fault, which is approximately 0.7 miles (1.1 km) from the site. Based on this information, the potential for surface fault rupture to occur at the site is considered remote.

5.2.2 Liquefaction

The site is not within a potentially liquefiable zone (see Figure 4). Groundwater was not encountered in our borings to a maximum explored depth of approximately 31½ feet bgs. Furthermore, the historical high groundwater depth is reported to be around 70 feet bgs. Therefore, the potential for liquefaction to occur at the site is considered remote.

6.0 RECOMMENDATIONS

Based on the results of our investigation, the proposed project is considered geotechnically feasible provided the recommendations presented in this report are incorporated into the design and construction. If changes in the design are made, or variations or changed conditions are encountered during construction, GEO should be notified to determine if supplemental recommendations are required.

6.1 EARTHWORK

All earthwork shall be performed in accordance with the geotechnical recommendations presented in this report and the Los Angeles Department of Building and Safety (LADBS), Grading Division requirements. Furthermore, all earthwork shall be performed under GEO's observation.

6.1.1 Site Preparation

Site preparation will initially involve the demolition of the existing swimming pool and concrete deck surrounding the pool. Following demolition, the construction area should be cleared of any vegetation and stripped of miscellaneous debris and other deleterious material. Tree removal, if proposed outside the existing pool deck area, shall include the rootballs and/or root systems. Organic matter and other material that may interfere with construction should be removed. Vegetation and organic matter should not be incorporated into the fill material. Organic rich soil, if present, may be stockpiled for future landscaping. Voids resulting from the demolition shall be backfilled with properly compacted fill (see Section 6.1.5).

Any utilities, whether active or inactive, shall be identified. If required, these utility lines shall be properly abandoned and/or relocated per project plans and specifications. Any depressions resulting from removal of any existing foundations or utility lines shall be properly backfilled and compacted (Section 6.1.6).

6.1.2 Over-Excavation

All existing fill shall be removed beneath the pool. Fill removal is also required beneath the shade structure if it is supported on shallow foundations.

The existing soil beneath the proposed pool shall be excavated to the design subgrade elevation or to expose native soil, whichever is greater. An additional removal of 12 inches shall be performed such that the pool bottom is underlain by at least 12 inches on non-expansive compaction fill. Lateral over-excavation beyond the limits of the pool is not required.

If the shade structure is supported on shallow foundations, the over-excavation and replacement shall result in at least 30 inches of compacted fill beneath the bottom of footing(s). This 30 inches includes the subgrade preparation. The excavation shall extend laterally at least 24 inches beyond the edges of the footings.

Existing fill may be left in-place beneath non-structural footings and the new pool deck. The earthwork beneath non-structural footings, including the subgrade preparation (see Section 6.1.3), shall result in at least 24 inches of compacted fill below the bottom of footing. The excavation shall extend laterally beyond the footing a distance of 2 feet or to the property boundary, whichever is less. The new pool deck shall be underlain by at least 18 inches of compacted fill, which includes the subgrade preparation (see Section 6.1.3).

6.1.3 Subgrade Preparation and Stabilization

Excavation bottoms shall be scarified at least 6 inches, moisture conditioned to within 3 points above the optimum moisture content, and compacted to a minimum 90 percent relative compaction (RC), as determined by ASTM D1557. All excavation bottoms shall be observed, tested, and approved by a representative of GEO and the LADBS Grading Inspector prior to placement of fill.

We were unable to advance a boring in the deeper portion of the existing pool; however, based on our experience from other similar pool reconstruction projects, we expect the fine grained soils in the deeper portions to be soft and yielding. They are likely to exhibit moisture contents significantly higher than the optimum value in terms of relative compaction. If soft and yielding conditions are encountered, the bottom shall be excavated an additional 12 inches. This 12-inch thick removal is separate and in addition to the over-excavation discussed in Section 6.1.2. The "new" bottom shall be lined with Mirafi 600X or approved equal stabilization geotextile. A 12-inch thick layer of ¾-inch to 1-inch crushed rock shall be placed on top of stabilization geotextile. The top of the crushed rock layer shall be covered with Mirafi 140N or approved equal filter cloth.

6.1.4 Temporary Excavations

Based on our observations during subsurface investigation and results of laboratory tests, the materials at the site should be readily excavated by conventional earthmoving equipment in good operating condition. All temporary excavations shall conform to the State of California Construction Safety Orders (CAL/OSHA).

Unsurcharged vertical excavations shall not exceed 5 feet. Unsurcharged excavations greater than 5 feet and to a maximum of 10 feet shall be sloped at a 1:1 (H:V) or flatter inclination from the ground surface to the bottom of the excavation. Excavations greater than 10 feet high shall be sloped at 1.5:1 (H:V).

6.1.5 Fill Materials and Placement

The existing native clay shall not be reused as compacted fill. It should be removed from the job site or placed in landscaped areas. The remaining onsite fill and native soil is suitable for reuse provided it is free of organic material, debris, and does not contain fragments greater than 3 inches in maximum dimension. Drying of wet site soils or mixing of these soils with dryer soils may be required prior to being used as compacted fill.

Import fill may also be used instead of the native soil. Import fill material shall be predominantly granular (minimum 80% passing number 4 sieve and between 10% and 35% passing the number 200 sieve), and non-expansive (EI less than 25). Also, the import fill material shall be free of organic or inorganic debris, contamination and materials with any dimension larger than 3 inches. Import material shall be reviewed for approval by GEO prior to importing to the job site. GEO shall be notified a minimum of three working days prior to scheduled importing of soil to the project site.

Fill material shall be placed in loose lifts not exceeding 8 inches in thickness, moisture conditioned to within 3 percent above optimum, and mechanically compacted.

Primary structural fill shall be compacted to at least 95 percent RC, as determined by ASTM D1557. 90 percent RC is acceptable if the results of a hydrometer test indicate the actual fill material contains at least 15% finer than 0.005 mm sieve. Non-structural (i.e. secondary) fill shall be compacted to a minimum of 90 percent RC.

Fill placement and compaction shall be observed and tested by GEO. Compacted fill soils shall be kept moist (at or slightly above the specified moisture content at the time of compaction), but not flooded, until covered with subsequent construction. If compacted fill becomes disturbed, it shall be reworked or removed and replaced. Certification and inspection approvals for compromised soils are void and invalid.

6.1.6 Utility Trench Backfill

Trench excavations for utility pipes may be backfilled with non-expansive onsite soils under the observation of a representative of GEO. After utility pipes have been laid, properly bedded, and covered per the project specifications, they shall be backfilled to the ground surface or design subgrade with controlled backfill. Controlled backfill shall be moisture conditioned, placed and compacted in accordance with the recommendations presented in Section 6.1.5 of this report. Densification by flooding or jetting is not allowed.

6.1.7 Fill Certification

Upon successful completion of fill placement and compaction, GEO will issue a Compaction Certification for the fill. Unless approved by the Building Inspector during construction, the Contractor shall not pour footings until an approval letter is issued by the LADBS, Grading Division for the Compaction Certification. The contractor may excavate in compacted fill for foundation elements before the fill certification approval letter is issued, but does so at his/her own risk.

6.2 Shallow Foundations

The shade structure may be supported on shallow foundations. Recommendations for bearing capacity and settlement and lateral load resistance are provided in the following sections.

6.2.1 Bearing Capacity and Settlement

Continuous and isolated footings shall bear entirely upon at least 30 inches of compacted fill. Continuous footings shall be at least 18 inches wide, and isolated footings shall be at least 24 inches wide. All footings shall be embedded at least 24 inches below lowest adjacent grade.

Footings may be designed using an allowable (net) bearing capacity of 2,500 psf, which applies to combined dead and sustained live loads. It may be increased by ⅓ when considering transient live loads, including wind and seismic forces.

Based on the allowable bearing value recommended above, total static settlement of the shallow footings is anticipated to be less than 1-inch. Differential settlement is expected to be less than ½-inch.

6.2.2 Lateral Load Resistance

Lateral load resistance for footings will be developed by passive soil pressure against the sides of the footing and by friction acting at the base of the footing. An allowable passive pressure of 275 psf per foot of depth, beginning from 1 foot below the lowest adjacent grade, may be used for design purposes. An allowable passive pressure of 275 psf per foot of depth, beginning from the ground surface, may be used if the footing is located adjacent to an exterior slab or paved surface. The allowable passive pressure is only applicable for level (ground slope equal to or flatter than 5:1) conditions. An allowable coefficient of friction of 0.35 may be used for dead and sustained live loads for frictional resistance of the footings constructed directly on compacted fill. A safety factor of 1.5 has been incorporated into both the allowable passive and frictional resistance values. The passive pressure and frictional resistance may be increased by ⅓ under seismic and wind loading conditions.

6.3 Deep Foundations Alternative for Shade Structure

Shade structures may be supported on cast-in-drilled-hole (CIDH) piles as an alternative to shallow foundations. Recommendations for design and construction are provided in the following sections. It is important to note that the CIDH pile recommendations in the following sections are based on an assumed fill thickness of 6 feet.

6.3.1 Axial Capacity in Compression

The minimum pile diameter and pile spacing shall be 24 inches and 3 pile diameters, respectively. Axial compression capacities are presented on Figure 5 for 24-inch and 30-inch diameter CIDH piles. The minimum pile embedment depth shall be 9 feet below the lowest adjacent grade, and at least 3 feet into native soil, whichever is greater. The actual depths may be deeper and will also depend on the required lateral and tensile loads.

The axial compression capacities presented on Figure 5 assume the piles develop their capacity solely from skin friction or side resistance. As shown on Figure 5, no skin friction was derived from the existing uncertified fill.

The total settlement for each pile is not expected to exceed ½-inch provided the piles are properly constructed (see Section 6.3.4).

6.3.2 Axial Capacity in Tension

The allowable axial tensile capacity may be assumed to be ½ the axial capacity in compression for the 24-inch and 30-inch diameter CIDH piles (Figure 5). The weight of the concrete shaft may be added to the tensile capacity.

6.3.3 Lateral Load Behavior

The lateral load behavior of the CIDH piles was evaluated using using the LPILE (Ensoft, 2013) software program. LPILE (2013) uses load deflection (p-y) curves to approximate the relationship between soil resistance and pile deflection. The lateral load behavior was evaluated for both a free head deflection of ½-inch and a fixed head deflection of ½-inch. Also, we assumed a perfectly elastic pile and a cracked section. The modulus of elasticity for the cracked section was estimated to be 1802500 pounds per square inch (i.e. FS = 2).

The main inputs in the LPILE software for each soil layer are the unit weight and soil shear strength. For the selection of p-y curves, the fill was assumed to behave as "sand" with a total unit weight of 98 pcf, effective friction angle of 20 degrees, and no cohesion. A request for modification of building ordinances for deriving lateral support from the existing undocumented fill will be submitted concurrently with this report. The existing native soil below 6 feet was assumed to behave as "sand" with a total unit weight of 125 pcf, an effective friction angle of 33 degrees, and no cohesion. The results of the LPILE analyses are summarized on Figures 6 through 9.

6.3.4 CIDH Pile Construction

We expect the CIDH piles can be drilled using conventional equipment. Caving conditions are not anticipated; however, if it occurs during pile drilling, steel casing shall be used to support the sides of the pile excavations. The inside diameter of the steel casing shall be at least as large as the diameter of the piles. Drilling shall be completed within the casing.

The contractor shall remove loose soil (i.e. slough) from the bottom of the pile excavation. The drilled holes shall be plumb to within a tolerance of 2 percent. Upon completion of drilling, secure covers shall be placed over the excavations. Concrete placement shall be completed within 12 hours of drilling and drilled holes shall not be left open overnight. CIDH pile excavations shall be observed and approved by GEO.

6.4 Pool Shell

The bottom of the pool shall be entirely underlain by at least 12 inches of non-expansive primary structural fill. The pool shall be designed in accordance with the LADBS requirements, as outlined in LADBS Information Bulletin P/BC 2014-014. To mitigate the effects of total and differential settlement beneath the pool, we recommend the pool shell be designed as a rigid unit that will resist cracking.

The pool walls shall be designed to retain the surrounding soil using an equivalent "at-rest" fluid pressure of 75 pounds per cubic foot (pcf). The recommended lateral earth pressure value assumes that the surface of the backfill behind the pool shell is close to horizontal (inclination of 5:1 or flatter). The foregoing lateral earth pressure accounts for the expansive alluvium on the sides of the pool walls.

If surcharge loads (live or dead) are applied, they should be added to the at-rest earth pressure by applying a uniform (rectangular) pressure. The lateral earth pressure coefficient for a uniform vertical surcharge load this is applied behind the pool walls is 0.46 for an at-rest condition.

Based on LADBS requirements, seismically induced pressures are required for retaining walls higher than 6 feet. The seismically induced increment for pool walls higher than 6 feet was estimated using the provisional recommendations by Lew et al. (2010) and the Mononobe-Okabe (M-O) method. The horizontal acceleration used in the (M-O) method, k_h, was assumed to be 1/3 of the PGA_M. The PGA_M at the project site is equal to 0.86g; therefore, k_h, was assumed to be 0.29g. Also, a total unit weight of 125 pcf was assumed for the site soil. The total active pressure during the earthquake, P_{AE}, was calculated to be 63 pcf. The static active and at-rest were calculated to be 31 and 57 pcf, respectively.

According to Lew et al. (2010), if a seismic earth pressure increment is determined using the M-O method, it should be added to the active earth pressure and not to the at-rest pressure. Thus, we subtracted the at-rest pressure (57 pcf) from P_{AE} (63 pcf), which results in a seismically induced increment of 6 pcf. For design purposes, we recommend using a minimum value of 10 pcf. The seismic earth pressure increment should be applied as a triangular pressure distribution and not an inverted triangular distribution

6.5 Non-Structural Foundations

Spread footing foundations are suitable for support of non-structural foundations, including fences, planter walls, and accessory walls less than 8 feet high. All footings shall be embedded at least 18 inches below the lowest adjacent grade. Continuous footings shall have a minimum width of 12 inches and isolated footings shall have a minimum width of 24 inches. Footings may be designed for an allowable bearing capacity of 1,500 pounds per square foot (psf). Bearing values indicated above are for total dead-load and frequently applied live-loads. The above vertical bearing may be increased by one-third for short durations of loading which will include the effect of wind or seismic forces. Lateral load recommendations are provided in Section 6.2.2 of this report.

6.6 Feasibility of Stormwater Infiltration

Based on the results of two infiltration tests (Appendix B) and the guidelines presented in the City of Los Angeles Low Impact Development Best Management Practices Handbook (2011), the project site can be classified as a Category 3 or "Infeasible" for onsite infiltration. GEO is of the opinion that it onsite stormwater infiltration may be feasible within some of the native silty to clayey sand; however, additional testing would be required to confirm this.

6.7 Corrosion and Sulfate Attack Resistance

Chemical analyses including, pH, minimum resistivity, chloride, and sulfate content tests were performed on two samples; a sample of the fat clay alluvium from HSA-1 and the sandy silt alluvium from HSA-2. The results of the tests are presented in Appendix A.

The soil pH ranged from 8.0 to 8.4, the minimum resistivity ranged from 940 to 1200, and the chloride concentration ranged from 90 to 160 ppm. Caltrans (2012) considers a soil to be corrosive if one or more of the following conditions exist:

- Chloride concentration is 500 ppm or greater;
- Sulfate concentration is 2,000 ppm or greater;
- pH is 5.5 or less.

Based on Caltran's (2012) criteria, the onsite native soil is not corrosive when in contact with ferrous metals. According to criteria by other agencies such as NAVFAC, however, the onsite soils may be classified as very to severely corrosive. If desired or required, a corrosion specialist should be consulted regarding selection of construction materials and/or protective design. The results of the sulfate concentration tests indicate that, based on the American Concrete Institute (ACI, 2008) criteria, these soils have negligible sulfate attack potential on concrete. Refer to ACI 318-08 for appropriate concrete mix design.

7.0 SUPPLEMENTAL GEOTECHNICAL SERVICES

7.1 REVIEW OF PLANS AND SPECIFICATIONS

The grading plans and specifications should implement the recommendations presented in this report and should be reviewed by GEO to ensure proper interpretation and application of our recommendations.

7.2 GEOTECHNICAL OBSERVATION AND TESTING DURING CONSTRUCTION

All grading, excavation, and construction of foundations should be performed under the observation and testing of the Geotechnical Engineer at the following stages:

- During demolition and backfill of the existing pool;
- During site and new pool excavation;
- During subgrade preparation;
- During fill placement and compaction;
- During pile drilling and prior to placement of concrete;
- During footing excavation(s) and immediately prior to placement of foundation and/or pool concrete
- During excavation and backfilling of all utility trenches; and
- When any unusual or unexpected geotechnical conditions are encountered.

8.0 CLOSURE

If you have any questions about the contents of this report, please contact Joy Welling at (213) 847-0492.



8-22-17
Joy Welling, EIT 1557786
Civil Engineering Associate I

8-22-17
Easton Forcier, GE 2948
Geotechnical Engineer I

REFERENCES

American Concrete Institute, 2008, Building Code Requirements for Structural Concrete (ACI 318-08) and Commentary, January.

California Deparment of Conservation, Division of Mines and Geology, 1998, Seismic Hazard Evaluation of the San Fernando 7.5-Minute Quadrangle, Los Angeles County.

California Deparment of Conservation, Division of Mines and Geology, 1999, Seismic Hazard Zones Map, San Fernando Quadrangle, March 25 1999.

California Department of Transportation (Caltrans), 2012, Corrosion Guidelines, Version 2.0, November.

City of Los Angeles, Department of Building and Safety, 2014, Design and Construction of Swimming Pools, P/BC 2014-014, January 1.

City of Los Angeles, 2011, Development Best Management Practices Handbook, Low Impact Development Manual, Part B Planning Activities, 4th Edition, June.

County of Los Angeles, Department of Public Works, Geotechnical and Materials Engineering Division, 2014, Administrative Manual, Guidelines for Design, Investigation, and Reporting, Low Impact Development Stormwater Infiltration, GS200.1, December 14.

Dibblee, Thomas W. Jr., 1991, Geologic Map of the San Fernando and Van Nuys (North ½) Quadrangles, Los Angeles County, California, DF-33.

Ensoft Inc., 2013, LPILE for Windows.

Geocon West, Inc., 2017, Geotechnical Data Report, Granada Hills Pool Replacement Project, 16730 Chatsworth Street, Los Angeles, California, TOS 17-074, July 31.

Los Angeles Building Code, 2017.

NavigateLA, City of Los Angeles, http://boemaps.eng.ci.la.ca.us/index01.cfm

FIGURES

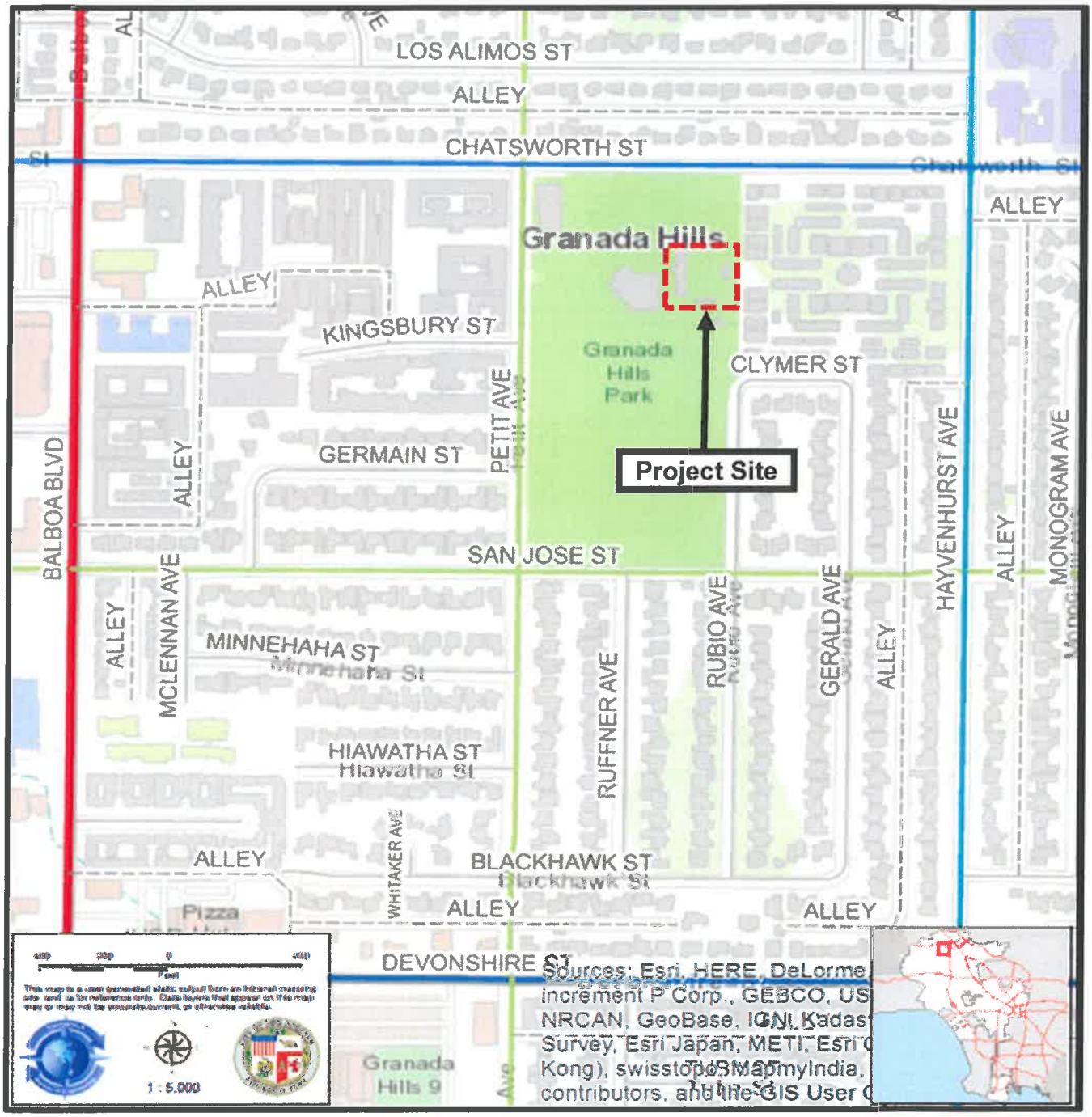

Reference: NavigateLA

VICINITY MAP

N

Granada Hills Pool 16730 Chatsworth Street Los Angeles, CA 91344	BUREAU OF ENGINEERING GEOTECHNICAL ENGINEERING GROUP (GEO) GEO FILE NO.: 17-074 DATE: AUGUST 2017	FIGURE NO. 1

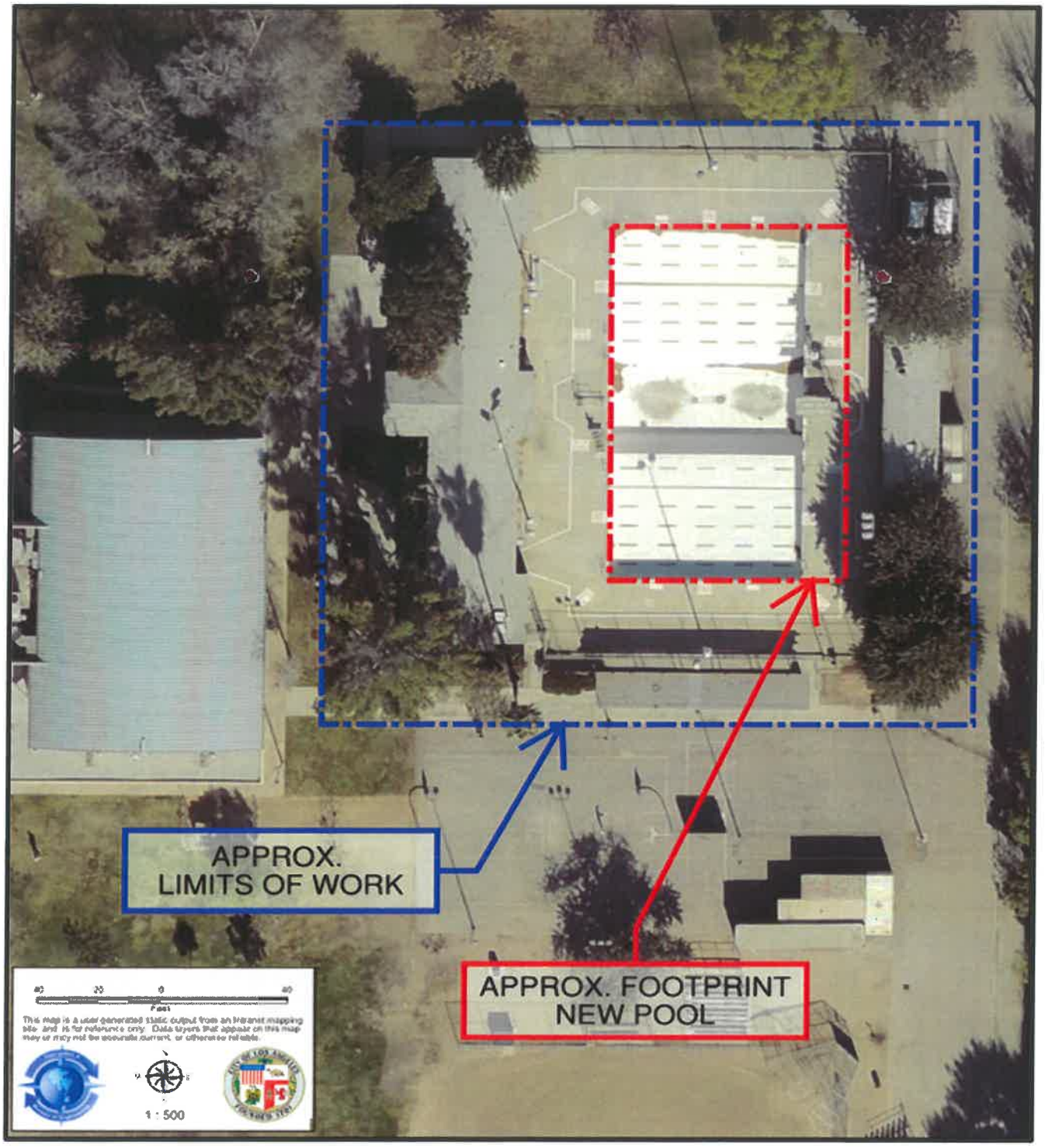

Reference: NavigateLA

SITE PLAN

N

Granada Hills Pool 16730 Chatsworth Street Los Angeles, CA 91344	BUREAU OF ENGINEERING GEOTECHNICAL ENGINEERING GROUP (GEO) GEO FILE NO.: 17-074 DATE: AUGUST 2017	FIGURE NO. 2

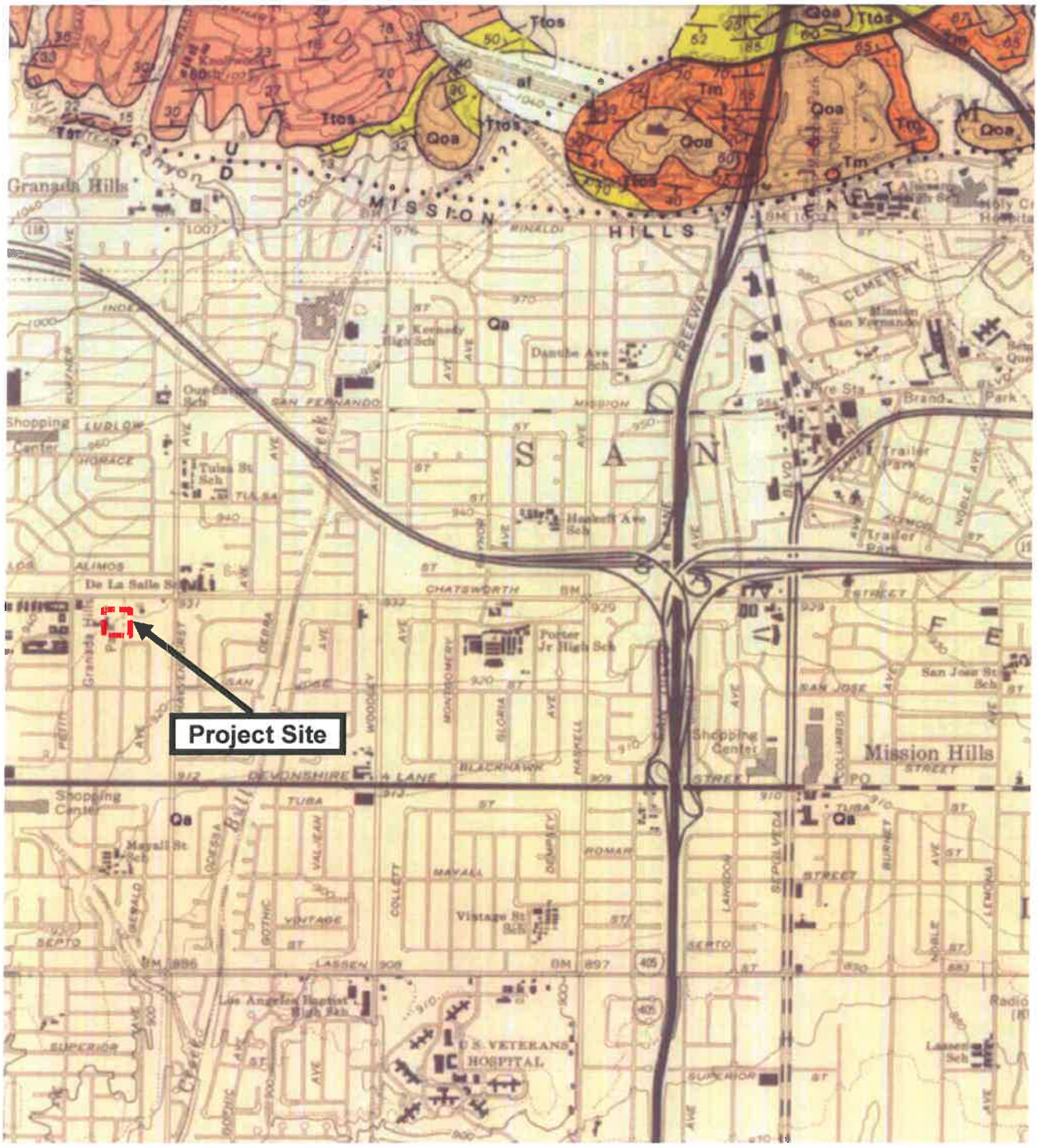

Reference: Geologic Map of the San Fernando and Van Nuys (North 1/2) Quadrangl
Los Angeles County, California, Thomas W. Dibblee, Jr., 1991

N

GEOLOGIC MAP

Granada Hills Pool 16730 Chatsworth Street Los Angeles, CA 91344	BUREAU OF ENGINEERING GEOTECHNICAL ENGINEERING GROUP (GEO) GEO FILE NO.: 17-074 DATE: AUGUST 2017	FIGURE NO. 3

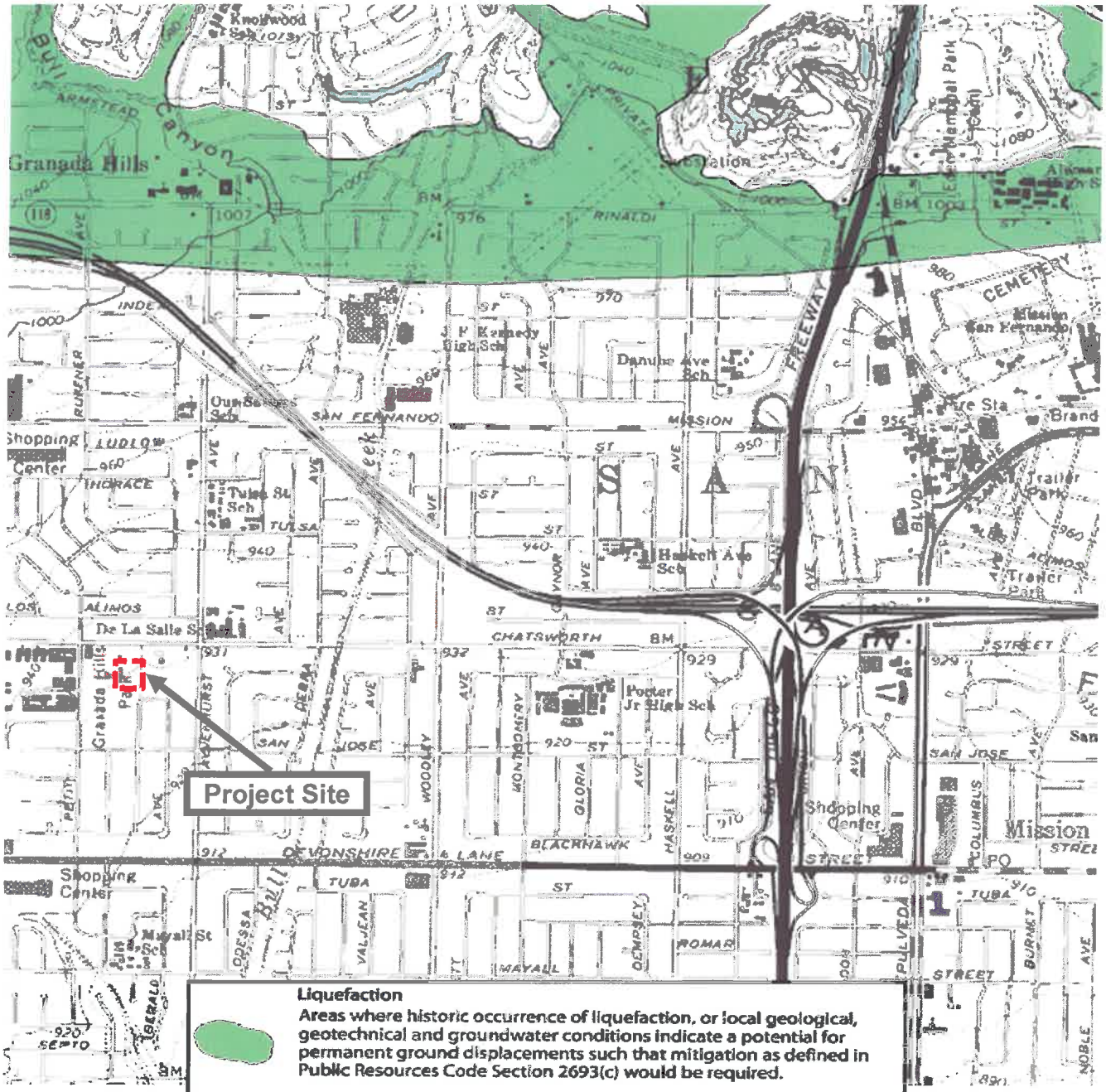

Reference: Seismic Hazard Evaluation of the San Fernando 7.5 minute quadrangle, Los Angeles County, California: California Division of Mines and Geology

N

SEISMIC HAZARD ZONES MAP

Granada Hills Pool 16730 Chatsworth Street Los Angeles, CA 91344	BUREAU OF ENGINEERING GEOTECHNICAL ENGINEERING GROUP (GEO) GEO FILE NO.: 17-074 DATE: AUGUST 2017	FIGURE NO. 4

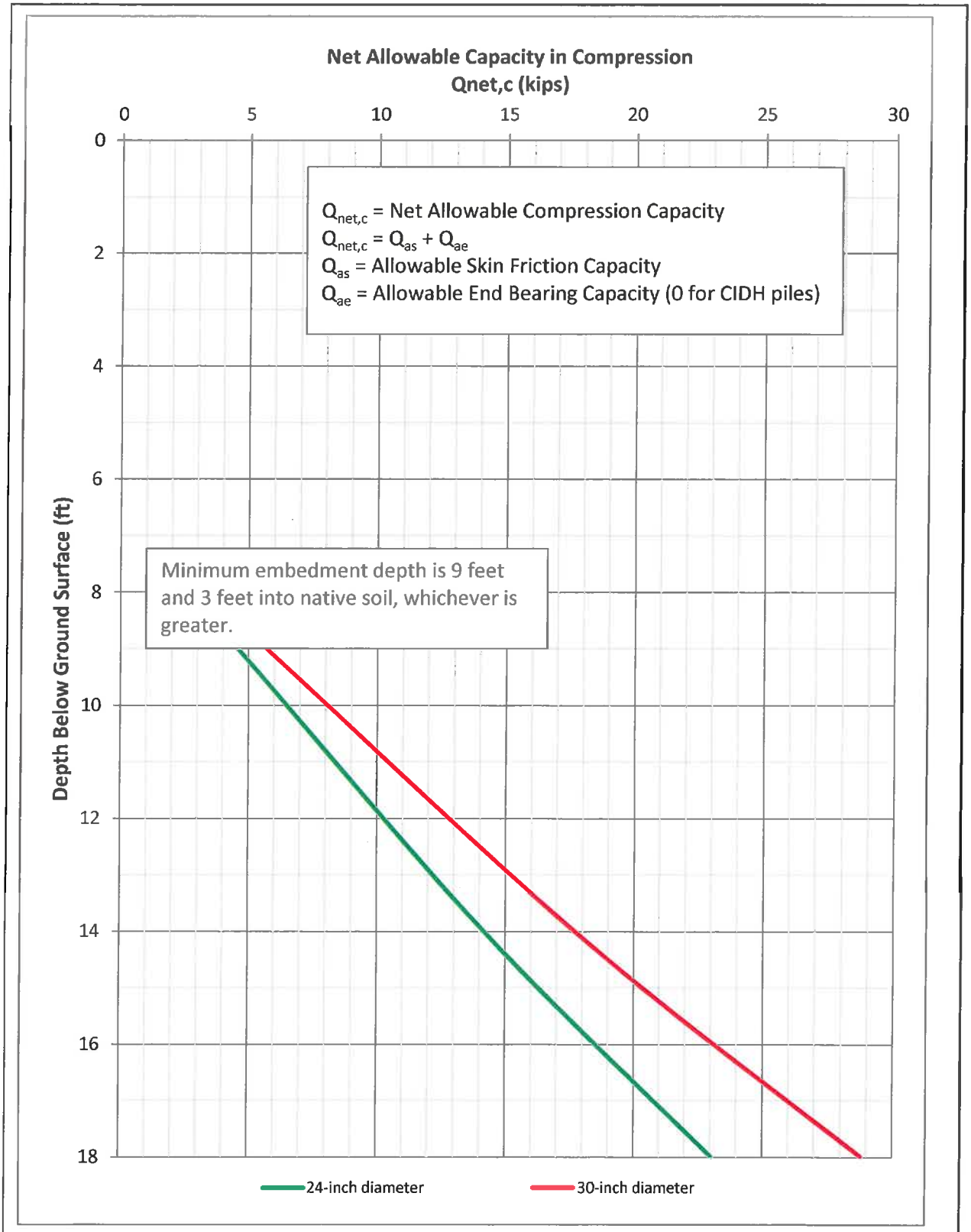

By: ERF	Axial Compression Capacity of Cast-in-Drilled-Hole (CIDH) Piles in Compression Granada Hills Pool Replacement Los Angeles, California	Project No.: 17-074
Date: 8/20/17		Figure **5**
BUREAU OF ENGINEERING - GEOTECHNICAL ENGINEERING GROUP (GEO)		

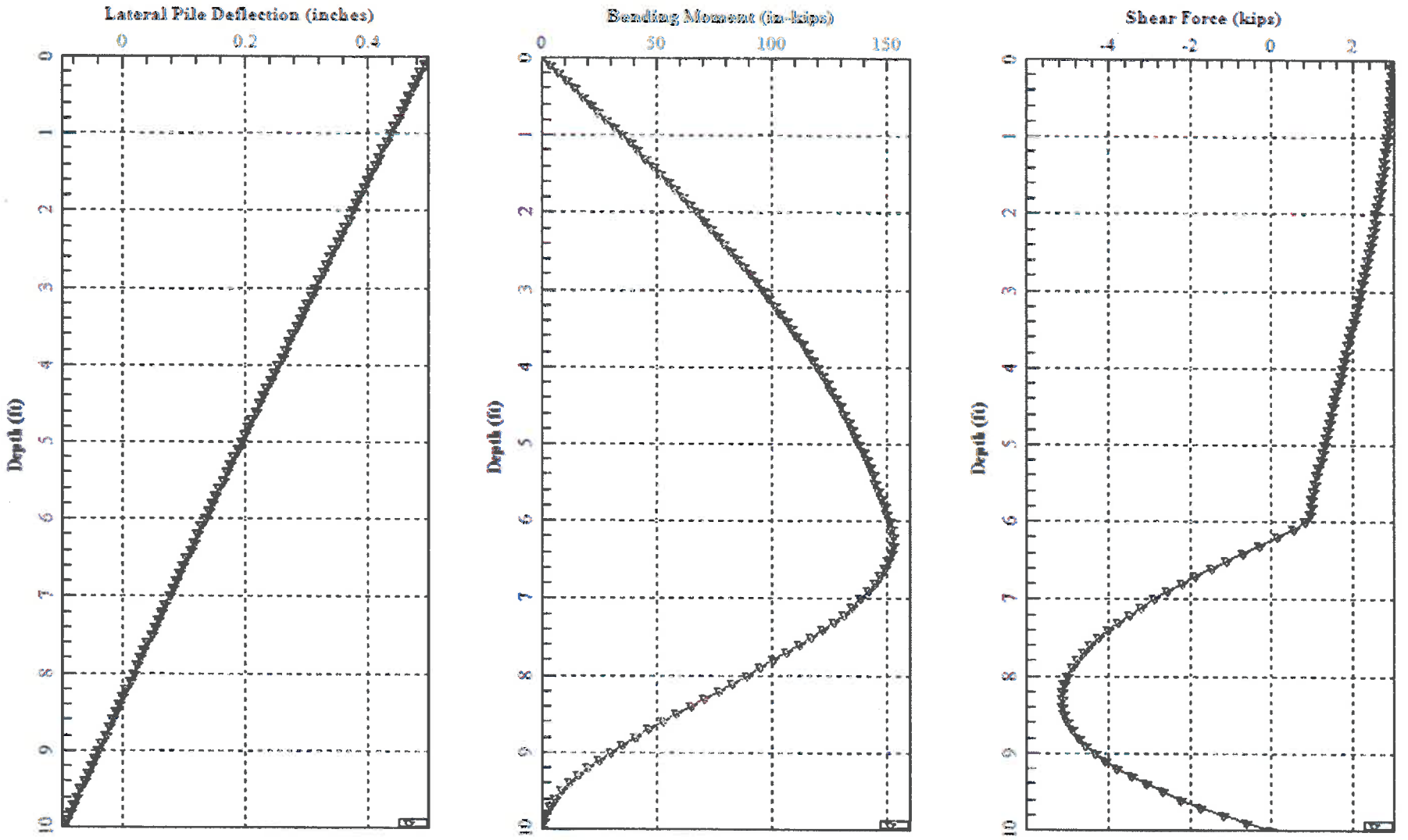

Results of LPILE Analysis for a 24-inch diameter CIDH Pile, Free Head

GRANADA HILLS
POOL REPLACEMENT
16730 CHATSWORTH STREET
LOS ANGELES, CALIFORNIA

BUREAU OF ENGINEERING
GEOTECHNICAL ENGINEERING GROUP (GEO)
GEO FILE No.: 17-074
AUGUST 2017

Figure No. 6

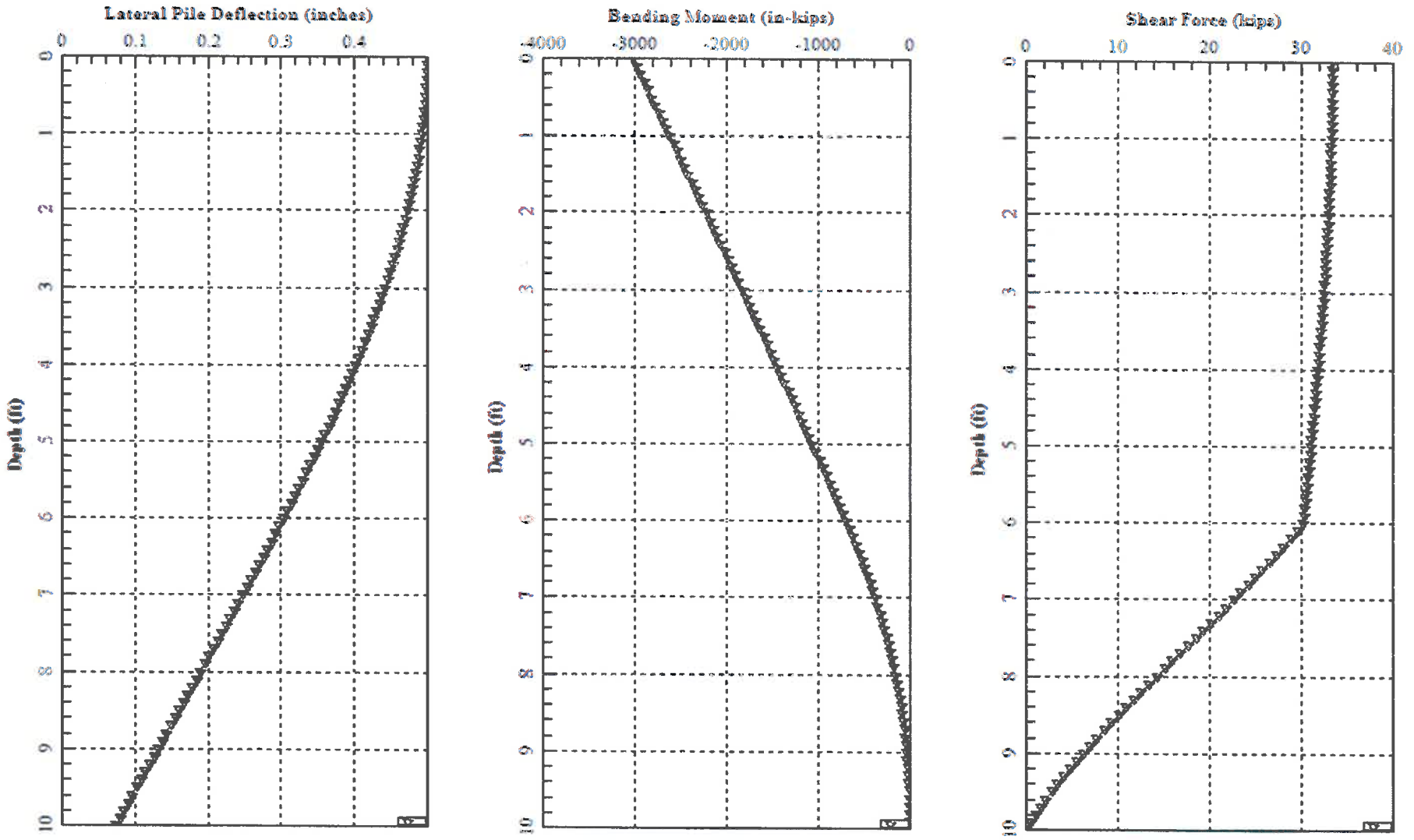

Results of LPILE Analysis for a 24-inch diameter CIDH Pile, Fixed Head

GRANADA HILLS
POOL REPLACEMENT
16730 CHATSWORTH STREET
LOS ANGELES, CALIFORNIA

BUREAU OF ENGINEERING
GEOTECHNICAL ENGINEERING GROUP (GEO)
GEO FILE No.: 17-074
AUGUST 2017

Figure No. 7

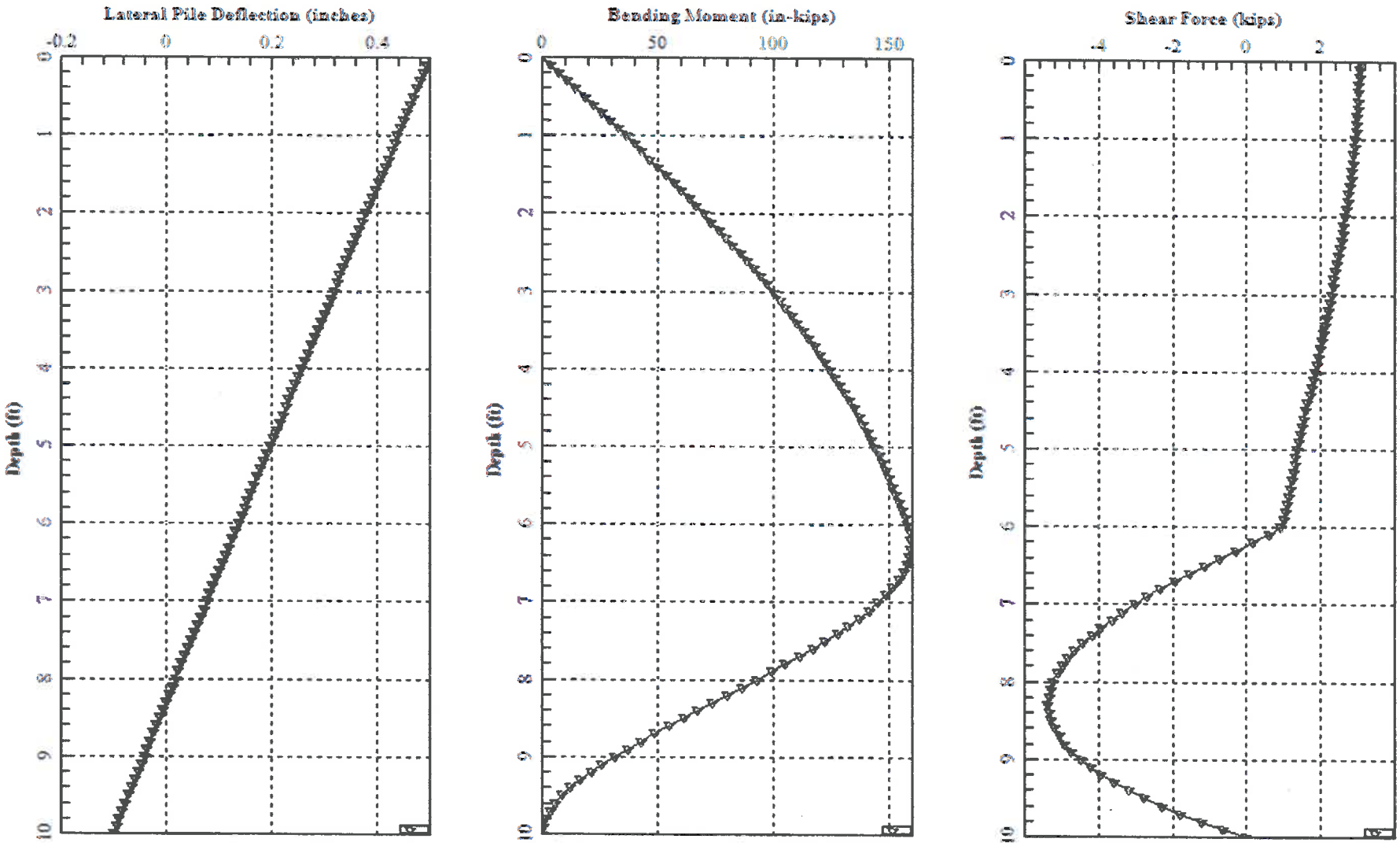

Results of LPILE Analysis for a 30-inch diameter CIDH Pile, Free Head

GRANADA HILLS
POOL REPLACEMENT
16730 CHATSWORTH STREET
LOS ANGELES, CALIFORNIA

BUREAU OF ENGINEERING
GEOTECHNICAL ENGINEERING GROUP (GEO)
GEO FILE No.: 17-074
AUGUST 2017

Figure No. 8

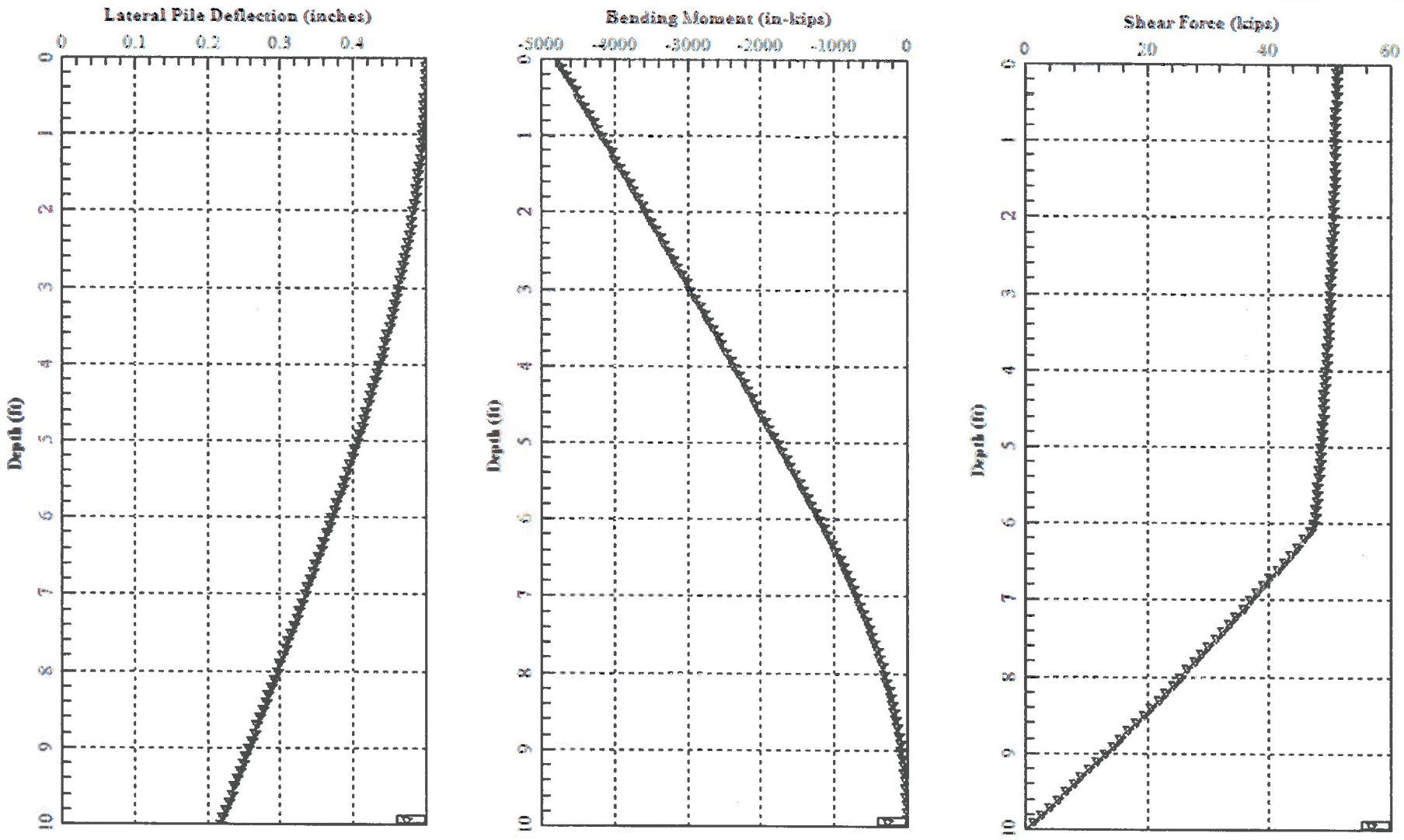

Results of LPILE Analysis for a 30-inch diameter CIDH Pile, Fixed Head

GRANADA HILLS **POOL REPLACEMENT** **16730 CHATSWORTH STREET** LOS ANGELES, CALIFORNIA	BUREAU OF ENGINEERING GEOTECHNICAL ENGINEERING GROUP (GEO) GEO FILE No.: 17-074 AUGUST 2017	Figure No. 9

APPENDIX A

Geotechnical Data Report
Granada Hills Pool Replacement Project
16730 Chatsworth Street
Los Angeles, California
by Geocon West, Inc.
dated July 31, 2017

GEOCON
WEST, INC.

GEOTECHNICAL
ENVIRONMENTAL
MATERIALS

GEOTECHNICAL DATA REPORT

GRANADA HILLS POOL REPLACEMENT PROJECT
16730 CHATSWORTH STREET
LOS ANGELES, CALIFORNIA
W.O. E170517D GEO FILE 17-074
TOS NO. 17-074

PREPARED FOR

CITY OF LOS ANGELES, GEOTECHNICAL ENGINEERING GROUP
LOS ANGELES, CALIFORNIA

PROJECT NO. A8950-06-12

JULY 31, 2017

GEOCON
WEST, INC.
GEOTECHNICAL ■ ENVIRONMENTAL ■ MATERIALS

Project No. A8950-06-12
July 31, 2017

VIA OVERNIGHT COURIER

Mr. Patrick Schmidt
City of Los Angeles, Geotechnical Engineering Group
1149 South Broadway, Suite 120
Los Angeles, California 90015-2213

Subject: GEOTECHNICAL DATA REPORT
GRANADA HILLS POOL REPLACEMENT PROJECT
16730 CHATSWORTH STREET
LOS ANGELES, CALIFORNIA
W.O. E170517D GEO FILE NO. 17-074 TOS NO. 17-074

Dear Mr. Schmidt:

In accordance with your authorization of our proposal dated May 8, 2017, we have prepared this geotechnical data report for the Granada Hills Pool Replacement project in the City of Los Angeles, California. The accompanying report presents information regarding the geotechnical site investigation and laboratory testing programs, and results of the laboratory tests.

If you have any questions regarding this report, or if we may be of further service, please contact the undersigned.

Very truly yours,

GEOCON WEST, INC.

REGISTERED PROFESSIONAL ENGINEER H. HARRY DERKALOUSDIAN C79694 CIVIL STATE OF CALIFORNIA

PROFESSIONAL GEOLOGIST GERALD KASMAN NO. 2251 CERTIFIED ENGINEERING GEOLOGIST STATE OF CALIFORNIA

REGISTERED PROFESSIONAL ENGINEER NEAL D. BERLINER 2576 GEOTECHNICAL STATE OF CALIFORNIA

Harry Derkalousdian
PE 79694

Gerald A. Kasman
CEG 2251

Neal D. Berliner
GE 2576

(Email) Addressee

TABLE OF CONTENTS

1. PURPOSE AND SCOPE 1

2. SUBSURFACE EXPLORATION 1

3. LABORATORY TESTING 1

4. INFILTRATION TESTING 2

MAPS, TABLES, AND ILLUSTRATIONS
- Figure 1, Vicinity Map
- Figure 2, Field Exploration Location Map

APPENDIX A
- FIELD INVESTIGATION
- Figures A1 and A6, Logs of Borings

APPENDIX B
- LABORATORY TESTING
- Figures B1 through B5, Direct Shear Test Results
- Figure B6, Consolidation Test Results
- Figure B7, Grain Size Analysis
- Figure B8, Atterberg Limits
- Figures B9 through B12, Grain Size Distribution
- Figure B13, Laboratory Test Results
- Figure B14, Corrosivity Test Results

GEOTECHNICAL SITE INVESTIGATION

1. PURPOSE AND SCOPE

This geotechnical data report presents information regarding the geotechnical site investigation, laboratory testing programs, and results of the laboratory tests for the Granada Hills Pool Replacement Project located in the City Los Angeles, California (see Vicinity Map, Figure 1). The purpose of the geotechnical site investigation was to evaluate subsurface soil and geologic conditions underlying the site.

The project consists of demolishing the existing swimming pool and constructing a new swimming pool, a new pool deck, a diving platform, shade canopies, and other site improvements.

2. SUBSURFACE EXPLORATION

The scope of our geotechnical site investigation included a site reconnaissance, field exploration, laboratory testing, and the preparation of this data report. The site was explored on June 19, 2017, by excavating six 8-inch diameter borings utilizing a truck mounted hollow-stem auger drilling machine. The borings were excavated to depths between approximately 5 and 31½ feet below the existing ground surface. In addition, percolation testing for the design of a stormwater infiltration system was performed in borings IT-1 and IT-2 on June 20, 2017. The approximate locations of the exploratory borings are depicted on the Field Exploration Location Map (see Figure 2). A detailed discussion of the field investigation, including the boring logs, is presented in Appendix A.

Organic Vapor Analyzer (OVA) readings were obtained at each sample depth during the boring excavation. The OVA readings, which measure volatile organic compounds, are included in the borings logs.

3. LABORATORY TESTING

Laboratory tests were performed on selected undisturbed and remolded samples obtained during the investigation to determine pertinent physical soil properties as directed by the City of Los Angeles, Geotechnical Engineering Group (GEO). The requested testing included the following;

- In-situ Dry Density and Field Moisture (ASTM D2937)
- Atterberg Limits (ASTM D4318)
- Expansion Index (ASTM D4829)
- Grain Size Distribution (ASTM D6913)
- Grain Size Analysis/Fines Content (ASTM D422)
- Direct Shear (ASTM D3080)
- Laboratory Maximum Dry Density and Optimum Moisture Content (ASTM D1557)
- Corrosion Potential (pH, Minimum Resistivity, Sulfate Concentration and Chloride Concentration)

The in-situ dry density and field moisture content were determined from the sample prior to performing other tests whenever possible, and are reported to the nearest 0.1 pounds per cubic foot for the dry density, and 0.1 percent for the moisture content.

Each soil sample for direct shear testing, for both the undisturbed soil samples and remolded sample, was soaked for at least 24 hours prior to performing testing. The samples were tested at varying normal loads while fully submerged in water, with one sample utilized for each normal load.

Appendix B presents a summary of the laboratory test results.

4. INFILTRATION TESTING

During the June 19, 2017 site exploration, borings IT-1 and IT-2 were utilized to perform percolation testing. The borings were advanced to the depths listed in the table below. Slotted casings were placed in the borings, and the annular space between the casing and excavation was filled with filter pack. The borings were then filled with water to pre-saturate the soils. On June 20, 2017, the casings were refilled with water and percolation test readings were performed after repeated flooding of the cased excavations. Based on the test results, the field-measured percolation rate and the design infiltration rate are provided in the following table. The Reduction Factor (Rf), to convert the field-measured percolation rate to an infiltration rate, is also shown in the table below. This value has been calculated in accordance with the Boring Percolation Test Procedure in the County of Los Angeles Department of Public Works GMED Guidelines for Design, Investigation, and Reporting Low Impact Development Stormwater Infiltration (December 2014).

Boring	Infiltration Depth (ft)	Measured Percolation Rate (in / hour)	Reduction Factor (Rf)	Design Infiltration Rate (in / hour)
IT-1	2-5	0.48	10.12	0.05
IT-2	5-10½	1.26	17.51	0.07

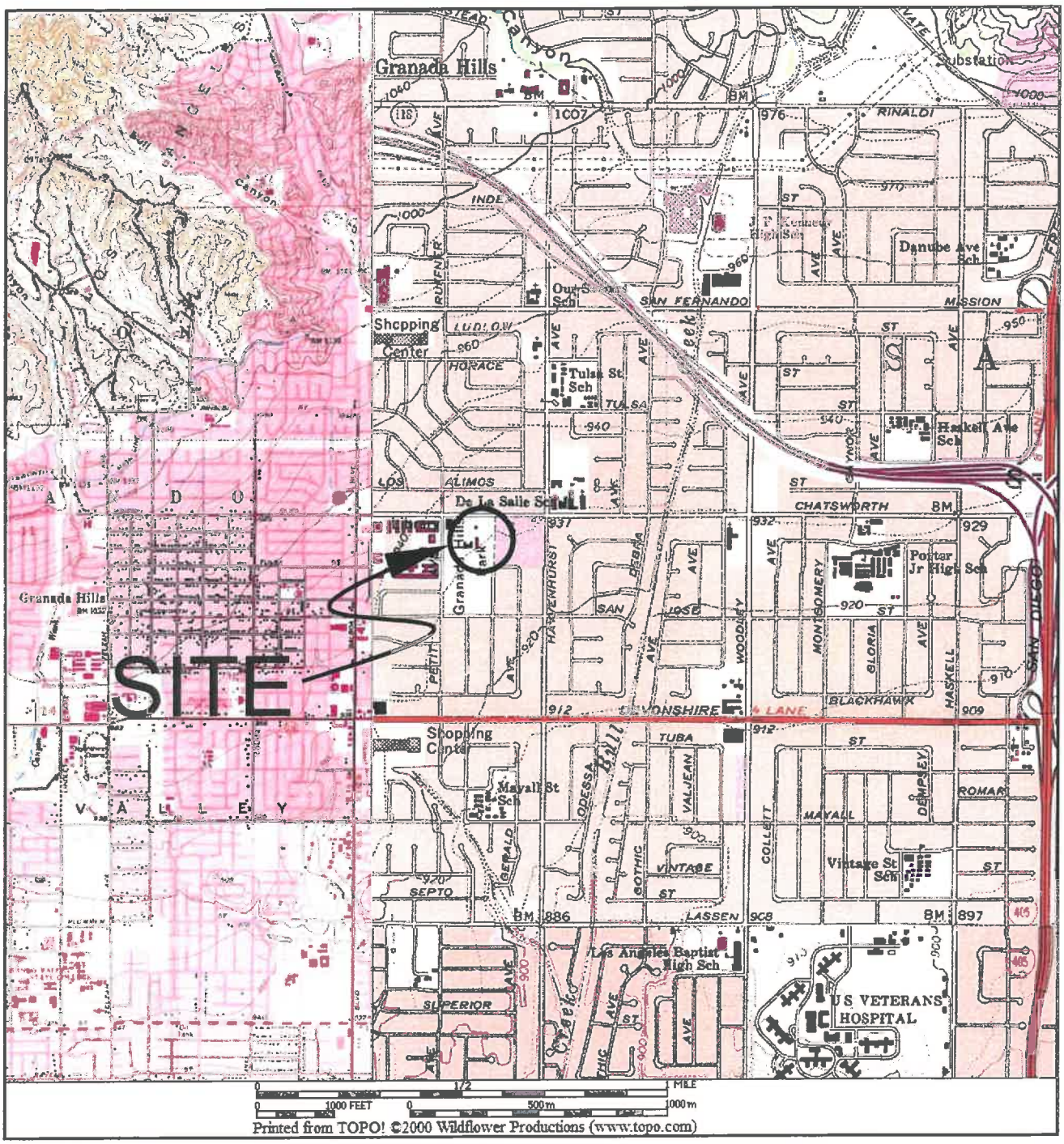

REFERENCE:

U.S.G.S. TOPOGRAPHIC MAPS, 7.5 MINUTE SERIES, OAT MOUNTAIN AND SAN FERNANDO QUADRANGLES, CA QUADRANGLE

GEOCON
WEST, INC.

ENVIRONMENTAL GEOTECHNICAL MATERIALS
3303 N. SAN FERNANDO BLVD. - SUITE 100 - BURBANK, CA 91504
PHONE (818) 841-8388 - FAX (818) 841-1704

DRAFTED BY: SJB	CHECKED BY: HHD

VICINITY MAP

CITY OF LA BUREAU OF ENGINEERING
ALGIN SUTTON RECREATION CENTER
8800 SOUTH HOOVER STREET
LOS ANGELES, CALIFORNIA

JULY 2017	PROJECT NO. A8950-06-19	FIG. 1

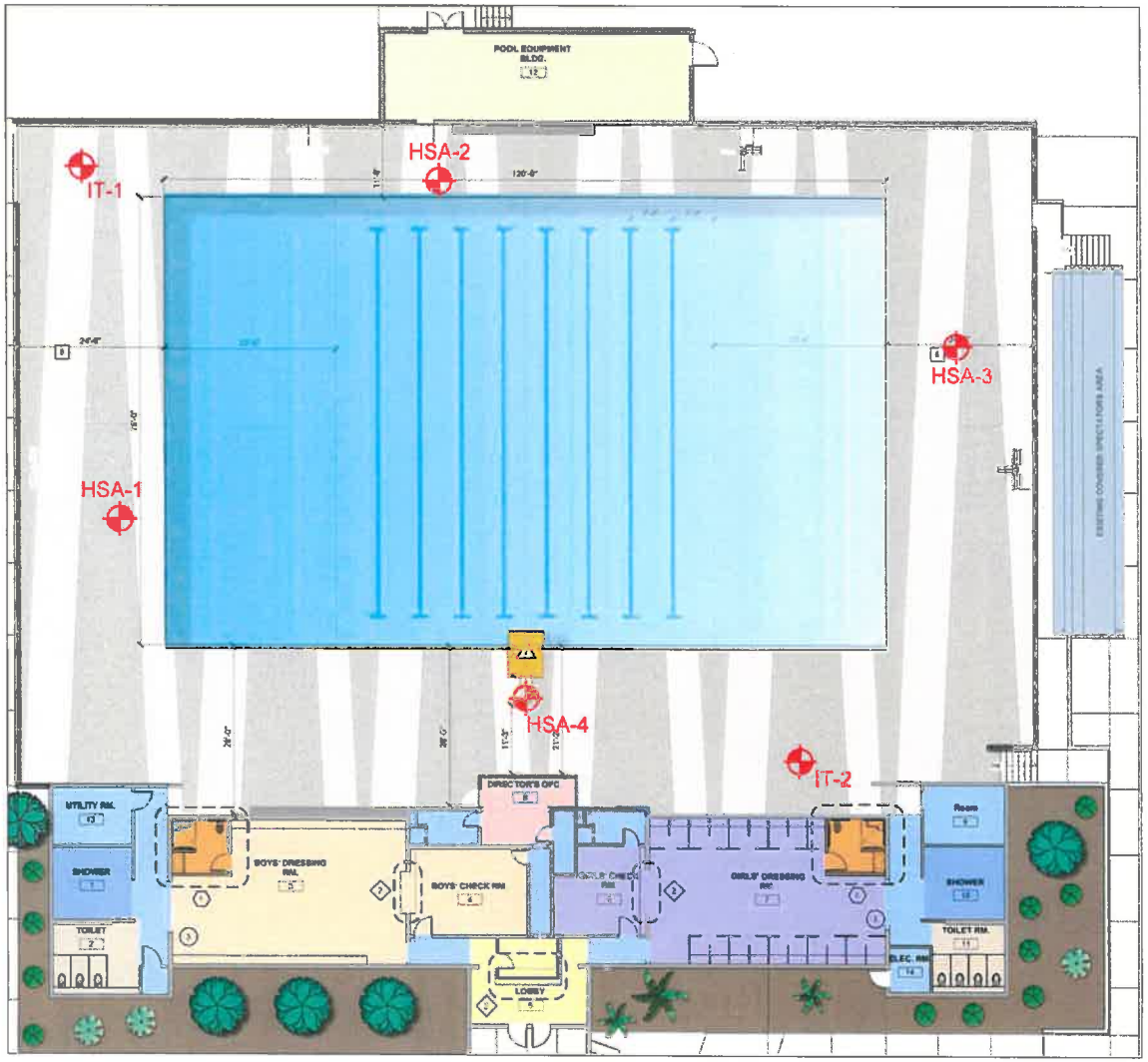

LEGEND

HSA-4 Approximate Location of Hollow Stem Auger Borings

IT-2 Approximate Location of Infiltration Borings

0 20' 40'

GEOCON WEST, INC.
ENVIRONMENTAL GEOTECHNICAL MATERIALS
3303 N. SAN FERNANDO BLVD. - SUITE 100 - BURBANK, CA 91504
PHONE (818) 841-8388 - FAX (818) 841-1704

DRAFTED BY: TL	CHECKED BY: HHD

FIELD EXPLORATION LOCATION MAP

CITY OF LA BUREAU OF ENGINEERING
ALGIN SUTTON RECREATION CENTER
8800 SOUTH HOOVER STREET
LOS ANGELES, CALIFORNIA

JULY 2017	PROJECT NO. A8950-06-12	FIG. 2

APPENDIX A

APPENDIX A

FIELD INVESTIGATION

The site was explored on June 19, 2017, by excavating six 8-inch diameter borings utilizing a truck-mounted hollow-stem auger drilling machine. The borings were excavated to depths between approximately 5 and 31½ feet below the existing ground surface. Representative and relatively undisturbed samples were obtained by driving a 3-inch-O. D., California Modified Sampler into the "undisturbed" soil mass with blows from a 140-pound auto-hammer falling 30 inches. The California Modified Sampler was equipped with 1-inch high by 2⅜-inch diameter brass sampler rings to facilitate removal and testing. Bulk samples of the upper 5 feet of soil from borings were also obtained.

The soils encountered in the borings were visually examined, classified and logged in general accordance with the Unified Soil Classification System (USCS). The boring logs are presented on Figures A1 through A6. The log depicts the soil and geologic conditions encountered and the depth at which samples were obtained. The approximate locations of the borings are shown on the Field Exploration Location Map (see Figure 2).

PROJECT NO. A8950-06-12

BORING HSA-1

ELEV. (MSL.) _____ DATE COMPLETED 6/19/17

EQUIPMENT HOLLOW STEM AUGER BY: SJB

DEPTH IN FEET	SAMPLE NO. / OVA Reading	LITHOLOGY	GROUNDWATER	SOIL CLASS (USCS)	MATERIAL DESCRIPTION	PENETRATION RESISTANCE (BLOWS/FT*)	DRY DENSITY (P.C.F.)	MOISTURE CONTENT (%)
0	BULK 0-5'				**CONCRETE: 5.5"**			
					ARTIFICIAL FILL			
2					Silty Sand, medium dense, slightly moist, brown with dark brown mottles, fine-grained, trace medium-grained.			
					- yellowish brown			
4	@3.5' 36.2 ppm				**ALLUVIUM**	19	102.0	18.7
				CH	Fat Clay with Sand, stiff, slightly moist, dark brown, trace fine-grained sand.			
6	@5.5' 12.8 ppm					18		
8					Sandy Silt, soft, slightly moist, dark brown, fine-grained, trace medium-grained.			
	@8.5' 21.5 ppm				- stiff, brown, some calcium carbonate stringers.	5	85.6	15.7
10	@10.5 7.3 ppm					18		
12					- yellowish brown			
14	@13.5' 3.8 ppm			ML		35	116.8	13.1
					- firm, trace clay			
16	@15.5' 35.7 ppm					11		
18					- no clay			
	@18.5' 5.0 ppm					17	112.5	13.7
20					- trace clay			
	@20.5' 2.0 ppm				- soft to firm	8		
22								
24	@23.5' 2.0 ppm			SM	Silty Sand, medium dense, slightly moist, yellowish brown, fine-grained, trace medium- to coarse-grained.	24	107.1	9.6
26	@25.5'			ML	Sandy Silt, stiff, slightly moist, yellowish brown to brown, fine-grained.	17		
	27.4 ppm				Total depth of boring: 26.5 feet Fill to 3.75 feet. No groundwater encountered. Backfilled with soil cuttings and tamped. Concrete patched.			

A8950-06-12 BORING LOGS.GPJ

Figure A1,
Log of Boring HSA-1, Page 1 of 2

SAMPLE SYMBOLS

- ☐ ... SAMPLING UNSUCCESSFUL
- ◧ ... STANDARD PENETRATION TEST
- ■ ... DRIVE SAMPLE (UNDISTURBED)
- ▨ ... DISTURBED OR BAG SAMPLE
- ◥ ... CHUNK SAMPLE
- ▼ ... WATER TABLE OR SEEPAGE

NOTE: THE LOG OF SUBSURFACE CONDITIONS SHOWN HEREON APPLIES ONLY AT THE SPECIFIC BORING OR TRENCH LOCATION AND AT THE DATE INDICATED. IT IS NOT WARRANTED TO BE REPRESENTATIVE OF SUBSURFACE CONDITIONS AT OTHER LOCATIONS AND TIMES.

GEOCON

PROJECT NO. A8950-06-12

DEPTH IN FEET	SAMPLE NO. / OVA Reading	LITHOLOGY	GROUNDWATER	SOIL CLASS (USCS)	**BORING HSA-1** ELEV. (MSL.) **938.0** DATE COMPLETED **6/19/17** EQUIPMENT **HOLLOW STEM AUGER** BY: **SJB**	PENETRATION RESISTANCE (BLOWS/FT*)	DRY DENSITY (P.C.F.)	MOISTURE CONTENT (%)
					MATERIAL DESCRIPTION			
					*Penetration resistance for 140-pound hammer falling 30 inches by auto-hammer.			

A8950-06-12 BORING LOGS.GPJ

Figure A1,
Log of Boring HSA-1, Page 2 of 2

SAMPLE SYMBOLS			
	☐ ... SAMPLING UNSUCCESSFUL	◧ ... STANDARD PENETRATION TEST	■ ... DRIVE SAMPLE (UNDISTURBED)
	⊠ ... DISTURBED OR BAG SAMPLE	◥ ... CHUNK SAMPLE	▼ ... WATER TABLE OR SEEPAGE

NOTE: THE LOG OF SUBSURFACE CONDITIONS SHOWN HEREON APPLIES ONLY AT THE SPECIFIC BORING OR TRENCH LOCATION AND AT THE DATE INDICATED. IT IS NOT WARRANTED TO BE REPRESENTATIVE OF SUBSURFACE CONDITIONS AT OTHER LOCATIONS AND TIMES.

GEOCON

PROJECT NO. A8950-06-12

BORING HSA-2

ELEV. (MSL.) 938.0 DATE COMPLETED 6/19/17

EQUIPMENT HOLLOW STEM AUGER BY: SJB

DEPTH IN FEET	SAMPLE NO. / OVA Reading	LITHOLOGY	GROUNDWATER	SOIL CLASS (USCS)	MATERIAL DESCRIPTION	PENETRATION RESISTANCE (BLOWS/FT*)	DRY DENSITY (P.C.F.)	MOISTURE CONTENT (%)
0	BULK 0-5'				**CONCRETE: 6"** **ARTIFICIAL FILL** Sand, poorly graded, loose, slightly moist, brown with grayish brown mottles, fine-grained, trace medium- to coarse-grained, some asphalt fragments, trace fine to coarse gravel, trace clay.			
2								
4	@3' 0.8 ppm					6		
6					Silty Sand, loose, slightly moist, brown with grayish brown mottles, fine-grained, some medium- to coarse-grained, some clay, trace gravel (to 1").			
	@6' 0.8 ppm				Sandy Silt, firm, slightly moist, dark brown, fine-grained, some clay and calcium carbonate stringers.	16	116.5	8.4
8	@8' 1.4 ppm			ML		12		
10					Sandy Clay, stiff, slightly moist, yellowish brown, fine-grained, some calcium carbonate stringers.			
	@11' 1.5 ppm					31	115.9	16.1
12				CL				
	@13' 0.9 ppm				- firm, slightly porous, decrease in calcium carbonate stringers	14		
14								
16					Sandy Silt, stiff, slightly moist, yellowish brown, fine-grained.			
	@16' 1.4 ppm					29	106.3	17.8
18	@18' 1.3 ppm			ML	- firm	11		
20					- trace oxidation staining, trace fine- to coarse-grained			
	@21' 1.1 ppm				Silty Sand, loose, slightly moist, yellowish brown, fine-grained, trace medium-grained.	13	105.5	12.8
22	@23' 0.5 ppm			SM		12		
24					- medium dense			
26	@26'			ML	Silt with Sand, stiff, slightly moist, yellowish brown, fine-grained, trace gravel (to 1").	27	112.5	15.7
	0.8 ppm				Total depth of boring: 26.5 feet Fill to 6.25 feet. No groundwater encountered. Backfilled with soil cuttings and tamped. Concrete patched.			

A8950-06-12 BORING LOGS.GPJ

Figure A2,
Log of Boring HSA-2, Page 1 of 2

SAMPLE SYMBOLS

☐ ... SAMPLING UNSUCCESSFUL ◧ ... STANDARD PENETRATION TEST ■ ... DRIVE SAMPLE (UNDISTURBED)

⊠ ... DISTURBED OR BAG SAMPLE ◪ ... CHUNK SAMPLE ▼ ... WATER TABLE OR SEEPAGE

NOTE: THE LOG OF SUBSURFACE CONDITIONS SHOWN HEREON APPLIES ONLY AT THE SPECIFIC BORING OR TRENCH LOCATION AND AT THE DATE INDICATED. IT IS NOT WARRANTED TO BE REPRESENTATIVE OF SUBSURFACE CONDITIONS AT OTHER LOCATIONS AND TIMES.

GEOCON

PROJECT NO. A8950-06-12

DEPTH IN FEET	SAMPLE NO. OVA Reading	LITHOLOGY	GROUNDWATER	SOIL CLASS (USCS)	**BORING HSA-2** ELEV. (MSL.) **938.0** DATE COMPLETED **6/19/17** EQUIPMENT **HOLLOW STEM AUGER** BY: **SJB**	PENETRATION RESISTANCE (BLOWS/FT*)	DRY DENSITY (P.C.F.)	MOISTURE CONTENT (%)
					MATERIAL DESCRIPTION			
					*Penetration resistance for 140-pound hammer falling 30 inches by auto-hammer.			

A8950-06-12 BORING LOGS.GPJ

Figure A2,
Log of Boring HSA-2, Page 2 of 2

SAMPLE SYMBOLS			
	☐ ... SAMPLING UNSUCCESSFUL	◧ ... STANDARD PENETRATION TEST	■ ... DRIVE SAMPLE (UNDISTURBED)
	⊠ ... DISTURBED OR BAG SAMPLE	◥ ... CHUNK SAMPLE	▼ ... WATER TABLE OR SEEPAGE

NOTE: THE LOG OF SUBSURFACE CONDITIONS SHOWN HEREON APPLIES ONLY AT THE SPECIFIC BORING OR TRENCH LOCATION AND AT THE DATE INDICATED. IT IS NOT WARRANTED TO BE REPRESENTATIVE OF SUBSURFACE CONDITIONS AT OTHER LOCATIONS AND TIMES.

PROJECT NO. A8950-06-12

BORING HSA-3

ELEV. (MSL.) 938.0 DATE COMPLETED 6/19/17

EQUIPMENT HOLLOW STEM AUGER BY: SJB

DEPTH IN FEET	SAMPLE NO. / OVA Reading	LITHOLOGY	GROUNDWATER	SOIL CLASS (USCS)	MATERIAL DESCRIPTION	PENETRATION RESISTANCE (BLOWS/FT*)	DRY DENSITY (P.C.F.)	MOISTURE CONTENT (%)
0	BULK 0-5'				**CONCRETE: 7.5" BASE: NONE** **ARTIFICIAL FILL** Silty Sand, very loose, slightly moist, brown with grayish brown mottles, fine-grained, trace medium- to coarse-grained, some clay, trace gravel (to 1"). - some layers of fine-grained sand (light yellowish brown), trace silt and clay (dark brown)			
2								
4	@3' 0.9 ppm					3		
6					Sand, poorly graded, loose, slightly moist, yellowish brown, fine-grained, trace fine gravel.			
	@6' 0.7 ppm					17	104.8	21.4
8	@8' 0.6 ppm			CL	**ALLUVIUM** Clay, firm, slightly moist, dark brown, some clay and calcium carbonate stringers.	13		
10					Silty Sand, medium dense, slightly moist, brown, fine-grained, some calcium carbonate stringers.			
	@11' 0.5 ppm					20	105.3	13.8
12					- yellowish brown, some silty sand interbeds			
14	@13' 0.6 ppm			SM		11		
16	@16' 0.8 ppm				- stiff	24	108.8	17.7
18	@18' 1.1 ppm			ML	Sandy Silt, soft, slightly moist, yellowish brown, fine-grained.	8		
20	@21' 1.7 ppm			ML	Silt with Sand, firm, slightly moist, brown, fine-grained, trace calcium carbonate stringers.	15	108.2	14.9
22					Silty Sand, medium dense, slightly moist, yellowish brown, fine-grained.			
24	@23' 0.5 ppm			SM		13		
26	@26' 0.7 ppm			ML	Sandy Silt, firm, slightly moist, yellowish brown, fine-grained. - trace medium-grained	19	106.7	20.2
					Total depth of boring: 26.5 feet Fill to 6.25 feet. No groundwater encountered. Backfilled with soil cuttings and tamped. Concrete patched.			

A8950-06-12 BORING LOGS.GPJ

Figure A3,
Log of Boring HSA-3, Page 1 of 2

SAMPLE SYMBOLS

- ☐ ... SAMPLING UNSUCCESSFUL
- ◧ ... STANDARD PENETRATION TEST
- ■ ... DRIVE SAMPLE (UNDISTURBED)
- ▨ ... DISTURBED OR BAG SAMPLE
- ◪ ... CHUNK SAMPLE
- ▼ ... WATER TABLE OR SEEPAGE

NOTE: THE LOG OF SUBSURFACE CONDITIONS SHOWN HEREON APPLIES ONLY AT THE SPECIFIC BORING OR TRENCH LOCATION AND AT THE DATE INDICATED. IT IS NOT WARRANTED TO BE REPRESENTATIVE OF SUBSURFACE CONDITIONS AT OTHER LOCATIONS AND TIMES.

GEOCON

PROJECT NO. A8950-06-12

DEPTH IN FEET	SAMPLE NO. OVA Reading	LITHOLOGY	GROUNDWATER	SOIL CLASS (USCS)	**BORING HSA-3** ELEV. (MSL.) **938.0** DATE COMPLETED **6/19/17** EQUIPMENT **HOLLOW STEM AUGER** BY: **SJB**	PENETRATION RESISTANCE (BLOWS/FT*)	DRY DENSITY (P.C.F.)	MOISTURE CONTENT (%)
					MATERIAL DESCRIPTION			
					*Penetration resistance for 140-pound hammer falling 30 inches by auto-hammer.			

A8950-06-12 BORING LOGS.GPJ

Figure A3,
Log of Boring HSA-3, Page 2 of 2

SAMPLE SYMBOLS			
	☐ ... SAMPLING UNSUCCESSFUL	◧ ... STANDARD PENETRATION TEST	■ ... DRIVE SAMPLE (UNDISTURBED)
	▨ ... DISTURBED OR BAG SAMPLE	◥ ... CHUNK SAMPLE	▼ ... WATER TABLE OR SEEPAGE

NOTE: THE LOG OF SUBSURFACE CONDITIONS SHOWN HEREON APPLIES ONLY AT THE SPECIFIC BORING OR TRENCH LOCATION AND AT THE DATE INDICATED. IT IS NOT WARRANTED TO BE REPRESENTATIVE OF SUBSURFACE CONDITIONS AT OTHER LOCATIONS AND TIMES.

GEOCON

PROJECT NO. A8950-06-12

BORING HSA-4

ELEV. (MSL.) 938.0 DATE COMPLETED 6/19/17

EQUIPMENT HOLLOW STEM AUGER BY: SJB

DEPTH IN FEET	SAMPLE NO. / OVA Reading	LITHOLOGY	GROUNDWATER	SOIL CLASS (USCS)	MATERIAL DESCRIPTION	PENETRATION RESISTANCE (BLOWS/FT*)	DRY DENSITY (P.C.F.)	MOISTURE CONTENT (%)
0	BULK 0-5'				**CONCRETE: 6" BASE: NONE**			
					ARTIFICIAL FILL			
2					Sandy Silt, soft, slightly moist, brown with dark brown mottles, fine- to medium-grained, trace clay and rootlets (to 3mm).			
					- plastic debris, brick fragments (to 2")			
					- brick fragments, concrete fragments (to 2")			
4	@3.5' 1.5 ppm				Silty Sand, loose, slightly moist, brown, fine- to medium-grained.	11	108.8	13.5
					ALLUVIUM			
6	@5.5' 0.8 ppm			CL	Clay, firm, moist, dark brown, some clay and calcium carbonate stringers.	9		
8	@8.5'				- brown	18	105.6	21.6
10	0.8 ppm @10.5'			SM	Silty Sand, loose, slightly moist, yellowish brown, fine-grained, calcium carbonate stringers.	4		
12	2.0 ppm				- medium dense, some medium- to coarse-grained			
14	@13.5'					37	119.1	5.8
16	1.0 ppm @15.5' 4.1 ppm			SP	Sand, poorly graded, medium dense, slightly moist, light yellowish brown, fine-grained, trace coarse-grained, 2" gravel lens (to 3").	19		
18					Silt with Sand, stiff, slightly moist, yellowish brown, fine-grained, trace calcium carbonate stringers and nodules.			
	@18.5'				- soft	25	113.6	16.2
20	0.8 ppm @20.5'			ML		10		
22	2.0 ppm							
24	@23.5' 0.9 ppm			ML/SM	Sandy Silt to Silty Sand, stiff to medium dense, sightly moist, yellowish brown, fine-grained, trace medium- to coarse-grained.	31	111.5	7.2
26	@25.5' 0.7 ppm			ML	Silt with Sand, firm, slightly moist, yellowish brown, fine-grained, trace calcium carbonate nodules.	11		
28	@28' 27.4 ppm					7		

A8950-06-12 BORING LOGS.GPJ

Figure A4,
Log of Boring HSA-4, Page 1 of 2

SAMPLE SYMBOLS

- ☐ ... SAMPLING UNSUCCESSFUL
- ▨ ... DISTURBED OR BAG SAMPLE
- ◧ ... STANDARD PENETRATION TEST
- ◪ ... CHUNK SAMPLE
- ■ ... DRIVE SAMPLE (UNDISTURBED)
- ▼ ... WATER TABLE OR SEEPAGE

NOTE: THE LOG OF SUBSURFACE CONDITIONS SHOWN HEREON APPLIES ONLY AT THE SPECIFIC BORING OR TRENCH LOCATION AND AT THE DATE INDICATED. IT IS NOT WARRANTED TO BE REPRESENTATIVE OF SUBSURFACE CONDITIONS AT OTHER LOCATIONS AND TIMES.

GEOCON

PROJECT NO. A8950-06-12

DEPTH IN FEET	SAMPLE NO. OVA Reading	LITHOLOGY	GROUNDWATER	SOIL CLASS (USCS)	**BORING HSA-4** ELEV. (MSL.) **938.0** DATE COMPLETED **6/19/17** EQUIPMENT **HOLLOW STEM AUGER** BY: **SJB**	PENETRATION RESISTANCE (BLOWS/FT*)	DRY DENSITY (P.C.F.)	MOISTURE CONTENT (%)
					MATERIAL DESCRIPTION			
30	@30.5'			ML	Sandy Silt, firm, slightly moist, yellowish brown, fine-grained, trace medium-grained, trace calcium carbonate nodules.	11		
	28.0 ppm				Total depth of boring: 31.5 feet Fill to 5 feet. No groundwater encountered. Backfilled with soil cuttings and tamped. Concrete patched. *Penetration resistance for 10.9 ppm d hammer falling 30 inches by auto-hammer.			

A8950-06-12 BORING LOGS.GPJ

Figure A4,
Log of Boring HSA-4, Page 2 of 2

SAMPLE SYMBOLS

- ☐ ... SAMPLING UNSUCCESSFUL
- ▨ ... DISTURBED OR BAG SAMPLE
- ◧ ... STANDARD PENETRATION TEST
- ◥ ... CHUNK SAMPLE
- ■ ... DRIVE SAMPLE (UNDISTURBED)
- ▼ ... WATER TABLE OR SEEPAGE

NOTE: THE LOG OF SUBSURFACE CONDITIONS SHOWN HEREON APPLIES ONLY AT THE SPECIFIC BORING OR TRENCH LOCATION AND AT THE DATE INDICATED. IT IS NOT WARRANTED TO BE REPRESENTATIVE OF SUBSURFACE CONDITIONS AT OTHER LOCATIONS AND TIMES.

GEOCON

PROJECT NO. A8950-06-12

DEPTH IN FEET	SAMPLE NO. / OVA Reading	LITHOLOGY	GROUNDWATER	SOIL CLASS (USCS)	**BORING IT-1** ELEV. (MSL.) **938.0** DATE COMPLETED **6/19/17** EQUIPMENT **HOLLOW STEM AUGER** BY: **SJB**	PENETRATION RESISTANCE (BLOWS/FT*)	DRY DENSITY (P.C.F.)	MOISTURE CONTENT (%)
					MATERIAL DESCRIPTION			
0	BULK 0-5'				**CONCRETE: 5.5" BASE: NONE** **ARTIFICIAL FILL** Silty Sand, medium dense, slightly moist, brown with dark brown mottles, fine-grained, trace medium- to coarse-grained, trace clay, trace coarse gravel (to 2").			
2								
4					Silt, firm, slightly moist, brown with dark brown mottles, some clay and sand.			
					Total depth of boring: 5 feet All fill. No groundwater encountered. Percolation testing performed. Backfilled with soil cuttings and tamped. Concrete patched.			

A8950-06-12 BORING LOGS.GPJ

Figure A5,
Log of Boring IT-1, Page 1 of 1

SAMPLE SYMBOLS

- ☐ ... SAMPLING UNSUCCESSFUL
- ▨ ... DISTURBED OR BAG SAMPLE
- ◧ ... STANDARD PENETRATION TEST
- ◥ ... CHUNK SAMPLE
- ■ ... DRIVE SAMPLE (UNDISTURBED)
- ▼ ... WATER TABLE OR SEEPAGE

NOTE: THE LOG OF SUBSURFACE CONDITIONS SHOWN HEREON APPLIES ONLY AT THE SPECIFIC BORING OR TRENCH LOCATION AND AT THE DATE INDICATED. IT IS NOT WARRANTED TO BE REPRESENTATIVE OF SUBSURFACE CONDITIONS AT OTHER LOCATIONS AND TIMES.

GEOCON

PROJECT NO. A8950-06-12

BORING IT-2

ELEV. (MSL.) 938.0 DATE COMPLETED 6/19/17

EQUIPMENT HOLLOW STEM AUGER BY: SJB

DEPTH IN FEET	SAMPLE NO. / OVA Reading	LITHOLOGY	GROUNDWATER	SOIL CLASS (USCS)	MATERIAL DESCRIPTION	PENETRATION RESISTANCE (BLOWS/FT*)	DRY DENSITY (P.C.F.)	MOISTURE CONTENT (%)
0	BULK 0-5'				**CONCRETE: 6"**			
					ARTIFICIAL FILL			
2					Silty Sand, loose, slightly moist, brown with grayish brown mottles, fine-grained, trace clay, trace medium- to coarse-grained, trace gravel.			
4								
6					**ALLUVIUM** Silt, firm, slightly moist, dark brown, some clay, trace sand.			
8				ML	- yellowish brown, trace fine-grained sand and fine gravel (to 1").			
10					Total depth of boring: 10.5 feet Fill to 5 feet. No groundwater encountered. Backfilled with soil cuttings and tamped. Concrete patched.			

A8950-06-12 BORING LOGS.GPJ

Figure A6,
Log of Boring IT-2, Page 1 of 1

SAMPLE SYMBOLS

☐ ... SAMPLING UNSUCCESSFUL ◧ ... STANDARD PENETRATION TEST ■ ... DRIVE SAMPLE (UNDISTURBED)

▨ ... DISTURBED OR BAG SAMPLE ◥ ... CHUNK SAMPLE ▼ ... WATER TABLE OR SEEPAGE

NOTE: THE LOG OF SUBSURFACE CONDITIONS SHOWN HEREON APPLIES ONLY AT THE SPECIFIC BORING OR TRENCH LOCATION AND AT THE DATE INDICATED. IT IS NOT WARRANTED TO BE REPRESENTATIVE OF SUBSURFACE CONDITIONS AT OTHER LOCATIONS AND TIMES.

GEOCON

APPENDIX B

APPENDIX B

LABORATORY TESTING

Laboratory tests were performed in accordance with generally accepted test methods of the "American Society for Testing and Materials (ASTM)", or other suggested procedures. Selected samples were tested for direct shear, consolidation, expansion potential, Atterberg limits, fines content, grain size distribution, corrosivity, in-place dry density and moisture content, and maximum dry density and optimum moisture content. The results of the laboratory tests are summarized in Figures B1 through B14. The in-place dry density and moisture content of the samples tested are presented in the boring logs, Appendix A.

SAMPLE	SOIL TYPE	DRY DENSITY	INITIAL MOISTURE (%)	FINAL MOISTURE (%)
HSA2 @ 11'	CL SANDY CLAY	115.9	16.1	18.7

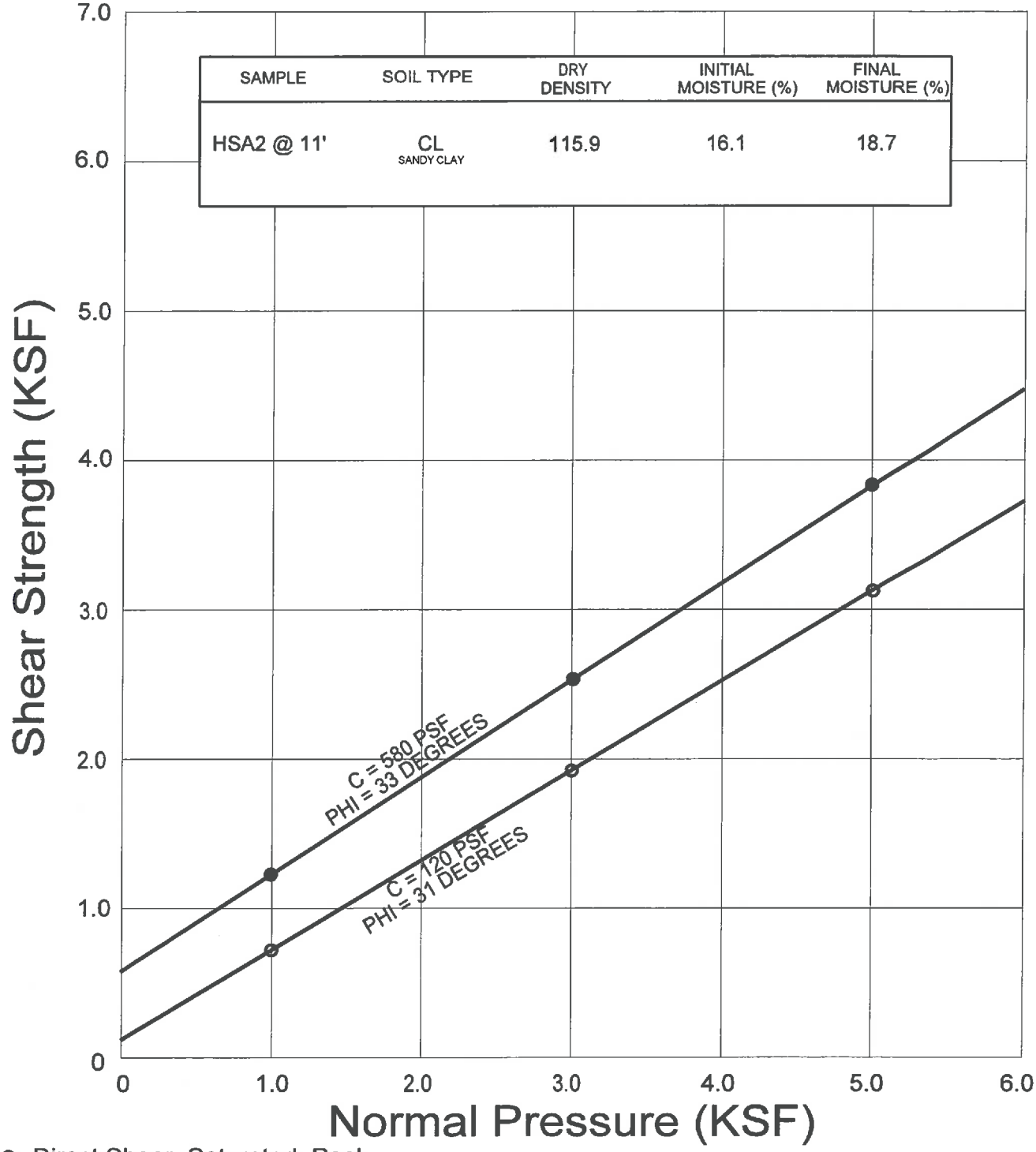

GEOCON WEST, INC.

ENVIRONMENTAL GEOTECHNICAL MATERIALS
3303 N. SAN FERNANDO BLVD. - SUITE 100 - BURBANK, CA 91504
PHONE (818) 841-8388 - FAX (818) 841-1704

DRAFTED BY: TL	CHECKED BY: HHD

DIRECT SHEAR TEST RESULTS

CITY OF LA BUREAU OF ENGINEERING
GRANADA HILLS POOL REPLACEMENT
16730 CHATSWORTH STREET
LOS ANGELES, CALIFORNIA

JULY 2017	PROJECT NO. A8950-06-12	FIG. B1

SAMPLE	SOIL TYPE	DRY DENSITY	INITIAL MOISTURE (%)	FINAL MOISTURE (%)
HSA3 @ 6'	CL CLAY	104.8	21.4	23.7

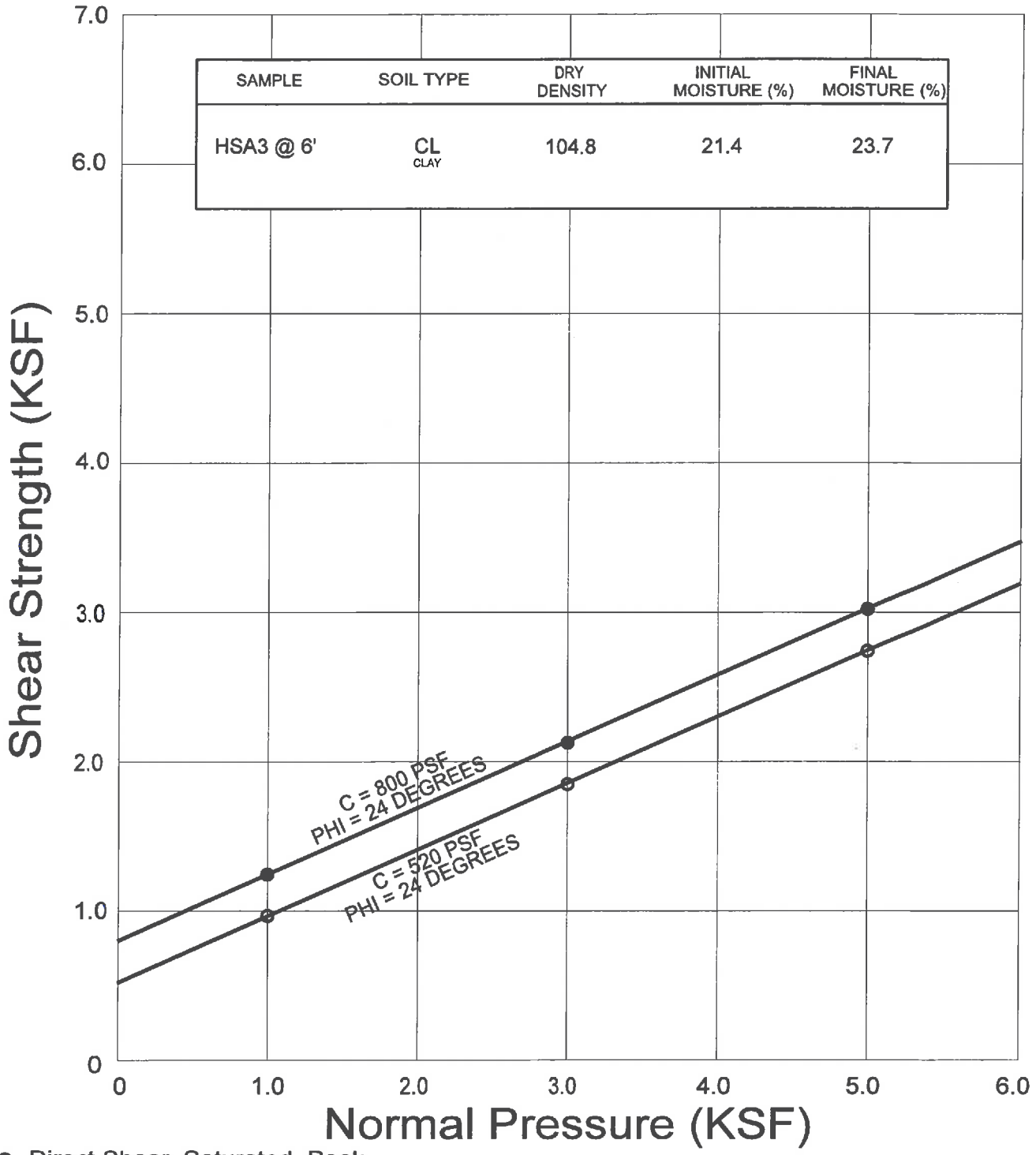

GEOCON
W E S T, I N C.

ENVIRONMENTAL GEOTECHNICAL MATERIALS
3303 N. SAN FERNANDO BLVD. - SUITE 100 - BURBANK, CA 91504
PHONE (818) 841-8388 - FAX (818) 841-1704

DRAFTED BY: TL | CHECKED BY: HHD

DIRECT SHEAR TEST RESULTS

CITY OF LA BUREAU OF ENGINEERING
GRANADA HILLS POOL REPLACEMENT
16730 CHATSWORTH STREET
LOS ANGELES, CALIFORNIA

JULY 2017 | PROJECT NO. A8950-06-12 | FIG. B2

SAMPLE	SOIL TYPE	DRY DENSITY	INITIAL MOISTURE (%)	FINAL MOISTURE (%)
HSA4 @ 8.5'	CL CLAY	105.6	21.6	24.0

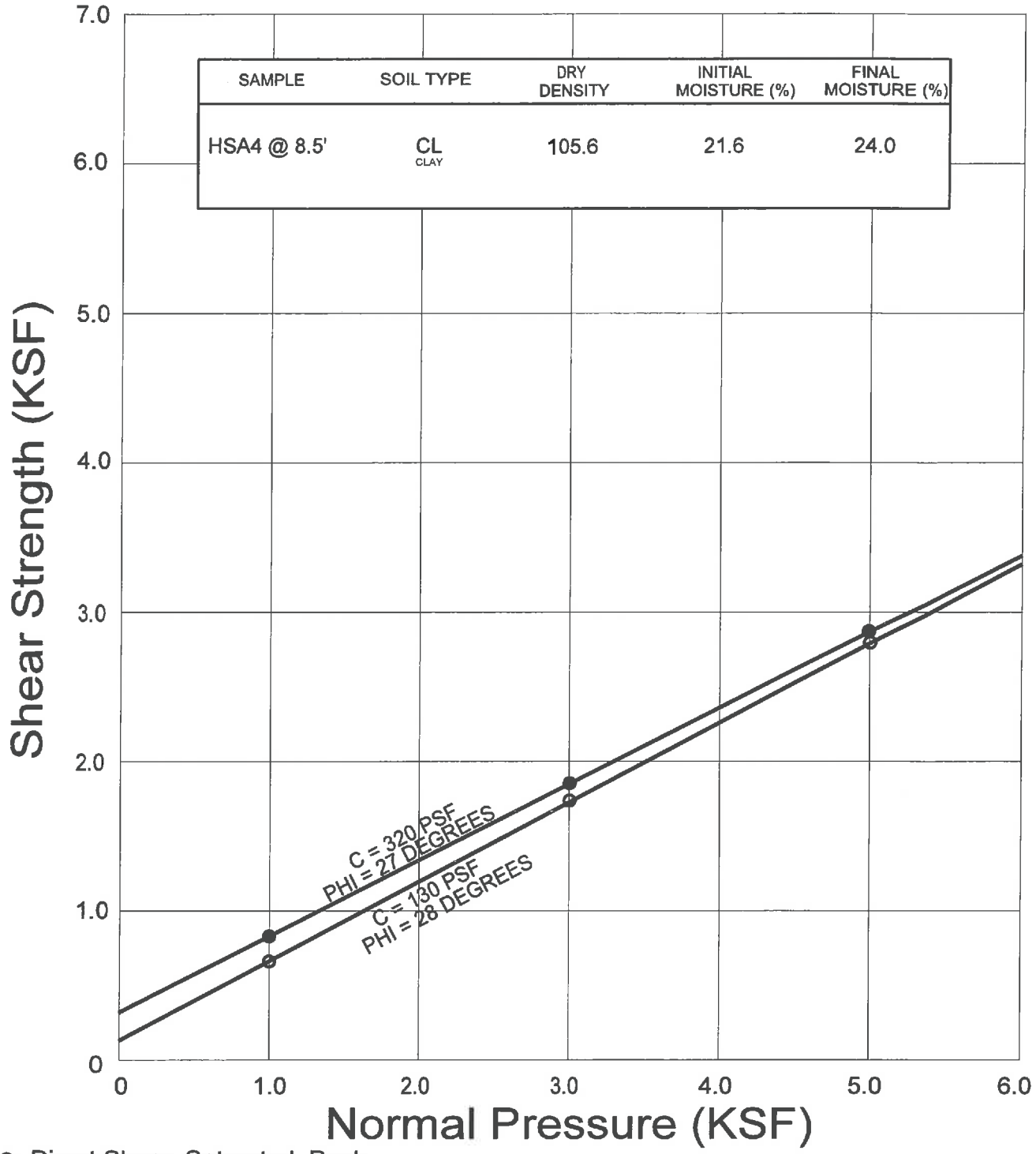

● Direct Shear, Saturated, Peak

o Direct Shear, Saturated, Ultimate

GEOCON WEST, INC.

ENVIRONMENTAL GEOTECHNICAL MATERIALS
3303 N. SAN FERNANDO BLVD. - SUITE 100 - BURBANK, CA 91504
PHONE (818) 841-8388 - FAX (818) 841-1704

DRAFTED BY: TL	CHECKED BY: HHD

DIRECT SHEAR TEST RESULTS

CITY OF LA BUREAU OF ENGINEERING
GRANADA HILLS POOL REPLACEMENT
16730 CHATSWORTH STREET
LOS ANGELES, CALIFORNIA

JULY 2017	PROJECT NO. A8950-06-12	FIG. B3

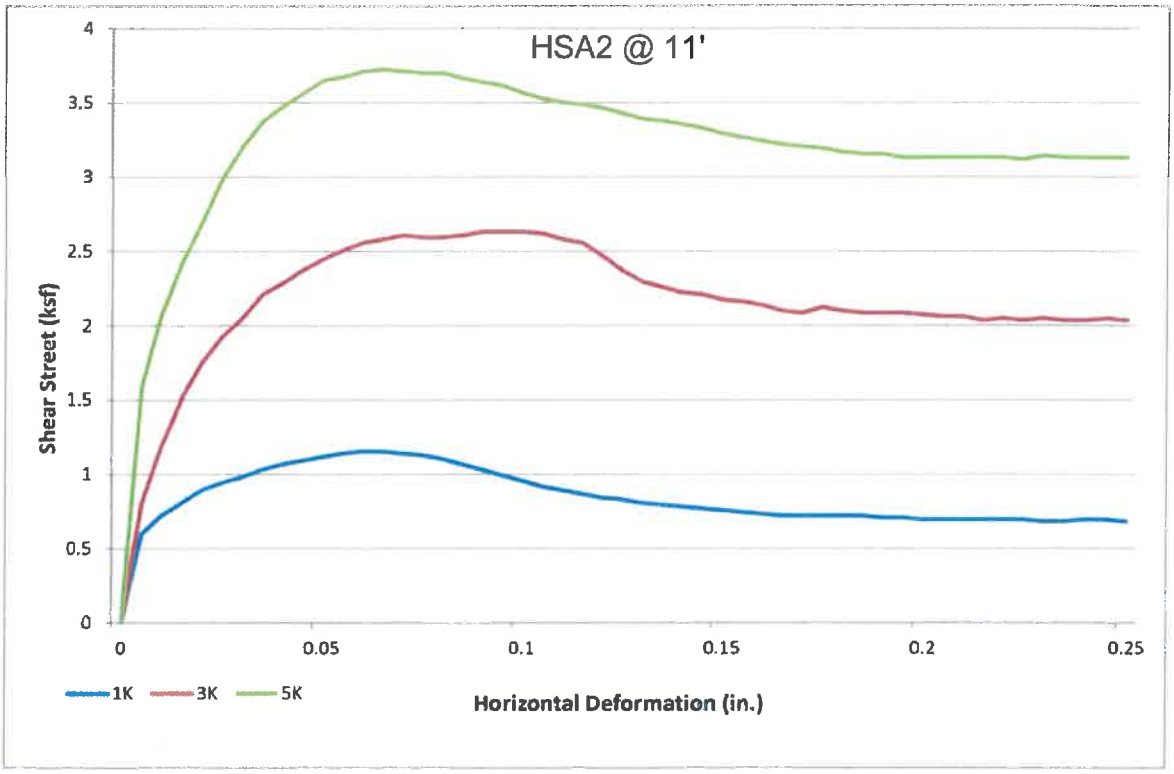

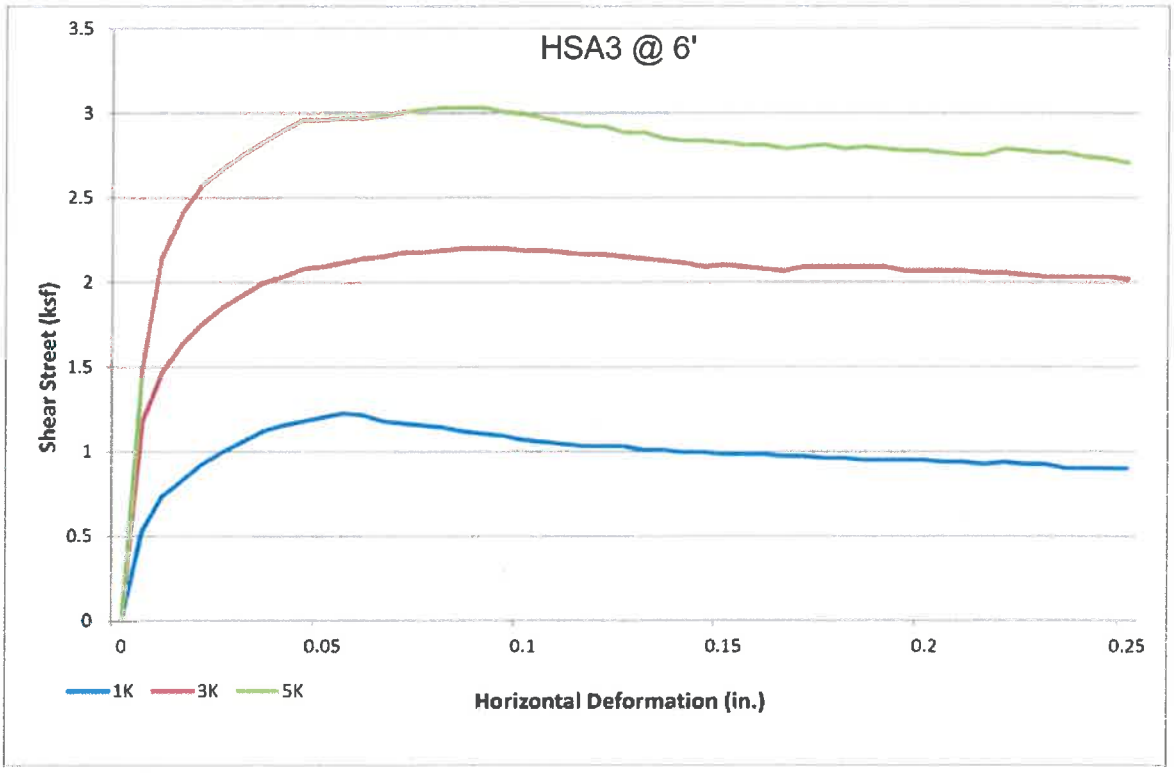

GEOCON
WEST, INC.

ENVIRONMENTAL GEOTECHNICAL MATERIALS
3303 N. SAN FERNANDO BLVD. - SUITE 100 - BURBANK, CA 91504
PHONE (818) 841-8388 - FAX (818) 841-1704

DRAFTED BY: TL	CHECKED BY: HHD

DIRECT SHEAR TEST RESULTS

CITY OF LA BUREAU OF ENGINEERING
GRANADA HILLS POOL REPLACEMENT
16730 CHATSWORTH STREET
LOS ANGELES, CALIFORNIA

JULY 2017	PROJECT NO. A8950-06-12	FIG. B4

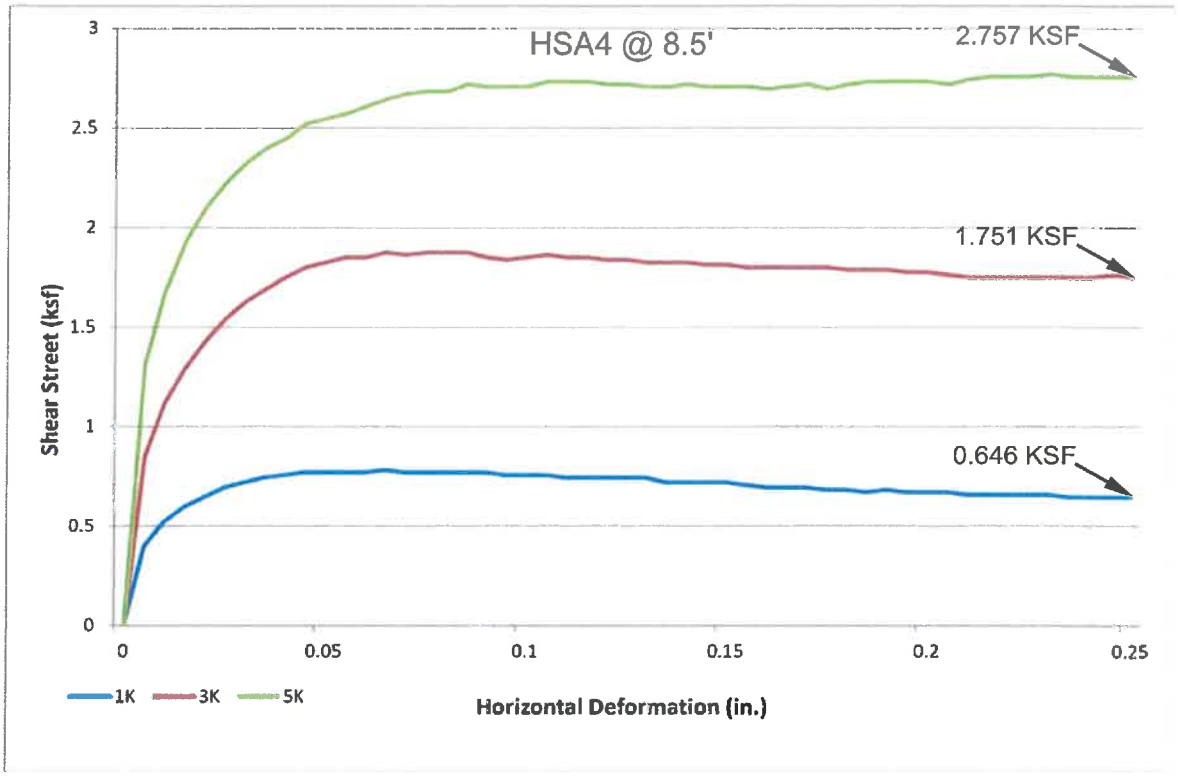

GEOCON
W E S T, I N C.

ENVIRONMENTAL GEOTECHNICAL MATERIALS
3303 N. SAN FERNANDO BLVD. - SUITE 100 - BURBANK, CA 91504
PHONE (818) 841-8388 - FAX (818) 841-1704

DRAFTED BY: TL	CHECKED BY: HHD

DIRECT SHEAR TEST RESULTS

CITY OF LA BUREAU OF ENGINEERING
GRANADA HILLS POOL REPLACEMENT
16730 CHATSWORTH STREET
LOS ANGELES, CALIFORNIA

JULY 2017	PROJECT NO. A8950-06-12	FIG. B5

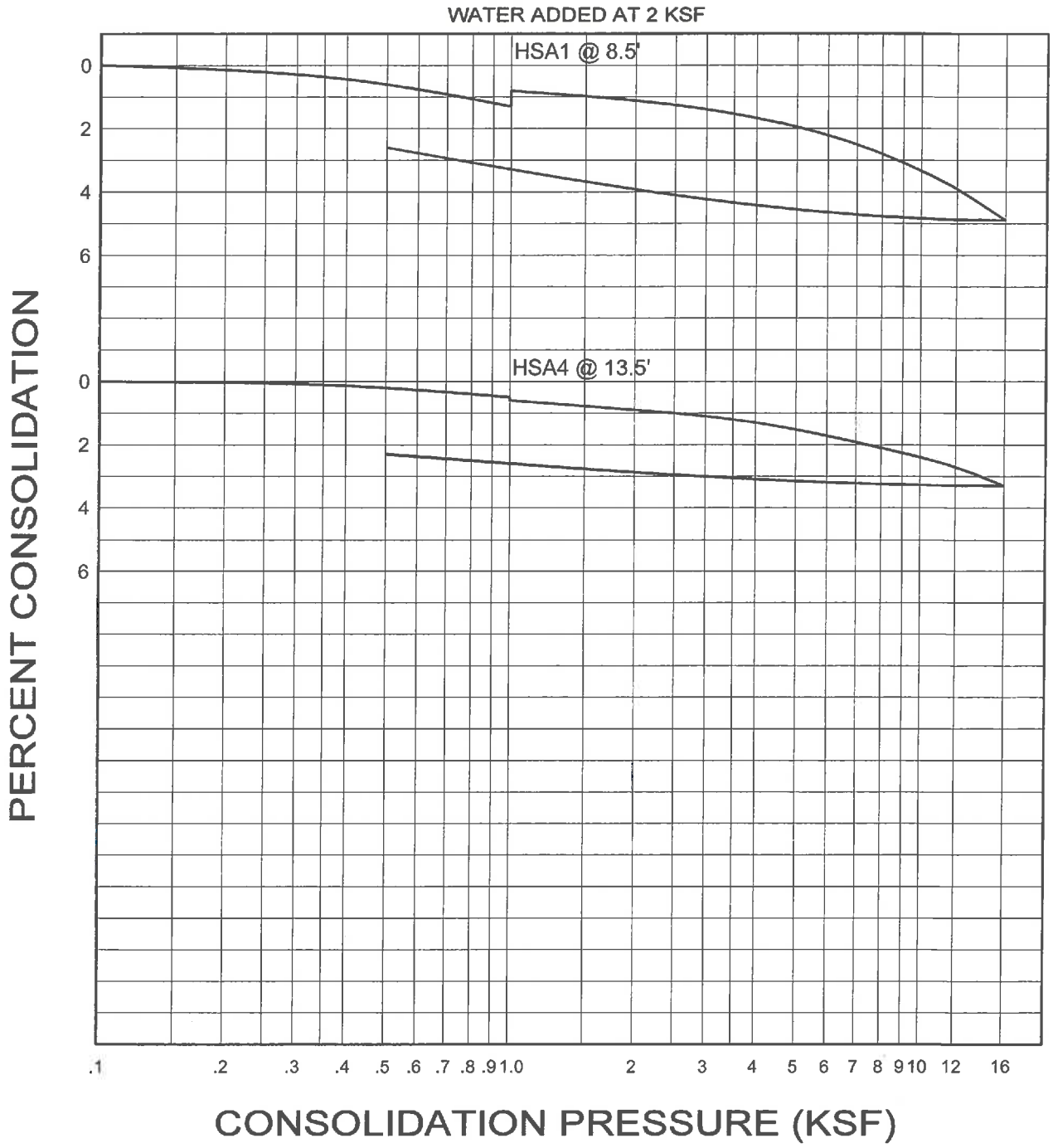

GEOCON
WEST, INC.

ENVIRONMENTAL GEOTECHNICAL MATERIALS
3303 N. SAN FERNANDO BLVD. - SUITE 100 - BURBANK, CA 91504
PHONE (818) 841-8388 - FAX (818) 841-1704

DRAFTED BY: TL	CHECKED BY: HHD

CONSOLIDATION TEST RESULTS

CITY OF LA BUREAU OF ENGINEERING
GRANADA HILLS POOL REPLACEMENT
16730 CHATSWORTH STREET
LOS ANGELES, CALIFORNIA

JULY 2017	PROJECT NO. A8950-06-12	FIG. B6

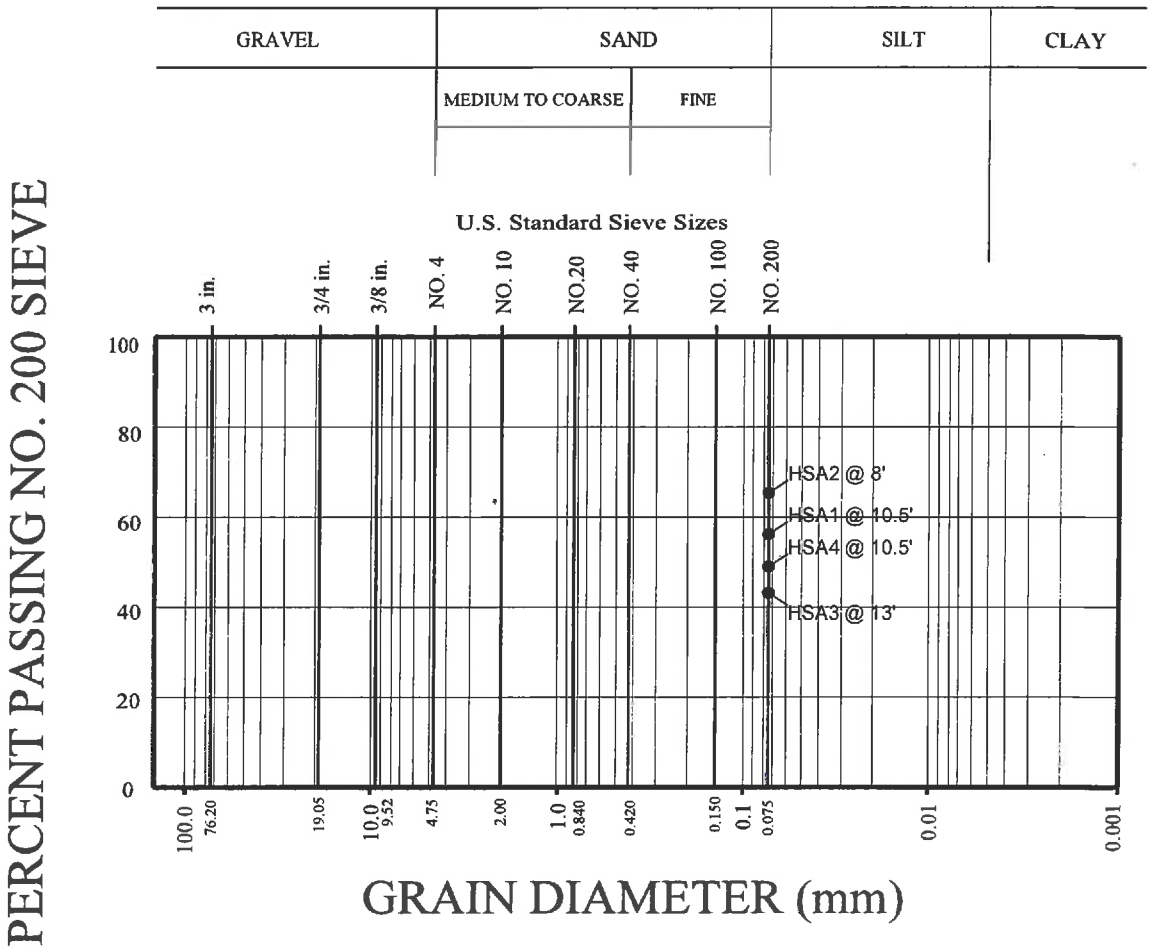

SAMPLE	PERCENT PASSING NO. 200 SIEVE
HSA1 @ 10.5'	58.1
HSA2 @ 8'	72.7
HSA3 @ 13'	41.6
HSA4 @ 10.5'	44.5

GEOCON
WEST, INC.
ENVIRONMENTAL GEOTECHNICAL MATERIALS
3303 N. SAN FERNANDO BLVD. - SUITE 100 - BURBANK, CA 91504
PHONE (818) 841-8388 - FAX (818) 841-1704

DRAFTED BY: TL | CHECKED BY: HHD

GRAIN SIZE ANALYSIS

CITY OF LA BUREAU OF ENGINEERING
GRANADA HILLS POOL REPLACEMENT
16730 CHATSWORTH STREET
LOS ANGELES, CALIFORNIA

JULY 2017 | PROJECT NO. A8950-06-12 | FIG. B7

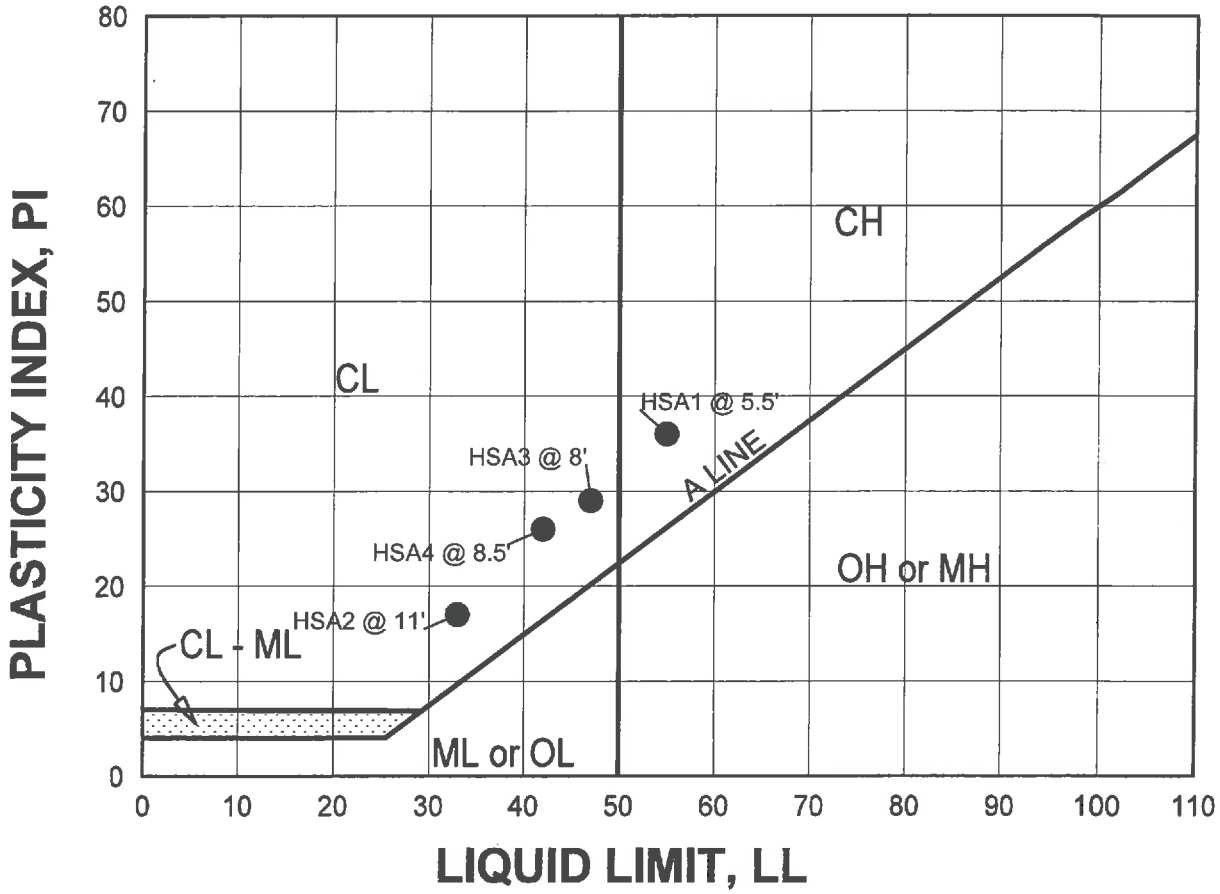

BORING NUMBER	DEPTH (FEET)	LL	PL	PI	SOIL BEHAVIOR
HSA1	5.5	55.0	19.0	36.0	CH
HSA2	11.0	33.0	16.0	17.0	CL
HSA3	8.0	47.0	18.0	29.0	CL
HSA4	8.5	42.0	16.0	26.0	CL

*N/P INDICATES NON-PLASTIC

GEOCON
WEST, INC.

ENVIRONMENTAL GEOTECHNICAL MATERIALS
3303 N. SAN FERNANDO BLVD. - SUITE 100 - BURBANK, CA 91504
PHONE (818) 841-8388 - FAX (818) 841-1704

DRAFTED BY: TL | CHECKED BY: HHD

ATTERBERG LIMITS

CITY OF LA BUREAU OF ENGINEERING
GRANADA HILLS POOL REPLACEMENT
16730 CHATSWORTH STREET
LOS ANGELES, CALIFORNIA

JULY 2017 | PROJECT NO. A8950-06-12 | FIG. B8

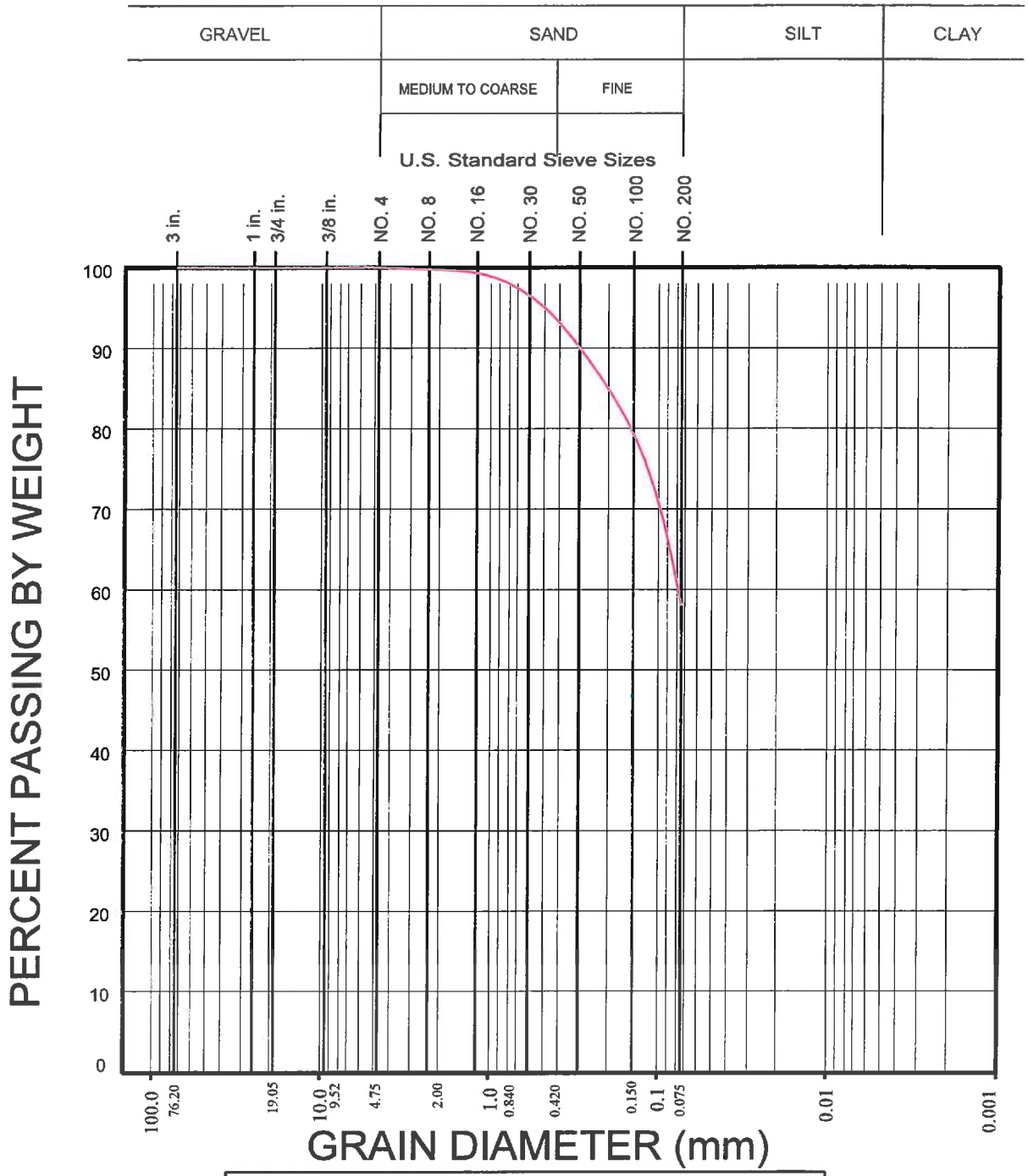

SAMPLE	UNIFIED SOIL CLASSIFICATION
HSA1 @ 10.5'	Sandy Silt (ML)

GEOCON
WEST, INC.

ENVIRONMENTAL GEOTECHNICAL MATERIALS
3303 N. SAN FERNANDO BLVD. - SUITE 100 - BURBANK, CA 91504
PHONE (818) 841-8388 - FAX (818) 841-1704

DRAFTED BY: TL	CHECKED BY: HHD

GRAIN SIZE DISTRIBUTION

CITY OF LA BUREAU OF ENGINEERING
GRANADA HILLS POOL REPLACEMENT
16730 CHATSWORTH STREET
LOS ANGELES, CALIFORNIA

JULY 2017	PROJECT NO. A8950-06-12	FIG. B9

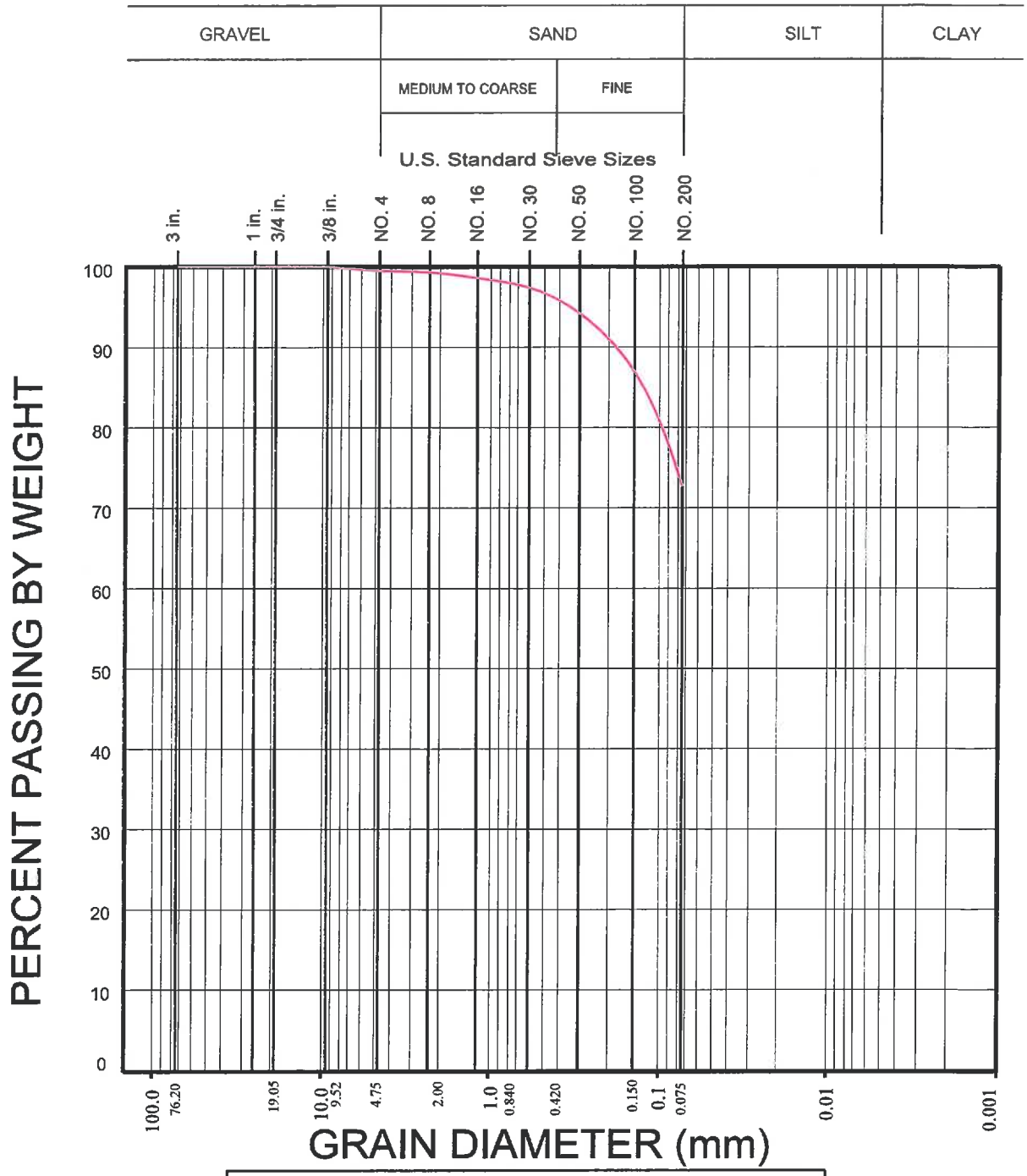

SAMPLE	UNIFIED SOIL CLASSIFICATION
HSA2 @ 8'	Sandy Silt (ML)

GEOCON
WEST, INC.

ENVIRONMENTAL GEOTECHNICAL MATERIALS
3303 N. SAN FERNANDO BLVD. - SUITE 100 - BURBANK, CA 91504
PHONE (818) 841-8388 - FAX (818) 841-1704

DRAFTED BY: TL	CHECKED BY: HHD

GRAIN SIZE DISTRIBUTION

CITY OF LA BUREAU OF ENGINEERING
GRANADA HILLS POOL REPLACEMENT
16730 CHATSWORTH STREET
LOS ANGELES, CALIFORNIA

JULY 2017	PROJECT NO. A8950-06-12	FIG. B10

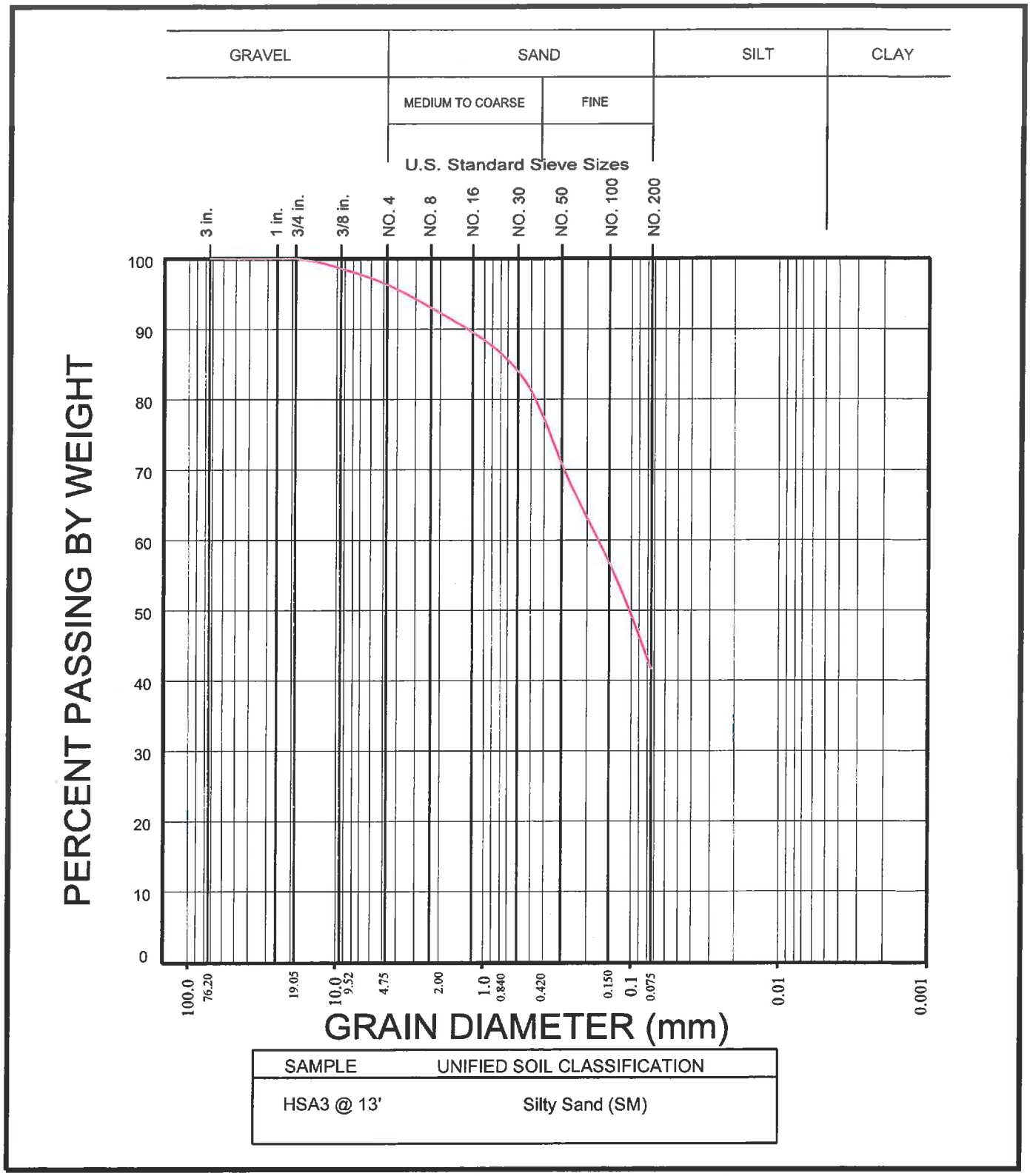

SAMPLE	UNIFIED SOIL CLASSIFICATION
HSA3 @ 13'	Silty Sand (SM)

GEOCON
WEST, INC.

ENVIRONMENTAL GEOTECHNICAL MATERIALS
3303 N. SAN FERNANDO BLVD. - SUITE 100 - BURBANK, CA 91504
PHONE (818) 841-8388 - FAX (818) 841-1704

DRAFTED BY: TL	CHECKED BY: HHD

GRAIN SIZE DISTRIBUTION

CITY OF LA BUREAU OF ENGINEERING
GRANADA HILLS POOL REPLACEMENT
16730 CHATSWORTH STREET
LOS ANGELES, CALIFORNIA

JULY 2017	PROJECT NO. A8950-06-12	FIG. B11

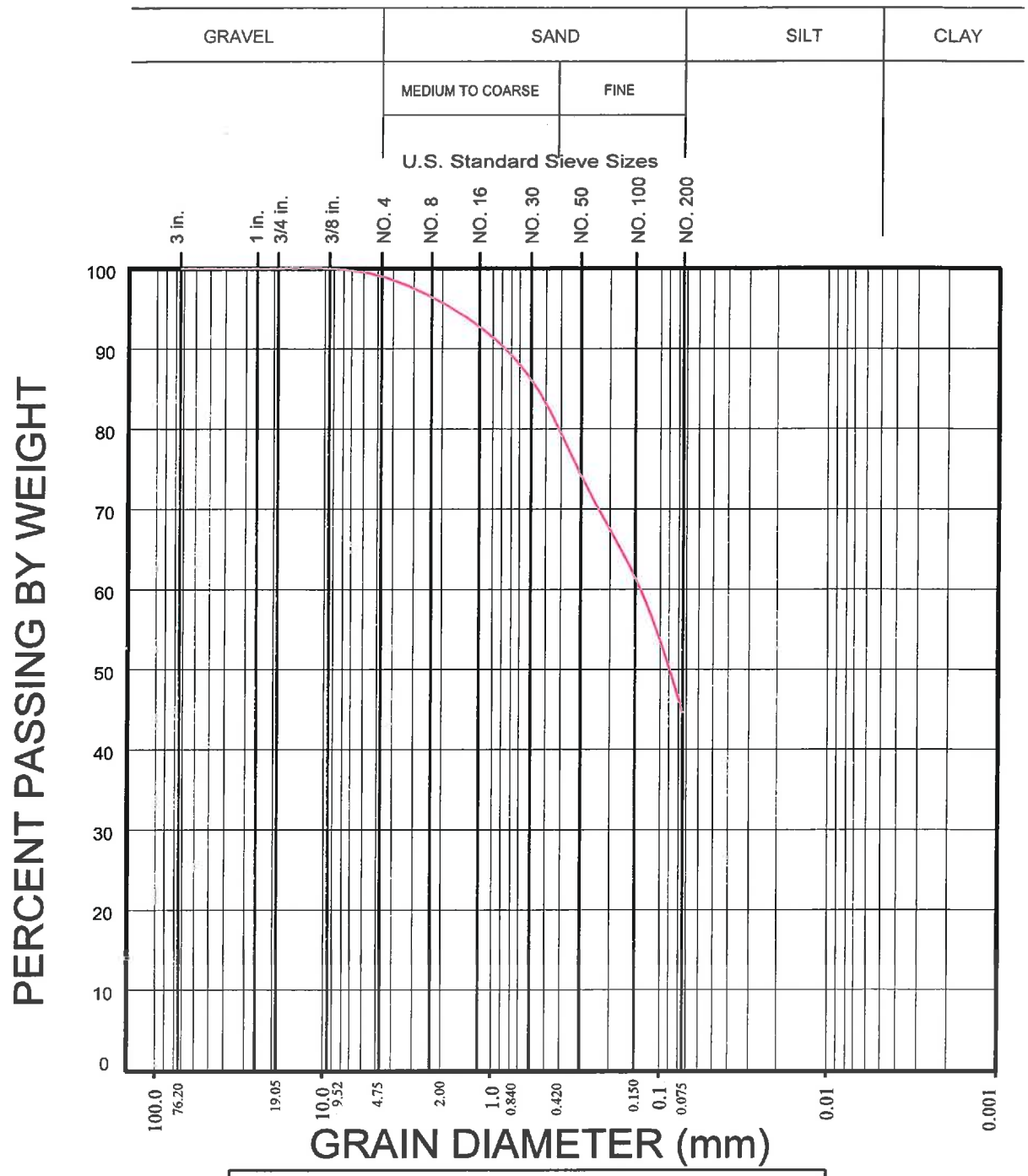

SAMPLE	UNIFIED SOIL CLASSIFICATION
HSA4 @ 10.5'	Sity Sand (SM)

GEOCON
WEST, INC.

ENVIRONMENTAL GEOTECHNICAL MATERIALS
3303 N. SAN FERNANDO BLVD. - SUITE 100 - BURBANK, CA 91504
PHONE (818) 841-8388 - FAX (818) 841-1704

DRAFTED BY: TL | CHECKED BY: HHD

GRAIN SIZE DISTRIBUTION

CITY OF LA BUREAU OF ENGINEERING
GRANADA HILLS POOL REPLACEMENT
16730 CHATSWORTH STREET
LOS ANGELES, CALIFORNIA

JULY 2017 | PROJECT NO. A8950-06-12 | FIG. B12

SUMMARY OF LABORATORY EXPANSION INDEX TEST RESULTS
ASTM D 4829-11

Sample No.	Moisture Content (%)		Dry Density (pcf)	Expansion Index	*UBC Classification	**CBC Classification
	Before	After				
HSA4 @ 0-5'	8.7	17.9	113.0	30	Low	Expansive

* Reference: 1997 Uniform Building Code, Table 18-I-B.

** Reference: 2016 California Building Code, Section 1803.5.3

SUMMARY OF LABORATORY MAXIMUM DENSITY AND AND OPTIMUM MOISTURE CONTENT TEST RESULTS
ASTM D 1557-12

Sample No.	Soil Description	Maximum Dry Density (pcf)	Optimum Moisture (%)
HSA1 @ 0-5'	Brown Silty Sand	132.0	8.0

GEOCON
WEST, INC.

ENVIRONMENTAL GEOTECHNICAL MATERIALS
3303 N. SAN FERNANDO BLVD. - SUITE 100 - BURBANK, CA 91504
PHONE (818) 841-8388 - FAX (818) 841-1704

DRAFTED BY: TL | CHECKED BY: HHD

LABORATORY TEST RESULTS

CITY OF LA BUREAU OF ENGINEERING
GRANADA HILLS POOL REPLACEMENT
16730 CHATSWORTH STREET
LOS ANGELES, CALIFORNIA

JULY 2017 | PROJECT NO. A8950-06-12 | FIG. B13

SUMMARY OF LABORATORY POTENTIAL OF HYDROGEN (pH) AND RESISTIVITY TEST RESULTS CALIFORNIA TEST NO. 643

Sample No.	pH	Resistivity (Ohm Centimeters)
HSA-1 @ 5.5'	8.0	940 (Severely Corrosive)
HSA-2 @ 6'	8.4	1200 (Corrosive)

SUMMARY OF LABORATORY CHLORIDE CONTENT TEST RESULTS EPA NO. 325.3

Sample No.	Chloride Ion Content (%)
HSA-1 @ 5.5'	0.009
HSA-2 @ 6'	0.016

SUMMARY OF LABORATORY WATER SOLUBLE SULFATE TEST RESULTS CALIFORNIA TEST NO. 417

Sample No.	Water Soluble Sulfate (% SO_4)	Sulfate Exposure*
HSA-1 @ 5.5'	0.001	Negligible
HSA-2 @ 6'	0.000	Negligible

* Reference: 2016 California Building Code, Section 1904.3 and ACI 318-11 Section 4.3.

GEOCON
W E S T, I N C.

ENVIRONMENTAL GEOTECHNICAL MATERIALS
3303 N. SAN FERNANDO BLVD. - SUITE 100 - BURBANK, CA 91504
PHONE (818) 841-8388 - FAX (818) 841-1704

DRAFTED BY: TL | CHECKED BY: HHD

CORROSIVITY TEST RESULTS

CITY OF LA BUREAU OF ENGINEERING
GRANADA HILLS POOL REPLACEMENT
16730 CHATSWORTH STREET
LOS ANGELES, CALIFORNIA

JULY 2017 | PROJECT NO. A8950-06-12 | FIG. B14

CITY OF LOS ANGELES
DEPARTMENT OF PUBLIC WORKS
Bureau of Engineering
GEOTECHNICAL ENGINEERING DIVISION

October 25, 2018

SUPPLEMENTAL GEOTECHNICAL REPORT – GRANADA HILLS POOL REPLACEMENT PROJECT
16730 CHATSWORTH STREET
LOS ANGELES, CALIFORNIA
W.O. E170517A **GED FILE NO. 17-074**

INTRODUCTION

The Los Angeles Department of Public Works, Bureau of Engineering, Geotechnical Engineering Division (GED) has prepared this report to provide supplemental recommendations for the project. The GED previously prepared a geotechnical engineering report dated August 22, 2017, which was approved by the Los Angeles Department of Building and Safety (LADBS), Grading Division on November 9, 2017 (Log Number 100428). All previous recommendations for the project remain applicable, except those specifically modified herein.

PROJECT DESCRIPTION

At the time our original report was prepared, the project included demolishing and replacing the existing pool. The project also included a new pool deck, diving platform, shade structure and other improvements. The proposed project has expanded now includes the construction of several additional structures and improvements. A copy of the most recent site plan, Sheet A1.10, is attached to this report for reference. The additional structures and improvements include:

- Replacement of an existing pool equipment building on the east side of the proposed pool. The surge chamber for the pool will be incorporated into the pool equipment building. We understand the building will contain a sump pit and surge chamber. The sump pit and surge chamber will extend approximately 6 and 10 feet below grade, respectively.

- A concrete ramp on the south side of the pool equipment building.

- A splash pad and surge chamber for the splash pad on the north side of the proposed pool.

- A new lifeguard room addition on the east side of the existing bathhouse. The addition will be about 20 feet long by 10 feet wide.

- Photovoltaic (PV) panels on the north and south sides of the pool. The PV panels will be supported on cast-in-drilled-hole (CIDH) piles.

- Security light poles; one near each of the four corners of the pool.

- Asphalt concrete (AC) pavement on the east side of the proposed splash pad.
- Portland Cement Concrete (PCC) concrete driveway on the north side of the proposed pool equipment building.

SUBSURFACE CONDITIONS

As discussed in the original geotechnical report, uncertified fill was encountered in all six exploratory borings. The fill thickness varies from approximately 4 to 6 feet below ground surface (bgs). The fill is mostly comprised of poorly graded sand with silt or silty sand, although sandy silt was encountered in one of the borings (HSA-4). Fill indicators including plastic debris, asphalt and brick fragments were observed in the uncertified fill. The boring logs indicate significant variation in the composition of the native soil, but overall the native soil is mostly fine grained. The upper native soil mostly consists of lean to fat clay.

RECOMMENDATIONS

Supplemental recommendations are provided in the following sections for earthwork, temporary shoring, shallow foundations, CIDH pile foundations for the proposed PV panels, retaining walls, and preliminary pavement design.

Earthwork

Pool Equipment Building: Footings may be embedded into native soil and/or compacted fill. If the footings are supported on compacted fill, the compacted fill thickness shall be at least 30 inches below the bottom of footing. The excavation shall extend laterally at least ½ the vertical over-excavation depth beyond the edge of the building. Lateral over-excavation is not required for footings embedded into native soil. All existing uncertified fill shall be removed beneath interior concrete slabs and replaced with compacted secondary fill.

Lifeguard Room Addition (E side of Existing Bathhouse): Footings shall be embedded into native soil; therefore, over-excavation is not required. All existing uncertified fill shall be removed beneath the interior concrete slab-on-grade.

Splash pad, Concrete Ramp and Pavement Areas: The existing fill shall be removed to a depth of at least 24 inches below existing grade or finished subgrade, whichever is greater. The vertical over-excavation shall result in at least 24 inches of compacted fill beneath the slab or pavement section. The excavation shall extend laterally at least 2 feet beyond the edges of the concrete slab / pavement.

PV Panels: We anticipate these structures will be supported on CIDH piles; over-excavation is not required in these areas.

Temporary Shoring

Cantilever or braced shoring may be considered at this site as an alternative to temporary excavations. The maximum retained height for a cantilever shoring system shall not exceed 15 feet. All shoring systems shall be designed such that the maximum deflection does not exceed ½-inch. Box shoring, trench shields, and/or speed shores may only be used at the discretion of the GED.

Prior to excavation, it is recommended that walls, structures, or portions of structures within a horizontal distance of 1½ times the depth of the excavation be inspected to determine their present condition. For documentation purposes, photographs should be taken of preconstruction conditions and level surveys should be performed.

During construction, deflection of the shoring system shall be monitored initially on a frequent basis until it can be demonstrated that adjacent structures are not adversely impacted. At that time, less frequent monitoring can be performed. In addition, structures should be periodically monitored for signs of distress. In the event that distress is observed, the GED shall be contacted immediately to provide supplemental recommendations.

Lateral Earth Pressures

Cantilever or braced shoring shall be designed for the lateral earth pressures shown on Figure 1. These values are based on the assumption that (1) the shored soil material is level at ground surface, (2) the exposed height of the shoring is no greater than 15 feet, and (3) the shoring is temporary, and will not be required to support the soil longer than about six months. Surcharge coefficients of 0.31 and 0.47 may be used with uniform vertical surcharges for cantilever and braced shoring lateral earth pressures, respectively. These surcharge pressures should be added to the lateral earth pressures.

Soldier Piles and Lagging Design

Drilled holes for soldier piles shall be backfilled with Controlled Low Strength Material (CLSM) per Greenbook Section 201, from the bottom of lagging (i.e. proposed excavation depth) to the ground surface. The CLSM shall contain a minimum of one sack of Portland cement per cubic yard of slurry and a maximum of two sacks of Portland cement per cubic yard of slurry. Drilled holes below the excavation bottom shall be backfilled with structural concrete. To reduce the potential for sloughing and caving of the soils, continuous lagging shall be installed between the soldier piles. All lumber shall be pressure-treated in accordance with Specification C-2 of the American Wood Preservers Association.

Shallow Foundations

The shallow foundation recommendations provided in the original geotechnical report for footings underlain by at least 30 inches of compacted fill remain applicable.

Footings embedded at least 6 inches into firm and unyielding native soil may be designed for a net allowable bearing capacity of 2,000 pounds per square foot (psf). The net allowable bearing capacity values apply to combined dead and sustained live loads. A 1/3 increase may be used for short term loading conditions such as wind or seismic forces.

The total settlement beneath each structure is not expected to exceed 1-inch. The differential settlement is not expected to exceed ½-inch.

CIDH Pile Foundations – PV Canopies

All recommendations provided in Section 6.3 of the original report remain applicable, except for Section 6.3.3.

Lateral Load Behavior

The lateral load behavior of the CIDH piles was evaluated using the LPILE (Ensoft, 2016) software program. The lateral load was evaluated for a free head condition based on an acceptable deflection criterion of ½-inch at the pile head. We assumed a concrete compressive strength of 3,000 psi for our analyses. LPILE analyses were performed for the following loading conditions, which were provided to us by the structural engineer:

Loading Condition	Shear (kips)	Moment (kip-ft)	Steel Reinforcement (%)	Pile Length (ft)
Canopy 1	4030	16.8	0.58	10
Canopy 2 "Case A"	8028	28.7	0.78	12
Canopy 2 "Case B"	7883	33.6	0.88	12

The results of our LPILE analyses are attached to this report. The results indicate the deflection is ½-inch or less for all three cases; therefore, we consider the designs to be acceptable from a geotechnical standpoint.

Retaining Walls

Lateral Earth Pressures

The lateral earth pressure recommendations provided in Section 6.4 of the original report remain applicable for the below-grade "restrained" walls associated with the new pool equipment building.

Site retaining walls, which are free to rotate at the top (i.e. cantilever), shall be designed to withstand an equivalent active fluid pressure of 40 pcf. This recommended lateral earth pressure of 40 pcf assume: 1) the surface of the backfill behind the walls is close to horizontal (inclination of 5:1 or flatter), 2) the backfill will be non-expansive, and 3) there will be no hydrostatic pressure buildup behind the wall. Care should be exercised to prevent infiltration of surface water behind all site retaining walls.

If surcharge loads (live or dead) are applied, they should be added to the lateral earth pressures above by applying a uniform (rectangular) pressure. Surcharge coefficients of 0.31 and 0.47 may be used with uniform vertical surcharges for active and at-rest conditions, respectively. These surcharge pressures should be added to the lateral earth pressures provided above.

The seismically induced pressure recommendations for a restrained condition, as provided in Section 6.4 of the original report, remain applicable for the pool equipment building walls. Cantilever walls greater than 6 feet high are not anticipated; therefore, these walls do not need to be designed for a seismic earth pressure(s).

Preliminary Pavement Design

R-value tests were not performed on the upper soils as part of the original geotechnical investigation. The recommendations provided in this section assume the upper soils consist of sand to silty sand material, as shown on the boring logs for HSA-1 and HSA-2. We assumed an R-value of 35 for our analyses. We recommend samples of the prepared subgrade be collected and tested following grading to confirm the pavement design sections herein are applicable. *All pavement sections shall be underlain by at least 24 inches of subgrade soil that has been compacted to a minimum of 95 percent RC.* All crushed aggregate base (CAB) and/or crushed miscellaneous base (CMB) shall be compacted to at least 95 percent RC. Recommendations for asphalt and Portland cement concrete pavement design sections are presented below.

Preliminary Asphalt Pavement Sections

The traffic indexes (TIs) were not provided to us at the time of the report. Preliminary pavement sections were calculated for the range of traffic indexes shown in the table below. The recommended conventional flexible pavement layer thicknesses are as follows.

ASPHALT PAVEMENT SECTION LAYER THICKNESSES (INCHES) – OPTION 1

Layer	Traffic Index = 5.0	Traffic Index = 6.0	Traffic Index = 7.0	Traffic Index = 8.0	Traffic Index = 9.0
Asphalt Concrete Surface	2.0	3.0	3.5	4.0	4.5
CAB / CMB	6.5	7.5	9.0	11.0	12.5

ASPHALT PAVEMENT SECTION LAYER THICKNESSES (INCHES) – OPTION 2

Layer	Traffic Index = 5.0	Traffic Index = 6.0	Traffic Index = 7.0	Traffic Index = 8.0	Traffic Index = 9.0
Asphalt Concrete Surface	2.5	3.5	4.0	4.5	5.0
CAB / CMB	5.5	6.0	8.0	10.0	12.0

CAB, CMB, and asphalt concrete shall conform to Sections 203 and 302 of the latest edition of the Standard Specifications for Public Works Construction ("Greenbook").

Portland Cement Concrete Pavement

Portland cement concrete (PCC) pavement may be used as an alternative to AC. For TIs up to and including 7, a section of 6 inches of PCC over 12 inches of CAB/CMB is recommended. For TIs of 8 and 9, the PCC section should be increased to 7 and 8 inches, respectively. The Portland Cement Concrete should have a minimum modulus of rupture of 650 psi at 28 days.

Site Drainage

All pavement areas shall be designed for a minimum surface gradient of at least 1 percent and all flow lines should have gradients of 2 percent in order to prevent water percolation through the pavement and subsequent saturation of the subgrade. It would be desirable to locate the flow lines away from high traffic areas.

CLOSURE

If you have any questions about this report, please contact Easton Forcier at (213) 847-0476.

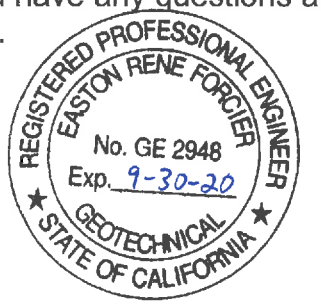

Easton F 10-25-18

Easton R Forcier, GE 2948
Geotechnical Engineer II

Attachments: Sheet A-1.10 – Facility Site Plan
Figure 1 – Lateral Earth Pressures for Temporary Shoring Systems
Results of LPILE Analyses for PV Canopies

Q:\PROJECTS\2017\17-074 Granada Hills Pool Replacement\Report\Supplemental Report\Supplemental Report 10-25-18.doc

ATTACHMENTS

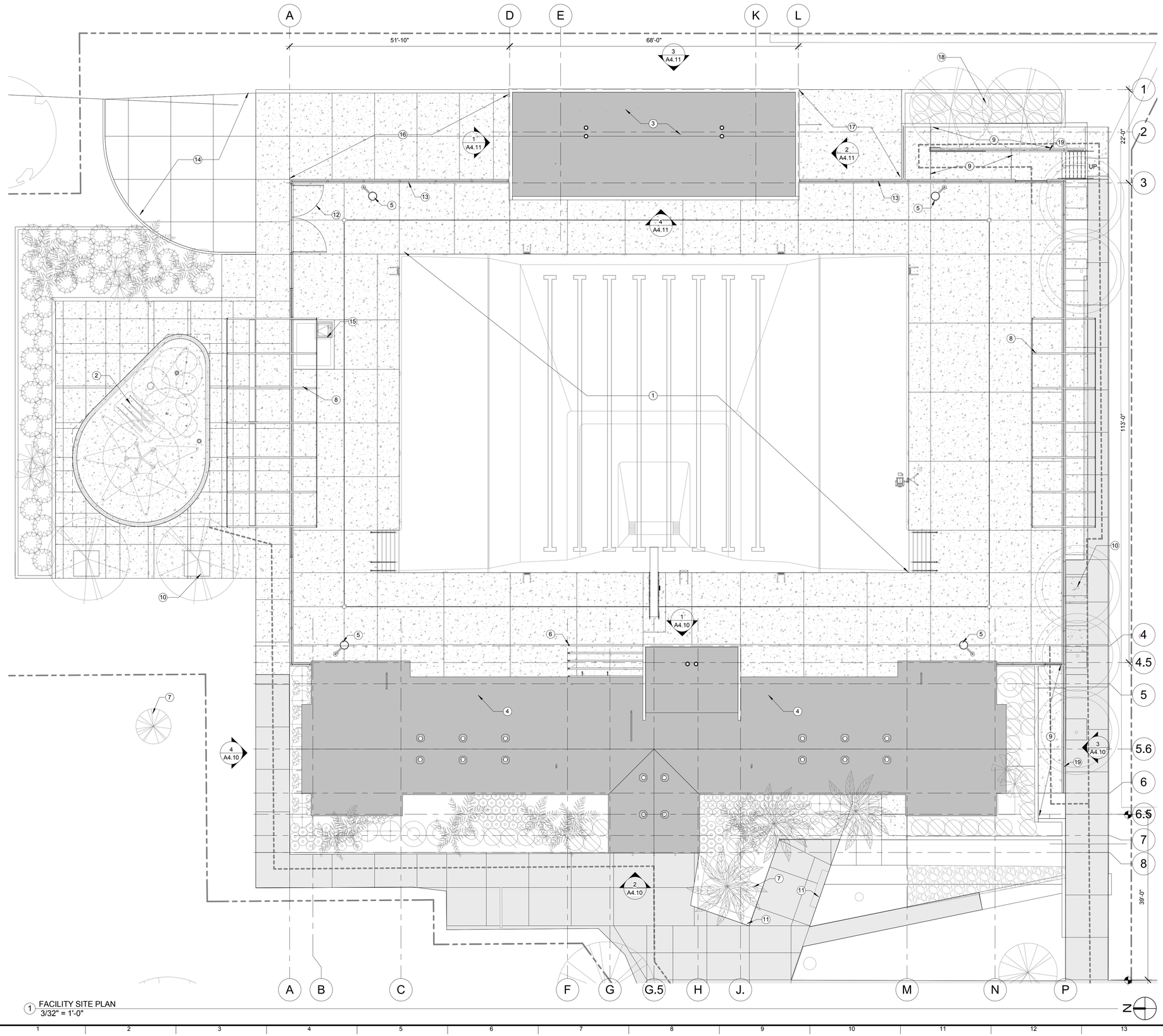

1 FACILITY SITE PLAN
3/32" = 1'-0"

SITE PLAN GENERAL NOTES

1. S.C.D. FOR GRADE, UTILITY INFO FOR DETAILS.
2. S.L.D. FOR IRRIGATION, LANDSCAPE INFO AND DETAILS.

KEYNOTE LEGEND

1 (N) SWIMMING POOL, S.AQ.D.
2 (N) SPLASH PAD, S.AQ.D.
3 (N) NEW EQUIPMENT BUILDING
4 (E) BATHHOUSE TO BE RENOVATED.
5 (N) NEW LIGHT POLE, S.E.D.
6 (N) STEEL SHADE STRUCTURE. PAINT PER SCHEDULE.
7 (E) TREE TO REMAIN, TYP. PROTECT. S.L.D.
8 (N) T.S. STRUCTURE FOR PHOTOVOLTAIC PANEL
9 (N) CONCRETE RAMP. S.C.D.
10 (N) TREE, TYP. S.L.D.
11 (E) EXISTING CONCRETE BENCH TO REMAIN, PROTECT.
12 (N) TUBE STEEL SERVICE GATE. REF DOOR SCHEDULE AND DETAILS.
13 (N) TUBE STEEL FENCE ON (N) 10" W CONC CURB, REF DETAILS.
14 (N) ASPHALT PAVEMENT, S.C.D.
15 (N) BALANCE TANK/PIT AND HATCH. S.AQ.D.
16 (N) CONC DRIVEWAY. S.C.D.
17 (N) CONC PAD. S.C.D.
18 (N) PLANTER BED W/ RETAINING WALL/CURB. S.C.D AND S.L.D.
19 (N) GUARDRAIL. REF DETAILS.

GRAPHIC LEGEND

EXTENT OF WORK
ADA PATH OF TRAVEL
PROPERTY LINE
(E) HARDSCAPE TO BE PROTECTED
(N) HARDSCAPE. S.C.D.

THE CITY OF LOS ANGELES OR ITS OFFICERS OR AGENTS SHALL NOT BE RESPONSIBLE FOR THE ACCURACY OR COMPLETENESS OF ELECTRONIC COPIES OF THIS PLAN SHEET.

TTLB TEMPLATE REVISION DATE: 02/2013
SHEET ISSUE DATE: 12/11/17
FILE PATH: BIM 360://Granada Hills Pool Renovation/A_Granada-Hills_2017.rvt

REVISION DATES
(DESIGN STAGE ONLY)

ENGINEERING
CITY OF LOS ANGELES
BUREAU OF ENGINEERING
NO. | REVISION DESCRIPTION | DATE | BY
BUILDING NO. -
INDEX NO.
DEPARTMENT OF PUBLIC WORKS
GARY LEE MOORE, PE, ENV SP
CITY ENGINEER
ARCHITECTURAL DIVISION
ARCHITECT/ENGINEER: JOHN SPARANO LIC. NO.: LICENSE
DESIGNED BY: SPARANO + MOONEY ARCHITECTURE
DRAWN BY: PHILIP DIMICK
CHECKED BY: LUDWING JUAREZ
APPROVED BY:
DATE: 10/11/18
CITY OF LOS ANGELES
VERTICAL CONTROL:
HORIZONTAL CONTROL:
SHEET TITLE: FACILITY SITE PLAN
PROJECT: GRANADA HILLS POOL AND BATHHOUSE REPLACEMENT PROJECT
ADDRESS: 16730 CHATSWORTH STREET GRANADA HILLS, CA 91344
PROJECT ISSUE DATE: 10/11/18
WORK ORDER NO. #E170517
PLAN FILE NO.
DRAWING NO. A1.10
SHEET OF SHEETS
PLOTTED:10/11/2018 2:30:16 PM

Q:\PROJECTS\2017\17-074 Granada Hills Pool Replacement\Analysis\Lateral earth pressures shoring

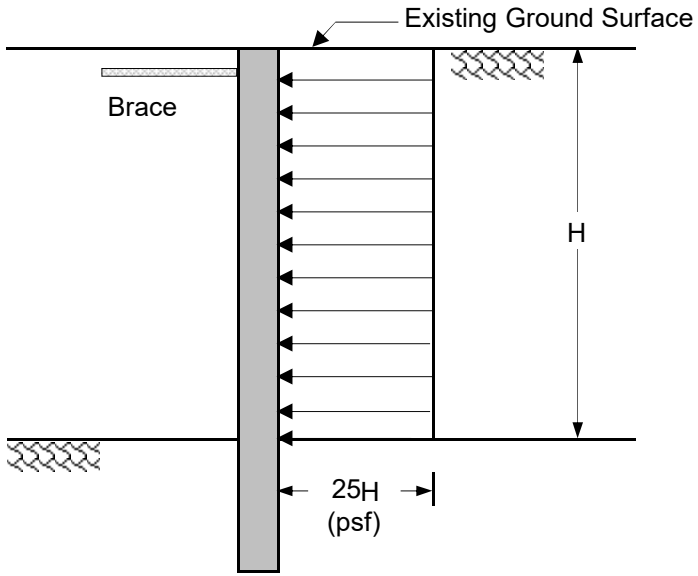

BRACED SHORING

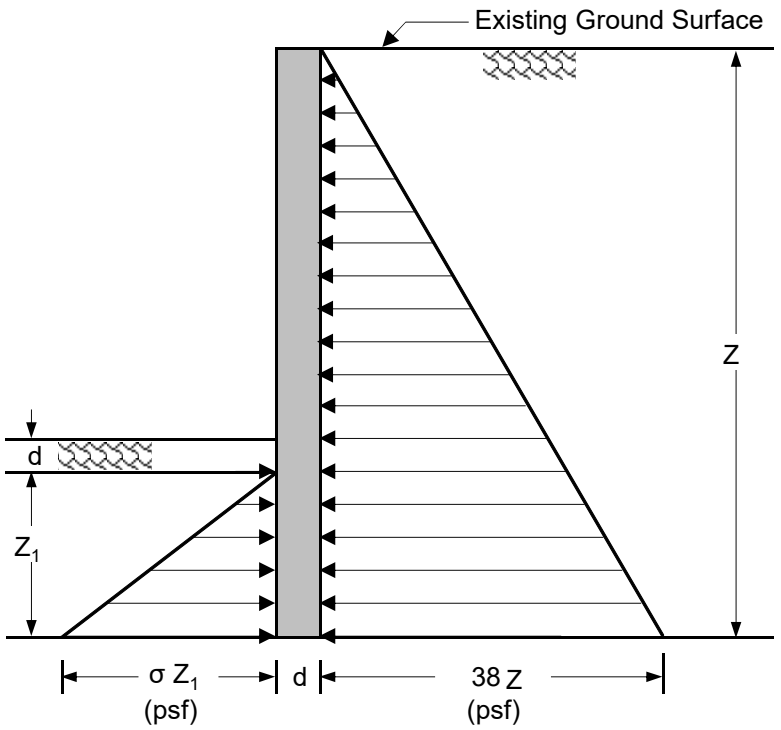

CANTILEVER SHORING

σ = 540 pcf for soldier piles spaced at least 2.5d apart
σ = 270 pcf for soldier piles spaced less than 2.5d apart

Notes:
1. Not to scale.
2. Dimensions are in feet.
3. Earth pressures shown are based on level backfill conditions behind shoring elements and groundwater below bottom of shoring elements.

LATERAL EARTH PRESSURES FOR TEMPORARY SHORING SYSTEMS
GRANADA HILLS POOL REPLACEMENT PROJECT
Los Angeles, California

By: ERF	Date: 10/17/2018	GED Fil No.: 17-074
City of Los Angeles, DPW, BOE, Geotechnical Engineering Division		Figure **1**

Lateral Pile Deflection (inches)
-0.1 -0.05 0 0.05 0.1 0.15 0.2 0.25 0.3
Depth (ft)
0 0.5 1 1.5 2 2.5 3 3.5 4 4.5 5 5.5 6 6.5 7 7.5 8 8.5 9 9.5
Case 1

Bending Moment (in-kips)
0 100 200 300 400 500
Depth (ft)
0 0.5 1 1.5 2 2.5 3 3.5 4 4.5 5 5.5 6 6.5 7 7.5 8 8.5 9 9.5

Shear Force (kips)
-14 -12 -10 -8 -6 -4 -2 0 2 4
Depth (ft)
0 0.5 1 1.5 2 2.5 3 3.5 4 4.5 5 5.5 6 6.5 7 7.5 8 8.5 9 9.5

Sand
Cem. Silt

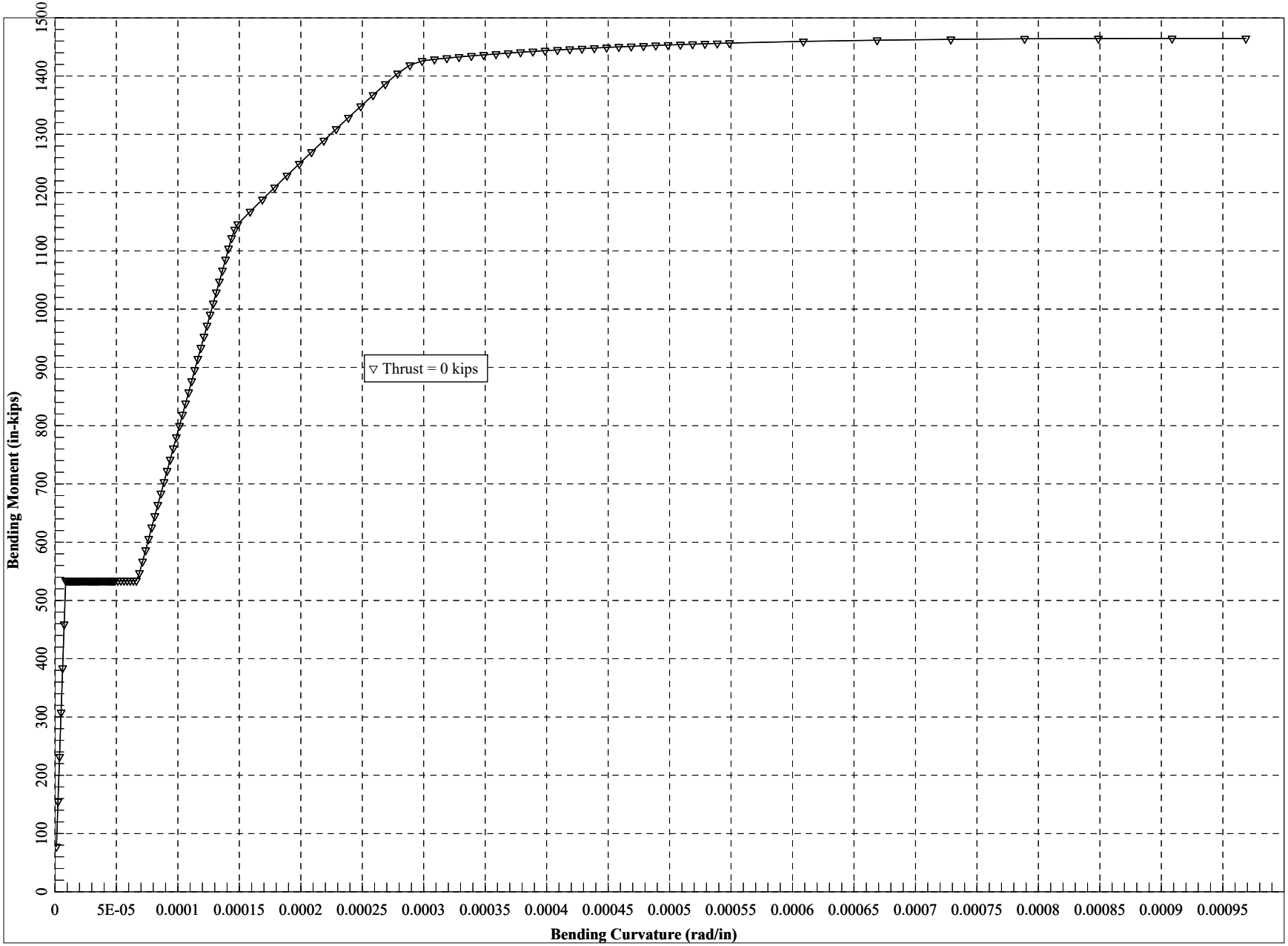
Bending Moment (in-kips)
0
100
200
300
400
500
600
700
800
900
1000
1100
1200
1300
1400
1500
Thrust = 0 kips
0
5E-05
0.0001
0.00015
0.0002
0.00025
0.0003
0.00035
0.0004
0.00045
0.0005
0.00055
0.0006
0.00065
0.0007
0.00075
0.0008
0.00085
0.0009
0.00095
Bending Curvature (rad/in)

PV Panel Case 1 Free Head.lp9o

LPile for Windows, Version 2016-09.010

Analysis of Individual Piles and Drilled Shafts
Subjected to Lateral Loading Using the p-y Method
© 1985-2016 by Ensoft, Inc.
All Rights Reserved

This copy of LPile is being used by:

LA City BOE
LA City BOE

Serial Number of Security Device: 225227467

This copy of LPile is licensed for exclusive use by:

L.A. Bureau of Engineering, Los

Use of this program by any entity other than L.A. Bureau of Engineering, Los
is a violation of the software license agreement.

Files Used for Analysis

Path to file locations:
\PROJECTS\2017\17-074 Granada Hills Pool Replacement\Analysis\LPILE 2018\

Name of input data file:
PV Panel Case 1 Free Head.lp9d

Name of output report file:
PV Panel Case 1 Free Head.lp9o

Name of plot output file:
PV Panel Case 1 Free Head.lp9p

Name of runtime message file:
PV Panel Case 1 Free Head.lp9r

Date and Time of Analysis

Date: October 11, 2018 Time: 10:20:41

Problem Title

Project Name: Strathern Park North Baseball Fields

Job Number: 14-090

Client:

Engineer: Easton

Description: Baseball Field Light Pole Foundations

Program Options and Settings

Computational Options:
- Use unfactored loads in computations (conventional analysis)

Engineering Units Used for Data Input and Computations:
- US Customary System Units (pounds, feet, inches)

Analysis Control Options:

- Maximum number of iterations allowed	=	500
- Deflection tolerance for convergence	=	1.0000E-05 in
- Maximum allowable deflection	=	100.0000 in
- Number of pile increments	=	100

Loading Type and Number of Cycles of Loading:
 - Static loading specified

 - Use of p-y modification factors for p-y curves not selected
 - No distributed lateral loads are entered
 - Loading by lateral soil movements acting on pile not selected
 - Input of shear resistance at the pile tip not selected
 - Computation of pile-head foundation stiffness matrix not selected
 - Push-over analysis of pile not selected
 - Buckling analysis of pile not selected

Output Options:
 - Output files use decimal points to denote decimal symbols.
 - Values of pile-head deflection, bending moment, shear force, and
   soil reaction are printed for full length of pile.
 - Printing Increment (nodal spacing of output points) = 1
 - No p-y curves to be computed and reported for user-specified depths
 - Print using wide report formats

Pile Structural Properties and Geometry

Number of pile sections defined = 1
Total length of pile = 10.000 ft
Depth of ground surface below top of pile = 0.0000 ft

Pile diameters used for p-y curve computations are defined using 2 points.

p-y curves are computed using pile diameter values interpolated with depth over the length of the pile. A summary of values of pile diameter vs. depth follows.

Point No.	Depth Below Pile Head feet	Pile Diameter inches
1	0.000	24.0000
2	10.000	24.0000

Input Structural Properties for Pile Sections:

Pile Section No. 1:

Section 1 is a round drilled shaft, bored pile, or CIDH pile

Length of section	=	10.000000 ft
Shaft Diameter	=	24.000000 in
Shear capacity of section	=	0.0000 lbs

Ground Slope and Pile Batter Angles

Ground Slope Angle	=	0.000 degrees
	=	0.000 radians
Pile Batter Angle	=	0.000 degrees
	=	0.000 radians

Soil and Rock Layering Information

The soil profile is modelled using 2 layers

Layer 1 is sand, p-y criteria by Reese et al., 1974

Distance from top of pile to top of layer	=	0.0000 ft
Distance from top of pile to bottom of layer	=	6.000000 ft
Effective unit weight at top of layer	=	98.000000 pcf
Effective unit weight at bottom of layer	=	98.000000 pcf
Friction angle at top of layer	=	20.000000 deg.
Friction angle at bottom of layer	=	20.000000 deg.
Subgrade k at top of layer	=	0.0000 pci
Subgrade k at bottom of layer	=	0.0000 pci

NOTE: Default values for subgrade k will be computed for this layer.

Layer 2 is cemented silt with cohesion and friction

Distance from top of pile to top of layer	=	6.000000 ft
Distance from top of pile to bottom of layer	=	12.000000 ft
Effective unit weight at top of layer	=	125.000000 pcf
Effective unit weight at bottom of layer	=	125.000000 pcf
Undrained cohesion at top of layer	=	100.000000 psf
Undrained cohesion at bottom of layer	=	100.000000 psf
Friction angle at top of layer	=	31.000000 deg.
Friction angle at bottom of layer	=	31.000000 deg.

Epsilon-50 at top of layer = 0.0000
Epsilon-50 at bottom of layer = 0.0000
Subgrade k at top of layer = 0.0000 pci
Subgrade k at bottom of layer = 0.0000 pci

NOTE: Default values for Epsilon-50 will be computed for this layer.
NOTE: Default values for subgrade k will be computed for this layer.

(Depth of the lowest soil layer extends 2.000 ft below the pile tip)

Summary of Input Soil Properties

Layer Num.	Soil Type Name (p-y Curve Type)	Layer Depth ft	Effective Unit Wt. pcf	Undrained Cohesion psf	Angle of Friction deg.	E50 or kpy krm pci
1	Sand	0.00	98.0000	--	20.0000	--
	default					
	(Reese, et al.)	6.0000	98.0000	--	20.0000	--
	default					
2	Cemented	6.0000	125.0000	100.0000	31.0000	default
	default					
	Silt	12.0000	125.0000	100.0000	31.0000	default
	default					

Static Loading Type

Static loading criteria were used when computing p-y curves for all analyses.

Pile-head Loading and Pile-head Fixity Conditions

Number of loads specified = 1

Load No.	Load Type	Condition 1	Condition 2	Axial Thrust Force, lbs	Compute Top y vs. Pile Length
1	1	V = 4030. lbs	M = 201600. in-lbs	0.0000000	No

V = shear force applied normal to pile axis
M = bending moment applied to pile head
y = lateral deflection normal to pile axis
S = pile slope relative to original pile batter angle
R = rotational stiffness applied to pile head
Values of top y vs. pile lengths can be computed only for load types with specified shear loading (Load Types 1, 2, and 3).
Thrust force is assumed to be acting axially for all pile batter angles.

Computations of Nominal Moment Capacity and Nonlinear Bending Stiffness

---

Axial thrust force values were determined from pile-head loading conditions

Number of Pile Sections Analyzed = 1

Pile Section No. 1:

Dimensions and Properties of Drilled Shaft (Bored Pile):

Length of Section	= 10.000000	ft
Shaft Diameter	= 24.000000	in
Concrete Cover Thickness	= 3.000000	in
Number of Reinforcing Bars	= 6	bars
Yield Stress of Reinforcing Bars	= 60000.	psi
Modulus of Elasticity of Reinforcing Bars	= 29000000.	psi
Gross Area of Shaft	= 452.389342	sq. in.
Total Area of Reinforcing Steel	= 2.640000	sq. in.
Area Ratio of Steel Reinforcement	= 0.58	percent
Edge-to-Edge Bar Spacing	= 7.875000	in
Maximum Concrete Aggregate Size	= 0.750000	in
Ratio of Bar Spacing to Aggregate Size	= 10.50	
Offset of Center of Rebar Cage from Center of Pile	= 0.0000	in

Axial Structural Capacities:

Nom. Axial Structural Capacity = 0.85 Fc Ac + Fy As = 1305.261 kips
Tensile Load for Cracking of Concrete = -171.697 kips
Nominal Axial Tensile Capacity = -158.400 kips

Reinforcing Bar Dimensions and Positions Used in Computations:

Bar Number	Bar Diam. inches	Bar Area sq. in.	X inches	Y inches
1	0.750000	0.440000	8.625000	0.00000
2	0.750000	0.440000	4.312500	7.469469
3	0.750000	0.440000	-4.312500	7.469469
4	0.750000	0.440000	-8.625000	0.00000
5	0.750000	0.440000	-4.312500	-7.469469
6	0.750000	0.440000	4.312500	-7.469469

NOTE: The positions of the above rebars were computed by LPile

Minimum spacing between any two bars not equal to zero = 7.875 inches
between bars 4 and 5.

Ratio of bar spacing to maximum aggregate size = 10.50

Concrete Properties:

Compressive Strength of Concrete = 3000. psi
Modulus of Elasticity of Concrete = 3122019. psi
Modulus of Rupture of Concrete = -410.791918 psi
Compression Strain at Peak Stress = 0.001634
Tensile Strain at Fracture of Concrete = -0.0001160
Maximum Coarse Aggregate Size = 0.750000 in

Number of Axial Thrust Force Values Determined from Pile-head Loadings = 1

Number	Axial Thrust Force kips
1	0.000

Definitions of Run Messages and Notes:

C = concrete in section has cracked in tension.
Y = stress in reinforcing steel has reached yield stress.
T = ACI 318 criteria for tension-controlled section met, tensile strain in reinforcement exceeds 0.005 while simultaneously compressive strain in concrete more than 0.003. See ACI 318, Section 10.3.4.
Z = depth of tensile zone in concrete section is less than 10 percent of section depth.

Bending Stiffness (EI) = Computed Bending Moment / Curvature.
Position of neutral axis is measured from edge of compression side of pile.
Compressive stresses and strains are positive in sign.
Tensile stresses and strains are negative in sign.

Axial Thrust Force = 0.000 kips

Bending Max Conc Curvature Stress rad/in. ksi	Bending Max Steel Moment Stress in-kip ksi	Bending Stiffness kip-in2	Depth to N Axis in	Max Comp Strain in/in	Max Tens Strain in/in	Run Msg
0.00000125	77.6625384	62130031.	11.9999696	0.00001500	-0.00001500	
0.0542954	-0.4306511					
0.00000250	154.8613213	61944529.	11.9999695	0.00003000	-0.00003000	
0.1080951	-0.8613022					
0.00000375	231.5963486	61759026.	11.9999694	0.00004500	-0.00004500	
0.1613989	-1.2919533					
0.00000500	307.8676204	61573524.	11.9999692	0.00006000	-0.00006000	
0.2142068	-1.7226044					
0.00000625	383.6751365	61388022.	11.9999691	0.00007500	-0.00007500	
0.2665189	-2.1532556					
0.00000750	459.0188972	61202520.	11.9999690	0.00009000	-0.00009000	
0.3183352	-2.5839067					
0.00000875	533.8989022	61017017.	11.9999688	0.0001050	-0.0001050	
0.3696557	-3.0145579					
0.00001000	533.8989022	53389890.	5.0922224	0.00005092	-0.0001891	
0.1798485	-5.4484557	C				
0.00001125	533.8989022	47457680.	5.0940859	0.00005731	-0.0002127	
0.2020131	-6.1289044	C				
0.00001250	533.8989022	42711912.	5.0959541	0.00006370	-0.0002363	
0.2241068	-6.8092166	C				
0.00001375	533.8989022	38829011.	5.0978270	0.00007010	-0.0002599	

```
 0.2461297    -7.4893914 C
0.00001500   533.8989022     35593260.     5.0997047    0.00007650    -0.0002835
 0.2680816    -8.1694284 C
0.00001625   533.8989022     32855317.     5.1015873    0.00008290    -0.0003071
 0.2899622    -8.8493270 C
0.00001750   533.8989022     30508509.     5.1034746    0.00008931    -0.0003307
 0.3117716    -9.5290866 C
0.00001875   533.8989022     28474608.     5.1053669    0.00009573    -0.0003543
 0.3335094   -10.2087067 C
0.00002000   533.8989022     26694945.     5.1072640     0.0001021    -0.0003779
 0.3551757   -10.8881868 C
0.00002125   533.8989022     25124654.     5.1091660     0.0001086    -0.0004014
 0.3767703   -11.5675264 C
0.00002250   533.8989022     23728840.     5.1110730     0.0001150    -0.0004250
 0.3982929   -12.2467248 C
0.00002375   533.8989022     22479954.     5.1129849     0.0001214    -0.0004486
 0.4197436   -12.9257816 C
0.00002500   533.8989022     21355956.     5.1149018     0.0001279    -0.0004721
 0.4411221   -13.6046961 C
0.00002625   533.8989022     20339006.     5.1168237     0.0001343    -0.0004957
 0.4624283   -14.2834679 C
0.00002750   533.8989022     19414506.     5.1187507     0.0001408    -0.0005192
 0.4836620   -14.9620963 C
0.00002875   533.8989022     18570397.     5.1206827     0.0001472    -0.0005428
 0.5048232   -15.6405807 C
0.00003000   533.8989022     17796630.     5.1226199     0.0001537    -0.0005663
 0.5259116   -16.3189207 C
0.00003125   533.8989022     17084765.     5.1245621     0.0001601    -0.0005899
 0.5469272   -16.9971155 C
0.00003250   533.8989022     16427659.     5.1265095     0.0001666    -0.0006134
 0.5678697   -17.6751647 C
0.00003375   533.8989022     15819227.     5.1284621     0.0001731    -0.0006369
 0.5887391   -18.3530677 C
0.00003500   533.8989022     15254254.     5.1304199     0.0001796    -0.0006604
 0.6095351   -19.0308238 C
0.00003625   533.8989022     14728246.     5.1323829     0.0001860    -0.0006840
 0.6302577   -19.7084324 C
0.00003750   533.8989022     14237304.     5.1343512     0.0001925    -0.0007075
 0.6509066   -20.3858930 C
0.00003875   533.8989022     13778036.     5.1363247     0.0001990    -0.0007310
 0.6714818   -21.0632050 C
0.00004000   533.8989022     13347473.     5.1383036     0.0002055    -0.0007545
 0.6919831   -21.7403677 C
0.00004125   533.8989022     12943004.     5.1402878     0.0002120    -0.0007780
 0.7124102   -22.4173806 C
0.00004250   533.8989022     12562327.     5.1422775     0.0002185    -0.0008015
 0.7327632   -23.0942430 C
0.00004375   533.8989022     12203403.     5.1442725     0.0002251    -0.0008249
```

```
 0.7530417   -23.7709542 C
0.00004500   533.8989022     11864420.     5.1462729     0.0002316    -0.0008484
 0.7732458   -24.4475138 C
0.00004625   533.8989022     11543760.     5.1482789     0.0002381    -0.0008719
 0.7933751   -25.1239209 C
0.00004750   533.8989022     11239977.     5.1502903     0.0002446    -0.0008954
 0.8134296   -25.8001751 C
0.00004875   533.8989022     10951772.     5.1523072     0.0002512    -0.0009188
 0.8334090   -26.4762756 C
0.00005125   533.8989022     10417540.     5.1563578     0.0002643    -0.0009657
 0.8731423   -27.8280134 C
0.00005375   533.8989022      9933003.     5.1604079     0.0002774    -0.0010126
 0.9125699   -29.1791640 C
0.00005625   533.8989022      9491536.     5.1642849     0.0002905    -0.0010595
 0.9516604   -30.5300105 C
0.00005875   533.8989022      9087641.     5.1681825     0.0003036    -0.0011064
 0.9904433   -31.8802594 C
0.00006125   533.8989022      8716717.     5.1721008     0.0003168    -0.0011532
 1.0289175   -33.2299061 C
0.00006375   533.8989022      8374885.     5.1760403     0.0003300    -0.0012000
 1.0670814   -34.5789458 C
0.00006625   533.8989022      8058851.     5.1800010     0.0003432    -0.0012468
 1.1049339   -35.9273733 C
0.00006875   547.2194248      7959555.     5.1839833     0.0003564    -0.0012936
 1.1424736   -37.2751836 C
0.00007125   566.7893337      7954938.     5.1879874     0.0003696    -0.0013404
 1.1796992   -38.6223715 C
0.00007375   586.3345459      7950299.     5.1920135     0.0003829    -0.0013871
 1.2166093   -39.9689317 C
0.00007625   605.8548803      7945638.     5.1960618     0.0003962    -0.0014338
 1.2532025   -41.3148588 C
0.00007875   625.3501532      7940954.     5.2001327     0.0004095    -0.0014805
 1.2894774   -42.6601476 C
0.00008125   644.8201780      7936248.     5.2042263     0.0004228    -0.0015272
 1.3254326   -44.0047923 C
0.00008375   664.2647657      7931520.     5.2083430     0.0004362    -0.0015738
 1.3610668   -45.3487876 C
0.00008625   683.6837244      7926768.     5.2124830     0.0004496    -0.0016204
 1.3963784   -46.6921276 C
0.00008875   703.0768594      7921993.     5.2166466     0.0004630    -0.0016670
 1.4313659   -48.0348066 C
0.00009125   722.4439732      7917194.     5.2208341     0.0004764    -0.0017136
 1.4660280   -49.3768187 C
0.00009375   741.7848653      7912372.     5.2250457     0.0004898    -0.0017602
 1.5003630   -50.7181580 C
0.00009625   761.0993321      7907526.     5.2292817     0.0005033    -0.0018067
 1.5343696   -52.0588184 C
0.00009875   780.3871670      7902655.     5.2335425     0.0005168    -0.0018532
```

```
1.5680460   -53.3987938 C
0.0001013   799.6481604      7897760.     5.2378283     0.0005303    -0.0018997
1.6013909   -54.7380779 C
0.0001038   818.8820994      7892840.     5.2421394     0.0005439    -0.0019461
1.6344025   -56.0766643 C
0.0001063   838.0887676      7887894.     5.2464761     0.0005574    -0.0019926
1.6670793   -57.4145467 C
0.0001088   857.2679455      7882924.     5.2508389     0.0005710    -0.0020390
1.6994197   -58.7517184 C
0.0001113   876.4194101      7877927.     5.2552278     0.0005846    -0.0020854
1.7314220   -60.0000000 CY
0.0001138   895.5429349      7872905.     5.2596434     0.0005983    -0.0021317
1.7630845   -60.0000000 CY
0.0001163   914.6382897      7867856.     5.2640859     0.0006119    -0.0021781
1.7944056   -60.0000000 CY
0.0001188   933.7052407      7862781.     5.2685557     0.0006256    -0.0022244
1.8253836   -60.0000000 CY
0.0001213   952.7435504      7857679.     5.2730531     0.0006394    -0.0022706
1.8560166   -60.0000000 CY
0.0001238   971.7529772      7852549.     5.2775784     0.0006531    -0.0023169
1.8863029   -60.0000000 CY
0.0001263   990.7332758      7847392.     5.2821321     0.0006669    -0.0023631
1.9162408   -60.0000000 CY
0.0001288         1010.      7842207.     5.2867145     0.0006807    -0.0024093
1.9458285   -60.0000000 CY
0.0001313         1029.      7836994.     5.2913260     0.0006945    -0.0024555
1.9750640   -60.0000000 CY
0.0001338         1047.      7831752.     5.2959669     0.0007083    -0.0025017
2.0039455   -60.0000000 CY
0.0001363         1066.      7826482.     5.3006376     0.0007222    -0.0025478
2.0324712   -60.0000000 CY
0.0001388         1085.      7821182.     5.3053386     0.0007361    -0.0025939
2.0606390   -60.0000000 CY
0.0001413         1104.      7815852.     5.3100702     0.0007500    -0.0026400
2.0884471   -60.0000000 CY
0.0001438         1122.      7805034.     5.3135183     0.0007638    -0.0026862
2.1155168   -60.0000000 CY
0.0001463         1137.      7771109.     5.3113513     0.0007768    -0.0027332
2.1405986   -60.0000000 CY
0.0001488         1146.      7702820.     5.3006342     0.0007885    -0.0027815
2.1628328   -60.0000000 CY
0.0001588         1167.      7353623.     5.2376242     0.0008315    -0.0029785
2.2419782   -60.0000000 CY
0.0001688         1188.      7041193.     5.1823711     0.0008745    -0.0031755
2.3172799   -60.0000000 CY
0.0001788         1209.      6762452.     5.1326568     0.0009175    -0.0033725
2.3884525   -60.0000000 CY
0.0001888         1229.      6512132.     5.0879554     0.0009604    -0.0035696
```

```
2.4556330   -60.0000000 CY
0.0001988         1249.      6286223.     5.0488902     0.0010035    -0.0037665
2.5192384   -60.0000000 CY
0.0002088         1269.      6081199.     5.0146799     0.0010468    -0.0039632
2.5792130   -60.0000000 CY
0.0002188         1289.      5894178.     4.9846874     0.0010904    -0.0041596
2.6354986   -60.0000000 CY
0.0002288         1309.      5722780.     4.9583884     0.0011342    -0.0043558
2.6880351   -60.0000000 CY
0.0002388         1329.      5565025.     4.9353480     0.0011783    -0.0045517
2.7367596   -60.0000000 CY
0.0002488         1348.      5419207.     4.9148193     0.0012226    -0.0047474
2.7815118   -60.0000000 CY
0.0002588         1367.      5283863.     4.8958371     0.0012668    -0.0049432
2.8220882   -60.0000000 CY
0.0002688         1386.      5157926.     4.8793413     0.0013113    -0.0051387
2.8587304   -60.0000000 CY
0.0002788         1405.      5038579.     4.8639816     0.0013558    -0.0053342
2.8911427   -60.0000000 CY
0.0002888         1419.      4913529.     4.8420997     0.0013982    -0.0055318
2.9180126   -60.0000000 CY
0.0002988         1426.      4773104.     4.8069474     0.0014361    -0.0057339
2.9387926   -60.0000000 CY
0.0003088         1429.      4627643.     4.7651158     0.0014712    -0.0059388
2.9553100   -60.0000000 CY
0.0003188         1431.      4488912.     4.7248715     0.0015061    -0.0061439
2.9691121   -60.0000000 CY
0.0003288         1433.      4358444.     4.6875872     0.0015410    -0.0063490
2.9804222   -60.0000000 CY
0.0003388         1435.      4234965.     4.6502832     0.0015753    -0.0065547
2.9889981   -60.0000000 CY
0.0003488         1436.      4118274.     4.6148839     0.0016094    -0.0067606
2.9951077   -60.0000000 CY
0.0003588         1438.      4007935.     4.5819340     0.0016438    -0.0069662
2.9987876   -60.0000000 CY
0.0003688         1439.      3903429.     4.5512447     0.0016783    -0.0071717
2.9999038   -60.0000000 CY
0.0003788         1441.      3804254.     4.5227197     0.0017130    -0.0073770
2.9963566   -60.0000000 CY
0.0003888         1442.      3710046.     4.4960965     0.0017479    -0.0075821
2.9992603   -60.0000000 CY
0.0003988         1444.      3620415.     4.4712684     0.0017829    -0.0077871
2.9987932   -60.0000000 CY
0.0004088         1445.      3534994.     4.4481754     0.0018182    -0.0079918
2.9958692   -60.0000000 CY
0.0004188         1446.      3453339.     4.4250091     0.0018530    -0.0081970
2.9988606   -60.0000000 CY
0.0004288         1447.      3375277.     4.4024019     0.0018875    -0.0084025
```

```
    2.9999879   -60.0000000 CY
    0.0004388         1448.      3300623.     4.3813412     0.0019223    -0.0086077
    2.9947023   -60.0000000 CY
    0.0004488         1449.      3229211.     4.3615569     0.0019572    -0.0088128
    2.9968110   -60.0000000 CY
    0.0004588         1450.      3160836.     4.3429510     0.0019923    -0.0090177
    2.9992058   -60.0000000 CY
    0.0004688         1451.      3095301.     4.3254568     0.0020276    -0.0092224
    2.9999482   -60.0000000 CY
    0.0004788         1452.      3032370.     4.3091762     0.0020630    -0.0094270
    2.9943274   -60.0000000 CY
    0.0004888         1453.      2971956.     4.2938242     0.0020986    -0.0096314
    2.9955660   -60.0000000 CY
    0.0004988         1453.      2913906.     4.2793501     0.0021343    -0.0098357
    2.9983866    60.0000000 CY
    0.0005088         1454.      2858079.     4.2657076     0.0021702    -0.0100398
    2.9998150    60.0000000 CY
    0.0005188         1455.      2804318.     4.2529449     0.0022062    -0.0102438
    2.9974230    60.0000000 CY
    0.0005288         1455.      2752515.     4.2409838     0.0022424    -0.0104476
    2.9921460    60.0000000 CY
    0.0005388         1456.      2702591.     4.2296800     0.0022787    -0.0106513
    2.9951076    60.0000000 CY
    0.0005488         1457.      2654443.     4.2190018     0.0023152    -0.0108548
    2.9979472    60.0000000 CY
    0.0006088         1459.      2397517.     4.1616680     0.0025334    -0.0120766
    2.9972127    60.0000000 CY
    0.0006688         1462.      2185445.     4.1189656     0.0027546    -0.0132954
    2.9923018    60.0000000 CY
    0.0007288         1463.      2007494.     4.0887210     0.0029797    -0.0145103
    2.9928657    60.0000000 CY
    0.0007888         1464.      1855993.     4.0676900     0.0032084    -0.0157216
    2.9986837    60.0000000 CYT
    0.0008488         1464.      1725394.     4.0538071     0.0034407    -0.0169293
    2.9842843    60.0000000 CYT
    0.0009088         1465.      1611691.     4.0449233     0.0036758    -0.0181342
    2.9990094    60.0000000 CYT
    0.0009688         1465.      1511870.     4.0674863     0.0039404    -0.0193096
    2.9796834    60.0000000 CYT


--------------------------------------------------------------------------------
   Summary of Results for Nominal (Unfactored) Moment Capacity for Section 1
--------------------------------------------------------------------------------

Moment values interpolated at maximum compressive strain = 0.003
or maximum developed moment if pile fails at smaller strains.
```

Load No.	Axial Thrust kips	Nominal Mom. Cap. in-kip	Max. Comp. Strain
1	0.000	1463.046	0.00300000

Note that the values of moment capacity in the table above are not factored by a strength reduction factor (phi-factor).

In ACI 318, the value of the strength reduction factor depends on whether the transverse reinforcing steel bars are tied hoops (0.65) or spirals (0.70).

The above values should be multiplied by the appropriate strength reduction factor to compute ultimate moment capacity according to ACI 318, Section 9.3.2.2 or the value required by the design standard being followed.

The following table presents factored moment capacities and corresponding bending stiffnesses computed for common resistance factor values used for reinforced concrete sections.

Axial Load No.	Resist. Factor for Moment	Nominal Moment Cap in-kips	Ult. (Fac) Ax. Thrust kips	Ult. (Fac) Moment Cap in-kips	Bend. Stiff. at Ult Mom kip-in^2
1	0.65	1463.	0.0000	950.979765	7858151.
1	0.70	1463.	0.0000	1024.	7838227.
1	0.75	1463.	0.0000	1097.	7817753.

Layering Correction Equivalent Depths of Soil & Rock Layers

Layer No.	Top of Layer Below Pile Head ft	Equivalent Top Depth Below Grnd Surf ft	Same Layer Type As Layer Above	Layer is Rock or is Below Rock Layer	F0 Integral for Layer lbs	F1 Integral for Layer lbs
1	0.00	0.00	N.A.	No	0.00	15632.
2	6.0000	3.9392	No	No	15632.	N.A.

Notes: The F0 integral of Layer n+1 equals the sum of the F0 and F1 integrals for Layer n. Layering correction equivalent depths are computed only for soil types with both shallow-depth and deep-depth expressions for peak lateral load transfer. These soil types are soft and stiff clays,

non-liquefied sands, and cemented c-phi soil.

Computed Values of Pile Loading and Deflection
for Lateral Loading for Load Case Number 1

Pile-head conditions are Shear and Moment (Loading Type 1)

Shear force at pile head = 4030.0 lbs
Applied moment at pile head = 201600.0 in-lbs
Axial thrust load on pile head = 0.0 lbs

Depth X	Deflect. y	Bending Moment	Shear Force	Slope S	Total Stress	Bending Stiffness	Soil Res. Es*h	Soil Spr. Lat. Load	Distrib. p
feet	inches	in-lbs	lbs	radians	psi*	in-lb^2	lb/inch	lb/inch	lb/inch
0.00	0.2687	201600.	4030.	-0.00294	0.00	6.18E+10	0.00	0.00	0.00
0.10000	0.2652	206436.	4029.	-0.00293	0.00	6.18E+10	-2.3499	10.6343	0.00
0.2000	0.2617	211269.	4024.	-0.00293	0.00	6.18E+10	-4.6374	21.2685	0.00
0.3000	0.2581	216095.	4017.	-0.00292	0.00	6.18E+10	-6.8628	31.9028	0.00
0.4000	0.2546	220911.	4008.	-0.00292	0.00	6.18E+10	-9.0261	42.5370	0.00
0.5000	0.2511	225714.	3996.	-0.00292	0.00	6.18E+10	-11.1276	53.1713	0.00
0.6000	0.2476	230501.	3981.	-0.00291	0.00	6.18E+10	-13.1672	63.8055	0.00
0.7000	0.2441	235269.	3964.	-0.00291	0.00	6.17E+10	-15.1452	74.4398	0.00
0.8000	0.2407	240015.	3945.	-0.00290	0.00	6.17E+10	-17.0618	85.0740	0.00
0.9000	0.2372	244737.	3923.	-0.00290	0.00	6.17E+10	-18.9170	95.7083	0.00
1.0000	0.2337	249431.	3900.	-0.00289	0.00	6.17E+10	-20.7110	106.3426	0.00
1.1000	0.2302	254096.	3874.	-0.00289	0.00	6.17E+10	-22.4441	116.9768	0.00

1.2000	0.2268	258728.	3846.	-0.00288	0.00	6.17E+10
-24.1163	127.6111	0.00				
1.3000	0.2233	263326.	3816.	-0.00288	0.00	6.17E+10
-25.7279	138.2453	0.00				
1.4000	0.2199	267886.	3784.	-0.00287	0.00	6.17E+10
-27.2790	148.8796	0.00				
1.5000	0.2164	272408.	3750.	-0.00287	0.00	6.16E+10
-28.7698	159.5138	0.00				
1.6000	0.2130	276887.	3715.	-0.00286	0.00	6.16E+10
-30.2004	170.1481	0.00				
1.7000	0.2096	281324.	3678.	-0.00286	0.00	6.16E+10
-31.5712	180.7823	0.00				
1.8000	0.2061	285715.	3639.	-0.00285	0.00	6.16E+10
-32.8821	191.4166	0.00				
1.9000	0.2027	290058.	3599.	-0.00284	0.00	6.16E+10
-34.1335	202.0509	0.00				
2.0000	0.1993	294352.	3557.	-0.00284	0.00	6.16E+10
-35.3255	212.6851	0.00				
2.1000	0.1959	298596.	3514.	-0.00283	0.00	6.16E+10
-36.4584	223.3194	0.00				
2.2000	0.1925	302787.	3470.	-0.00283	0.00	6.16E+10
-37.5323	233.9536	0.00				
2.3000	0.1891	306924.	3424.	-0.00282	0.00	6.16E+10
-38.5475	244.5879	0.00				
2.4000	0.1857	311005.	3378.	-0.00282	0.00	6.16E+10
-39.5040	255.2221	0.00				
2.5000	0.1824	315030.	3330.	-0.00281	0.00	6.16E+10
-40.4023	265.8564	0.00				
2.6000	0.1790	318996.	3281.	-0.00280	0.00	6.15E+10
-41.2424	276.4906	0.00				
2.7000	0.1756	322903.	3231.	-0.00280	0.00	6.15E+10
-42.0247	287.1249	0.00				
2.8000	0.1723	326750.	3180.	-0.00279	0.00	6.15E+10
-42.7492	297.7592	0.00				
2.9000	0.1689	330535.	3128.	-0.00278	0.00	6.15E+10
-43.4163	308.3934	0.00				
3.0000	0.1656	334257.	3076.	-0.00278	0.00	6.15E+10
-44.0262	319.0277	0.00				
3.1000	0.1623	337916.	3022.	-0.00277	0.00	6.15E+10
-44.5790	329.6619	0.00				
3.2000	0.1590	341511.	2969.	-0.00276	0.00	6.15E+10
-45.0751	340.2962	0.00				
3.3000	0.1556	345041.	2914.	-0.00276	0.00	6.15E+10
-45.5147	350.9304	0.00				
3.4000	0.1523	348505.	2859.	-0.00275	0.00	6.15E+10
-45.8980	361.5647	0.00				
3.5000	0.1490	351903.	2804.	-0.00274	0.00	6.15E+10
-46.2252	372.1989	0.00				

3.6000	0.1457	355235.	2749.	-0.00274	0.00	6.14E+10
-46.4966	382.8332	0.00				
3.7000	0.1425	358500.	2693.	-0.00273	0.00	6.14E+10
-46.7124	393.4675	0.00				
3.8000	0.1392	361697.	2636.	-0.00272	0.00	6.14E+10
-46.8730	404.1017	0.00				
3.9000	0.1359	364827.	2580.	-0.00272	0.00	6.14E+10
-46.9784	414.7360	0.00				
4.0000	0.1327	367890.	2524.	-0.00271	0.00	6.14E+10
-47.0291	425.3702	0.00				
4.1000	0.1294	370884.	2467.	-0.00270	0.00	6.14E+10
-47.0251	436.0045	0.00				
4.2000	0.1262	373811.	2411.	-0.00269	0.00	6.14E+10
-46.9669	446.6387	0.00				
4.3000	0.1230	376670.	2355.	-0.00269	0.00	6.14E+10
-46.8546	457.2730	0.00				
4.4000	0.1197	379462.	2298.	-0.00268	0.00	6.14E+10
-46.6885	467.9072	0.00				
4.5000	0.1165	382187.	2243.	-0.00267	0.00	6.14E+10
-46.4689	478.5415	0.00				
4.6000	0.1133	384844.	2187.	-0.00267	0.00	6.14E+10
-46.1961	489.1758	0.00				
4.7000	0.1101	387436.	2132.	-0.00266	0.00	6.14E+10
-45.8702	499.8100	0.00				
4.8000	0.1069	389961.	2077.	-0.00265	0.00	6.14E+10
-45.4916	510.4443	0.00				
4.9000	0.1038	392420.	2023.	-0.00264	0.00	6.14E+10
-45.0605	521.0785	0.00				
5.0000	0.1006	394815.	1969.	-0.00263	0.00	6.14E+10
-44.5773	531.7128	0.00				
5.1000	0.09745	397145.	1916.	-0.00263	0.00	6.13E+10
-44.0421	542.3470	0.00				
5.2000	0.09430	399412.	1863.	-0.00262	0.00	6.13E+10
-43.4552	552.9813	0.00				
5.3000	0.09116	401617.	1811.	-0.00261	0.00	6.13E+10
-42.8170	563.6155	0.00				
5.4000	0.08803	403760.	1760.	-0.00260	0.00	6.13E+10
-42.1277	574.2498	0.00				
5.5000	0.08491	405842.	1710.	-0.00260	0.00	6.13E+10
-41.3875	584.8841	0.00				
5.6000	0.08180	407865.	1661.	-0.00259	0.00	6.13E+10
-40.5968	595.5183	0.00				
5.7000	0.07870	409829.	1613.	-0.00258	0.00	6.13E+10
-39.7558	606.1526	0.00				
5.8000	0.07561	411735.	1566.	-0.00257	0.00	6.13E+10
-38.8648	616.7868	0.00				
5.9000	0.07253	413586.	1520.	-0.00256	0.00	6.13E+10
-37.9240	627.4211	0.00				

6.0000	0.06946	415383.	1221.	-0.00256	0.00	6.13E+10
-460.2326	7951.	0.00				
6.1000	0.06640	416516.	529.6543	-0.00255	0.00	6.13E+10
-691.6213	12499.	0.00				
6.2000	0.06335	416654.	-305.9399	-0.00254	0.00	6.13E+10
-701.0356	13279.	0.00				
6.3000	0.06031	415782.	-1152.	-0.00253	0.00	6.13E+10
-709.5235	14118.	0.00				
6.4000	0.05728	413888.	-2008.	-0.00252	0.00	6.13E+10
-716.9955	15022.	0.00				
6.5000	0.05425	410962.	-2872.	-0.00251	0.00	6.13E+10
-723.3542	16000.	0.00				
6.6000	0.05124	406995.	-3744.	-0.00251	0.00	6.13E+10
-728.4925	17061.	0.00				
6.7000	0.04824	401978.	-4620.	-0.00250	0.00	6.13E+10
-732.2923	18217.	0.00				
6.8000	0.04524	395907.	-5500.	-0.00249	0.00	6.14E+10
-734.6215	19484.	0.00				
6.9000	0.04226	388778.	-6382.	-0.00248	0.00	6.14E+10
-735.3315	20880.	0.00				
7.0000	0.03928	380590.	-7264.	-0.00248	0.00	6.14E+10
-734.2529	22429.	0.00				
7.1000	0.03632	371344.	-8143.	-0.00247	0.00	6.14E+10
-731.1903	24160.	0.00				
7.2000	0.03336	361046.	-9002.	-0.00246	0.00	6.14E+10
-699.5006	25161.	0.00				
7.3000	0.03041	349741.	-9811.	-0.00245	0.00	6.15E+10
-650.0717	25651.	0.00				
7.4000	0.02747	337499.	-10560.	-0.00245	0.00	6.15E+10
-598.4149	26141.	0.00				
7.5000	0.02454	324396.	-11246.	-0.00244	0.00	6.15E+10
-544.5337	26630.	0.00				
7.6000	0.02161	310508.	-11866.	-0.00243	0.00	6.16E+10
-488.4307	27120.	0.00				
7.7000	0.01869	295918.	-12417.	-0.00243	0.00	6.16E+10
-430.1077	27609.	0.00				
7.8000	0.01578	280708.	-12897.	-0.00242	0.00	6.16E+10
-369.5655	28099.	0.00				
7.9000	0.01288	264965.	-13303.	-0.00242	0.00	6.17E+10
-306.8039	28589.	0.00				
8.0000	0.00998	248781.	-13632.	-0.00241	0.00	6.17E+10
-241.8221	29078.	0.00				
8.1000	0.00709	232249.	-13882.	-0.00241	0.00	6.18E+10
-174.6181	29568.	0.00				
8.2000	0.00420	215465.	-14050.	-0.00240	0.00	6.18E+10
-105.1894	30057.	0.00				
8.3000	0.00132	198530.	-14133.	-0.00240	0.00	6.18E+10
-33.5324	30547.	0.00				

8.4000	-0.00156	181546.	-14129.	-0.00240	0.00	6.19E+10
40.3568	31037.	0.00				
8.5000	-0.00443	164621.	-14035.	-0.00239	0.00	6.19E+10
116.4832	31526.	0.00				
8.6000	-0.00730	147863.	-13848.	-0.00239	0.00	6.20E+10
194.8521	32016.	0.00				
8.7000	-0.01017	131386.	-13566.	-0.00239	0.00	6.20E+10
275.4695	32505.	0.00				
8.8000	-0.01303	115306.	-13185.	-0.00238	0.00	6.20E+10
358.3417	32995.	0.00				
8.9000	-0.01589	99741.	-12704.	-0.00238	0.00	6.20E+10
443.4755	33485.	0.00				
9.0000	-0.01875	84816.	-12120.	-0.00238	0.00	6.21E+10
530.8778	33974.	0.00				
9.1000	-0.02161	70654.	-11429.	-0.00238	0.00	6.21E+10
620.5559	34464.	0.00				
9.2000	-0.02446	57387.	-10629.	-0.00238	0.00	6.21E+10
712.5168	34953.	0.00				
9.3000	-0.02731	45145.	-9717.	-0.00238	0.00	6.21E+10
806.7677	35443.	0.00				
9.4000	-0.03017	34065.	-8691.	-0.00238	0.00	6.21E+10
903.3155	35933.	0.00				
9.5000	-0.03302	24286.	-7548.	-0.00238	0.00	6.21E+10
1002.	36422.	0.00				
9.6000	-0.03587	15950.	-6285.	-0.00238	0.00	6.21E+10
1103.	36912.	0.00				
9.7000	-0.03872	9202.	-4899.	-0.00238	0.00	6.21E+10
1207.	37401.	0.00				
9.8000	-0.04157	4193.	-3387.	-0.00238	0.00	6.21E+10
1313.	37891.	0.00				
9.9000	-0.04442	1074.	-1747.	-0.00238	0.00	6.21E+10
1421.	38381.	0.00				
10.0000	-0.04727	0.00	0.00	-0.00238	0.00	6.21E+10
1491.	18925.	0.00				

* This analysis computed pile response using nonlinear moment-curvature relationships. Values of total stress due to combined axial and bending stresses are computed only for elastic sections only and do not equal the actual stresses in concrete and steel. Stresses in concrete and steel may be interpolated from the output for nonlinear bending properties relative to the magnitude of bending moment developed in the pile.

Output Summary for Load Case No. 1:

Pile-head deflection = 0.26868849 inches
Computed slope at pile head = -0.00293605 radians
Maximum bending moment = 416654. inch-lbs

```
Maximum shear force              =        -14133. lbs
Depth of maximum bending moment  =     6.20000000 feet below pile head
Depth of maximum shear force     =     8.30000000 feet below pile head
Number of iterations             =              9
Number of zero deflection points =              1


--------------------------------------------------------------------------------
            Summary of Pile-head Responses for Conventional Analyses
--------------------------------------------------------------------------------

Definitions of Pile-head Loading Conditions:

Load Type 1: Load 1 = Shear, V, lbs, and Load 2 = Moment, M, in-lbs
Load Type 2: Load 1 = Shear, V, lbs, and Load 2 = Slope, S, radians
Load Type 3: Load 1 = Shear, V, lbs, and Load 2 = Rot. Stiffness, R, in-lbs/rad.
Load Type 4: Load 1 = Top Deflection, y, inches, and Load 2 = Moment, M, in-lbs
Load Type 5: Load 1 = Top Deflection, y, inches, and Load 2 = Slope, S, radians


Load Load                Load                  Axial    Pile-head  Pile-head  Max
Shear Max Moment
Case Type   Pile-head    Type     Pile-head   Loading  Deflection  Rotation    in
Pile    in Pile
 No.  1      Load 1       2        Load 2       lbs      inches     radians
lbs      in-lbs
---- ----- ---------- ---------- ---------- ---------- ---------- ----------
---------- ----------
  1  V, lb      4030.  M, in-lb     201600.       0.00     0.2687   -0.00294
-14133.    416654.


Maximum pile-head deflection = 0.2686884877 inches
Maximum pile-head rotation   = -0.0029360496 radians = -0.168223 deg.

The analysis ended normally.
```

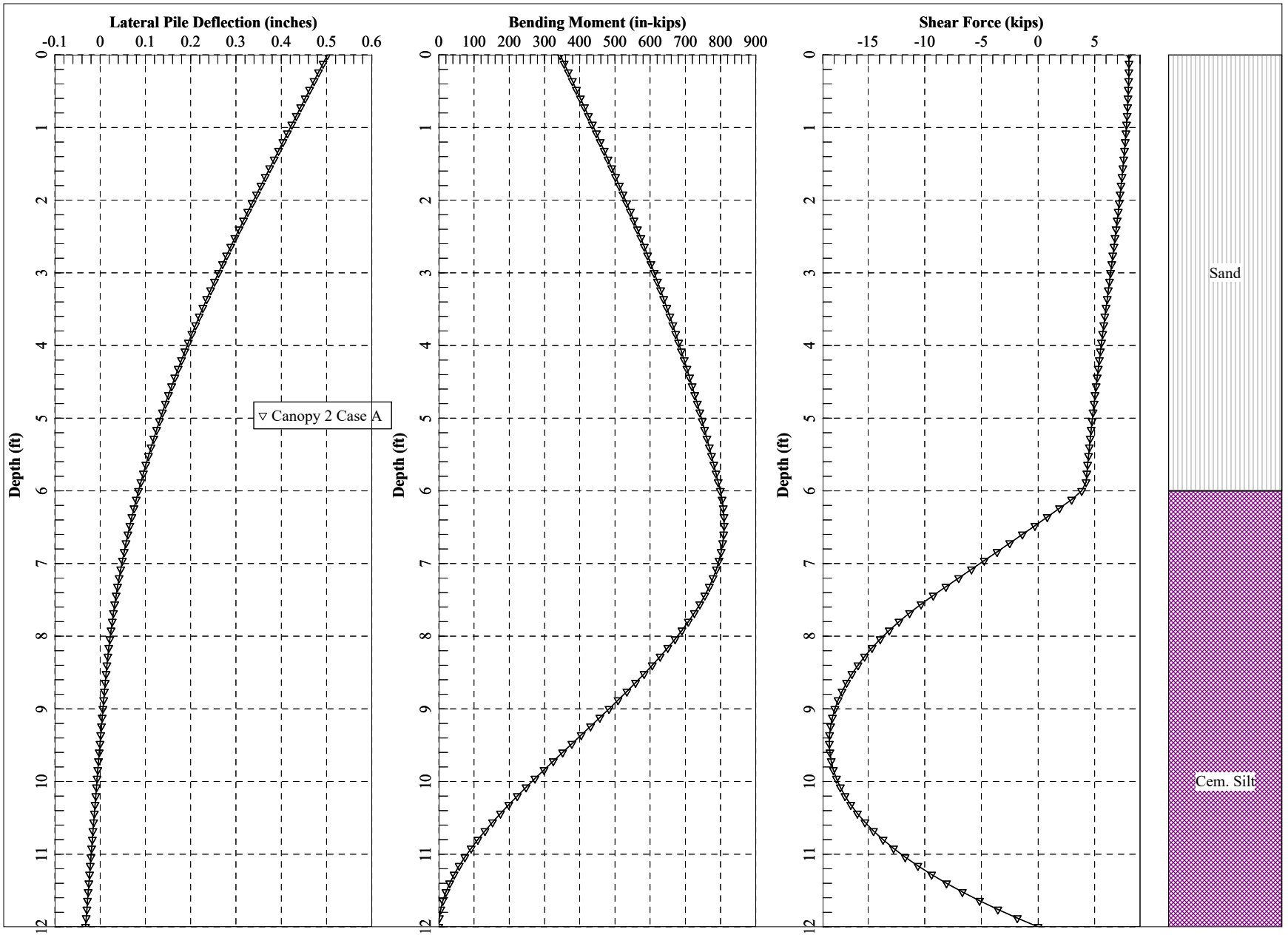
Lateral Pile Deflection (inches)
-0.1 0 0.1 0.2 0.3 0.4 0.5 0.6
Depth (ft)
0 1 2 3 4 5 6 7 8 9 10 11 12
Canopy 2 Case A
Bending Moment (in-kips)
0 100 200 300 400 500 600 700 800 900
Depth (ft)
0 1 2 3 4 5 6 7 8 9 10 11 12
Shear Force (kips)
-15 -10 -5 0 5
Depth (ft)
0 1 2 3 4 5 6 7 8 9 10 11 12
Sand
Cem. Silt

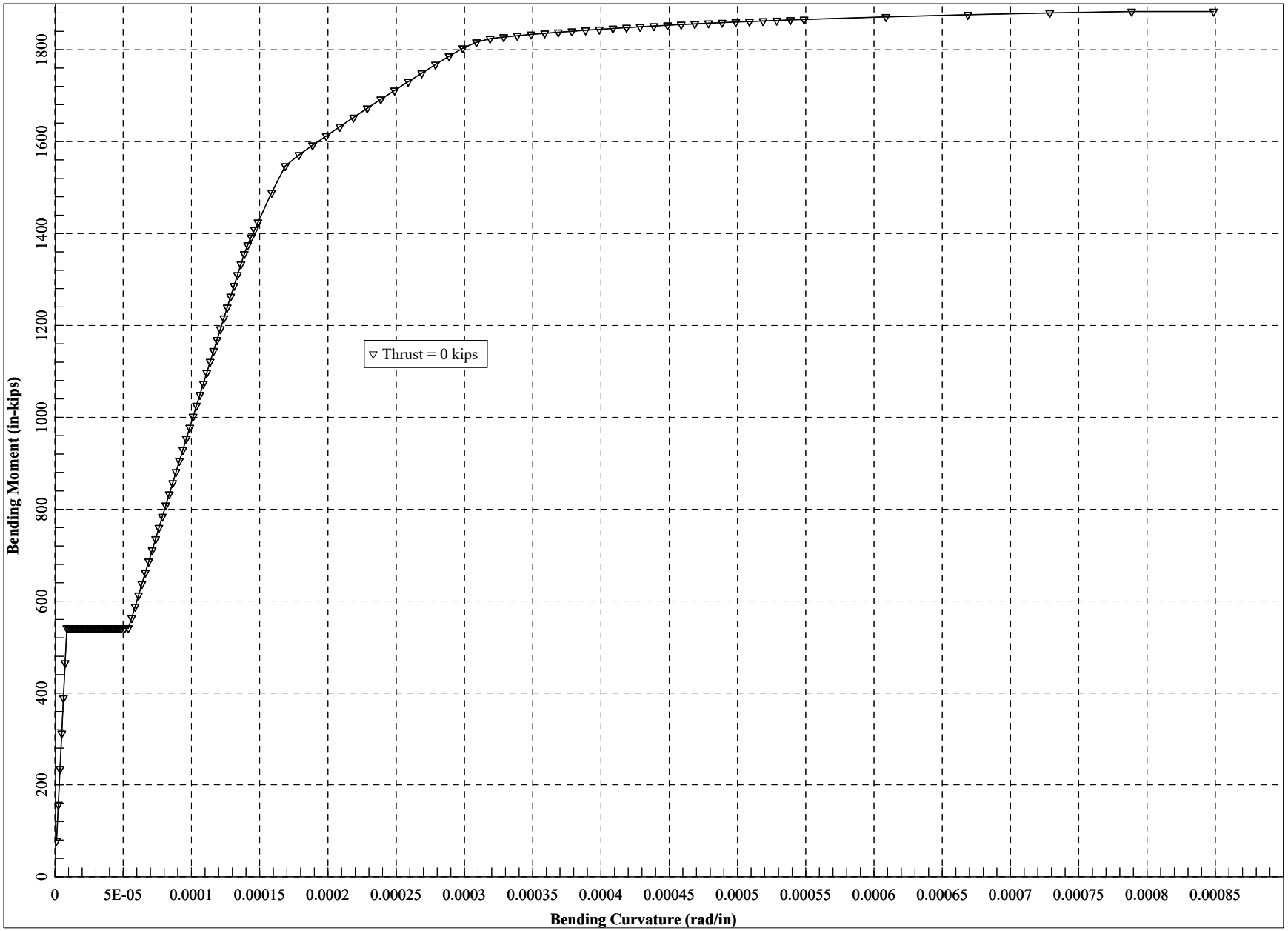
Bending Moment (in-kips)
0
200
400
600
800
1000
1200
1400
1600
1800
Thrust = 0 kips
0
5E-05
0.0001
0.00015
0.0002
0.00025
0.0003
0.00035
0.0004
0.00045
0.0005
0.00055
0.0006
0.00065
0.0007
0.00075
0.0008
0.00085
Bending Curvature (rad/in)

PV Panel Canopy 2 Case A.lp9o

LPile for Windows, Version 2016-09.010

Analysis of Individual Piles and Drilled Shafts
Subjected to Lateral Loading Using the p-y Method
© 1985-2016 by Ensoft, Inc.
All Rights Reserved

This copy of LPile is being used by:

LA City BOE
LA City BOE

Serial Number of Security Device: 225227467

This copy of LPile is licensed for exclusive use by:

L.A. Bureau of Engineering, Los

Use of this program by any entity other than L.A. Bureau of Engineering, Los
is a violation of the software license agreement.

Files Used for Analysis

Path to file locations:
\PROJECTS\2017\17-074 Granada Hills Pool Replacement\Analysis\LPILE 2018\

Name of input data file:
PV Panel Canopy 2 Case A.lp9d

Name of output report file:
PV Panel Canopy 2 Case A.lp9o

Name of plot output file:
PV Panel Canopy 2 Case A.lp9p

Name of runtime message file:
PV Panel Canopy 2 Case A.lp9r

Date and Time of Analysis

Date: October 11, 2018 Time: 10:34:46

Problem Title

Project Name: Strathern Park North Baseball Fields

Job Number: 14-090

Client:

Engineer: Easton

Description: Baseball Field Light Pole Foundations

Program Options and Settings

Computational Options:
- Use unfactored loads in computations (conventional analysis)

Engineering Units Used for Data Input and Computations:
- US Customary System Units (pounds, feet, inches)

Analysis Control Options:

- Maximum number of iterations allowed	=	500
- Deflection tolerance for convergence	=	1.0000E-05 in
- Maximum allowable deflection	=	100.0000 in
- Number of pile increments	=	100

Loading Type and Number of Cycles of Loading:
- Static loading specified

- Use of p-y modification factors for p-y curves not selected
- No distributed lateral loads are entered
- Loading by lateral soil movements acting on pile not selected
- Input of shear resistance at the pile tip not selected
- Computation of pile-head foundation stiffness matrix not selected
- Push-over analysis of pile not selected
- Buckling analysis of pile not selected

Output Options:
- Output files use decimal points to denote decimal symbols.
- Values of pile-head deflection, bending moment, shear force, and soil reaction are printed for full length of pile.
- Printing Increment (nodal spacing of output points) = 1
- No p-y curves to be computed and reported for user-specified depths
- Print using wide report formats

Pile Structural Properties and Geometry

Number of pile sections defined = 1
Total length of pile = 12.000 ft
Depth of ground surface below top of pile = 0.0000 ft

Pile diameters used for p-y curve computations are defined using 2 points.

p-y curves are computed using pile diameter values interpolated with depth over the length of the pile. A summary of values of pile diameter vs. depth follows.

Point No.	Depth Below Pile Head feet	Pile Diameter inches
1	0.000	24.0000
2	12.000	24.0000

Input Structural Properties for Pile Sections:

Pile Section No. 1:

Section 1 is a round drilled shaft, bored pile, or CIDH pile

Length of section	=	12.000000 ft
Shaft Diameter	=	24.000000 in
Shear capacity of section	=	0.0000 lbs

Ground Slope and Pile Batter Angles

Ground Slope Angle	=	0.000 degrees
	=	0.000 radians
Pile Batter Angle	=	0.000 degrees
	=	0.000 radians

Soil and Rock Layering Information

The soil profile is modelled using 2 layers

Layer 1 is sand, p-y criteria by Reese et al., 1974

Distance from top of pile to top of layer	=	0.0000 ft
Distance from top of pile to bottom of layer	=	6.000000 ft
Effective unit weight at top of layer	=	98.000000 pcf
Effective unit weight at bottom of layer	=	98.000000 pcf
Friction angle at top of layer	=	20.000000 deg.
Friction angle at bottom of layer	=	20.000000 deg.
Subgrade k at top of layer	=	0.0000 pci
Subgrade k at bottom of layer	=	0.0000 pci

NOTE: Default values for subgrade k will be computed for this layer.

Layer 2 is cemented silt with cohesion and friction

Distance from top of pile to top of layer	=	6.000000 ft
Distance from top of pile to bottom of layer	=	14.000000 ft
Effective unit weight at top of layer	=	125.000000 pcf
Effective unit weight at bottom of layer	=	125.000000 pcf
Undrained cohesion at top of layer	=	100.000000 psf
Undrained cohesion at bottom of layer	=	100.000000 psf
Friction angle at top of layer	=	31.000000 deg.
Friction angle at bottom of layer	=	31.000000 deg.

Epsilon-50 at top of layer = 0.0000
Epsilon-50 at bottom of layer = 0.0000
Subgrade k at top of layer = 0.0000 pci
Subgrade k at bottom of layer = 0.0000 pci

NOTE: Default values for Epsilon-50 will be computed for this layer.
NOTE: Default values for subgrade k will be computed for this layer.

(Depth of the lowest soil layer extends 2.000 ft below the pile tip)

Summary of Input Soil Properties

Layer Num.	Soil Type Name (p-y Curve Type)	Layer Depth ft	Effective Unit Wt. pcf	Undrained Cohesion psf	Angle of Friction deg.	E50 or kpy krm pci
1	Sand (Reese, et al.)	0.00	98.0000	--	20.0000	default
		6.0000	98.0000	--	20.0000	default
2	Cemented Silt	6.0000	125.0000	100.0000	31.0000	default
		14.0000	125.0000	100.0000	31.0000	default

Static Loading Type

Static loading criteria were used when computing p-y curves for all analyses.

Pile-head Loading and Pile-head Fixity Conditions

Number of loads specified = 1

Load No.	Load Type	Condition 1	Condition 2	Axial Thrust Force, lbs	Compute Top y vs. Pile Length
1	1	V = 8028. lbs	M = 344400. in-lbs	0.0000000	No

V = shear force applied normal to pile axis
M = bending moment applied to pile head
y = lateral deflection normal to pile axis
S = pile slope relative to original pile batter angle
R = rotational stiffness applied to pile head
Values of top y vs. pile lengths can be computed only for load types with specified shear loading (Load Types 1, 2, and 3).
Thrust force is assumed to be acting axially for all pile batter angles.

Computations of Nominal Moment Capacity and Nonlinear Bending Stiffness

---

Axial thrust force values were determined from pile-head loading conditions

Number of Pile Sections Analyzed = 1

Pile Section No. 1:

Dimensions and Properties of Drilled Shaft (Bored Pile):

Length of Section	= 12.000000	ft
Shaft Diameter	= 24.000000	in
Concrete Cover Thickness	= 3.000000	in
Number of Reinforcing Bars	= 8	bars
Yield Stress of Reinforcing Bars	= 60000.	psi
Modulus of Elasticity of Reinforcing Bars	= 29000000.	psi
Gross Area of Shaft	= 452.389342	sq. in.
Total Area of Reinforcing Steel	= 3.520000	sq. in.
Area Ratio of Steel Reinforcement	= 0.78	percent
Edge-to-Edge Bar Spacing	= 5.851289	in
Maximum Concrete Aggregate Size	= 0.750000	in
Ratio of Bar Spacing to Aggregate Size	= 7.80	
Offset of Center of Rebar Cage from Center of Pile	= 0.0000	in

Axial Structural Capacities:

Nom. Axial Structural Capacity = 0.85 Fc Ac + Fy As = 1355.817 kips
Tensile Load for Cracking of Concrete = -174.338 kips
Nominal Axial Tensile Capacity = -211.200 kips

Reinforcing Bar Dimensions and Positions Used in Computations:

Bar Number	Bar Diam. inches	Bar Area sq. in.	X inches	Y inches
1	0.750000	0.440000	8.625000	0.00000
2	0.750000	0.440000	6.098796	6.098796
3	0.750000	0.440000	0.00000	8.625000
4	0.750000	0.440000	-6.098796	6.098796
5	0.750000	0.440000	-8.625000	0.00000
6	0.750000	0.440000	-6.098796	-6.098796
7	0.750000	0.440000	0.00000	-8.625000
8	0.750000	0.440000	6.098796	-6.098796

NOTE: The positions of the above rebars were computed by LPile

Minimum spacing between any two bars not equal to zero = 5.851 inches
between bars 1 and 2.

Ratio of bar spacing to maximum aggregate size = 7.80

Concrete Properties:

Compressive Strength of Concrete = 3000. psi
Modulus of Elasticity of Concrete = 3122019. psi
Modulus of Rupture of Concrete = -410.791918 psi
Compression Strain at Peak Stress = 0.001634
Tensile Strain at Fracture of Concrete = -0.0001160
Maximum Coarse Aggregate Size = 0.750000 in

Number of Axial Thrust Force Values Determined from Pile-head Loadings = 1

Number	Axial Thrust Force kips
1	0.000

Definitions of Run Messages and Notes:

C = concrete in section has cracked in tension.
Y = stress in reinforcing steel has reached yield stress.
T = ACI 318 criteria for tension-controlled section met, tensile strain in reinforcement exceeds 0.005 while simultaneously compressive strain in concrete more than 0.003. See ACI 318, Section 10.3.4.
Z = depth of tensile zone in concrete section is less than 10 percent of section depth.

Bending Stiffness (EI) = Computed Bending Moment / Curvature.
Position of neutral axis is measured from edge of compression side of pile.
Compressive stresses and strains are positive in sign.
Tensile stresses and strains are negative in sign.

Axial Thrust Force = 0.000 kips

Bending Max Conc Curvature Stress rad/in. ksi	Bending Max Steel Moment Stress in-kip ksi	Run Msg	Bending Stiffness kip-in2	Depth to N Axis in	Max Comp Strain in/in	Max Tens Strain in/in
0.00000125	78.6995225		62959618.	11.9999616	0.00001500	-0.00001500
0.0542954	-0.4306514					
0.00000250	156.9360997		62774440.	11.9999614	0.00003000	-0.00003000
0.1080950	-0.8613028					
0.00000375	234.7097318		62589262.	11.9999613	0.00004500	-0.00004500
0.1613987	-1.2919542					
0.00000500	312.0204186		62404084.	11.9999611	0.00006000	-0.00006000
0.2142067	-1.7226056					
0.00000625	388.8681603		62218906.	11.9999609	0.00007500	-0.00007500
0.2665188	-2.1532570					
0.00000750	465.2529567		62033728.	11.9999608	0.00009000	-0.00009000
0.3183350	-2.5839085					
0.00000875	541.1748079		61848549.	11.9999606	0.0001050	-0.0001050
0.3696554	-3.0145599					
0.00001000	541.1748079		54117481.	5.5690534	0.00005569	-0.0001843
0.1968037	-5.3101745	C				
0.00001125	541.1748079		48104427.	5.5711819	0.00006268	-0.0002073
0.2210194	-5.9732519	C				
0.00001250	541.1748079		43293985.	5.5733161	0.00006967	-0.0002303

```
 0.2451490    -6.6361729 C
0.00001375   541.1748079     39358168.     5.5754560    0.00007666    -0.0002533
 0.2691924    -7.2989369 C
0.00001500   541.1748079     36078321.     5.5776016    0.00008366    -0.0002763
 0.2931493    -7.9615433 C
0.00001625   541.1748079     33303065.     5.5797529    0.00009067    -0.0002993
 0.3170197    -8.6239914 C
0.00001750   541.1748079     30924275.     5.5819100    0.00009768    -0.0003223
 0.3408033    -9.2862806 C
0.00001875   541.1748079     28862656.     5.5840729     0.0001047    -0.0003453
 0.3644999    -9.9484103 C
0.00002000   541.1748079     27058740.     5.5862417     0.0001117    -0.0003683
 0.3881095   -10.6103798 C
0.00002125   541.1748079     25467050.     5.5884163     0.0001188    -0.0003912
 0.4116317   -11.2721884 C
0.00002250   541.1748079     24052214.     5.5905968     0.0001258    -0.0004142
 0.4350664   -11.9338355 C
0.00002375   541.1748079     22786308.     5.5927833     0.0001328    -0.0004372
 0.4584135   -12.5953205 C
0.00002500   541.1748079     21646992.     5.5949757     0.0001399    -0.0004601
 0.4816728   -13.2566426 C
0.00002625   541.1748079     20616183.     5.5971741     0.0001469    -0.0004831
 0.5048440   -13.9178011 C
0.00002750   541.1748079     19679084.     5.5993786     0.0001540    -0.0005060
 0.5279269   -14.5787955 C
0.00002875   541.1748079     18823472.     5.6015891     0.0001610    -0.0005290
 0.5509215   -15.2396250 C
0.00003000   541.1748079     18039160.     5.6038057     0.0001681    -0.0005519
 0.5738275   -15.9002890 C
0.00003125   541.1748079     17317594.     5.6060285     0.0001752    -0.0005748
 0.5966447   -16.5607866 C
0.00003250   541.1748079     16651533.     5.6082574     0.0001823    -0.0005977
 0.6193730   -17.2211173 C
0.00003375   541.1748079     16034809.     5.6104926     0.0001894    -0.0006206
 0.6420121   -17.8812803 C
0.00003500   541.1748079     15462137.     5.6127339     0.0001964    -0.0006436
 0.6645619   -18.5412750 C
0.00003625   541.1748079     14928960.     5.6149816     0.0002035    -0.0006665
 0.6870221   -19.2011005 C
0.00003750   541.1748079     14431328.     5.6172356     0.0002106    -0.0006894
 0.7093926   -19.8607563 C
0.00003875   541.1748079     13965801.     5.6194959     0.0002178    -0.0007122
 0.7316732   -20.5202415 C
0.00004000   541.1748079     13529370.     5.6217626     0.0002249    -0.0007351
 0.7538636   -21.1795554 C
0.00004125   541.1748079     13119389.     5.6240357     0.0002320    -0.0007580
 0.7759638   -21.8386973 C
0.00004250   541.1748079     12733525.     5.6263152     0.0002391    -0.0007809
```

```
 0.7979734   -22.4976664 C
0.00004375   541.1748079     12369710.     5.6286013     0.0002463    -0.0008037
 0.8198923   -23.1564620 C
0.00004500   541.1748079     12026107.     5.6308939     0.0002534    -0.0008266
 0.8417203   -23.8150834 C
0.00004625   541.1748079     11701077.     5.6331931     0.0002605    -0.0008495
 0.8634571   -24.4735298 C
0.00004750   541.1748079     11393154.     5.6354988     0.0002677    -0.0008723
 0.8851027   -25.1318003 C
0.00004875   541.1748079     11101022.     5.6378112     0.0002748    -0.0008952
 0.9066567   -25.7898943 C
0.00005125   541.1748079     10559508.     5.6423472     0.0002892    -0.0009408
 0.9494724   -27.1057114 C
0.00005375   541.1748079     10068369.     5.6468109     0.0003035    -0.0009865
 0.9919021   -28.4209837 C
0.00005625   563.5066006     10017895.     5.6512997     0.0003179    -0.0010321
 1.0339589   -29.7355677 C
0.00005875   588.1552293     10011153.     5.6558137     0.0003323    -0.0010777
 1.0756409   -31.0494577 C
0.00006125   612.7681365     10004378.     5.6603534     0.0003467    -0.0011233
 1.1169466   -32.3626477 C
0.00006375   637.3450536      9997569.     5.6649189     0.0003611    -0.0011689
 1.1578743   -33.6751317 C
0.00006625   661.8857079      9990728.     5.6695106     0.0003756    -0.0012144
 1.1984222   -34.9869033 C
0.00006875   686.3898229      9983852.     5.6741287     0.0003901    -0.0012599
 1.2385885   -36.2979563 C
0.00007125   710.8571178      9976942.     5.6787737     0.0004046    -0.0013054
 1.2783717   -37.6082843 C
0.00007375   735.2873077      9969997.     5.6834459     0.0004192    -0.0013508
 1.3177698   -38.9178808 C
0.00007625   759.6801034      9963018.     5.6881454     0.0004337    -0.0013963
 1.3567810   -40.2267391 C
0.00007875   784.0352111      9956003.     5.6928728     0.0004483    -0.0014417
 1.3954036   -41.5348525 C
0.00008125   808.3523328      9948952.     5.6976283     0.0004629    -0.0014871
 1.4336357   -42.8422141 C
0.00008375   832.6311657      9941865.     5.7024123     0.0004776    -0.0015324
 1.4714754   -44.1488170 C
0.00008625   856.8714024      9934741.     5.7072251     0.0004922    -0.0015778
 1.5089208   -45.4546542 C
0.00008875   881.0727307      9927580.     5.7120671     0.0005069    -0.0016231
 1.5459700   -46.7597184 C
0.00009125   905.2348335      9920382.     5.7169387     0.0005217    -0.0016683
 1.5826210   -48.0640023 C
0.00009375   929.3573884      9913145.     5.7218401     0.0005364    -0.0017136
 1.6188719   -49.3674984 C
0.00009625   953.4400683      9905871.     5.7267719     0.0005512    -0.0017588
```

```
 1.6547206   -50.6701993 C
0.00009875   977.4825403      9898557.     5.7317344     0.0005660    -0.0018040
 1.6901652   -51.9720971 C
 0.0001013         1001.      9891205.     5.7367280     0.0005808    -0.0018492
 1.7252035   -53.2731842 C
 0.0001038         1025.      9883812.     5.7417530     0.0005957    -0.0018943
 1.7598335   -54.5734524 C
 0.0001063         1049.      9876379.     5.7468099     0.0006106    -0.0019394
 1.7940530   -55.8728937 C
 0.0001088         1073.      9868906.     5.7518992     0.0006255    -0.0019845
 1.8278599   -57.1714999 C
 0.0001113         1097.      9861391.     5.7570212     0.0006405    -0.0020295
 1.8612520   -58.4692624 C
 0.0001138         1121.      9853835.     5.7621764     0.0006554    -0.0020746
 1.8942271   -59.7661729 C
 0.0001163         1145.      9846236.     5.7673652     0.0006705    -0.0021195
 1.9267829   -60.0000000 CY
 0.0001188         1168.      9838594.     5.7725881     0.0006855    -0.0021645
 1.9589172   -60.0000000 CY
 0.0001213         1192.      9830909.     5.7778455     0.0007006    -0.0022094
 1.9906276   -60.0000000 CY
 0.0001238         1216.      9823181.     5.7831379     0.0007157    -0.0022543
 2.0219119   -60.0000000 CY
 0.0001263         1239.      9815408.     5.7884658     0.0007308    -0.0022992
 2.0527674   -60.0000000 CY
 0.0001288         1263.      9807589.     5.7938297     0.0007460    -0.0023440
 2.0831920   -60.0000000 CY
 0.0001313         1286.      9799728.     5.7992301     0.0007611    -0.0023889
 2.1131834   -60.0000000 CY
 0.0001338         1310.      9791818.     5.8046675     0.0007764    -0.0024336
 2.1427384   -60.0000000 CY
 0.0001363         1333.      9783768.     5.8101243     0.0007916    -0.0024784
 2.1718502   -60.0000000 CY
 0.0001388         1355.      9768172.     5.8141451     0.0008067    -0.0025233
 2.2001328   -60.0000000 CY
 0.0001413         1375.      9732640.     5.8142062     0.0008213    -0.0025687
 2.2269194   -60.0000000 CY
 0.0001438         1392.      9681621.     5.8111043     0.0008353    -0.0026147
 2.2524166   -60.0000000 CY
 0.0001463         1408.      9627431.     5.8073106     0.0008493    -0.0026607
 2.2772760   -60.0000000 CY
 0.0001488         1424.      9574853.     5.8038150     0.0008633    -0.0027067
 2.3017600   -60.0000000 CY
 0.0001588         1489.      9379095.     5.7925622     0.0009196    -0.0028904
 2.3959035   -60.0000000 CY
 0.0001688         1547.      9165100.     5.7756148     0.0009746    -0.0030754
 2.4814229   -60.0000000 CY
 0.0001788         1571.      8788196.     5.7155983     0.0010217    -0.0032683
```

2.5490452	-60.0000000 CY				
0.0001888	1592.	8432991.	5.6588356	0.0010681	-0.0034619
2.6111706	-60.0000000 CY				
0.0001988	1612.	8111886.	5.6070818	0.0011144	-0.0036556
2.6685232	-60.0000000 CY				
0.0002088	1632.	7820223.	5.5604596	0.0011607	-0.0038493
2.7213425	-60.0000000 CY				
0.0002188	1652.	7554228.	5.5193196	0.0012074	-0.0040426
2.7698520	-60.0000000 CY				
0.0002288	1672.	7310508.	5.4829757	0.0012542	-0.0042358
2.8139771	-60.0000000 CY				
0.0002388	1692.	7086241.	5.4508589	0.0013014	-0.0044286
2.8536397	-60.0000000 CY				
0.0002488	1711.	6879053.	5.4224931	0.0013488	-0.0046212
2.8887582	-60.0000000 CY				
0.0002588	1730.	6686909.	5.3972895	0.0013965	-0.0048135
2.9192179	-60.0000000 CY				
0.0002688	1749.	6507918.	5.3736146	0.0014442	-0.0050058
2.9447687	-60.0000000 CY				
0.0002788	1768.	6340881.	5.3528276	0.0014921	-0.0051979
2.9656070	-60.0000000 CY				
0.0002888	1786.	6184527.	5.3346701	0.0015404	-0.0053896
2.9816318	-60.0000000 CY				
0.0002988	1803.	6035054.	5.3173140	0.0015885	-0.0055815
2.9926493	-60.0000000 CY				
0.0003088	1816.	5882653.	5.2949636	0.0016348	-0.0057752
2.9985601	-60.0000000 CY				
0.0003188	1824.	5721787.	5.2639041	0.0016779	-0.0059721
2.9987411	-60.0000000 CY				
0.0003288	1828.	5559329.	5.2283955	0.0017188	-0.0061712
2.9987703	-60.0000000 CY				
0.0003388	1830.	5403563.	5.1939292	0.0017594	-0.0063706
2.9991826	-60.0000000 CY				
0.0003488	1833.	5256344.	5.1622074	0.0018003	-0.0065697
2.9979705	-60.0000000 CY				
0.0003588	1836.	5116522.	5.1300869	0.0018404	-0.0067696
2.9999209	-60.0000000 CY				
0.0003688	1838.	4983928.	5.1002161	0.0018807	-0.0069693
2.9955939	-60.0000000 CY				
0.0003788	1840.	4858111.	5.0724865	0.0019212	-0.0071688
2.9989539	-60.0000000 CY				
0.0003888	1842.	4738566.	5.0467076	0.0019619	-0.0073681
2.9996263	-60.0000000 CY				
0.0003988	1844.	4624734.	5.0228958	0.0020029	-0.0075671
2.9957716	-60.0000000 CY				
0.0004088	1846.	4516315.	5.0006889	0.0020440	-0.0077660
2.9989212	-60.0000000 CY				
0.0004188	1848.	4412919.	4.9799818	0.0020854	-0.0079646

2.9999998	-60.0000000 CY				
0.0004288	1850.	4314098.	4.9608617	0.0021270	-0.0081630
2.9940845	60.0000000 CY				
0.0004388	1851.	4219657.	4.9429871	0.0021687	-0.0083613
2.9978262	60.0000000 CY				
0.0004488	1853.	4129303.	4.9262800	0.0022107	-0.0085593
2.9997389	60.0000000 CY				
0.0004588	1855.	4042599.	4.9096388	0.0022523	-0.0087577
2.9972606	60.0000000 CY				
0.0004688	1856.	3959375.	4.8934248	0.0022938	-0.0089562
2.9943303	60.0000000 CY				
0.0004788	1857.	3879545.	4.8781977	0.0023354	-0.0091546
2.9977264	60.0000000 CY				
0.0004888	1859.	3802899.	4.8639042	0.0023772	-0.0093528
2.9996037	60.0000000 CY				
0.0004988	1860.	3729219.	4.8505593	0.0024192	-0.0095508
2.9984197	60.0000000 CY				
0.0005088	1861.	3658310.	4.8381679	0.0024614	-0.0097486
2.9928942	60.0000000 CY				
0.0005188	1862.	3590074.	4.8265073	0.0025038	-0.0099462
2.9954586	60.0000000 CY				
0.0005288	1864.	3524355.	4.8155418	0.0025462	-0.0101438
2.9982821	60.0000000 CY				
0.0005388	1865.	3461014.	4.8052383	0.0025888	-0.0103412
2.9997641	60.0000000 CY				
0.0005488	1866.	3399892.	4.7956526	0.0026316	-0.0105384
2.9978593	60.0000000 CY				
0.0006088	1871.	3074145.	4.7496918	0.0028914	-0.0117186
2.9966836	60.0000000 CY				
0.0006688	1876.	2805319.	4.7189430	0.0031558	-0.0128942
2.9999929	60.0000000 CYT				
0.0007288	1880.	2579566.	4.6992047	0.0034245	-0.0140655
2.9976764	60.0000000 CYT				
0.0007888	1883.	2387300.	4.6872697	0.0036971	-0.0152329
2.9855368	60.0000000 CYT				
0.0008488	1883.	2218537.	4.7030926	0.0039917	-0.0163783
2.9967511	60.0000000 CYT				

Summary of Results for Nominal (Unfactored) Moment Capacity for Section 1

Moment values interpolated at maximum compressive strain = 0.003
or maximum developed moment if pile fails at smaller strains.

Load No.	Axial Thrust kips	Nominal Mom. Cap. in-kip	Max. Comp. Strain

1	0.000	1873.305	0.00300000

Note that the values of moment capacity in the table above are not factored by a strength reduction factor (phi-factor).

In ACI 318, the value of the strength reduction factor depends on whether the transverse reinforcing steel bars are tied hoops (0.65) or spirals (0.70).

The above values should be multiplied by the appropriate strength reduction factor to compute ultimate moment capacity according to ACI 318, Section 9.3.2.2 or the value required by the design standard being followed.

The following table presents factored moment capacities and corresponding bending stiffnesses computed for common resistance factor values used for reinforced concrete sections.

Axial Load No.	Resist. Factor for Moment	Nominal Moment Cap in-kips	Ult. (Fac) Ax. Thrust kips	Ult. (Fac) Moment Cap in-kips	Bend. Stiff. at Ult Mom kip-in^2
1	0.65	1873.	0.0000	1218.	9822512.
1	0.70	1873.	0.0000	1311.	9791247.
1	0.75	1873.	0.0000	1405.	9637529.

Layering Correction Equivalent Depths of Soil & Rock Layers

Layer No.	Top of Layer Below Pile Head ft	Equivalent Top Depth Below Grnd Surf ft	Same Layer Type As Layer Above	Layer is Rock or is Below Rock Layer	F0 Integral for Layer lbs	F1 Integral for Layer lbs
1	0.00	0.00	N.A.	No	0.00	15632.
2	6.0000	3.9392	No	No	15632.	N.A.

Notes: The F0 integral of Layer n+1 equals the sum of the F0 and F1 integrals for Layer n. Layering correction equivalent depths are computed only for soil types with both shallow-depth and deep-depth expressions for peak lateral load transfer. These soil types are soft and stiff clays, non-liquefied sands, and cemented c-phi soil.

Computed Values of Pile Loading and Deflection
for Lateral Loading for Load Case Number 1

Pile-head conditions are Shear and Moment (Loading Type 1)

Shear force at pile head = 8028.0 lbs
Applied moment at pile head = 344400.0 in-lbs
Axial thrust load on pile head = 0.0 lbs

Depth X	Deflect. y	Bending Moment	Shear Force	Slope S	Total Stress	Bending Stiffness	Soil Res. Es*h	Soil Spr. Lat. Load	Distrib. p
feet	inches	in-lbs	lbs	radians	psi*	in-lb^2	lb/inch	lb/inch	lb/inch
0.00	0.5021	344400.	8028.	-0.00687	0.00	6.23E+10	0.00	0.00	0.00
0.1200	0.4922	355960.	8024.	-0.00686	0.00	6.23E+10	-5.2342	15.3133	0.00
0.2400	0.4823	367510.	8013.	-0.00686	0.00	6.23E+10	-10.2583	30.6267	0.00
0.3600	0.4725	379038.	7995.	-0.00685	0.00	6.22E+10	-15.0727	45.9400	0.00
0.4800	0.4626	390535.	7970.	-0.00684	0.00	6.22E+10	-19.6778	61.2533	0.00
0.6000	0.4528	401991.	7938.	-0.00683	0.00	6.22E+10	-24.0739	76.5666	0.00
0.7200	0.4429	413397.	7901.	-0.00682	0.00	6.22E+10	-28.2616	91.8800	0.00
0.8400	0.4331	424745.	7857.	-0.00681	0.00	6.21E+10	-32.2413	107.1933	0.00
0.9600	0.4233	436026.	7808.	-0.00680	0.00	6.21E+10	-36.0135	122.5066	0.00
1.0800	0.4135	447232.	7754.	-0.00679	0.00	6.21E+10	-39.5786	137.8200	0.00
1.2000	0.4038	458356.	7694.	-0.00678	0.00	6.20E+10	-42.9372	153.1333	0.00
1.3200	0.3940	469391.	7630.	-0.00677	0.00	6.20E+10	-46.0897	168.4466	0.00
1.4400	0.3843	480330.	7562.	-0.00676	0.00	6.20E+10	-49.0368	183.7599	0.00

1.5600	0.3745	491168.	7489.	-0.00675	0.00	6.20E+10
-51.7790	199.0733	0.00				
1.6800	0.3648	501898.	7413.	-0.00674	0.00	6.19E+10
-54.3168	214.3866	0.00				
1.8000	0.3551	512516.	7333.	-0.00672	0.00	6.19E+10
-56.6508	229.6999	0.00				
1.9200	0.3455	523016.	7250.	-0.00671	0.00	6.19E+10
-58.7816	245.0132	0.00				
2.0400	0.3358	533395.	7163.	-0.00670	0.00	6.19E+10
-60.7099	260.3266	0.00				
2.1600	0.3262	543647.	7075.	-0.00668	0.00	4.20E+10
-62.4362	275.6399	0.00				
2.2800	0.3166	553770.	6984.	-0.00663	0.00	1.00E+10
-63.9630	290.9532	0.00				
2.4000	0.3071	563760.	6891.	-0.00655	0.00	1.00E+10
-65.3097	306.2666	0.00				
2.5200	0.2977	573615.	6796.	-0.00647	0.00	1.00E+10
-66.4804	321.5799	0.00				
2.6400	0.2884	583332.	6699.	-0.00639	0.00	1.00E+10
-67.4795	336.8932	0.00				
2.7600	0.2793	592910.	6602.	-0.00630	0.00	1.00E+10
-68.3111	352.2065	0.00				
2.8800	0.2703	602345.	6503.	-0.00622	0.00	1.00E+10
-68.9797	367.5199	0.00				
3.0000	0.2614	611638.	6403.	-0.00613	0.00	1.00E+10
-69.4897	382.8332	0.00				
3.1200	0.2526	620786.	6303.	-0.00604	0.00	1.00E+10
-69.8456	398.1465	0.00				
3.2400	0.2440	629789.	6202.	-0.00595	0.00	1.00E+10
-70.0520	413.4599	0.00				
3.3600	0.2355	638648.	6101.	-0.00586	0.00	1.00E+10
-70.1135	428.7732	0.00				
3.4800	0.2271	647361.	6000.	-0.00577	0.00	9.99E+09
-70.0351	444.0865	0.00				
3.6000	0.2189	655928.	5900.	-0.00567	0.00	9.99E+09
-69.8213	459.3998	0.00				
3.7200	0.2108	664351.	5799.	-0.00558	0.00	9.99E+09
-69.4772	474.7132	0.00				
3.8400	0.2028	672630.	5700.	-0.00548	0.00	9.99E+09
-69.0076	490.0265	0.00				
3.9600	0.1950	680766.	5601.	-0.00539	0.00	9.99E+09
-68.4177	505.3398	0.00				
4.0800	0.1873	688760.	5503.	-0.00529	0.00	9.98E+09
-67.7124	520.6532	0.00				
4.2000	0.1797	696613.	5406.	-0.00519	0.00	9.98E+09
-66.8969	535.9665	0.00				
4.3200	0.1723	704328.	5310.	-0.00509	0.00	9.98E+09
-65.9764	551.2798	0.00				

4.4400	0.1651	711906.	5216.	-0.00498	0.00	9.98E+09
-64.9562	566.5931	0.00				
4.5600	0.1580	719349.	5123.	-0.00488	0.00	9.97E+09
-63.8415	581.9065	0.00				
4.6800	0.1510	726660.	5032.	-0.00478	0.00	9.97E+09
-62.6378	597.2198	0.00				
4.8000	0.1442	733841.	4943.	-0.00467	0.00	9.97E+09
-61.3505	612.5331	0.00				
4.9200	0.1376	740895.	4855.	-0.00456	0.00	9.97E+09
-59.9851	627.8465	0.00				
5.0400	0.1311	747824.	4770.	-0.00446	0.00	9.97E+09
-58.5471	643.1598	0.00				
5.1600	0.1247	754632.	4687.	-0.00435	0.00	9.96E+09
-57.0420	658.4731	0.00				
5.2800	0.1186	761322.	4606.	-0.00424	0.00	9.96E+09
-55.4757	673.7864	0.00				
5.4000	0.1125	767896.	4527.	-0.00413	0.00	9.96E+09
-53.8536	689.0998	0.00				
5.5200	0.1067	774359.	4451.	-0.00402	0.00	9.96E+09
-52.1817	704.4131	0.00				
5.6400	0.1010	780714.	4377.	-0.00390	0.00	9.96E+09
-50.4656	719.7264	0.00				
5.7600	0.09543	786964.	4305.	-0.00379	0.00	9.96E+09
-48.7112	735.0397	0.00				
5.8800	0.09005	793113.	4236.	-0.00368	0.00	9.95E+09
-46.9243	750.3531	0.00				
6.0000	0.08484	799165.	3848.	-0.00356	0.00	9.95E+09
-492.2898	8356.	0.00				
6.1200	0.07980	804196.	2964.	-0.00345	0.00	9.95E+09
-736.1928	13285.	0.00				
6.2400	0.07492	807701.	1896.	-0.00333	0.00	9.95E+09
-746.7637	14353.	0.00				
6.3600	0.07021	809657.	813.8551	-0.00321	0.00	9.95E+09
-756.1716	15509.	0.00				
6.4800	0.06567	810045.	-280.9144	-0.00309	0.00	9.95E+09
-764.3416	16760.	0.00				
6.6000	0.06130	808848.	-1387.	-0.00298	0.00	9.95E+09
-771.2002	18117.	0.00				
6.7200	0.05710	806051.	-2501.	-0.00286	0.00	9.95E+09
-776.6750	19588.	0.00				
6.8400	0.05306	801645.	-3622.	-0.00274	0.00	9.95E+09
-780.6952	21187.	0.00				
6.9600	0.04919	795619.	-4748.	-0.00263	0.00	9.95E+09
-783.1917	22926.	0.00				
7.0800	0.04549	787970.	-5877.	-0.00251	0.00	9.95E+09
-784.0966	24820.	0.00				
7.2000	0.04195	778694.	-7005.	-0.00240	0.00	9.96E+09
-783.3437	26887.	0.00				

7.3200	0.03858	767794.	-8132.	-0.00229	0.00	9.96E+09
-780.8678	29148.	0.00				
7.4400	0.03536	755275.	-9253.	-0.00218	0.00	9.96E+09
-776.0876	31604.	0.00				
7.5600	0.03230	741147.	-10333.	-0.00207	0.00	9.97E+09
-724.7747	32309.	0.00				
7.6800	0.02940	725516.	-11340.	-0.00196	0.00	9.97E+09
-674.0014	33014.	0.00				
7.8000	0.02664	708487.	-12275.	-0.00186	0.00	9.98E+09
-623.9164	33719.	0.00				
7.9200	0.02404	690165.	-13138.	-0.00176	0.00	9.98E+09
-574.6550	34424.	0.00				
8.0400	0.02158	670651.	-13930.	-0.00166	0.00	9.99E+09
-526.3386	35129.	0.00				
8.1600	0.01925	650045.	-14654.	-0.00157	0.00	9.99E+09
-479.0752	35834.	0.00				
8.2800	0.01706	628446.	-15311.	-0.00147	0.00	1.00E+10
-432.9588	36539.	0.00				
8.4000	0.01500	605949.	-15902.	-0.00139	0.00	1.00E+10
-388.0693	37244.	0.00				
8.5200	0.01307	582648.	-16430.	-0.00130	0.00	1.00E+10
-344.4734	37949.	0.00				
8.6400	0.01126	558632.	-16895.	-0.00122	0.00	1.00E+10
-302.2237	38654.	0.00				
8.7600	0.00956	533990.	-17301.	-0.00117	0.00	6.19E+10
-261.3564	39359.	0.00				
8.8800	0.00788	508805.	-17647.	-0.00116	0.00	6.19E+10
-219.3256	40064.	0.00				
9.0000	0.00622	483166.	-17932.	-0.00115	0.00	6.20E+10
-176.1332	40769.	0.00				
9.1200	0.00458	457162.	-18154.	-0.00114	0.00	6.21E+10
-131.7790	41474.	0.00				
9.2400	0.00294	430884.	-18310.	-0.00113	0.00	6.21E+10
-86.2607	42179.	0.00				
9.3600	0.00133	404427.	-18401.	-0.00112	0.00	6.22E+10
-39.5743	42884.	0.00				
9.4800	-2.74E-04	377889.	-18424.	-0.00111	0.00	6.22E+10
8.2863	43589.	0.00				
9.6000	-0.00186	351367.	-18376.	-0.00110	0.00	6.23E+10
57.3289	44294.	0.00				
9.7200	-0.00344	324965.	-18258.	-0.00109	0.00	6.24E+10
107.5630	44999.	0.00				
9.8400	-0.00501	298785.	-18066.	-0.00109	0.00	6.24E+10
158.9996	45704.	0.00				
9.9600	-0.00657	272936.	-17799.	-0.00108	0.00	6.25E+10
211.6513	46409.	0.00				
10.0800	-0.00812	247525.	-17455.	-0.00107	0.00	6.26E+10
265.5318	47114.	0.00				

10.2000	-0.00966	222664.	-17033.	-0.00107	0.00	6.26E+10
320.6562	47819.	0.00				
10.3200	-0.01119	198469.	-16531.	-0.00106	0.00	6.27E+10
377.0403	48524.	0.00				
10.4400	-0.01272	175055.	-15946.	-0.00106	0.00	6.27E+10
434.7010	49229.	0.00				
10.5600	-0.01424	152543.	-15278.	-0.00105	0.00	6.28E+10
493.6556	49934.	0.00				
10.6800	-0.01575	131055.	-14524.	-0.00105	0.00	6.28E+10
553.9220	50639.	0.00				
10.8000	-0.01726	110715.	-13682.	-0.00105	0.00	6.29E+10
615.5181	51345.	0.00				
10.9200	-0.01877	91651.	-12750.	-0.00105	0.00	6.29E+10
678.4620	52050.	0.00				
11.0400	-0.02027	73994.	-11727.	-0.00104	0.00	6.30E+10
742.7714	52755.	0.00				
11.1600	-0.02178	57878.	-10610.	-0.00104	0.00	6.30E+10
808.4636	53460.	0.00				
11.2800	-0.02328	43438.	-9397.	-0.00104	0.00	6.30E+10
875.5550	54165.	0.00				
11.4000	-0.02478	30813.	-8087.	-0.00104	0.00	6.30E+10
944.0609	54870.	0.00				
11.5200	-0.02627	20146.	-6678.	-0.00104	0.00	6.30E+10
1014.	55575.	0.00				
11.6400	-0.02777	11582.	-5166.	-0.00104	0.00	6.30E+10
1085.	56280.	0.00				
11.7600	-0.02927	5268.	-3551.	-0.00104	0.00	6.30E+10
1158.	56985.	0.00				
11.8800	-0.03076	1356.	-1829.	-0.00104	0.00	6.30E+10
1232.	57690.	0.00				
12.0000	-0.03226	0.00	0.00	-0.00104	0.00	6.30E+10
1308.	29197.	0.00				

* This analysis computed pile response using nonlinear moment-curvature relationships. Values of total stress due to combined axial and bending stresses are computed only for elastic sections only and do not equal the actual stresses in concrete and steel. Stresses in concrete and steel may be interpolated from the output for nonlinear bending properties relative to the magnitude of bending moment developed in the pile.

Output Summary for Load Case No. 1:

Pile-head deflection	=	0.50209607 inches
Computed slope at pile head	=	-0.00687294 radians
Maximum bending moment	=	810045. inch-lbs
Maximum shear force	=	-18424. lbs
Depth of maximum bending moment	=	6.48000000 feet below pile head

Depth of maximum shear force = 9.48000000 feet below pile head
Number of iterations = 80
Number of zero deflection points = 1

Summary of Pile-head Responses for Conventional Analyses

Definitions of Pile-head Loading Conditions:

Load Type 1: Load 1 = Shear, V, lbs, and Load 2 = Moment, M, in-lbs
Load Type 2: Load 1 = Shear, V, lbs, and Load 2 = Slope, S, radians
Load Type 3: Load 1 = Shear, V, lbs, and Load 2 = Rot. Stiffness, R, in-lbs/rad.
Load Type 4: Load 1 = Top Deflection, y, inches, and Load 2 = Moment, M, in-lbs
Load Type 5: Load 1 = Top Deflection, y, inches, and Load 2 = Slope, S, radians

Load Case	Load Type	Load Pile-head	Load Type	Load Pile-head	Axial Loading	Pile-head Deflection	Pile-head Rotation	Max Shear in Pile	Max Moment in Pile
No.	1	Load 1	2	Load 2	lbs	inches	radians	lbs	in-lbs
1	V, lb	8028.	M, in-lb	344400.	0.00	0.5021	-0.00687	-18424.	810045.

Maximum pile-head deflection = 0.5020960677 inches
Maximum pile-head rotation = -0.0068729448 radians = -0.393791 deg.

The analysis ended normally.

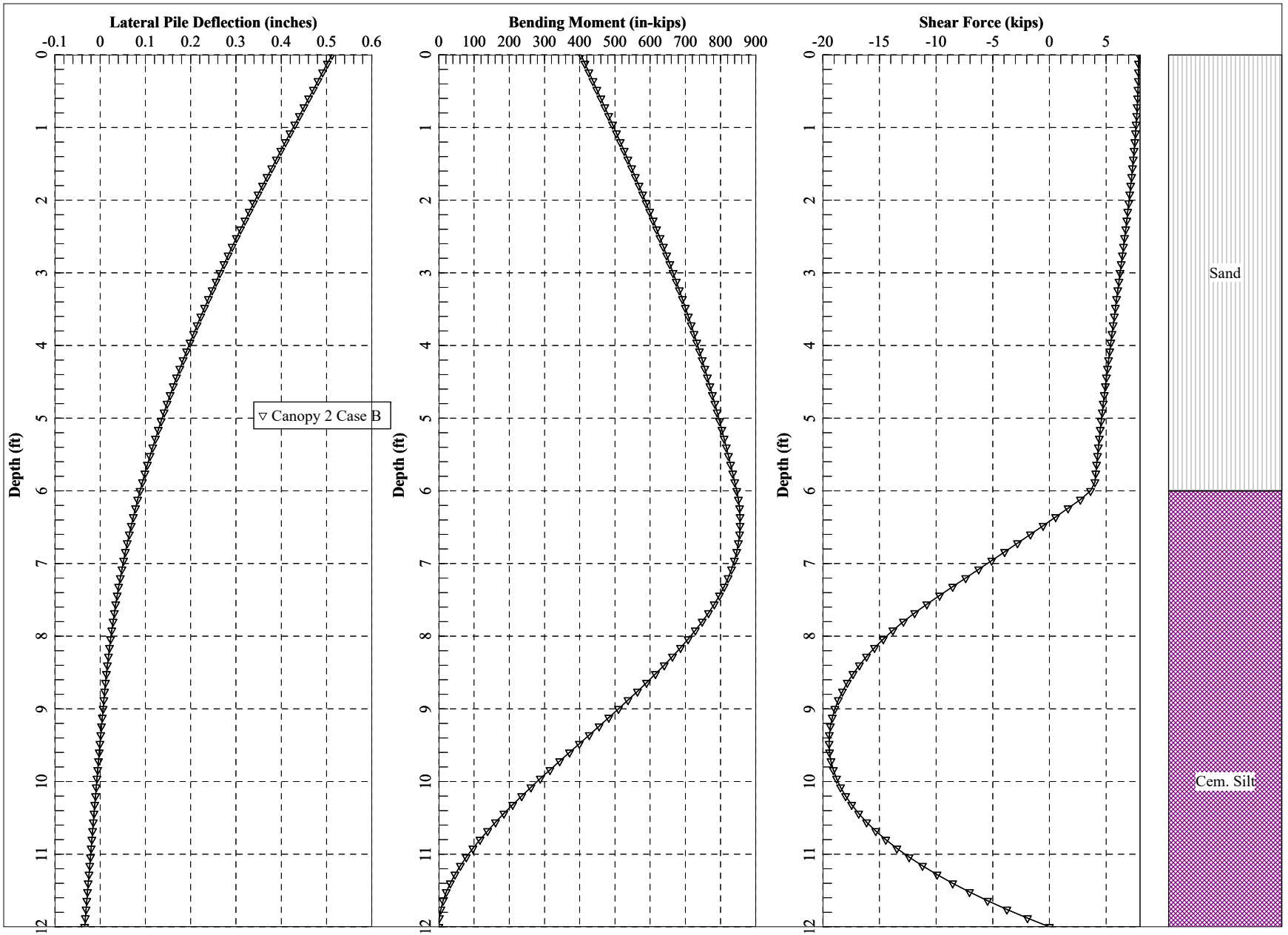
Lateral Pile Deflection (inches)
-0.1 0 0.1 0.2 0.3 0.4 0.5 0.6
Depth (ft)
0 1 2 3 4 5 6 7 8 9 10 11 12
Canopy 2 Case B
Bending Moment (in-kips)
0 100 200 300 400 500 600 700 800 900
Depth (ft)
0 1 2 3 4 5 6 7 8 9 10 11 12
Shear Force (kips)
-20 -15 -10 -5 0 5
Depth (ft)
0 1 2 3 4 5 6 7 8 9 10 11 12
Sand
Cem. Silt

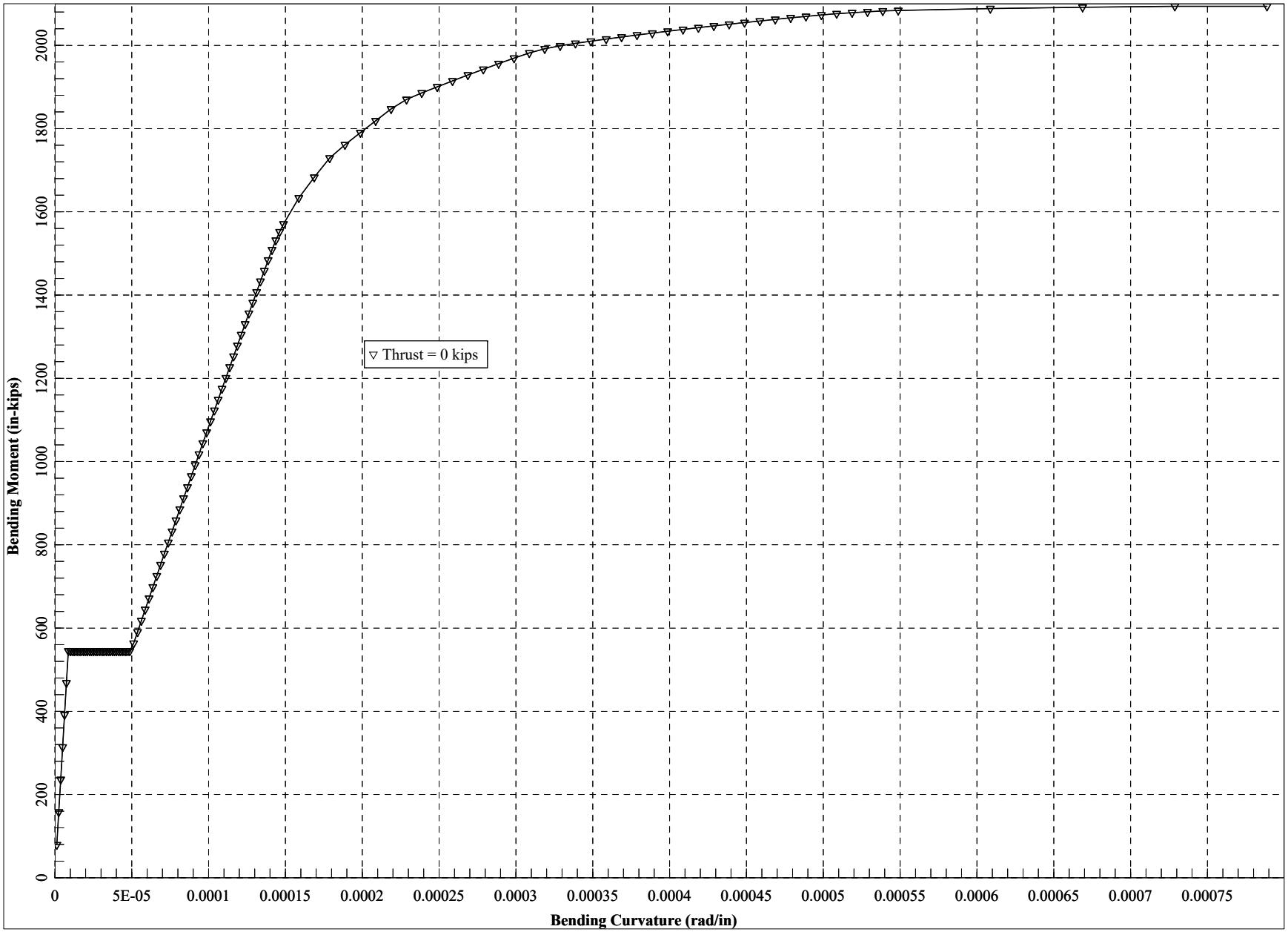
Bending Moment (in-kips)
0
200
400
600
800
1000
1200
1400
1600
1800
2000
Thrust = 0 kips
0
5E-05
0.0001
0.00015
0.0002
0.00025
0.0003
0.00035
0.0004
0.00045
0.0005
0.00055
0.0006
0.00065
0.0007
0.00075
Bending Curvature (rad/in)

Pv Panel Canopy 2 Case B.lp9o

==========

LPile for Windows, Version 2016-09.010

Analysis of Individual Piles and Drilled Shafts
Subjected to Lateral Loading Using the p-y Method
© 1985-2016 by Ensoft, Inc.
All Rights Reserved

==========

This copy of LPile is being used by:

LA City BOE
LA City BOE

Serial Number of Security Device: 225227467

This copy of LPile is licensed for exclusive use by:

L.A. Bureau of Engineering, Los

Use of this program by any entity other than L.A. Bureau of Engineering, Los
is a violation of the software license agreement.

Files Used for Analysis

Path to file locations:
\PROJECTS\2017\17-074 Granada Hills Pool Replacement\Analysis\LPILE 2018\

Name of input data file:
Pv Panel Canopy 2 Case B.lp9d

Name of output report file:
Pv Panel Canopy 2 Case B.lp9o

Name of plot output file:
Pv Panel Canopy 2 Case B.lp9p

Name of runtime message file:
Pv Panel Canopy 2 Case B.lp9r

Date and Time of Analysis

Date: October 11, 2018 Time: 10:38:58

Problem Title

Project Name: Strathern Park North Baseball Fields

Job Number: 14-090

Client:

Engineer: Easton

Description: Baseball Field Light Pole Foundations

Program Options and Settings

Computational Options:
- Use unfactored loads in computations (conventional analysis)

Engineering Units Used for Data Input and Computations:
- US Customary System Units (pounds, feet, inches)

Analysis Control Options:

- Maximum number of iterations allowed	=	500
- Deflection tolerance for convergence	=	1.0000E-05 in
- Maximum allowable deflection	=	100.0000 in
- Number of pile increments	=	100

Loading Type and Number of Cycles of Loading:
 - Static loading specified

 - Use of p-y modification factors for p-y curves not selected
 - No distributed lateral loads are entered
 - Loading by lateral soil movements acting on pile not selected
 - Input of shear resistance at the pile tip not selected
 - Computation of pile-head foundation stiffness matrix not selected
 - Push-over analysis of pile not selected
 - Buckling analysis of pile not selected

Output Options:
 - Output files use decimal points to denote decimal symbols.
 - Values of pile-head deflection, bending moment, shear force, and
   soil reaction are printed for full length of pile.
 - Printing Increment (nodal spacing of output points) = 1
 - No p-y curves to be computed and reported for user-specified depths
 - Print using wide report formats

Pile Structural Properties and Geometry

Number of pile sections defined = 1
Total length of pile = 12.000 ft
Depth of ground surface below top of pile = 0.0000 ft

Pile diameters used for p-y curve computations are defined using 2 points.

p-y curves are computed using pile diameter values interpolated with depth over the length of the pile. A summary of values of pile diameter vs. depth follows.

Point No.	Depth Below Pile Head feet	Pile Diameter inches
1	0.000	24.0000
2	12.000	24.0000

Input Structural Properties for Pile Sections:

Pile Section No. 1:

Section 1 is a round drilled shaft, bored pile, or CIDH pile

Length of section	=	12.000000 ft
Shaft Diameter	=	24.000000 in
Shear capacity of section	=	0.0000 lbs

Ground Slope and Pile Batter Angles

Ground Slope Angle	=	0.000 degrees
	=	0.000 radians
Pile Batter Angle	=	0.000 degrees
	=	0.000 radians

Soil and Rock Layering Information

The soil profile is modelled using 2 layers

Layer 1 is sand, p-y criteria by Reese et al., 1974

Distance from top of pile to top of layer	=	0.0000 ft
Distance from top of pile to bottom of layer	=	6.000000 ft
Effective unit weight at top of layer	=	98.000000 pcf
Effective unit weight at bottom of layer	=	98.000000 pcf
Friction angle at top of layer	=	20.000000 deg.
Friction angle at bottom of layer	=	20.000000 deg.
Subgrade k at top of layer	=	0.0000 pci
Subgrade k at bottom of layer	=	0.0000 pci

NOTE: Default values for subgrade k will be computed for this layer.

Layer 2 is cemented silt with cohesion and friction

Distance from top of pile to top of layer	=	6.000000 ft
Distance from top of pile to bottom of layer	=	14.000000 ft
Effective unit weight at top of layer	=	125.000000 pcf
Effective unit weight at bottom of layer	=	125.000000 pcf
Undrained cohesion at top of layer	=	100.000000 psf
Undrained cohesion at bottom of layer	=	100.000000 psf
Friction angle at top of layer	=	31.000000 deg.
Friction angle at bottom of layer	=	31.000000 deg.

Epsilon-50 at top of layer = 0.0000
Epsilon-50 at bottom of layer = 0.0000
Subgrade k at top of layer = 0.0000 pci
Subgrade k at bottom of layer = 0.0000 pci

NOTE: Default values for Epsilon-50 will be computed for this layer.
NOTE: Default values for subgrade k will be computed for this layer.

(Depth of the lowest soil layer extends 2.000 ft below the pile tip)

Summary of Input Soil Properties

Layer Num.	Soil Type Name (p-y Curve Type)	Layer Depth ft	Effective Unit Wt. pcf	Undrained Cohesion psf	Angle of Friction deg.	E50 or kpy krm pci
1	Sand (Reese, et al.)	0.00	98.0000	--	20.0000	-- default
		6.0000	98.0000	--	20.0000	-- default
2	Cemented	6.0000	125.0000	100.0000	31.0000	default default
	Silt	14.0000	125.0000	100.0000	31.0000	default default

Static Loading Type

Static loading criteria were used when computing p-y curves for all analyses.

Pile-head Loading and Pile-head Fixity Conditions

Number of loads specified = 1

Load No.	Load Type	Condition 1	Condition 2	Axial Thrust Force, lbs	Compute Top y vs. Pile Length
1	1	V = 7883. lbs	M = 403464. in-lbs	0.0000000	No

V = shear force applied normal to pile axis
M = bending moment applied to pile head
y = lateral deflection normal to pile axis
S = pile slope relative to original pile batter angle
R = rotational stiffness applied to pile head
Values of top y vs. pile lengths can be computed only for load types with specified shear loading (Load Types 1, 2, and 3).
Thrust force is assumed to be acting axially for all pile batter angles.

Computations of Nominal Moment Capacity and Nonlinear Bending Stiffness

---

Axial thrust force values were determined from pile-head loading conditions

Number of Pile Sections Analyzed = 1

Pile Section No. 1:

Dimensions and Properties of Drilled Shaft (Bored Pile):

Length of Section	= 12.000000	ft
Shaft Diameter	= 24.000000	in
Concrete Cover Thickness	= 3.000000	in
Number of Reinforcing Bars	= 9	bars
Yield Stress of Reinforcing Bars	= 60000.	psi
Modulus of Elasticity of Reinforcing Bars	= 29000000.	psi
Gross Area of Shaft	= 452.389342	sq. in.
Total Area of Reinforcing Steel	= 3.960000	sq. in.
Area Ratio of Steel Reinforcement	= 0.88	percent
Edge-to-Edge Bar Spacing	= 5.149847	in
Maximum Concrete Aggregate Size	= 0.750000	in
Ratio of Bar Spacing to Aggregate Size	= 6.87	
Offset of Center of Rebar Cage from Center of Pile	= 0.0000	in

Axial Structural Capacities:

Nom. Axial Structural Capacity = 0.85 Fc Ac + Fy As = 1381.095 kips
Tensile Load for Cracking of Concrete = -175.658 kips
Nominal Axial Tensile Capacity = -237.600 kips

Reinforcing Bar Dimensions and Positions Used in Computations:

Bar Number	Bar Diam. inches	Bar Area sq. in.	X inches	Y inches
1	0.750000	0.440000	8.625000	0.00000
2	0.750000	0.440000	6.607133	5.544043
3	0.750000	0.440000	1.497716	8.493967
4	0.750000	0.440000	-4.312500	7.469469
5	0.750000	0.440000	-8.104849	2.949924
6	0.750000	0.440000	-8.104849	-2.949924
7	0.750000	0.440000	-4.312500	-7.469469
8	0.750000	0.440000	1.497716	-8.493967
9	0.750000	0.440000	6.607133	-5.544043

NOTE: The positions of the above rebars were computed by LPile

Minimum spacing between any two bars not equal to zero = 5.150 inches
between bars 3 and 4.

Ratio of bar spacing to maximum aggregate size = 6.87

Concrete Properties:

Compressive Strength of Concrete = 3000. psi
Modulus of Elasticity of Concrete = 3122019. psi
Modulus of Rupture of Concrete = -410.791918 psi
Compression Strain at Peak Stress = 0.001634
Tensile Strain at Fracture of Concrete = -0.0001160
Maximum Coarse Aggregate Size = 0.750000 in

Number of Axial Thrust Force Values Determined from Pile-head Loadings = 1

Number	Axial Thrust Force kips

1 0.000

Definitions of Run Messages and Notes:

C = concrete in section has cracked in tension.
Y = stress in reinforcing steel has reached yield stress.
T = ACI 318 criteria for tension-controlled section met, tensile strain in reinforcement exceeds 0.005 while simultaneously compressive strain in concrete more than 0.003. See ACI 318, Section 10.3.4.
Z = depth of tensile zone in concrete section is less than 10 percent of section depth.

Bending Stiffness (EI) = Computed Bending Moment / Curvature.
Position of neutral axis is measured from edge of compression side of pile.
Compressive stresses and strains are positive in sign.
Tensile stresses and strains are negative in sign.

Axial Thrust Force = 0.000 kips

Bending Max Conc Curvature Stress rad/in.	Bending Max Steel Stress ksi	Bending Moment in-kip	Stiffness kip-in2	Depth to N Axis in	Max Comp Strain in/in	Max Tens Strain in/in	Run Msg
0.00000125	79.2196133	63375691.	11.9999564	0.00001500	-0.00001500	0.0542954	-0.4306516
0.00000250	157.9766872	63190675.	11.9999562	0.00003000	-0.00003000	0.1080949	-0.8613032
0.00000375	236.2712216	63005659.	11.9999560	0.00004500	-0.00004500	0.1613987	-1.2919548
0.00000500	314.1032165	62820643.	11.9999558	0.00006000	-0.00006000	0.2142066	-1.7226064
0.00000625	391.4726720	62635628.	11.9999556	0.00007500	-0.00007500	0.2665186	-2.1532580
0.00000750	468.3795881	62450612.	11.9999554	0.00009000	-0.00009000	0.3183349	-2.5839096
0.00000875	544.8239647	62265596.	11.9999552	0.0001050	-0.0001050	0.3696553	-3.0145613
0.00001000	544.8239647	54482396.	5.7738472	0.00005774	-0.0001823	0.2040700	-5.2507843 C
0.00001125	544.8239647	48428797.	5.7760894	0.00006498	-0.0002050	0.2291625	-5.9064008 C

0.00001250	544.8239647	43585917.	5.7783377	0.00007223	-0.0002278
0.2541618	-6.5618526 C				
0.00001375	544.8239647	39623561.	5.7805920	0.00007948	-0.0002505
0.2790677	-7.2171389 C				
0.00001500	544.8239647	36321598.	5.7828524	0.00008674	-0.0002733
0.3038801	-7.8722592 C				
0.00001625	544.8239647	33527629.	5.7851190	0.00009401	-0.0002960
0.3285989	-8.5272126 C				
0.00001750	544.8239647	31132798.	5.7873917	0.0001013	-0.0003187
0.3532237	-9.1819987 C				
0.00001875	544.8239647	29057278.	5.7896706	0.0001086	-0.0003414
0.3777543	-9.8366166 C				
0.00002000	544.8239647	27241198.	5.7919558	0.0001158	-0.0003642
0.4021907	-10.4910656 C				
0.00002125	544.8239647	25638775.	5.7942473	0.0001231	-0.0003869
0.4265326	-11.1453451 C				
0.00002250	544.8239647	24214398.	5.7965450	0.0001304	-0.0004096
0.4507798	-11.7994543 C				
0.00002375	544.8239647	22939956.	5.7988491	0.0001377	-0.0004323
0.4749320	-12.4533926 C				
0.00002500	544.8239647	21792959.	5.8011596	0.0001450	-0.0004550
0.4989892	-13.1071592 C				
0.00002625	544.8239647	20755199.	5.8034765	0.0001523	-0.0004777
0.5229510	-13.7607535 C				
0.00002750	544.8239647	19811781.	5.8057999	0.0001597	-0.0005003
0.5468174	-14.4141746 C				
0.00002875	544.8239647	18950399.	5.8081297	0.0001670	-0.0005230
0.5705880	-15.0674218 C				
0.00003000	544.8239647	18160799.	5.8104661	0.0001743	-0.0005457
0.5942627	-15.7204945 C				
0.00003125	544.8239647	17434367.	5.8128090	0.0001817	-0.0005683
0.6178412	-16.3733918 C				
0.00003250	544.8239647	16763814.	5.8151585	0.0001890	-0.0005910
0.6413234	-17.0261130 C				
0.00003375	544.8239647	16142932.	5.8175147	0.0001963	-0.0006137
0.6647091	-17.6786574 C				
0.00003500	544.8239647	15566399.	5.8198775	0.0002037	-0.0006363
0.6879980	-18.3310242 C				
0.00003625	544.8239647	15029627.	5.8222471	0.0002111	-0.0006589
0.7111899	-18.9832127 C				
0.00003750	544.8239647	14528639.	5.8246234	0.0002184	-0.0006816
0.7342847	-19.6352220 C				
0.00003875	544.8239647	14059973.	5.8270065	0.0002258	-0.0007042
0.7572820	-20.2870514 C				
0.00004000	544.8239647	13620599.	5.8293965	0.0002332	-0.0007268
0.7801817	-20.9387000 C				
0.00004125	544.8239647	13207854.	5.8317933	0.0002406	-0.0007494
0.8029836	-21.5901672 C				

```
0.00004250   544.8239647     12819387.     5.8341970     0.0002480    -0.0007720
 0.8256874   -22.2414521 C
0.00004375   544.8239647     12453119.     5.8366077     0.0002554    -0.0007946
 0.8482929   -22.8925539 C
0.00004500   544.8239647     12107199.     5.8390254     0.0002628    -0.0008172
 0.8708000   -23.5434718 C
0.00004625   544.8239647     11779978.     5.8414501     0.0002702    -0.0008398
 0.8932083   -24.1942050 C
0.00004750   544.8239647     11469978.     5.8438819     0.0002776    -0.0008624
 0.9155176   -24.8447527 C
0.00004875   544.8239647     11175876.     5.8463208     0.0002850    -0.0008850
 0.9377278   -25.4951140 C
0.00005125   563.5914616     10996907.     5.8512201     0.0002999    -0.0009301
 0.9818496   -26.7952744 C
0.00005375   590.6610049     10989042.     5.8561484     0.0003148    -0.0009752
 1.0255720   -28.0946789 C
0.00005625   617.6889581     10981137.     5.8611061     0.0003297    -0.0010203
 1.0688931   -29.3933210 C
0.00005875   644.6749922     10973191.     5.8660935     0.0003446    -0.0010654
 1.1118110   -30.6911936 C
0.00006125   671.6187729     10965204.     5.8711109     0.0003596    -0.0011104
 1.1543237   -31.9882897 C
0.00006375   698.5199610     10957176.     5.8761588     0.0003746    -0.0011554
 1.1964293   -33.2846020 C
0.00006625   725.3784697     10949109.     5.8811820     0.0003896    -0.0012004
 1.2381156   -34.5802290 C
0.00006875   752.1942955     10941008.     5.8860619     0.0004047    -0.0012453
 1.2793568   -35.8754148 C
0.00007125   778.9667532     10932867.     5.8909706     0.0004197    -0.0012903
 1.3201824   -37.1698327 C
0.00007375   805.6954394     10924684.     5.8959085     0.0004348    -0.0013352
 1.3605903   -38.4634765 C
0.00007625   832.3800066     10916459.     5.9008759     0.0004499    -0.0013801
 1.4005786   -39.7563390 C
0.00007875   859.0201018     10908192.     5.9058731     0.0004651    -0.0014249
 1.4401450   -41.0484131 C
0.00008125   885.6153665     10899881.     5.9109007     0.0004803    -0.0014697
 1.4792878   -42.3396912 C
0.00008375   912.1654367     10891528.     5.9159589     0.0004955    -0.0015145
 1.5180046   -43.6301659 C
0.00008625   938.6699424     10883130.     5.9210481     0.0005107    -0.0015593
 1.5562935   -44.9198296 C
0.00008875   965.1285079     10874687.     5.9261687     0.0005259    -0.0016041
 1.5941523   -46.2086745 C
0.00009125   991.5407515     10866200.     5.9313212     0.0005412    -0.0016488
 1.6315787   -47.4966927 C
0.00009375        1018.      10857667.     5.9365058     0.0005565    -0.0016935
 1.6685707   -48.7838762 C
```

```
0.00009625         1044.     10849088.     5.9417231     0.0005719    -0.0017381
 1.7051260   -50.0702169 C
0.00009875         1070.     10840462.     5.9469735     0.0005873    -0.0017827
 1.7412422   -51.3557062 C
 0.0001013         1097.     10831789.     5.9522574     0.0006027    -0.0018273
 1.7769171   -52.6403360 C
 0.0001038         1123.     10823068.     5.9575753     0.0006181    -0.0018719
 1.8121485   -53.9240974 C
 0.0001063         1149.     10814299.     5.9629275     0.0006336    -0.0019164
 1.8469338   -55.2069818 C
 0.0001088         1175.     10805481.     5.9683146     0.0006491    -0.0019609
 1.8812707   -56.4889801 C
 0.0001113         1201.     10796613.     5.9737370     0.0006646    -0.0020054
 1.9151568   -57.7700834 C
 0.0001138         1227.     10787695.     5.9791952     0.0006801    -0.0020499
 1.9485895   -59.0502823 C
 0.0001163         1253.     10778726.     5.9846898     0.0006957    -0.0020943
 1.9815665   -60.0000000 CY
 0.0001188         1279.     10769705.     5.9902211     0.0007113    -0.0021387
 2.0140850   -60.0000000 CY
 0.0001213         1305.     10760632.     5.9957897     0.0007270    -0.0021830
 2.0461426   -60.0000000 CY
 0.0001238         1330.     10751509.     6.0013962     0.0007427    -0.0022273
 2.0777369   -60.0000000 CY
 0.0001263         1356.     10742330.     6.0070410     0.0007584    -0.0022716
 2.1088646   -60.0000000 CY
 0.0001288         1382.     10733096.     6.0127247     0.0007741    -0.0023159
 2.1395233   -60.0000000 CY
 0.0001313         1407.     10723808.     6.0184479     0.0007899    -0.0023601
 2.1697103   -60.0000000 CY
 0.0001338         1433.     10714464.     6.0242111     0.0008057    -0.0024043
 2.1994228   -60.0000000 CY
 0.0001363         1459.     10705063.     6.0300149     0.0008216    -0.0024484
 2.2286578   -60.0000000 CY
 0.0001388         1484.     10695606.     6.0358599     0.0008375    -0.0024925
 2.2574126   -60.0000000 CY
 0.0001413         1509.     10682726.     6.0411091     0.0008533    -0.0025367
 2.2855227   -60.0000000 CY
 0.0001438         1532.     10655244.     6.0436054     0.0008688    -0.0025812
 2.3124408   -60.0000000 CY
 0.0001463         1552.     10611089.     6.0428624     0.0008838    -0.0026262
 2.3380466   -60.0000000 CY
 0.0001488         1571.     10558873.     6.0405069     0.0008985    -0.0026715
 2.3627542   -60.0000000 CY
 0.0001588         1633.     10288956.     6.0177510     0.0009553    -0.0028547
 2.4533877   -60.0000000 CY
 0.0001688         1683.      9972913.     5.9838231     0.0010098    -0.0030402
 2.5336894   -60.0000000 CY
```

0.0001788	1729.	9674370.	5.9519399	0.0010639	-0.0032261
2.6071989	-60.0000000 CY				
0.0001888	1761.	9329841.	5.9059557	0.0011147	-0.0034153
2.6704028	-60.0000000 CY				
0.0001988	1790.	9006791.	5.8621164	0.0011651	-0.0036049
2.7275202	-60.0000000 CY				
0.0002088	1819.	8712832.	5.8225447	0.0012155	-0.0037945
2.7792210	-60.0000000 CY				
0.0002188	1847.	8444296.	5.7880969	0.0012661	-0.0039839
2.8257794	-60.0000000 CY				
0.0002288	1870.	8174879.	5.7499605	0.0013153	-0.0041747
2.8656421	-60.0000000 CY				
0.0002388	1886.	7897612.	5.7054820	0.0013622	-0.0043678
2.8988034	-60.0000000 CY				
0.0002488	1900.	7638991.	5.6646679	0.0014091	-0.0045609
2.9272855	-60.0000000 CY				
0.0002588	1915.	7399264.	5.6272303	0.0014560	-0.0047540
2.9510982	-60.0000000 CY				
0.0002688	1929.	7176138.	5.5920138	0.0015029	-0.0049471
2.9701471	-60.0000000 CY				
0.0002788	1942.	6968200.	5.5604265	0.0015500	-0.0051400
2.9846001	-60.0000000 CY				
0.0002888	1956.	6773846.	5.5321260	0.0015974	-0.0053326
2.9943636	-60.0000000 CY				
0.0002988	1969.	6591689.	5.5068181	0.0016452	-0.0055248
2.9993391	-60.0000000 CY				
0.0003088	1982.	6418430.	5.4831096	0.0016929	-0.0057171
2.9969836	-60.0000000 CY				
0.0003188	1992.	6248424.	5.4578414	0.0017397	-0.0059103
2.9999164	-60.0000000 CY				
0.0003288	1999.	6080427.	5.4303845	0.0017852	-0.0061048
2.9976655	-60.0000000 CY				
0.0003388	2005.	5918113.	5.4029524	0.0018303	-0.0062997
2.9999516	-60.0000000 CY				
0.0003488	2010.	5763291.	5.3752914	0.0018746	-0.0064954
2.9969746	-60.0000000 CY				
0.0003588	2015.	5616691.	5.3496361	0.0019192	-0.0066908
2.9997220	-60.0000000 CY				
0.0003688	2020.	5477624.	5.3261760	0.0019640	-0.0068860
2.9956964	-60.0000000 CY				
0.0003788	2025.	5345551.	5.3046629	0.0020091	-0.0070809
2.9987408	-60.0000000 CY				
0.0003888	2029.	5219989.	5.2848679	0.0020545	-0.0072755
2.9997749	-60.0000000 CY				
0.0003988	2034.	5100328.	5.2668574	0.0021002	-0.0074698
2.9959866	-60.0000000 CY				
0.0004088	2038.	4986296.	5.2502525	0.0021460	-0.0076640
2.9991763	60.0000000 CY				

```
   0.0004188         2042.      4877459.     5.2350090     0.0021922    -0.0078578
   2.9987845    60.0000000 CY
   0.0004288         2047.      4773388.     5.2211488     0.0022386    -0.0080514
   2.9954181    60.0000000 CY
   0.0004388         2051.      4673879.     5.2083716     0.0022852    -0.0082448
   2.9987879    60.0000000 CY
   0.0004488         2055.      4578624.     5.1966173     0.0023320    -0.0084380
   2.9999970    60.0000000 CY
   0.0004588         2059.      4487237.     5.1860221     0.0023791    -0.0086309
   2.9937937    60.0000000 CY
   0.0004688         2062.      4399601.     5.1762745     0.0024264    -0.0088236
   2.9970839    60.0000000 CY
   0.0004788         2066.      4315482.     5.1673198     0.0024739    -0.0090161
   2.9994825    60.0000000 CY
   0.0004888         2070.      4234409.     5.1587700     0.0025213    -0.0092087
   2.9983299    60.0000000 CY
   0.0004988         2073.      4156320.     5.1502456     0.0025687    -0.0094013
   2.9923810    60.0000000 CY
   0.0005088         2076.      4080583.     5.1414326     0.0026157    -0.0095943
   2.9965115    60.0000000 CY
   0.0005188         2078.      4006553.     5.1315210     0.0026620    -0.0097880
   2.9989995    60.0000000 CY
   0.0005288         2081.      3935239.     5.1222889     0.0027084    -0.0099816
   2.9999838    60.0000000 CY
   0.0005388         2082.      3865382.     5.1120958     0.0027541    -0.0101759
   2.9955273    60.0000000 CY
   0.0005488         2084.      3797238.     5.1012010     0.0027993    -0.0103707
   2.9917962    60.0000000 CY
   0.0006088         2088.      3430586.     5.0404865     0.0030684    -0.0115416
   2.9902608    60.0000000 CYT
   0.0006688         2091.      3127387.     4.9947243     0.0033402    -0.0127098
   2.9955521    60.0000000 CYT
   0.0007288         2094.      2873209.     4.9615019     0.0036157    -0.0138743
   2.9990405    60.0000000 CYT
   0.0007888         2094.      2654645.     4.9607961     0.0039128    -0.0150172
   2.9914946    60.0000000 CYT


-------------------------------------------------------------------------------
   Summary of Results for Nominal (Unfactored) Moment Capacity for Section 1
-------------------------------------------------------------------------------

Moment values interpolated at maximum compressive strain = 0.003
or maximum developed moment if pile fails at smaller strains.

 Load          Axial Thrust        Nominal Mom. Cap.      Max. Comp.
  No.             kips                 in-kip              Strain
 ----         ---------------     -----------------     -----------
```

1	0.000	2087.191	0.00300000

Note that the values of moment capacity in the table above are not factored by a strength reduction factor (phi-factor).

In ACI 318, the value of the strength reduction factor depends on whether the transverse reinforcing steel bars are tied hoops (0.65) or spirals (0.70).

The above values should be multiplied by the appropriate strength reduction factor to compute ultimate moment capacity according to ACI 318, Section 9.3.2.2 or the value required by the design standard being followed.

The following table presents factored moment capacities and corresponding bending stiffnesses computed for common resistance factor values used for reinforced concrete sections.

Axial Load No.	Resist. Factor for Moment	Nominal Moment Cap in-kips	Ult. (Fac) Ax. Thrust kips	Ult. (Fac) Moment Cap in-kips	Bend. Stiff. at Ult Mom kip-in^2
1	0.65	2087.	0.0000	1357.	10742166.
1	0.70	2087.	0.0000	1461.	10704146.
1	0.75	2087.	0.0000	1565.	10573455.

Layering Correction Equivalent Depths of Soil & Rock Layers

Layer No.	Top of Layer Below Pile Head ft	Equivalent Top Depth Below Grnd Surf ft	Same Layer Type As Layer Above	Layer is Rock or is Below Rock Layer	F0 Integral for Layer lbs	F1 Integral for Layer lbs
1	0.00	0.00	N.A.	No	0.00	15632.
2	6.0000	3.9392	No	No	15632.	N.A.

Notes: The F0 integral of Layer n+1 equals the sum of the F0 and F1 integrals for Layer n. Layering correction equivalent depths are computed only for soil types with both shallow-depth and deep-depth expressions for peak lateral load transfer. These soil types are soft and stiff clays, non-liquefied sands, and cemented c-phi soil.

Computed Values of Pile Loading and Deflection
for Lateral Loading for Load Case Number 1

Pile-head conditions are Shear and Moment (Loading Type 1)

Shear force at pile head = 7883.0 lbs
Applied moment at pile head = 403464.0 in-lbs
Axial thrust load on pile head = 0.0 lbs

Depth X	Deflect. y	Bending Moment	Shear Force	Slope S	Total Stress	Bending Stiffness	Soil Res. Es*h	Soil Spr. Lat. Load	Distrib. p
feet	inches	in-lbs	lbs	radians	psi*	in-lb^2	lb/inch	lb/inch	lb/inch
0.00	0.5120	403464.	7883.	-0.00718	0.00	6.26E+10	0.00	0.00	0.00
0.1200	0.5017	414816.	7879.	-0.00717	0.00	6.26E+10	-5.3349	15.3133	0.00
0.2400	0.4914	426156.	7868.	-0.00716	0.00	6.25E+10	-10.4503	30.6267	0.00
0.3600	0.4810	437475.	7849.	-0.00715	0.00	6.25E+10	-15.3465	45.9400	0.00
0.4800	0.4707	448762.	7824.	-0.00714	0.00	6.25E+10	-20.0242	61.2533	0.00
0.6000	0.4605	460007.	7792.	-0.00713	0.00	6.25E+10	-24.4836	76.5666	0.00
0.7200	0.4502	471202.	7753.	-0.00712	0.00	6.24E+10	-28.7254	91.8800	0.00
0.8400	0.4400	482337.	7709.	-0.00711	0.00	6.24E+10	-32.7501	107.1933	0.00
0.9600	0.4297	493404.	7659.	-0.00710	0.00	6.24E+10	-36.5581	122.5066	0.00
1.0800	0.4195	504396.	7604.	-0.00709	0.00	6.24E+10	-40.1501	137.8200	0.00
1.2000	0.4093	515304.	7544.	-0.00708	0.00	6.23E+10	-43.5265	153.1333	0.00
1.3200	0.3991	526122.	7479.	-0.00707	0.00	6.23E+10	-46.6881	168.4466	0.00
1.4400	0.3890	536843.	7409.	-0.00705	0.00	6.23E+10	-49.6353	183.7599	0.00
1.5600	0.3788	547461.	7336.	-0.00704	0.00	4.33E+10			

-52.3688	199.0733	0.00				
1.6800	0.3687	557970.	7259.	-0.00699	0.00	1.11E+10
-54.8903	214.3866	0.00				
1.8000	0.3587	568366.	7178.	-0.00692	0.00	1.10E+10
-57.2133	229.6999	0.00				
1.9200	0.3488	578643.	7094.	-0.00684	0.00	1.10E+10
-59.3415	245.0132	0.00				
2.0400	0.3390	588797.	7007.	-0.00677	0.00	1.10E+10
-61.2787	260.3266	0.00				
2.1600	0.3293	598824.	6918.	-0.00669	0.00	1.10E+10
-63.0287	275.6399	0.00				
2.2800	0.3197	608720.	6826.	-0.00661	0.00	1.10E+10
-64.5955	290.9532	0.00				
2.4000	0.3102	618483.	6732.	-0.00653	0.00	1.10E+10
-65.9831	306.2666	0.00				
2.5200	0.3009	628108.	6636.	-0.00645	0.00	1.10E+10
-67.1955	321.5799	0.00				
2.6400	0.2917	637594.	6538.	-0.00636	0.00	1.10E+10
-68.2370	336.8932	0.00				
2.7600	0.2826	646939.	6440.	-0.00628	0.00	1.10E+10
-69.1117	352.2065	0.00				
2.8800	0.2736	656141.	6340.	-0.00619	0.00	1.10E+10
-69.8240	367.5199	0.00				
3.0000	0.2647	665197.	6239.	-0.00611	0.00	1.10E+10
-70.3781	382.8332	0.00				
3.1200	0.2560	674108.	6137.	-0.00602	0.00	1.10E+10
-70.7787	398.1465	0.00				
3.2400	0.2474	682872.	6035.	-0.00593	0.00	1.10E+10
-71.0301	413.4599	0.00				
3.3600	0.2389	691488.	5933.	-0.00584	0.00	1.10E+10
-71.1369	428.7732	0.00				
3.4800	0.2306	699957.	5830.	-0.00575	0.00	1.10E+10
-71.1039	444.0865	0.00				
3.6000	0.2223	708279.	5728.	-0.00566	0.00	1.10E+10
-70.9356	459.3998	0.00				
3.7200	0.2143	716453.	5626.	-0.00556	0.00	1.10E+10
-70.6368	474.7132	0.00				
3.8400	0.2063	724482.	5524.	-0.00547	0.00	1.09E+10
-70.2123	490.0265	0.00				
3.9600	0.1985	732364.	5424.	-0.00537	0.00	1.09E+10
-69.6671	505.3398	0.00				
4.0800	0.1909	740102.	5324.	-0.00528	0.00	1.09E+10
-69.0059	520.6532	0.00				
4.2000	0.1833	747697.	5225.	-0.00518	0.00	1.09E+10
-68.2340	535.9665	0.00				
4.3200	0.1759	755150.	5128.	-0.00508	0.00	1.09E+10
-67.3561	551.2798	0.00				
4.4400	0.1687	762464.	5031.	-0.00498	0.00	1.09E+10

-66.3775	566.5931	0.00				
4.5600	0.1616	769640.	4936.	-0.00488	0.00	1.09E+10
-65.3033	581.9065	0.00				
4.6800	0.1546	776681.	4843.	-0.00478	0.00	1.09E+10
-64.1386	597.2198	0.00				
4.8000	0.1478	783589.	4752.	-0.00467	0.00	1.09E+10
-62.8888	612.5331	0.00				
4.9200	0.1412	790366.	4662.	-0.00457	0.00	1.09E+10
-61.5590	627.8465	0.00				
5.0400	0.1347	797016.	4575.	-0.00447	0.00	1.09E+10
-60.1547	643.1598	0.00				
5.1600	0.1283	803541.	4489.	-0.00436	0.00	1.09E+10
-58.6811	658.4731	0.00				
5.2800	0.1221	809944.	4406.	-0.00425	0.00	1.09E+10
-57.1438	673.7864	0.00				
5.4000	0.1161	816229.	4324.	-0.00415	0.00	1.09E+10
-55.5481	689.0998	0.00				
5.5200	0.1102	822398.	4246.	-0.00404	0.00	1.09E+10
-53.8996	704.4131	0.00				
5.6400	0.1044	828456.	4169.	-0.00393	0.00	1.09E+10
-52.2038	719.7264	0.00				
5.7600	0.09887	834406.	4095.	-0.00382	0.00	1.09E+10
-50.4663	735.0397	0.00				
5.8800	0.09345	840251.	4024.	-0.00371	0.00	1.09E+10
-48.6927	750.3531	0.00				
6.0000	0.08818	845994.	3630.	-0.00360	0.00	1.09E+10
-498.7411	8144.	0.00				
6.1200	0.08308	850704.	2734.	-0.00349	0.00	1.09E+10
-745.4382	12920.	0.00				
6.2400	0.07814	853868.	1652.	-0.00337	0.00	1.09E+10
-756.6212	13943.	0.00				
6.3600	0.07337	855463.	555.6947	-0.00326	0.00	1.09E+10
-766.6641	15048.	0.00				
6.4800	0.06875	855469.	-554.6559	-0.00315	0.00	1.09E+10
-775.4895	16242.	0.00				
6.6000	0.06430	853866.	-1677.	-0.00304	0.00	1.09E+10
-783.0205	17536.	0.00				
6.7200	0.06001	850639.	-2809.	-0.00292	0.00	1.09E+10
-789.1805	18937.	0.00				
6.8400	0.05588	845777.	-3949.	-0.00281	0.00	1.09E+10
-793.8936	20457.	0.00				
6.9600	0.05192	839268.	-5094.	-0.00270	0.00	1.09E+10
-797.0839	22109.	0.00				
7.0800	0.04811	831106.	-6243.	-0.00259	0.00	1.09E+10
-798.6761	23906.	0.00				
7.2000	0.04446	821288.	-7393.	-0.00248	0.00	1.09E+10
-798.5946	25866.	0.00				
7.3200	0.04096	809814.	-8542.	-0.00237	0.00	1.09E+10

-796.7629	28008.	0.00				
7.4400	0.03762	796687.	-9686.	-0.00227	0.00	1.09E+10
-793.1035	30354.	0.00				
7.5600	0.03444	781917.	-10814.	-0.00216	0.00	1.09E+10
-772.6263	32309.	0.00				
7.6800	0.03140	765544.	-11888.	-0.00206	0.00	1.09E+10
-719.7757	33014.	0.00				
7.8000	0.02850	747678.	-12887.	-0.00196	0.00	1.09E+10
-667.3464	33719.	0.00				
7.9200	0.02575	728429.	-13811.	-0.00186	0.00	1.09E+10
-615.4690	34424.	0.00				
8.0400	0.02313	707904.	-14660.	-0.00177	0.00	1.10E+10
-564.2607	35129.	0.00				
8.1600	0.02065	686208.	-15436.	-0.00168	0.00	1.10E+10
-513.8257	35834.	0.00				
8.2800	0.01830	663447.	-16140.	-0.00159	0.00	1.10E+10
-464.2545	36539.	0.00				
8.4000	0.01607	639724.	-16774.	-0.00150	0.00	1.10E+10
-415.6245	37244.	0.00				
8.5200	0.01396	615138.	-17338.	-0.00142	0.00	1.10E+10
-367.9997	37949.	0.00				
8.6400	0.01197	589790.	-17835.	-0.00134	0.00	1.10E+10
-321.4308	38654.	0.00				
8.7600	0.01010	563775.	-18265.	-0.00127	0.00	1.10E+10
-275.9556	39359.	0.00				
8.8800	0.00832	537187.	-18630.	-0.00122	0.00	6.23E+10
-231.5989	40064.	0.00				
9.0000	0.00657	510120.	-18931.	-0.00121	0.00	6.23E+10
-186.0134	40769.	0.00				
9.1200	0.00483	482667.	-19165.	-0.00120	0.00	6.24E+10
-139.1991	41474.	0.00				
9.2400	0.00311	454925.	-19331.	-0.00119	0.00	6.25E+10
-91.1535	42179.	0.00				
9.3600	0.00141	426994.	-19427.	-0.00118	0.00	6.25E+10
-41.8723	42884.	0.00				
9.4800	-2.86E-04	398976.	-19451.	-0.00117	0.00	6.26E+10
8.6508	43589.	0.00				
9.6000	-0.00196	370976.	-19401.	-0.00116	0.00	6.27E+10
60.4241	44294.	0.00				
9.7200	-0.00363	343102.	-19276.	-0.00115	0.00	6.27E+10
113.4576	44999.	0.00				
9.8400	-0.00529	315462.	-19073.	-0.00115	0.00	6.28E+10
167.7628	45704.	0.00				
9.9600	-0.00693	288171.	-18792.	-0.00114	0.00	6.29E+10
223.3530	46409.	0.00				
10.0800	-0.00857	261343.	-18429.	-0.00113	0.00	6.29E+10
280.2426	47114.	0.00				
10.2000	-0.01019	235096.	-17983.	-0.00113	0.00	6.30E+10

```
338.4472     47819.       0.00
   10.3200   -0.01181    209550.    -17453.   -0.00112       0.00   6.31E+10
397.9838     48524.       0.00
   10.4400   -0.01342    184830.    -16836.   -0.00112       0.00   6.31E+10
458.8698     49229.       0.00
   10.5600   -0.01503    161062.    -16131.   -0.00111       0.00   6.32E+10
521.1235     49934.       0.00
   10.6800   -0.01663    138374.    -15334.   -0.00111       0.00   6.32E+10
584.7637     50639.       0.00
   10.8000   -0.01822    116898.    -14446.   -0.00111       0.00   6.33E+10
649.8092     51345.       0.00
   10.9200   -0.01982     96771.    -13462.   -0.00110       0.00   6.33E+10
716.2789     52050.       0.00
   11.0400   -0.02141     78128.    -12382.   -0.00110       0.00   6.34E+10
784.1915     52755.       0.00
   11.1600   -0.02299     61111.    -11202.   -0.00110       0.00   6.34E+10
853.5651     53460.       0.00
   11.2800   -0.02458     45865.     -9922.   -0.00110       0.00   6.34E+10
924.4168     54165.       0.00
   11.4000   -0.02616     32535.     -8539.   -0.00110       0.00   6.34E+10
996.7628     54870.       0.00
   11.5200   -0.02774     21272.     -7051.   -0.00110       0.00   6.34E+10
1071.     55575.       0.00
   11.6400   -0.02932     12229.     -5455.   -0.00110       0.00   6.34E+10
1146.     56280.       0.00
   11.7600   -0.03090      5563.     -3749.   -0.00110       0.00   6.34E+10
1223.     56985.       0.00
   11.8800   -0.03248      1432.     -1932.   -0.00110       0.00   6.34E+10
1301.     57690.       0.00
   12.0000   -0.03406       0.00       0.00   -0.00110       0.00   6.34E+10
1381.     29197.       0.00
```

* This analysis computed pile response using nonlinear moment-curvature relationships. Values of total stress due to combined axial and bending stresses are computed only for elastic sections only and do not equal the actual stresses in concrete and steel. Stresses in concrete and steel may be interpolated from the output for nonlinear bending properties relative to the magnitude of bending moment developed in the pile.

Output Summary for Load Case No. 1:

```
Pile-head deflection             =     0.51201054 inches
Computed slope at pile head      =    -0.00718311 radians
Maximum bending moment           =        855469. inch-lbs
Maximum shear force              =        -19451. lbs
Depth of maximum bending moment  =     6.48000000 feet below pile head
Depth of maximum shear force     =     9.48000000 feet below pile head
```

Number of iterations = 75
Number of zero deflection points = 1

Summary of Pile-head Responses for Conventional Analyses

Definitions of Pile-head Loading Conditions:

Load Type 1: Load 1 = Shear, V, lbs, and Load 2 = Moment, M, in-lbs
Load Type 2: Load 1 = Shear, V, lbs, and Load 2 = Slope, S, radians
Load Type 3: Load 1 = Shear, V, lbs, and Load 2 = Rot. Stiffness, R, in-lbs/rad.
Load Type 4: Load 1 = Top Deflection, y, inches, and Load 2 = Moment, M, in-lbs
Load Type 5: Load 1 = Top Deflection, y, inches, and Load 2 = Slope, S, radians

Load Case No.	Load Type	Pile-head Load 1	Load Type	Pile-head Load 2	Axial Loading lbs	Pile-head Deflection inches	Pile-head Rotation radians	Max Shear in Pile lbs	Max Moment in Pile in-lbs
1	V, lb	7883.	M, in-lb	403464.	0.00	0.5120	-0.00718	-19451.	855469.

Maximum pile-head deflection = 0.5120105396 inches
Maximum pile-head rotation = -0.0071831059 radians = -0.411562 deg.

The analysis ended normally.

CITY OF LOS ANGELES
DEPARTMENT OF PUBLIC WORKS
Bureau of Engineering
GEOTECHNICAL ENGINEERING DIVISION

February 18, 2020

SUPPLEMENTAL GEOTECHNICAL REPORT NO. 2 – GRANADA HILLS POOL REPLACEMENT PROJECT
16730 CHATSWORTH STREET
LOS ANGELES, CALIFORNIA
W.O. E170517A **GED FILE NO. 17-074**

INTRODUCTION

The Los Angeles Department of Public Works, Bureau of Engineering, Geotechnical Engineering Division (GED) has prepared this report to provide supplemental recommendations for the project. The GED previously prepared a geotechnical engineering report dated August 22, 2017, which was approved by the Los Angeles Department of Building and Safety (LADBS), Grading Division on November 9, 2017 (Log Number 100428). In addition, we prepared a supplemental geotechnical report dated October 25, 2018, which was approved by the LADBS, Grading Division on November 14, 2018 (Log No. 105775).

PROJECT DESCRIPTION

The project has not changed significantly since our supplemental report was prepared. The purpose of this report is to provide supplemental recommendations for:

1. Storm water infiltration,
2. Portland Cement Concrete (PCC) pavements and exterior slabs.

All previous recommendations for the project remain applicable, except those specifically modified herein.

RECOMMENDATIONS

Storm Water Infiltration

The GED initially classified as Category 3 or "Infeasible" for onsite storm water infiltration, as discussed in Section 6.6 of the original report. It is important to note that this classification was based on adjusted infiltration rates that incorporate reduction factors greater than 10. The actual measured infiltration rate between 5 and 10½ feet was approximately 1¼ inches / hour. Upon further review, we recommend the site be classified as Category 1 or "Feasible" provided the infiltration zone is between 5 and 10 feet. For design purposes, an infiltration rate of ½-inch/hour may be used. We understand the system is designed with an overflow pipe that conveys storm water to the storm drain system. The location of the proposed infiltration system is shown on Sheet C400, which is attached to this report.

The infiltration system shall be designed in accordance with the LADBS' "Guidelines for Storm Water Infiltration," as presented in Bulletin 2020-118. The infiltration pit(s) shall be set back at least 15 and 10 feet from adjacent structures and property boundaries, respectively. Infiltration is not expected to result in ground settlement that could affect structures, either on or adjacent to the site. Furthermore, infiltration is not expected to result in soil saturation that could affect retaining / basement structures.

Portland Cement Concrete for Pavements and Exterior Slabs

Recommendations for PCC pavement design and exterior concrete slabs were provided in our original and supplemental reports. It is our understanding the PCC pool deck will be reinforced with No. 4 bars spaced 12 inches on center. The remaining PCC slabs will be reinforced with No. 4 bars spaced 18 inches on center. For clarification, the PCC thickness, base thickness, and earthwork are summarized below.

Location	PCC thickness (in)	CAB / CMB thickness (in)	Min. compacted fill thickness beneath CAB / CMB (in)
Pool Deck and Splash Pad	6	6	24
Heavy Traffic Area	8	8	24
Pedestrian Walkway	5	5	12

The GED considers this design to be acceptable from a geotechnical standpoint.

CLOSURE

If you have any questions about this report, please contact Easton Forcier at (213) 847-0476.



2-18-20

Easton R Forcier, GE 2948
Geotechnical Engineer II

Attachment: Sheet C400 – Utility Plan

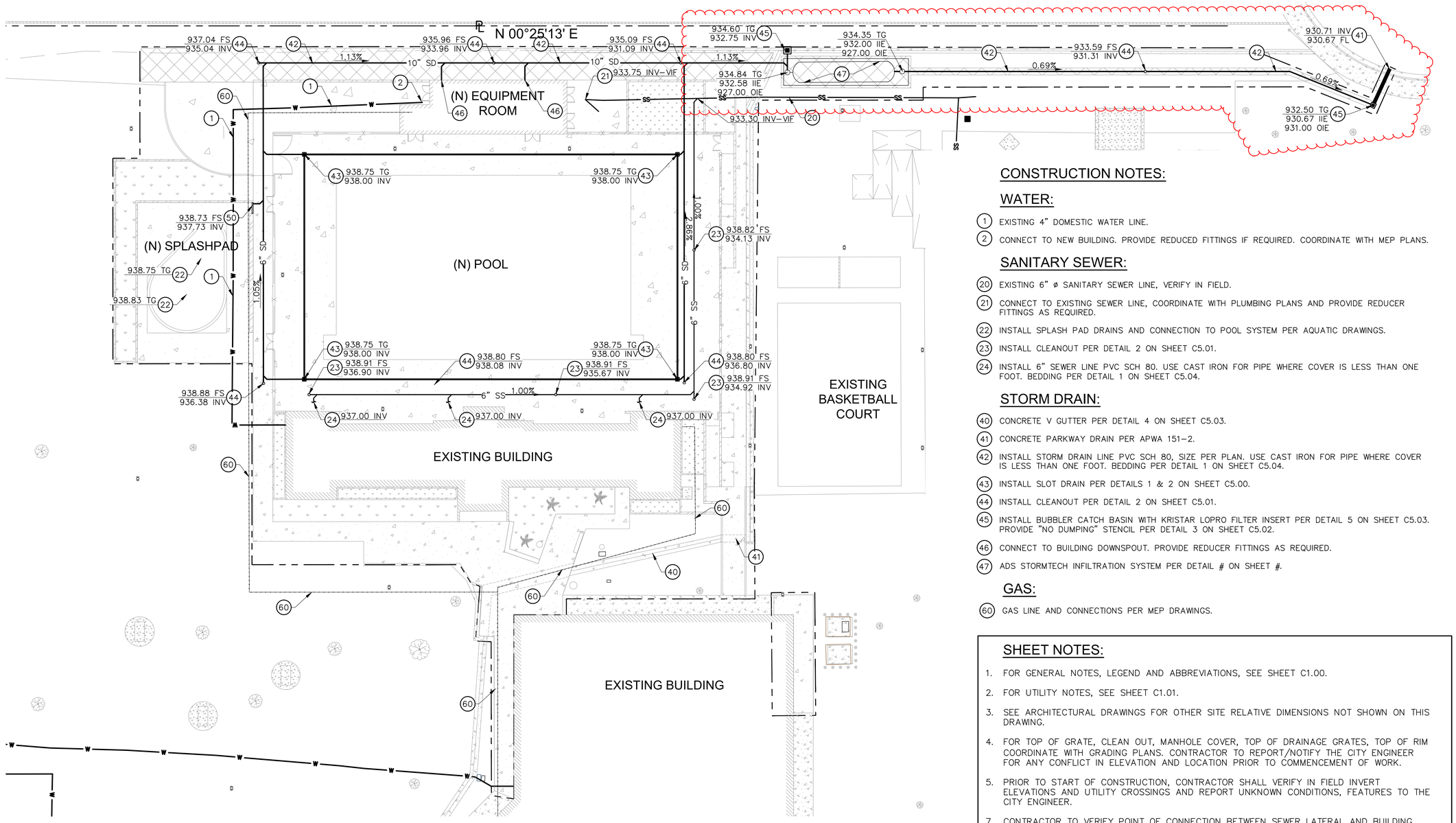

CONSTRUCTION NOTES:

WATER:

1. EXISTING 4" DOMESTIC WATER LINE.
2. CONNECT TO NEW BUILDING. PROVIDE REDUCED FITTINGS IF REQUIRED. COORDINATE WITH MEP PLANS.

SANITARY SEWER:

20. EXISTING 6" ø SANITARY SEWER LINE, VERIFY IN FIELD.
21. CONNECT TO EXISTING SEWER LINE, COORDINATE WITH PLUMBING PLANS AND PROVIDE REDUCER FITTINGS AS REQUIRED.
22. INSTALL SPLASH PAD DRAINS AND CONNECTION TO POOL SYSTEM PER AQUATIC DRAWINGS.
23. INSTALL CLEANOUT PER DETAIL 2 ON SHEET C5.01.
24. INSTALL 6" SEWER LINE PVC SCH 80. USE CAST IRON FOR PIPE WHERE COVER IS LESS THAN ONE FOOT. BEDDING PER DETAIL 1 ON SHEET C5.04.

STORM DRAIN:

40. CONCRETE V GUTTER PER DETAIL 4 ON SHEET C5.03.
41. CONCRETE PARKWAY DRAIN PER APWA 151–2.
42. INSTALL STORM DRAIN LINE PVC SCH 80, SIZE PER PLAN. USE CAST IRON FOR PIPE WHERE COVER IS LESS THAN ONE FOOT. BEDDING PER DETAIL 1 ON SHEET C5.04.
43. INSTALL SLOT DRAIN PER DETAILS 1 & 2 ON SHEET C5.00.
44. INSTALL CLEANOUT PER DETAIL 2 ON SHEET C5.01.
45. INSTALL BUBBLER CATCH BASIN WITH KRISTAR LOPRO FILTER INSERT PER DETAIL 5 ON SHEET C5.03. PROVIDE "NO DUMPING" STENCIL PER DETAIL 3 ON SHEET C5.02.
46. CONNECT TO BUILDING DOWNSPOUT. PROVIDE REDUCER FITTINGS AS REQUIRED.
47. ADS STORMTECH INFILTRATION SYSTEM PER DETAIL # ON SHEET #.

GAS:

60. GAS LINE AND CONNECTIONS PER MEP DRAWINGS.

SHEET NOTES:

1. FOR GENERAL NOTES, LEGEND AND ABBREVIATIONS, SEE SHEET C1.00.
2. FOR UTILITY NOTES, SEE SHEET C1.01.
3. SEE ARCHITECTURAL DRAWINGS FOR OTHER SITE RELATIVE DIMENSIONS NOT SHOWN ON THIS DRAWING.
4. FOR TOP OF GRATE, CLEAN OUT, MANHOLE COVER, TOP OF DRAINAGE GRATES, TOP OF RIM COORDINATE WITH GRADING PLANS. CONTRACTOR TO REPORT/NOTIFY THE CITY ENGINEER FOR ANY CONFLICT IN ELEVATION AND LOCATION PRIOR TO COMMENCEMENT OF WORK.
5. PRIOR TO START OF CONSTRUCTION, CONTRACTOR SHALL VERIFY IN FIELD INVERT ELEVATIONS AND UTILITY CROSSINGS AND REPORT UNKNOWN CONDITIONS, FEATURES TO THE CITY ENGINEER.
7. CONTRACTOR TO VERIFY POINT OF CONNECTION BETWEEN SEWER LATERAL AND BUILDING PLUMBING SEWER LAYOUT.
8. CONTRACTOR SHALL FIELD VERIFY EXISTING SEWER LINE CONNECTION, SHALL USE AND PAY FOR CCTV TO VERIFY PIPE SIZE, INVERT ELEVATION AND IDENTIFY IF THE EXISTING PIPE IS DAMAGED. IF DAMAGED THE EXISTING PIPE SHALL BE REPLACED BASED ON THE FINDINGS. IF NEW LATERAL IS REQUIRED, CONTRACTOR TO INSTALL 6"ø SEWER LATERAL AT 1% MINIMUM SLOPE.

UTILITY PLAN

20 10 0 20 40

SCALE: 1" = 20'

THE CITY OF LOS ANGELES OR ITS OFFICERS OR AGENTS SHALL NOT BE RESPONSIBLE FOR THE ACCURACY OR COMPLETENESS OF ELECTRONIC COPIES OF THIS PLAN SHEET.

TTLB TEMPLATE REVISION DATE: 02/2013
SHEET ISSUE DATE: 01 January, 2000
FILE PATH:

REVISION DATES (DESIGN STAGE ONLY)

BUREAU OF ENGINEERING
ENGINEERING
CITY OF LOS ANGELES
DEPARTMENT OF PUBLIC WORKS
CITY OF LOS ANGELES
NO. | REVISION DESCRIPTION | DATE | BY
BUILDING NO.
INDEX NO.
REGISTERED PROFESSIONAL ENGINEER VIRGILIO C. AOANAN No. C36079 Exp. 6/30/20 CIVIL STATE OF CALIFORNIA
CITY ENGINEER
DATE: 12/01/2019 | 12/01/2019 | 12/01/2019 | 12/01/2019 | 12/01/2019
GARY LEE MOORE, PE, ENV SP
ARCHITECTURAL DIVISION
ARCHITECT/ENGINEER: VIRGILIO AOANAN LIC. NO.: C36079
DESIGNED BY: VIRGILIO AOANAN
DRAWN BY: AUTUMN WAGGONER
CHECKED BY: VIRGILIO AOANAN
APPROVED BY: VIRGILIO AOANAN
VERTICAL CONTROL:
HORIZONTAL CONTROL:
SHEET TITLE: UTILITY PLAN
PROJECT: GRANADA HILLS POOL AND BATHHOUSE REPLACEMENT PROJECT
ADDRESS: 16730 CHATSWORTH STREET GRANADA HILLS, CA 91344
DCA ENGINEERS, INC.
100% CONSTRUCTION DOCUMENTS
PROJECT ISSUE DATE: 12/01/2019

WORK ORDER NO. #E170517
PLAN FILE NO. #308
DRAWING NO. C400
SHEET 9 OF SHEETS 17

PLOTTED:09/18/2019 1:00:00 PM

Asbestos and Lead-Base Paint Survey Report

Granada Hills Pool and Bathhouse Replacement Project
16730 Chatsworth Street
Granada Hills, California

Converse Project No. 18-41-273-01

February 8, 2019

Prepared For:

Sparano+Mooney Architecture
642 Moulton Avenue, Studio W-4
Los Angeles, California 90031

Prepared By:

Converse Consultants
717 S. Myrtle Avenue
Monrovia, California 91016

Converse Consultants
Geotechnical Engineering, Environmental & Groundwater Science, Inspection & Testing Services

February 8, 2019

Mr. Ludwing Juarez, Principal
Sparano+Mooney Architecture
642 Moulton Avenue, Studio W-4
Los Angeles, California 90031

Subject: **ASBESTOS and LEAD-BASED PAINT SURVEY REPORT**
Granada Hills Pool and Bathhouse Replacement Project
16730 Chatsworth Street
Granada Hills, California
Converse Project No. 18-41-273-01

Mr. Juarez:

Converse Consultants (Converse) is pleased to submit the following *Asbestos and Lead-Based Paint Survey Report.* The report summarizes the activities and the results of survey that was conducted at the referenced property (Property).

We appreciate the opportunity to be of service. Should you have any questions or comments regarding this report, please contact either George Paler at (626) 930-1258 or Norman Eke at (626) 930-1260.

Sincerely,

CONVERSE CONSULTANTS

George Paler
Certified Asbestos Consultant, #93-1136
CDPH Lead Inspector/Assessor, #I-1487
Project Environmental Scientist

Norman S. Eke
Certified Asbestos Consultant, #96-2093
Senior Vice President

Dist: 1/Addressee via Electronic Mail

Table of Contents

Page

Definitions ii

Executive Summary iii

1.0 Purpose and Scope of Services 1

2.0 Sampling Methodology 2

2.1 Asbestos 2

2.2 LBP 2

3.0 Discussion of Survey Results 4

3.1 Asbestos 4

3.2 LBP 7

4.0 Conclusions and Recommendations 9

4.1 Asbestos 9

4.2 LBP 10

5.0 Reliance and Limitations 13

Tables

Table 1 Summary of Asbestos Results & Observations
Table 2 Summary of LBPs and Lead-Containing Materials
Table 3 Summary of Bulk Lead Sample Results
Table 4 ACMs and ACCMs to be Abated
Table 5 LBPs and Lead-Containing Materials to be Removed

Appendices

Appendix A Certifications
Appendix B Asbestos
Analytical Report, Chain of Custody Documentation & Sample Location Maps
Appendix C Lead-Based Paint
XRF Logs
Appendix D Lead-Based Paint
Laboratory Analytical Report, Sample Logs and Chain of Custody
Sample Location Map

Copyright 2019 Converse Consultants

Definitions

Asbestos-Containing Material (ACM): The United States Environmental Protection Agency (EPA) has defined an ACM to be any substance containing more than one percent (1%) asbestos by weight.

Asbestos-Containing Construction Material (ACCM): The California Environmental Protection Agency (Cal/EPA) defines an ACCM as any substance containing one-tenth of one percent (0.1%) to one percent (1%) asbestos by weight.

Class I Non-friable ACM: A material containing more than one percent (1%) asbestos and that when dry, can be broken, crumbled, pulverized or reduced to powder in the course of demolition or renovation activities. Class I Non-friable ACMs include, but are not limited to, fractured or crushed asbestos cement products, transite materials, roofing felts and tiles, mastics, and resilient floor coverings.

Class II Non-friable ACM: A material containing more than one percent (1%) asbestos and that is neither friable nor Class I non-friable.

Friable ACM: A material containing more than one percent (1%) asbestos and that when dry, can be crumbled, pulverized or reduced to powder by hand pressure.

Lead-Base Paint (LBP): The Los Angeles County Department of Health Services (DHS) has defined an LBP as containing a lead concentration greater than 0.7 milligrams per centimeter squared (mg/cm^2); 600 parts per million; or 0.06 percent by weight.

Copyright 2019 Converse Consultants

Executive Summary

This report presents the results of the Converse Consultants (Converse) *Asbestos and Lead-Based Paint Survey* completed at the Granada Hills Pool and Bathhouse site located at 16730 Chatsworth Street in Granada Hills, Los Angeles County, California (herein referred to as the Property). The purpose of the survey was to identify suspect asbestos-containing materials (ACMs) and lead-based paints (LBPs) prior to renovation/remodeling of the Property.

The work was completed by environmental professionals and has been performed in accordance with our proposal dated October 25, 2018. Our work consisted of the following tasks:

- Performed a destructive survey of the property structure(s) including the roofs of the Bathhouse, Pool Equipment Building and Spectator Shelter.
- Collected bulk samples of suspect ACMs and submitted samples to the laboratory for analysis.
- Submitted samples of exterior stucco and interior wall plaster for additional laboratory analysis by 1,000-point count procedure.
- Performed testing of suspect LBPs by XRF.
- Collected bulk samples of suspect lead-based paint and submitted samples to the laboratory for analysis.
- Preparation of this report.
- Converse completed the survey on January 9, 2019.

Prior to renovation/remodeling activities, the following asbestos-containing material (ACM) will need to be abated if impacted by the planned project:

- Asphaltic Roofing Materials (Roof Core) - Bathhouse (ACM)
- Roof Penetration Mastic – Bathhouse (ACM)
- Grey Rolled Roofing – Pool Equipment Building (ACM)
- Grey Roof Mastic – Pool Equipment Building (ACM)
- Grey Rolled Roofing – Spectator Shelter (ACM)
- Roof Patch Mastic – Spectator Shelter (ACM)
- Exterior Stucco – Bathhouse (ACCM)
- Interior Plaster Walls – Bathhouse (ACCM)

Prior to any renovation and/or demolition activities, the above impacted ACMs will need to be abated. As the ACCM exterior stucco and interior beige rough-finish plaster will be impacted by the planned Bathhouse renovation, the ACCMs must be abated as well. The abatement must be performed by a Cal/OSHA licensed asbestos abatement contractor using currently asbestos trained workers and supervisors and work practices and engineering controls in accordance with Title 8 of California Code of Regulations

Copyright 2019 Converse Consultants

(CCR) 1529 and South Coast Air Quality Management District Rule 1403. ACCM waste may be disposed of as non-regulated waste. ACMs and ACCMs not abated can be managed in place through an Operations and Maintenance (O & M) plan.

In the event that suspect ACMs that have not been previously sampled are observed during the demolition/renovation activities, these materials should be assumed to contain asbestos, until such time that they can be accessed, sampled and evaluated for asbestos content.

Converse further recommends that asbestos abatement procedures be monitored by an independent Certified Asbestos Consultant knowledgeable in asbestos abatement procedures.

Based on the results of our lead-based paint (LBP) survey, a lead concentration greater than 0.7 mg/cm^2 was detected in the following components:

- Ceramic tile, painted black, at the north and south walls of the pool (lane markers).
- Ceramic sink in the Director's Office of the Bathhouse.
- Tan ceramic wall tile in the Men's Restroom of the Bathhouse.
- Ceramic urinals in the Men's Restroom of the Bathhouse.
- Ceramic toilets in the Men's and Women's Restrooms of the Bathhouse.
- Ceramic sink in the Utility Room (Women's side) of the Bathhouse.

Painted surfaces and ceramic components (tiles and plumbing fixtures) were observed to be generally in good condition.

Abatement/demolition work involving lead-containing materials must be performed by workers that have undergone the necessary lead training and are CDPH certified lead workers and supervisors.

The lead abatement activities will need to be monitored by a CDPH certified Project Monitor knowledgeable in lead stabilization and abatement procedures.

Although other painted surfaces tested did not meet the criteria for LBP, (lead content less than 0.7 mg/cm^2 or 600 ppm), concentrations of lead were detected in these other materials. Title 8 CCR 1532.1 (Lead) requires workers that perform either manual demolition or manual scraping or sanding of lead painted surfaces to undergo medical monitoring and an exposure assessment including air monitoring of the breathing zone if exposed to airborne lead dust above the Cal/OSHA Action Level of 30 micrograms per cubic meter (µg/m^3) of air over an 8-hour time weighted average.

In the event that suspect LBPs are observed during the renovation/demolition activities that were not previously sampled, these materials should be assumed to contain lead in

Copyright 2019 Converse Consultants

concentrations exceeding 0.7 mg/cm^2 or 600 ppm until such time that they can be sampled and evaluated for lead content.

Copyright 2019 Converse Consultants

1.0 Purpose and Scope of Services

This report presents the results of the Converse Consultants (Converse) *Asbestos and Lead-Based Paint Survey* completed at the Granada Hills Pool and Bathhouse site located at 16730 Chatsworth Street in Granada Hills, Los Angeles County, California (herein referred to as the Property). The purpose of the survey was to identify suspect asbestos-containing materials (ACMs) and lead-based paints (LBPs) prior to renovation/remodeling of the Property.

The work was completed by environmental professionals and has been performed in accordance with our proposal dated October 25, 2018. Our work consisted of the following tasks:

- Performed a destructive survey of the property structure(s) including the roofs of the Bathhouse, Pool Equipment Building and Spectator Shelter.
- Collected bulk samples of suspect ACMs and submitted samples to the laboratory for analysis.
- Submitted samples of exterior stucco and interior wall plaster for additional laboratory analysis by 1,000-point count procedure.
- Performed testing of suspect LBPs by XRF.
- Collected bulk samples of suspect lead-based paint and submitted samples to the laboratory for analysis.
- Preparation of this report.
- Converse completed the survey on January 9, 2019.

The survey was completed by, and under the supervision, of the following Converse employees:

- George Paler, Cal/OSHA Certified Asbestos Consultant, #93-1136, CDPH Certified Lead Inspector/Assessor, #I-1487
- Rodney Stansfield, Cal/OSHA Certified Asbestos Consultant, #97-2309; CDPH Certified Lead Inspector/Assessor, #I-4364
- Norman Eke, Cal/OSHA Certified Asbestos Consultant, #96-2093

Copies of applicable certifications have been provided in Appendix A.

All bulk asbestos samples were submitted to LA Testing located in the City of South Pasadena, California. Copies of the laboratory certificates are also provided in Appendix A.

Copyright 2019 Converse Consultants

2.0 Sampling Methodology

2.1 Asbestos

Prior to sampling, Converse visually surveyed the interior and exterior of the structures for presumed asbestos-containing materials and homogeneous areas (areas that have uniform color, texture, and appearance) in each building. Suspect materials were divided into friable and non-friable materials and placed in one of the following EPA categories:

- Surfacing Materials (sprayed or troweled-on materials)
- Thermal Systems Insulations (materials generally applied to various mechanical systems)
- Miscellaneous Materials (any materials which do not fit in the above categories)

Our sampling methodology followed the general guidelines for bulk asbestos sampling as presented in Section 40, Part 763 (AHERA) of the Code of Federal Regulations (CFR) and extended to public buildings by ASHARA in 1994. Converse collected bulk samples of the following suspect materials.

- Roofing materials
- Pool skim coat
- Concrete decking
- Exterior stucco
- Window putty
- Interior plaster walls
- Grey skim coat and plaster
- Drywall and associated joint compound
- Ceramic tile grout

The survey was completed using destructive sampling methods.

2.2 LBP

Prior to sampling, Converse visually surveyed the interior and exterior of the structures for painted building and ceramic components. Our sampling methodology generally followed the "Guidelines for the Evaluation and Control of Lead-Based Paint Hazards in Housing" published by the Department of Housing and Urban Development (HUD) in 1995.

Copyright 2019 Converse Consultants

Converse used an x-ray fluorescence (XRF) device to measure lead content in painted and ceramic surfaces. The detection level for lead was set at 0.7 mg/cm² as defined by Los Angeles County, Department of Public Health. Converse surveyed the following interior and exterior components:

- Metal fencing
- Traffic paint and signage on exterior concrete
- Diving platform
- Pool walls and floors
- Roof components, fascias, eaves, rafters, and porticos
- Handrails
- Interior and exterior walls
- Ceilings
- Floors
- Baseboards
- Doors and associated components
- Windows and associated components
- Bathroom stalls
- Ceramic components including tiles and plumbing fixtures
- Pipes, tanks, conduit, and electrical panels
- Columns and structural components
- Spectator Shelter seating

Copyright 2019 Converse Consultants

3.0 Discussion of Survey Results

3.1 Asbestos

The bulk asbestos samples were submitted to LA Testing located in South Pasadena, California. The asbestos samples were analyzed for asbestos content by EPA Test Method 600/R-93/116.

Provided in the following table is a summary of the bulk asbestos sample results. The laboratory analytical reports, sample location maps, and chain-of-custody documentation are included in Appendix B.

The buildings were generally in good condition on the day of the survey. No obvious fire or structural damage was observed.

Table 1 – Summary of Asbestos Results & Observations

Sample No.	Building Material	Percent Asbestos	Comments
01-07	Asphaltic roofing material (roofing shingles – Roof Core)	10 – 20% Chrysotile	Asbestos was detected amongst multiple layers of roofing on the Bathhouse. Approximately 5,800 square feet of roofing material. The asphaltic roofing is a non-friable ACM and was in good condition at the time of the survey. Pipes and penetrations observed on the roof were metal.
08 - 10	Roof penetration mastic	10% Chrysotile	Asbestos was detected on the mastic used at roof penetrations at vents, approximately 25 square feet. The roof penetration mastic is a non-friable ACM and was in good condition at the time of the survey.
11 - 17	Pool skim coat	None Detected	The skim coat is a cementitious material applied as a non-slip surface on the pool floor and walls. The material was in good condition at the time of the survey.
18 - 24	Concrete deck	None Detected	Concrete located on the deck surrounding the pool. The material was in good condition at the time of the survey.

Copyright 2019 Converse Consultants

Table 1 – Summary of Asbestos Results & Observations

Sample No.	Building Material	Percent Asbestos	Comments
25 - 29	Exterior stucco	0.2 – 0.49% Chrysotile (1,000-point count)	Located at the exterior northeast, northwest, southeast and southwest walls and the west entrance to the Bathhouse, approximately 1,100 square feet. The samples were further analyzed by 1,000-point count method. The exterior stucco is an ACCM and was in good condition at the time of the survey.
30 - 32	Window putty	None Detected	Located on the windows at the east side office of the Bathhouse. The putty was in good condition at the time of the survey.
33 - 35	Grey rolled roofing (Roof Core)	10 – 15% Chrysotile	Located on the roof of the Pool Equipment Building. Asbestos detected amongst multiple layers of roofing, approximately 850 square feet. The grey rolled roofing is a non-friable ACM and was in good condition at the time of the survey.
36 - 38	Black roof mastic - patches	None Detected	Present as scattered patches on the grey rolled roofing on the Pool Equipment Building. The mastic was in good condition at the time of the survey.
39 - 41	Grey roof mastic	10% Chrysotile	Located at vent pad corners and roof penetrations on the Pool Equipment Building roof, approximately 10 square feet. The mastic is a non-friable ACM and was in good condition at the time of the survey.
42 - 48	Interior plaster walls	< 0.1 – 0.5% Chrysotile (1,000-point count)	Located on the interior beige, rough-finish plaster walls inside the Bathhouse, approximately 3,500 square feet. Metal pipes inside wall cavities and along the ceiling were observed to be uninsulated. Samples of interior plaster were analyzed further by 1,000-point count method. The beige interior plaster walls are an ACCM and were in good condition at the time of the survey.
49 - 53	Grey skim coat and plaster	None Detected	Located on the stalls in the Women's Dressing Room, and Men's and Women's Restrooms in the Bathhouse. The material was in good condition at the time of the survey.

Copyright 2019 Converse Consultants

Table 1 – Summary of Asbestos Results & Observations

Sample No.	Building Material	Percent Asbestos	Comments
54 - 56	Drywall and associated joint compound	None Detected (Drywall and Joint Compound)	Located at doorway walls to Men's and Women's Restrooms in the Bathhouse. Both the drywall board and the associated joint compound are negative for asbestos. The materials were in good condition at the time of the survey.
57 - 59	Grey rolled roofing (Roof Core)	15 – 20% Chrysotile	Asbestos was detected amongst multiple layers of roofing at the Spectator Shelter, approximately 600 square feet. The rolled roofing is a non-friable ACM and was in good condition at the time of the survey.
60 - 62	Roof patch mastic	5 – 10% Chrysotile	Located as patches on the roof of the Spectator Shelter, approximately 15 square feet. No roof penetrations were observed. The mastic is a non-friable ACM and was in good condition at the time of the survey.
63 - 65	Ceramic tile grout	None Detected	Ceramic tile was observed in the Men's and Women's Staff Restroom Showers and on the west wall in the Men's Restroom. The ceramic tiles and grout were in good condition at the time of the survey.

Laboratory analysis of the bulk samples of exterior stucco (Samples 25 – 29) and interior plaster walls (samples 42 – 45 and 48) originally detected asbestos concentrations below 1%. Further analysis was required to fully evaluate asbestos concentrations at the low percentage reported by the laboratory. The samples were re-submitted for additional analysis by 1,000-point count method. The additional analyses reported that the asbestos concentrations in the exterior stucco and interior plaster walls was below 1% but above 0.1%. Per 8 CCR 1529 and South Coast Air Quality Management District (SCAQMD) Rule 1403, the exterior stucco and interior plaster walls are categorized as ACCMs. The final 1,000-point count analytical results are presented in the table above.

Sample location maps, analytical reports and chain of custody documentation are provided in Appendix B.

Copyright 2019 Converse Consultants

3.2 LBP

Based on the XRF readings, lead concentrations greater than 0.7 mg/cm^2 were detected in the following material:

Table 2 – Summary of LBPs and Lead-Containing Materials

Building Component	Paint Color	Lead Content (mg/cm^2)	Comments
Ceramic tile	Black	16.9 - 18	Ceramic tile located on the north and south pool walls as lane markers. They have been painted over with black paint. Approximately 14 square feet. The tiles are intact.
Metal window case	Green	0.7	Located on the east side exterior of the Director's Office at the Bathhouse. A bulk sample of the green paint was collected for laboratory analysis (see Sample L-7 in Table 3 below).
Metal portico frame	Green	0.9	Located on the east side exterior of the Director's Office at the Bathhouse. A bulk sample of the green paint was collected for laboratory analysis (see Sample L-8 in Table 3 below).
Ceramic sink	White	33.7	Located on the interior west wall of the Director's Office in the Bathhouse. One (1) sink in intact condition.
Ceramic wall tile	Tan	3.9	Located at the interior lower west wall in the Men's Restroom in the Bathhouse, by the urinals. Approximately 32 square feet. The tile is intact.
Ceramic urinals	White	2.8	Located at the southwest side of the Men's Restroom in the Bathhouse. Three (3) urinals. The urinals are intact. Ceramic sinks in the Men's and Women's Restrooms are negative for lead.
Ceramic toilets	White	2.8 – 3.2	Located in the Men's and Women's Restrooms in the Bathhouse, approximately seven (7) toilets total. The toilets are intact. The toilets and sinks in the Men's and Women's Staff Restrooms are negative for lead.
Ceramic sink	White	8.8	Located in the Utility Room next to the Women's Shower Hall in the Bathhouse. (One) 1 sink in intact condition.

All other tested components contained lead concentrations less than 0.7 mg/cm^2. The XRF logs are provided in Appendix C.

As part of our lead survey, Converse collected eight (8) bulk paint samples for evaluation of damaged paint and for verification purposes. The bulk samples

Copyright 2019 Converse Consultants

were logged on to Sample Logs, Chain-of-Custody documentation and the sample locations plotted on field maps. The samples were submitted to LA Testing for analysis by U.S. EPA Method SW 846 3050B/7000B (Flame Atomic Absorption Spectrometry). The laboratory analytical results are summarized in the table below.

Table 3 – Summary of Bulk Lead Sample Results

Sample No.	Building Component	Paint Color	Lead Content (PPM)	Comments
L-1	Pool floor – west side (concrete)	White	< 80	The paint is intact.
L-2	Pool wall – northeast side (concrete)	White	< 80	The paint is intact.
L-3	Pool wall – west side	Black	< 80	Black paint on pool floor and walls to mark depths and lanes. Also, over ceramic tiles. The paint is in fair condition.
L-4	Pool Equipment Building wood fascia – east side	White	280	The paint is in peeling condition.
L-5	Pool deck wall – east side (concrete)	Grey	< 80	The paint is in peeling condition.
L-6	Spectator Shelter seating – north side (concrete)	Grey	< 80	The paint is in fair condition.
L-7	Bathhouse window casing – east side (metal)	Green	< 80	The paint is intact.
L-8	Bathhouse portico frame – east side (metal)	Green	240	The paint is in fair condition.

The lead concentrations in the bulk samples collected were below the Los Angeles County Department of Health Services (DHS) definition of lead-based paint by bulk sampling of 600 parts per million (PPM). Laboratory analysis of bulk paint samples L-7 and L-8 indicate that the lead concentration as measured by XRF was not in the paint but actually in the metal substrate at the east side metal window case and portico frame at the Bathhouse.

The bulk paint sample logs, chain-of-custody documentation and sample location map are provided in Appendix D.

Copyright 2019 Converse Consultants

4.0 Conclusions and Recommendations

4.1 Asbestos

Prior to the renovation/remodeling or demolition activities, the following ACMs and ACCMs will need to be abated:

Table 4 – ACMs and ACCMs to be Abated

Building Material	Percent Asbestos	Comments
Asphaltic roofing material (roofing shingles – Roof Core)	10 – 20% Chrysotile	Asbestos was detected amongst multiple layers of roofing on the Bathhouse. Approximately 5,800 square feet of roofing material. The asphaltic roofing is a non-friable ACM and was in good condition at the time of the survey. Pipes and penetrations observed on the roof were metal.
Roof penetration mastic	10% Chrysotile	Asbestos was detected on the mastic used at roof penetrations at vents, approximately 25 square feet. The roof penetration mastic is a non-friable ACM and was in good condition at the time of the survey.
Exterior stucco	0.2 – 0.49% Chrysotile (1,000-point count)	Located at the exterior northeast, northwest, southeast and southwest walls and the west entrance to the Bathhouse, approximately 1,100 square feet. The samples were further analyzed by 1,000-point count method. The exterior stucco is an ACCM and was in good condition at the time of the survey.
Grey rolled roofing (Roof Core)	10 – 15% Chrysotile	Located on the roof of the Pool Equipment Building. Asbestos detected amongst multiple layers of roofing, approximately 850 square feet. The grey rolled roofing is a non-friable ACM and was in good condition at the time of the survey.
Grey roof mastic	10% Chrysotile	Located at vent pad corners and roof penetrations on the Pool Equipment Building roof, approximately 10 square feet. The mastic is a non-friable ACM and was in good condition at the time of the survey.
Interior plaster walls	< 0.1 – 0.5% Chrysotile (1,000-point count)	Located on the interior beige, rough-finish plaster walls inside the Bathhouse, approximately 3,500 square feet. Metal pipes inside wall cavities and along the ceiling were observed to be uninsulated. Samples of interior plaster were analyzed further by 1,000-point count method. The beige interior plaster walls are an ACCM and were in good condition at the time of the survey.

Copyright 2019 Converse Consultants

Table 4 – ACMs and ACCMs to be Abated

Building Material	Percent Asbestos	Comments
Grey rolled roofing (Roof Core)	15 – 20% Chrysotile	Asbestos was detected amongst multiple layers of roofing at the Spectator Shelter, approximately 600 square feet. The rolled roofing is a non-friable ACM and was in good condition at the time of the survey.
Roof patch mastic	5 – 10% Chrysotile	Located as patches on the roof of the Spectator Shelter, approximately 15 square feet. No roof penetrations were observed. The mastic is a non-friable ACM and was in good condition at the time of the survey.

Prior to any renovation and/or demolition activities, the above impacted ACMs will need to be abated. As the ACCM exterior stucco and interior beige rough-finish plaster will be impacted by the planned Bathhouse renovation, the ACCMs must be abated as well. The abatement must be performed by a Cal/OSHA licensed asbestos abatement contractor using currently asbestos trained workers and supervisors and work practices and engineering controls in accordance with Title 8 of California Code of Regulations (CCR) 1529 and South Coast Air Quality Management District Rule 1403. ACCM waste may be disposed of as non-regulated waste. ACMs and ACCMs not abated can be managed in place through an Operations and Maintenance (O & M) plan.

In the event that suspect ACMs that have not been previously sampled are observed during the demolition/renovation activities, these materials should be assumed to contain asbestos, until such time that they can be accessed, sampled and evaluated for asbestos content.

Converse further recommends that asbestos abatement procedures be monitored by an independent Certified Asbestos Consultant knowledgeable in asbestos abatement procedures.

4.2 LBP

A lead concentration greater than 0.7 mg/cm^2 was detected in the following components:

Table 5 – LBPs and Lead-Containing Materials to be Removed

Building Component	Paint Color	Lead Content (mg/cm^2)	Comments
Ceramic tile	Black	16.9 - 18	Ceramic tile located on the north and south pool walls as lane markers. They have been painted over with black paint. Approximately 14 square feet. The tiles are

Copyright 2019 Converse Consultants

Table 5 – LBPs and Lead-Containing Materials to be Removed

Building Component	Paint Color	Lead Content (mg/cm^2)	Comments
			intact.
Ceramic sink	White	33.7	Located on the interior west wall of the Director's Office in the Bathhouse. One (1) sink in intact condition.
Ceramic wall tile	Tan	3.9	Located at the interior lower west wall in the Men's Restroom in the Bathhouse, by the urinals. Approximately 32 square feet. The tile is intact.
Ceramic urinals	White	2.8	Located at the southwest side of the Men's Restroom in the Bathhouse. Three (3) urinals. The urinals are intact. Ceramic sinks in the Men's and Women's Restrooms are negative for lead.
Ceramic toilets	White	2.8 – 3.2	Located in the Men's and Women's Restrooms in the Bathhouse, approximately seven (7) toilets total. The toilets are intact. The toilets and sinks in the Men's and Women's Staff Restrooms are negative for lead.
Ceramic sink	White	8.8	Located in the Utility Room next to the Women's Shower Hall in the Bathhouse. (One) 1 sink in intact condition.

Painted surfaces and ceramic components (tiles and plumbing fixtures) were observed to be generally in good condition.

Abatement/demolition work involving lead-containing materials must be performed by workers that have undergone the necessary lead training and are CDPH certified lead workers and supervisors.

The lead abatement activities will need to be monitored by a CDPH certified Project Monitor knowledgeable in lead stabilization and abatement procedures.

Although other painted surfaces tested did not meet the criteria for LBP, (lead content less than 0.7 mg/cm^2 or 600 ppm), concentrations of lead were detected in these other materials. Title 8 CCR 1532.1 (Lead) requires workers that perform either manual demolition or manual scraping or sanding of lead painted surfaces to undergo medical monitoring and an exposure assessment including air monitoring of the breathing zone if exposed to airborne lead dust above the Cal/OSHA Action Level of 30 micrograms per cubic meter ($\mu g/m^3$) of air over an 8-hour time weighted average.

In the event that suspect LBPs are observed during the renovation/demolition activities that were not previously sampled, these materials should be assumed to

Copyright 2019 Converse Consultants

contain lead in concentrations exceeding 0.7 mg/cm^2 or 600 ppm until such time that they can be sampled and evaluated for lead content.

Copyright 2019 Converse Consultants

5.0 Reliance and Limitations

This report is for the sole benefit and exclusive use of Sparano+Mooney Architects in accordance with the terms and conditions attached to our proposal under which these services have been provided. Its preparation has been in accordance with generally accepted environmental practices. No other warranty, either express or implied, is made. The Scope of Services associated with the report was designed solely in accordance with the objectives, schedule, budget, and risk-management preferences of the Sparano+Mooney Architects.

This report should not be regarded as a guarantee that further ACMs or LBPs, beyond that which could be detected within the scope of this project, is present at the Property. It is not possible to absolutely confirm that no hazardous materials and/or substances exist at the Property. If none are identified as part of a limited scope of work, such a conclusion should not be construed as a guaranteed absence of such materials, but merely the results of the evaluation of the property at the time of the survey. Also, events may occur after the Property visit, which may result in contamination of the Property. Additional information, which was not found or available to Converse at the time of report preparation, may result in a modification of the conclusions and recommendations presented.

Any reliance on this report by Third Parties shall be at the Third Party's sole risk. Should the Sparano+Mooney Architects. wish to identify any additional relying parties not previously identified, a completed *Application of Authorization to Use* (see following page of this report) must be submitted to Converse Consultants.

Copyright 2019 Converse Consultants

Converse Consultants

Geotechnical Engineering, Environmental & Groundwater Science, Inspection & Testing Services

Application for Authorization to Use

TO: Converse Consultants
717 S. Myrtle Avenue
Monrovia, California 91016

Project Title & Date: _____

Project Address: _____

FROM: (Please identify name & address of person/entity applying for permission to use the referenced report.)

_____

_____

_____

Applicant _____ hereby applies for permission to use the referenced report in order to:

_____

_____

_____

Applicant wishes or needs to use the referenced report because:

_____

_____

_____

Applicant also understands and agrees that the referenced document is a copyrighted document and shall remain the sole property of Converse Consultants. Unauthorized use or copying of the report is strictly prohibited without the express written permission of Converse Consultants. *Applicant* understands and agrees that Converse Consultants may withhold such permission at its sole discretion or grant such permission upon agreement to Terms and Conditions, such as the payment of a re-use fee, amongst others.

Applicant Signature: _____

Applicant Name (print): _____

Title: _____

Date: _____

Copyright 2019 Converse Consultants

Certifications

Appendix A

Copyright 2019 Converse Consultants

STATE OF CALIFORNIA Edmund G. Brown, Jr. *Governor*

DEPARTMENT OF INDUSTRIAL RELATIONS
Division of Occupational Safety and Health
Asbestos Unit
2424 Arden Way, Suite 495
Sacramento, CA 95825-2417
(916) 574-2993 Office (916) 483-0572 Fax
http://www.dir.ca.gov/dirdatabases.html actu@dir.ca.gov

307281136C 72 79

Converse Consultants
George John Paler
717 S. Myrtle Ave.
Monrovia CA 91016

September 24, 2018

Dear Certified Asbestos Consultant or Technician:

Enclosed is your certification card. **To maintain your certification, you must abide by the rules printed on the back of the certification card.**

Your certification is valid for a period of one year. If you wish to renew your certification, you must apply for renewal at least 60 days before the expiration date shown on your card. [8 CCR 341.15(h)(1)].

Please hold and do not send copies of your required AHERA refresher renewal certificates to our office until you apply for renewal of your certification.

Certificates must be kept current if you are actively working as a CAC or CSST. The grace period is only for those who are not actively working as an asbestos consultant or site surveillance technician.

Please contact our office at the above address, fax number or email; of any changes in your contact/mailing information within 15 days of the change.

Sincerely,

Jeff Ferrell
Senior Safety Engineer

Attachment: Certification Card

cc: File



State of California
Division of Occupational Safety and Health
Certified Asbestos Consultant

George John Paler
Name

Certification No. **93-1136**

Expires on **11/19/19**

This certification was issued by the Division of Occupational Safety and Health as authorized by Sections 7180 et seq. of the Business and Professions Code.

Renewal – Card Attached (Revised 10/24/2012)

Mr. George J. Paler
Converse Consultants
717 S. Myrtle Ave
Monrovia, California 91016



State of California
Division of Occupational Safety and Health
Certified Asbestos Consultant

Rodney Dean Stansfield
Name



Certification No. 97-2309

Expiration 12/08/19

This certification was issued by the Division of Occupational Safety and Health as authorized by Sections 7180 et seq. of the Business and Professions Code.

State of California
Division of Occupational Safety and Health
Certified Asbestos Consultant



Name **Norman S Eke**

Certification No. **96-2093**

Expires on **03/07/20**

This certification was issued by the Division of Occupational Safety and Health as authorized by Sections 7180 et seq. of the Business and Professions Code.

United States Department of Commerce
National Institute of Standards and Technology

Certificate of Accreditation to ISO/IEC 17025:2005

NVLAP LAB CODE: 200232-0

LA Testing

South Pasadena, CA

is accredited by the National Voluntary Laboratory Accreditation Program for specific services, listed on the Scope of Accreditation, for:

Asbestos Fiber Analysis

This laboratory is accredited in accordance with the recognized International Standard ISO/IEC 17025:2005. This accreditation demonstrates technical competence for a defined scope and the operation of a laboratory quality management system (refer to joint ISO-ILAC-IAF Communique dated January 2009).

2018-07-01 through 2019-06-30

Effective Dates

For the National Voluntary Laboratory Accreditation Program

National Voluntary Laboratory Accreditation Program

SCOPE OF ACCREDITATION TO ISO/IEC 17025:2005

LA Testing
520 Mission Street
South Pasadena, CA 91030
Mr. Jerry Drapala Ph.D.
Phone: (323) 254-9960 Fax: (323) 254-9982
Email: jdrapala@latesting.com
http://www.latesting.com

ASBESTOS FIBER ANALYSIS — NVLAP LAB CODE 200232-0

Bulk Asbestos Analysis

Code	*Description*
18/A01	EPA -- 40 CFR Appendix E to Subpart E of Part 763, Interim Method of the Determination of Asbestos in Bulk Insulation Samples
18/A03	EPA 600/R-93/116: Method for the Determination of Asbestos in Bulk Building Materials

Airborne Asbestos Analysis

Code	*Description*
18/A02	U.S. EPA's "Interim Transmission Electron Microscopy Analytical Methods-Mandatory and Nonmandatory-and Mandatory Section to Determine Completion of Response Actions" as found in 40 CFR, Part 763, Subpart E, Appendix A.

For the National Voluntary Laboratory Accreditation Program

Effective 2018-07-01 through 2019-06-30

AIHA Laboratory Accreditation Programs, LLC

acknowledges that

LA Testing

520 Mission Street, South Pasadena, CA 91030

Laboratory ID: 102814

along with all premises from which key activities are performed, as listed above, has fulfilled the requirements of the AIHA Laboratory Accreditation Programs (AIHA-LAP), LLC accreditation to the ISO/IEC 17025:2005 international standard, *General Requirements for the Competence of Testing and Calibration Laboratories* in the following:

LABORATORY ACCREDITATION PROGRAMS

✓	**INDUSTRIAL HYGIENE**	Accreditation Expires: April 01, 2020
✓	**ENVIRONMENTAL LEAD**	Accreditation Expires: April 01, 2020
✓	**ENVIRONMENTAL MICROBIOLOGY**	Accreditation Expires: April 01, 2020
☐	**FOOD**	Accreditation Expires:
☐	**UNIQUE SCOPES**	Accreditation Expires:

Specific Field(s) of Testing (FoT)/Method(s) within each Accreditation Program for which the above named laboratory maintains accreditation is outlined on the attached **Scope of Accreditation**. Continued accreditation is contingent upon successful on-going compliance with ISO/IEC 17025:2005 and AIHA-LAP, LLC requirements. This certificate is not valid without the attached **Scope of Accreditation**. Please review the AIHA-LAP, LLC website (www.aihaaccreditedlabs.org) for the most current Scope.

Beth Bair

Elizabeth Bair
Chairperson, Analytical Accreditation Board

Cheryl O. Morton

Cheryl O. Morton
Managing Director, AIHA Laboratory Accreditation Programs, LLC

Revision 16: 03/21/2018

Date Issued: 04/30/2018

AIHA Laboratory Accreditation Programs, LLC
SCOPE OF ACCREDITATION

LA Testing
520 Mission Street, South Pasadena, CA 91030

Laboratory ID: **102814**
Issue Date: 04/30/2018

The laboratory is approved for those specific field(s) of testing/methods listed in the table below. Clients are urged to verify the laboratory's current accreditation status for the particular field(s) of testing/Methods, since these can change due to proficiency status, suspension and/or withdrawal of accreditation.

The EPA recognizes the AIHA-LAP, LLC ELLAP program as meeting the requirements of the National Lead Laboratory Accreditation Program (NLLAP) established under Title X of the Residential Lead-Based Paint Hazard Reduction Act of 1992 and includes paint, soil and dust wipe analysis. Air and composited wipes analyses are not included as part of the NLLAP.

Environmental Lead Laboratory Accreditation Program (ELLAP)

Initial Accreditation Date: 11/01/2003

Field of Testing (FoT)	Technology sub-type/ Detector	Method	Method Description *(for internal methods only)*
Paint		EPA SW-846 3050B	
		EPA SW-846 7000B	
Soil		EPA SW-846 3050B	
		EPA SW-846 7000B	
Settled Dust by Wipe		EPA SW-846 3050B	
		EPA SW-846 7000B	
Airborne Dust		NIOSH 7082	

A complete listing of currently accredited Environmental Lead laboratories is available on the AIHA-LAP, LLC website at: http://www.aihaaccreditedlabs.org

Asbestos

Analytical Reports,
Chain of Custody Documentation, &
Sample Location Maps

Appendix B

Copyright 2019 Converse Consultants

LA Testing
520 Mission Street South Pasadena, CA 91030
Tel/Fax: (323) 254-9960 / (323) 254-9982
http://www.LATesting.com / pasadenalab@latesting.com

LA Testing Order: 321900561
Customer ID: 32CONV56
Customer PO: 184127301
Project ID:

Attention: George Paler
Converse Consultants
717 S Myrtle Avenue
Monrovia, CA 91016

Phone: (626) 930-1258
Fax: (626) 930-1212
Received Date: 01/08/2019 4:40 PM
Analysis Date: 01/16/2019
Collected Date: 01/08/2019

Project: 18-41-273-01 Sparano/ Granada Hills Pool

Test Report: Asbestos Analysis of Bulk Materials via EPA 600/R-93/116 Method using Polarized Light Microscopy

			Non-Asbestos		Asbestos
Sample	**Description**	**Appearance**	**% Fibrous**	**% Non-Fibrous**	**% Type**
01-Roofing-1 *321900561-0001*	Bath-house roof, NW - Roof core	Gray/Black Fibrous Heterogeneous	20% Glass	80% Non-fibrous (Other)	None Detected
01-Roofing-2 *321900561-0001A*	Bath-house roof, NW - Roof core	Black Fibrous Homogeneous	20% Cellulose	70% Non-fibrous (Other)	10% Chrysotile
01-Roofing-3 *321900561-0001B*	Bath-house roof, NW - Roof core	Black Fibrous Homogeneous	40% Cellulose	60% Non-fibrous (Other)	None Detected
01-Roofing-4 *321900561-0001C*	Bath-house roof, NW - Roof core	Black Fibrous Homogeneous	40% Cellulose	60% Non-fibrous (Other)	None Detected
01-Roofing-5 *321900561-0001D*	Bath-house roof, NW - Roof core	Black Fibrous Homogeneous	40% Cellulose	60% Non-fibrous (Other)	None Detected
01-Tar *321900561-0001E*	Bath-house roof, NW - Roof core	Black Non-Fibrous Homogeneous		100% Non-fibrous (Other)	None Detected
02-Roofing-1 *321900561-0002*	Bath-house roof, NE - Roof core	Gray/Black Fibrous Heterogeneous	20% Glass	80% Non-fibrous (Other)	None Detected
02-Roofing-2 *321900561-0002A*	Bath-house roof, NE - Roof core	Black Fibrous Homogeneous	20% Cellulose	70% Non-fibrous (Other)	10% Chrysotile
02-Roofing-3 *321900561-0002B*	Bath-house roof, NE - Roof core	Black Fibrous Homogeneous	40% Cellulose	60% Non-fibrous (Other)	None Detected
02-Roofing-4 *321900561-0002C*	Bath-house roof, NE - Roof core	Black Fibrous Homogeneous	40% Cellulose	60% Non-fibrous (Other)	None Detected
02-Roofing-5 *321900561-0002D*	Bath-house roof, NE - Roof core	Black Fibrous Homogeneous	40% Cellulose	60% Non-fibrous (Other)	None Detected
02-Tar *321900561-0002E*	Bath-house roof, NE - Roof core	Black Non-Fibrous Homogeneous		100% Non-fibrous (Other)	None Detected
03-Roofing-1 *321900561-0003*	Bath-house roof, east, over office - Roof core	Gray/Black Fibrous Heterogeneous	15% Cellulose	70% Non-fibrous (Other)	15% Chrysotile
03-Roofing-2 *321900561-0003A*	Bath-house roof, east, over office - Roof core	Black Fibrous Heterogeneous	20% Glass	80% Non-fibrous (Other)	None Detected
03-Roofing-3 *321900561-0003B*	Bath-house roof, east, over office - Roof core	Gray/Black Fibrous Heterogeneous	20% Glass	80% Non-fibrous (Other)	None Detected
03-Roofing-4 *321900561-0003C*	Bath-house roof, east, over office - Roof core	Gray/Black Fibrous Heterogeneous	20% Glass	80% Non-fibrous (Other)	None Detected

Report amended: 01/16/2019 17:10:47 Replaces initial report from: 01/16/2019 16:48:00 Reason Code: Data Entry-Change to Location

LA Testing
520 Mission Street South Pasadena, CA 91030
Tel/Fax: (323) 254-9960 / (323) 254-9982
http://www.LATesting.com / pasadenalab@latesting.com

LA Testing Order: 321900561
Customer ID: 32CONV56
Customer PO: 184127301
Project ID:

Test Report: Asbestos Analysis of Bulk Materials via EPA 600/R-93/116 Method using Polarized Light Microscopy

Sample	Description	Appearance	Non-Asbestos % Fibrous	Non-Asbestos % Non-Fibrous	Asbestos % Type
03-Roofing-5 *321900561-0003D*	Bath-house roof, east, over office - Roof core	Black Fibrous Homogeneous	40% Cellulose	60% Non-fibrous (Other)	None Detected
03-Roofing-6 *321900561-0003E*	Bath-house roof, east, over office - Roof core	Black Fibrous Homogeneous	40% Cellulose	60% Non-fibrous (Other)	None Detected
03-Tar *321900561-0003F*	Bath-house roof, east, over office - Roof core	Black Non-Fibrous Homogeneous		100% Non-fibrous (Other)	None Detected
04-Roofing-1 *321900561-0004*	Bath-house roof, center - Roof core	Gray/Black Fibrous Heterogeneous	20% Cellulose	70% Non-fibrous (Other)	10% Chrysotile
04-Roofing-2 *321900561-0004A*	Bath-house roof, center - Roof core	Black Fibrous Heterogeneous	20% Glass	80% Non-fibrous (Other)	None Detected
04-Roofing-3 *321900561-0004B*	Bath-house roof, center - Roof core	Gray/Black Fibrous Heterogeneous	40% Cellulose	60% Non-fibrous (Other)	None Detected
04-Roofing-4 *321900561-0004C*	Bath-house roof, center - Roof core	Black Non-Fibrous Homogeneous	40% Cellulose	60% Non-fibrous (Other)	None Detected
04-Roofing-5 *321900561-0004D*	Bath-house roof, center - Roof core	Black Fibrous Homogeneous	40% Cellulose	60% Non-fibrous (Other)	None Detected
04-Tar *321900561-0004E*	Bath-house roof, center - Roof core	Black Non-Fibrous Homogeneous		100% Non-fibrous (Other)	None Detected
05-Roofing 1 *321900561-0005*	Bath-house roof, west, over entrance - Roof core	Gray/Black Fibrous Homogeneous	20% Glass	80% Non-fibrous (Other)	None Detected
05-Roofing 2 *321900561-0005A*	Bath-house roof, west, over entrance - Roof core	Gray/Black Fibrous Homogeneous	20% Glass	80% Non-fibrous (Other)	None Detected
05-Roofing 3 *321900561-0005B*	Bath-house roof, west, over entrance - Roof core	Gray/Black Non-Fibrous Homogeneous	15% Cellulose 10% Glass	65% Non-fibrous (Other)	10% Chrysotile
05-Roofing 4 *321900561-0005C*	Bath-house roof, west, over entrance - Roof core	Black Fibrous Homogeneous	30% Cellulose	50% Non-fibrous (Other)	20% Chrysotile
06-Roofing 1 *321900561-0006*	Bath-house roof, SE - Roof core	Gray/Black Fibrous Homogeneous	20% Glass	80% Non-fibrous (Other)	None Detected
06-Roofing 2 *321900561-0006A*	Bath-house roof, SE - Roof core	Gray/Black Fibrous Homogeneous	20% Glass	80% Non-fibrous (Other)	None Detected
06-Roofing 3 *321900561-0006B*	Bath-house roof, SE - Roof core	Gray/Black Fibrous Homogeneous	20% Glass	80% Non-fibrous (Other)	None Detected
06-Roofing 4 *321900561-0006C*	Bath-house roof, SE - Roof core	Black Fibrous Homogeneous	25% Cellulose	75% Non-fibrous (Other)	None Detected
06-Roofing 5 *321900561-0006D*	Bath-house roof, SE - Roof core	Black Fibrous Homogeneous	30% Glass	70% Non-fibrous (Other)	None Detected
06-Roofing 6 *321900561-0006E*	Bath-house roof, SE - Roof core	Black Fibrous Homogeneous	10% Cellulose	75% Non-fibrous (Other)	15% Chrysotile

Report amended: 01/16/2019 17:10:47 Replaces initial report from: 01/16/2019 16:48:00 Reason Code: Data Entry-Change to Location

LA Testing
520 Mission Street South Pasadena, CA 91030
Tel/Fax: (323) 254-9960 / (323) 254-9982
http://www.LATesting.com / pasadenalab@latesting.com

LA Testing Order: 321900561
Customer ID: 32CONV56
Customer PO: 184127301
Project ID:

Test Report: Asbestos Analysis of Bulk Materials via EPA 600/R-93/116 Method using Polarized Light Microscopy

			Non-Asbestos		Asbestos
Sample	**Description**	**Appearance**	**% Fibrous**	**% Non-Fibrous**	**% Type**
07-Roofing 1 *321900561-0007*	Bath-house roof, SW - Roof core	Gray/Black Fibrous Homogeneous	20% Glass	80% Non-fibrous (Other)	None Detected
07-Roofing 2 *321900561-0007A*	Bath-house roof, SW - Roof core	Gray/Black Fibrous Homogeneous	20% Glass	80% Non-fibrous (Other)	None Detected
07-Roofing 3 *321900561-0007B*	Bath-house roof, SW - Roof core	Black Fibrous Homogeneous	20% Cellulose	80% Non-fibrous (Other)	None Detected
07-Roofing 4 *321900561-0007C*	Bath-house roof, SW - Roof core	Black Fibrous Homogeneous	20% Cellulose	80% Non-fibrous (Other)	None Detected
07-Roofing 5 *321900561-0007D*	Bath-house roof, SW - Roof core	Black Fibrous Homogeneous	5% Cellulose	80% Non-fibrous (Other)	15% Chrysotile
08 *321900561-0008*	Bathouse roof, southeast - Penetration mastic	Gray/Black Non-Fibrous Homogeneous	10% Cellulose	90% Non-fibrous (Other)	None Detected
09 *321900561-0009*	Bathouse roof, west - Penetration mastic	Gray/Black Non-Fibrous Homogeneous		90% Non-fibrous (Other)	10% Chrysotile
10 *321900561-0010*	Bathouse roof, north - Penetration mastic	Gray/Black Fibrous Homogeneous		90% Non-fibrous (Other)	10% Chrysotile
11 *321900561-0011*	Pool, floor, northwest - Pool skim coat	White Non-Fibrous Homogeneous		100% Non-fibrous (Other)	None Detected
12 *321900561-0012*	Pool, wall, northwest - Pool skim coat	White Non-Fibrous Homogeneous		100% Non-fibrous (Other)	None Detected
13 *321900561-0013*	Pool, floor, northeast - Pool skim coat	White Non-Fibrous Homogeneous		100% Non-fibrous (Other)	None Detected
14 *321900561-0014*	Pool, floor, center - Pool skim coat	White Non-Fibrous Homogeneous		100% Non-fibrous (Other)	None Detected
15 *321900561-0015*	Pool, floor, southwest - Pool skim coat	White Non-Fibrous Homogeneous		100% Non-fibrous (Other)	None Detected
16 *321900561-0016*	Pool, floor, southeast - Pool skim coat	White Non-Fibrous Homogeneous		100% Non-fibrous (Other)	None Detected
17 *321900561-0017*	Pool, floor, SE/center - Pool skim coat	White Non-Fibrous Homogeneous		100% Non-fibrous (Other)	None Detected
18-Caulk *321900561-0018*	Pool yard, SW corner of pool - Concrete	Gray/White Non-Fibrous Heterogeneous		100% Non-fibrous (Other)	None Detected
18-Concrete *321900561-0018A*	Pool yard, SW corner of pool - Concrete	Gray Non-Fibrous Homogeneous		100% Non-fibrous (Other)	None Detected
19 *321900561-0019*	Pool yard, SW of pool - Concrete	Gray Non-Fibrous Homogeneous		100% Non-fibrous (Other)	None Detected
20-Coating *321900561-0020*	Pool yard, west of pool - Concrete	White/Red Non-Fibrous Heterogeneous		100% Non-fibrous (Other)	None Detected

Report amended: 01/16/2019 17:10:47 Replaces initial report from: 01/16/2019 16:48:00 Reason Code: Data Entry-Change to Location

LA Testing
520 Mission Street South Pasadena, CA 91030
Tel/Fax: (323) 254-9960 / (323) 254-9982
http://www.LATesting.com / pasadenalab@latesting.com

LA Testing Order:	321900561
Customer ID:	32CONV56
Customer PO:	184127301
Project ID:	

Test Report: Asbestos Analysis of Bulk Materials via EPA 600/R-93/116 Method using Polarized Light Microscopy

Sample	Description	Appearance	Non-Asbestos % Fibrous	Non-Asbestos % Non-Fibrous	Asbestos % Type
20-Concrete *321900561-0020A*	Pool yard, west of pool - Concrete	Gray Non-Fibrous Homogeneous		100% Non-fibrous (Other)	None Detected
21 *321900561-0021*	Pool yard, NW of pool - Concrete	Gray Non-Fibrous Homogeneous		100% Non-fibrous (Other)	None Detected
22 *321900561-0022*	Pool yard, north of pool - Concrete	Gray Non-Fibrous Homogeneous		100% Non-fibrous (Other)	None Detected
23 *321900561-0023*	Pool yard, NE of pool - Concrete	Gray Non-Fibrous Homogeneous		100% Non-fibrous (Other)	None Detected
24 *321900561-0024*	Pool yard, east of pool - Concrete	Gray Non-Fibrous Homogeneous		100% Non-fibrous (Other)	None Detected
25 *321900561-0025*	Bathhouse exterior, west wall, north - Exterior stucco	Tan Non-Fibrous Homogeneous		100% Non-fibrous (Other)	<1% Chrysotile
26 *321900561-0026*	Bathhouse exterior, west entrance - Exterior stucco	Tan Non-Fibrous Homogeneous		100% Non-fibrous (Other)	<1% Chrysotile
27 *321900561-0027*	Bathhouse exterior, south wall, west - Exterior stucco	Tan Non-Fibrous Homogeneous		100% Non-fibrous (Other)	<1% Chrysotile
28 *321900561-0028*	Bathhouse exterior, NE corner - Exterior stucco	Gray/Tan Non-Fibrous Homogeneous		100% Non-fibrous (Other)	<1% Chrysotile
29 *321900561-0029*	Bathhouse exterior, east wall south - Exterior stucco	Tan Non-Fibrous Homogeneous		100% Non-fibrous (Other)	<1% Chrysotile
30 *321900561-0030*	Office exterior, north - Window putty	White/Green Non-Fibrous Homogeneous		100% Non-fibrous (Other)	None Detected
31 *321900561-0031*	Office exterior, east - Window putty	White/Green Non-Fibrous Homogeneous		100% Non-fibrous (Other)	None Detected
32 *321900561-0032*	Office exterior, south - Window putty	Tan Non-Fibrous Homogeneous		100% Non-fibrous (Other)	None Detected
33-Roofing-1 *321900561-0033*	Pool equiptment bldg, roof SE side - Roof core- grey rolled roofing	Gray/Black Fibrous Heterogeneous	20% Cellulose	70% Non-fibrous (Other)	10% Chrysotile
33-Roofing-2 *321900561-0033A*	Pool equiptment bldg, roof SE side - Roof core- grey rolled roofing	Black Fibrous Homogeneous	40% Cellulose	60% Non-fibrous (Other)	None Detected
33-Roofing-3 *321900561-0033B*	Pool equiptment bldg, roof SE side - Roof core- grey rolled roofing	Black Fibrous Homogeneous	40% Cellulose	60% Non-fibrous (Other)	None Detected
33-Roofing-4 *321900561-0033C*	Pool equiptment bldg, roof SE side - Roof core- grey rolled roofing	Black Fibrous Homogeneous	40% Cellulose	60% Non-fibrous (Other)	None Detected

Report amended: 01/16/2019 17:10:47 Replaces initial report from: 01/16/2019 16:48:00 Reason Code: Data Entry-Change to Location

LA Testing
520 Mission Street South Pasadena, CA 91030
Tel/Fax: (323) 254-9960 / (323) 254-9982
http://www.LATesting.com / pasadenalab@latesting.com

LA Testing Order: 321900561
Customer ID: 32CONV56
Customer PO: 184127301
Project ID:

Test Report: Asbestos Analysis of Bulk Materials via EPA 600/R-93/116 Method using Polarized Light Microscopy

Sample	Description	Appearance	Non-Asbestos % Fibrous	Non-Asbestos % Non-Fibrous	Asbestos % Type
33-Roofing-5 *321900561-0033D*	Pool equiptment bldg, roof SE side - Roof core- grey rolled roofing	Black Fibrous Homogeneous	40% Cellulose	60% Non-fibrous (Other)	None Detected
33-Tar *321900561-0033E*	Pool equiptment bldg, roof SE side - Roof core- grey rolled roofing	Black Non-Fibrous Homogeneous		100% Non-fibrous (Other)	None Detected
34-Roofing-1 *321900561-0034*	Pool equiptment bldg, roof center - Roof core- grey rolled roofing	Gray/Black Fibrous Heterogeneous	10% Cellulose 10% Glass	70% Non-fibrous (Other)	10% Chrysotile
34-Roofing-2 *321900561-0034A*	Pool equiptment bldg, roof center - Roof core- grey rolled roofing	Black Fibrous Homogeneous	30% Cellulose	70% Non-fibrous (Other)	None Detected
34-Roofing-3 *321900561-0034B*	Pool equiptment bldg, roof center - Roof core- grey rolled roofing	Black Fibrous Homogeneous	30% Cellulose	70% Non-fibrous (Other)	None Detected
34-Tar *321900561-0034C*	Pool equiptment bldg, roof center - Roof core- grey rolled roofing	Black Non-Fibrous Homogeneous		100% Non-fibrous (Other)	None Detected
35-Roofing 1 *321900561-0035*	Pool equiptment bldg, roof NW side - Roof core- grey rolled roofing	Gray/Black Fibrous Homogeneous	5% Cellulose 10% Glass	70% Non-fibrous (Other)	15% Chrysotile
35-Roofing 2 *321900561-0035A*	Pool equiptment bldg, roof NW side - Roof core- grey rolled roofing	Black Non-Fibrous Homogeneous	70% Cellulose 5% Synthetic	25% Non-fibrous (Other)	None Detected
35-Roofing 3 *321900561-0035B*	Pool equiptment bldg, roof NW side - Roof core- grey rolled roofing	Black Non-Fibrous Homogeneous	70% Cellulose 5% Synthetic	25% Non-fibrous (Other)	None Detected
36 *321900561-0036*	Pool equiptment bldg, roof W center - Black roof mastic- patches	Black Non-Fibrous Homogeneous	5% Cellulose	95% Non-fibrous (Other)	None Detected
37 *321900561-0037*	Pool equiptment bldg, roof SE side - Black roof mastic- patches	Black Non-Fibrous Homogeneous	5% Cellulose	95% Non-fibrous (Other)	None Detected
38 *321900561-0038*	Pool equiptment bldg, roof NE side - Black roof mastic- patches	Black Non-Fibrous Homogeneous		100% Non-fibrous (Other)	None Detected
39 *321900561-0039*	Pool equiptment bldg, roof N center vent pad corner - Grey roof mastic	Gray/Black Non-Fibrous Homogeneous		90% Non-fibrous (Other)	10% Chrysotile
40 *321900561-0040*	Pool equiptment bldg, roof S pad corner - Grey roof mastic	Gray/Black Non-Fibrous Homogeneous		90% Non-fibrous (Other)	10% Chrysotile
41 *321900561-0041*	Pool equiptment bldg, roof SE roof pen vent - Grey roof mastic	Gray/Black Fibrous Homogeneous		90% Non-fibrous (Other)	10% Chrysotile
42-Finish Coat *321900561-0042*	Bath house bldg-utility rm women's side, by door - Interior plaster walls	Tan Non-Fibrous Homogeneous		100% Non-fibrous (Other)	<1% Chrysotile

Report amended: 01/16/2019 17:10:47 Replaces initial report from: 01/16/2019 16:48:00 Reason Code: Data Entry-Change to Location

LA Testing
520 Mission Street South Pasadena, CA 91030
Tel/Fax: (323) 254-9960 / (323) 254-9982
http://www.LATesting.com / pasadenalab@latesting.com

LA Testing Order:	321900561
Customer ID:	32CONV56
Customer PO:	184127301
Project ID:	

Test Report: Asbestos Analysis of Bulk Materials via EPA 600/R-93/116 Method using Polarized Light Microscopy

Sample	Description	Appearance	Non-Asbestos % Fibrous	Non-Asbestos % Non-Fibrous	Asbestos % Type
42-Base Coat *321900561-0042A*	Bath house bldg-utility rm women's side, by door - Interior plaster walls	Gray Non-Fibrous Homogeneous		100% Non-fibrous (Other)	None Detected
43-Finish Coat *321900561-0043*	Bath house bldg-utility rm women's restroom, N wall - Interior plaster walls	White/Beige Non-Fibrous Homogeneous		100% Non-fibrous (Other)	<1% Chrysotile
43-Base Coat *321900561-0043A*	Bath house bldg-utility rm women's restroom, N wall - Interior plaster walls	Gray Non-Fibrous Homogeneous		100% Non-fibrous (Other)	None Detected
44-Finish Coat *321900561-0044*	Bath house bldg-utility rm women's shower, S wall - Interior plaster walls	White/Beige Non-Fibrous Homogeneous		100% Non-fibrous (Other)	<1% Chrysotile
44-Base Coat *321900561-0044A*	Bath house bldg-utility rm women's shower, S wall - Interior plaster walls	Gray Non-Fibrous Homogeneous		100% Non-fibrous (Other)	None Detected
45-Finish Coat *321900561-0045*	Bath house bldg-utility rm hallway o/s man's dressing rm - Interior plaster walls	Tan Non-Fibrous Homogeneous		100% Non-fibrous (Other)	<1% Chrysotile
45-Base Coat *321900561-0045A*	Bath house bldg-utility rm hallway o/s man's dressing rm - Interior plaster walls	Gray Non-Fibrous Homogeneous		100% Non-fibrous (Other)	None Detected
46-Finish Coat *321900561-0046*	Bath house bldg-utility rm directors office, S wall - Interior plaster walls	Tan Non-Fibrous Homogeneous		100% Non-fibrous (Other)	None Detected
46-Base Coat *321900561-0046A*	Bath house bldg-utility rm directors office, S wall - Interior plaster walls	Gray Non-Fibrous Homogeneous		100% Non-fibrous (Other)	None Detected
47-Finish Coat *321900561-0047*	Bath house bldg-utility rm boys check rm, E wall - Interior plaster walls	Tan Non-Fibrous Homogeneous		100% Non-fibrous (Other)	None Detected
47-Base Coat *321900561-0047A*	Bath house bldg-utility rm boys check rm, E wall - Interior plaster walls	Gray Non-Fibrous Homogeneous		100% Non-fibrous (Other)	None Detected
48-Finish Coat *321900561-0048*	Bath house bldg-utility rm hall o/s mens shower, N wall - Interior plaster walls	Tan Non-Fibrous Homogeneous		100% Non-fibrous (Other)	<1% Chrysotile
48-Base Coat *321900561-0048A*	Bath house bldg-utility rm hall o/s mens shower, N wall - Interior plaster walls	Gray Non-Fibrous Homogeneous		100% Non-fibrous (Other)	None Detected
49-Skim Coat *321900561-0049*	Bath jhhouse bldg-womens RR stalls - Grey skim coat & plaster	Gray Non-Fibrous Homogeneous		100% Non-fibrous (Other)	None Detected

Report amended: 01/16/2019 17:10:47 Replaces initial report from: 01/16/2019 16:48:00 Reason Code: Data Entry-Change to Location

LA Testing
520 Mission Street South Pasadena, CA 91030
Tel/Fax: (323) 254-9960 / (323) 254-9982
http://www.LATesting.com / pasadenalab@latesting.com

LA Testing Order:	321900561
Customer ID:	32CONV56
Customer PO:	184127301
Project ID:	

Test Report: Asbestos Analysis of Bulk Materials via EPA 600/R-93/116 Method using Polarized Light Microscopy

Sample	Description	Appearance	Non-Asbestos % Fibrous	Non-Asbestos % Non-Fibrous	Asbestos % Type
49-Plaster *321900561-0049A*	Bath jhhouse bldg-womens RR stalls - Grey skim coat & plaster	Gray Non-Fibrous Homogeneous		100% Non-fibrous (Other)	None Detected
50-Skim Coat *321900561-0050*	Bath jhhouse bldg-womens dressing rm stalls SW - Grey skim coat & plaster	Gray Non-Fibrous Homogeneous		100% Non-fibrous (Other)	None Detected
50-Plaster *321900561-0050A*	Bath jhhouse bldg-womens dressing rm stalls SW - Grey skim coat & plaster	Gray Non-Fibrous Homogeneous		100% Non-fibrous (Other)	None Detected
51-Skim Coat *321900561-0051*	Bath jhhouse bldg-womens dressing rm stalls NE - Grey skim coat & plaster	Gray Non-Fibrous Homogeneous		100% Non-fibrous (Other)	None Detected
51-Plaster *321900561-0051A*	Bath jhhouse bldg-womens dressing rm stalls NE - Grey skim coat & plaster	Gray Non-Fibrous Homogeneous		100% Non-fibrous (Other)	None Detected
52 *321900561-0052*	Bath jhhouse bldg-womens dressing rm stalls SE - Grey skim coat & plaster	Gray Non-Fibrous Homogeneous		100% Non-fibrous (Other)	None Detected
53 *321900561-0053*	Bath jhhouse bldg-mens RR stalls NW - Grey skim coat & plaster	Gray Non-Fibrous Homogeneous		100% Non-fibrous (Other)	None Detected
54-Drywall *321900561-0054*	Bath house bldg-mens RR S wall by door - Drywall/ joint compound	Brown/White Fibrous Heterogeneous	20% Cellulose	80% Non-fibrous (Other)	None Detected
54-Joint Compound *321900561-0054A*	Bath house bldg-mens RR S wall by door - Drywall/ joint compound	White Non-Fibrous Homogeneous		100% Non-fibrous (Other)	None Detected
55-Drywall *321900561-0055*	Bath house bldg- O/S mens RR nt mens shower - Drywall/ joint compound	Brown/White Fibrous Heterogeneous	20% Cellulose	80% Non-fibrous (Other)	None Detected
55-Joint Compound *321900561-0055A*	Bath house bldg- O/S mens RR nt mens shower - Drywall/ joint compound	White Non-Fibrous Homogeneous		100% Non-fibrous (Other)	None Detected
56-Drywall *321900561-0056*	Bath house bldg-womens RR by door - Drywall/ joint compound	Pink Non-Fibrous Homogeneous	15% Cellulose 5% Glass	80% Non-fibrous (Other)	None Detected
56-Joint Compound *321900561-0056A*	Bath house bldg-womens RR by door - Drywall/ joint compound	White Non-Fibrous Homogeneous		100% Non-fibrous (Other)	None Detected
57-Roofing-1 *321900561-0057*	Spectator shelter-roof NE side - Roof core- grey rolled roofing	Gray/Black Fibrous Heterogeneous	10% Cellulose	70% Non-fibrous (Other)	20% Chrysotile

Report amended: 01/16/2019 17:10:47 Replaces initial report from: 01/16/2019 16:48:00 Reason Code: Data Entry-Change to Location

LA Testing
520 Mission Street South Pasadena, CA 91030
Tel/Fax: (323) 254-9960 / (323) 254-9982
http://www.LATesting.com / pasadenalab@latesting.com

LA Testing Order:	321900561
Customer ID:	32CONV56
Customer PO:	184127301
Project ID:	

Test Report: Asbestos Analysis of Bulk Materials via EPA 600/R-93/116 Method using Polarized Light Microscopy

			Non-Asbestos		Asbestos
Sample	**Description**	**Appearance**	**% Fibrous**	**% Non-Fibrous**	**% Type**
57-Roofing-2 *321900561-0057A*	Spectator shelter-roof NE side - Roof core- grey rolled roofing	Black Fibrous Homogeneous	40% Cellulose	60% Non-fibrous (Other)	None Detected
57-Roofing-3 *321900561-0057B*	Spectator shelter-roof NE side - Roof core- grey rolled roofing	Black Fibrous Homogeneous	40% Cellulose	60% Non-fibrous (Other)	None Detected
57-Roofing-4 *321900561-0057C*	Spectator shelter-roof NE side - Roof core- grey rolled roofing	Black Non-Fibrous Homogeneous	40% Cellulose	60% Non-fibrous (Other)	None Detected
57-Roofing-5 *321900561-0057D*	Spectator shelter-roof NE side - Roof core- grey rolled roofing	Black Fibrous Homogeneous	40% Cellulose	60% Non-fibrous (Other)	None Detected
57-Tar *321900561-0057E*	Spectator shelter-roof NE side - Roof core- grey rolled roofing	Black Non-Fibrous Homogeneous		100% Non-fibrous (Other)	None Detected
58-Roofing-1 *321900561-0058*	Spectator shelter-roof N center - Roof core- grey rolled roofing	Gray/Black Fibrous Heterogeneous	15% Cellulose	70% Non-fibrous (Other)	15% Chrysotile
58-Roofing-2 *321900561-0058A*	Spectator shelter-roof N center - Roof core- grey rolled roofing	Black Fibrous Homogeneous	40% Cellulose	60% Non-fibrous (Other)	None Detected
58-Roofing-3 *321900561-0058B*	Spectator shelter-roof N center - Roof core- grey rolled roofing	Black Fibrous Homogeneous	40% Cellulose	60% Non-fibrous (Other)	None Detected
58-Tar *321900561-0058C*	Spectator shelter-roof N center - Roof core- grey rolled roofing	Black Non-Fibrous Homogeneous		100% Non-fibrous (Other)	None Detected
59-Roofing1 *321900561-0059*	Spectator shelter-roof NE side - Roof core- grey rolled roofing	Gray/Black Fibrous Homogeneous	10% Cellulose	75% Non-fibrous (Other)	15% Chrysotile
59-Roofing 2 *321900561-0059A*	Spectator shelter-roof NE side - Roof core- grey rolled roofing	Black Fibrous Homogeneous	20% Cellulose	80% Non-fibrous (Other)	None Detected
59-Roofing 3 *321900561-0059B*	Spectator shelter-roof NE side - Roof core- grey rolled roofing	Black Fibrous Homogeneous	20% Cellulose	80% Non-fibrous (Other)	None Detected
59-Roofing 4 *321900561-0059C*	Spectator shelter-roof NE side - Roof core- grey rolled roofing	Black Fibrous Homogeneous	20% Cellulose	80% Non-fibrous (Other)	None Detected
60 *321900561-0060*	Spectator shelter-roof NE side - Roof patch mastic	Gray/Black Non-Fibrous Homogeneous		90% Non-fibrous (Other)	10% Chrysotile
61 *321900561-0061*	Spectator shelter-roof NE side - Roof patch mastic	Black Non-Fibrous Homogeneous	10% Cellulose	90% Non-fibrous (Other)	None Detected

Report amended: 01/16/2019 17:10:47 Replaces initial report from: 01/16/2019 16:48:00 Reason Code: Data Entry-Change to Location

LA Testing
520 Mission Street South Pasadena, CA 91030
Tel/Fax: (323) 254-9960 / (323) 254-9982
http://www.LATesting.com / pasadenalab@latesting.com

LA Testing Order:	321900561
Customer ID:	32CONV56
Customer PO:	184127301
Project ID:	

Test Report: Asbestos Analysis of Bulk Materials via EPA 600/R-93/116 Method using Polarized Light Microscopy

			Non-Asbestos		Asbestos
Sample	**Description**	**Appearance**	**% Fibrous**	**% Non-Fibrous**	**% Type**
62 *321900561-0062*	Spectator shelter-roof NW side - Roof patch mastic	Gray/Black Fibrous Homogeneous		95% Non-fibrous (Other)	5% Chrysotile
63 *321900561-0063*	Bath house bldg-mens RR S wall - Ceramic tile grout	White Non-Fibrous Homogeneous		100% Non-fibrous (Other)	None Detected
64 *321900561-0064*	Bath house bldg-mens stall RR shower - Ceramic tile grout	White Non-Fibrous Homogeneous		100% Non-fibrous (Other)	None Detected
65 *321900561-0065*	Bath house bldg-womens stall RR shower - Ceramic tile grout	White/Blue Non-Fibrous Homogeneous		100% Non-fibrous (Other)	None Detected

Analyst(s)

Arturo Casas (46)
Humberto Espinoza (88)

Jerry Drapala Ph.D, Laboratory Manager
or Other Approved Signatory

EMSL maintains liability limited to cost of analysis. The above analyses were performed in general compliance with Appendix E to Subpart E of 40 CFR (previously EPA 600/M4-82-020 "Interim Method"), but augmented with procedures outlined in the 1993 ("final") version of the method. This report relates only to the samples reported above, and may not be reproduced, except in full, without written approval by EMSL. EMSL bears no responsibility for sample collection activities or analytical method limitations. Interpretation and use of test results are the responsibility of the client. All samples received in acceptable condition unless otherwise noted. This report must not be used by the client to claim product certification, approval, or endorsement by NVLAP, NIST or any agency of the federal government. EMSL recommends gravimetric reduction for all non-friable organically bound materials prior to analysis. Estimation of uncertainty is available on request.

Samples analyzed by LA Testing South Pasadena, CA NVLAP Lab Code 200232-0, CA ELAP 2283

Report amended: 01/16/2019 17:10:47 Replaces initial report from: 01/16/2019 16:48:00 Reason Code: Data Entry-Change to Location

OrderID: 321900561

Asbestos Chain of Custody

LA Testing Order Number *(Lab Use Only)*:

#321900561

LA TESTING
520 MISSION STREET
S. PASADENA, CA 91030
PHONE: (323) 254-9960
FAX: (323) 254-9982

Company : Converse Consultants	**LA Testing-Bill to:** ☒ Same ☐ Different If Bill to is Different note instructions in Comments** *Third Party Billing requires written authorization from third party*
Street: 717 S Myrtle Avenue	
City: Monrovia / **State/Province: CA**	**Zip/Postal Code: 91061** / **Country: USA**
Report To (Name): George Paler	**Fax #:**
Telephone #: (626) 807-3416	**Email Address: gpaler@converseconsultants.com**
Project Name/Number: 18-41-273-01 Sparano/Granada Hills Pool	
Please Provide Results: ☐ Fax ☒ Email / **Purchase Order:**	**U.S. State Samples Taken:** CA

Turnaround Time (TAT) Options* – Please Check

☐ 3 Hour ☐ 6 Hour ☐ 24 Hour ☐ 48 Hour ☐ 72 Hour ☐ 96 Hour ☒ 1 Week ☐ 2 Week

**For TEM Air 3 hours through 6 hours, please call ahead to schedule.*There is a premium charge for 3 Hour TEM AHERA or EPA Level II TAT. You will be asked to sign an authorization form for this service. Analysis completed in accordance with LA Testing's Terms and Conditions located in the Analytical Price Guide.*

PCM - Air
- ☐ NIOSH 7400
- ☐ w/ OSHA 8hr. TWA

PLM - Bulk (reporting limit)
- ☒ PLM EPA 600/R-93/116 (<1%)
- ☐ PLM EPA NOB (<1%)

Point Count
- ☐ 400 (<0.25%) ☐ 1000 (<0.1%)

Point Count w/Gravimetric
- ☐ 400 (<0.25%) ☐ 1000 (<0.1%)
- ☐ NYS 198.1 (friable in NY)
- ☐ NYS 198.6 NOB (non-friable-NY)
- ☐ NIOSH 9002 (<1%)

TEM – Air ☐ 4-4.5hr TAT (AHERA only)
- ☐ AHERA 40 CFR, Part 763
- ☐ NIOSH 7402
- ☐ EPA Level II
- ☐ ISO 10312

TEM - Bulk
- ☐ TEM EPA NOB
- ☐ NYS NOB 198.4 (non-friable-NY)
- ☐ Chatfield SOP
- ☐ TEM Mass Analysis-EPA 600 sec. 2.5

TEM – Water: EPA 100.2
- Fibers >10µm ☐ Waste ☐ Drinking
- All Fiber Sizes ☐ Waste ☐ Drinking

TEM- Dust
- ☐ Microvac - ASTM D 5755
- ☐ Wipe - ASTM D6480
- ☐ Carpet Sonication (EPA 600/J-93/167)

Soil/Rock/Vermiculite
- ☐ PLM CARB 435 - A (0.25% sensitivity)
- ☐ PLM CARB 435 - B (0.1% sensitivity)
- ☐ TEM CARB 435 - B (0.1% sensitivity)
- ☐ TEM CARB 435 - C (0.01% sensitivity)
- ☐ EPA Protocol (Semi-Quantitative)
- ☐ EPA Protocol (Quantitative)

Other:
- ☐

☐ **Check For Positive Stop – Clearly Identify Homogenous Group**

Samplers Name: / **Samplers Signature:**

Sample #	Sample Description	Volume/Area (Air) HA # (Bulk)	Date/Time Sampled
01-65	See Attached PO # 1841273Ø1		01/08/18

Client Sample # (s): **Total # of Samples:**

Relinquished (Client): Rodney & Jennifer **Date:** 01/08/19 **Time:** 1630

Received (Lab): UPS OVERNIGHT (UPS) **Date:** 1/8/19 **Time:** 1640

Comments/Special Instructions:

Page 1 of 16 pages

Controlled Document – Asbestos COC – R2 – 1/12/2010

OrderID: 321900561

#321900561

Converse Consultants

717 S. Myrtle Avenue
Monrovia, CA 91016-3422
Tel.: (626) 930-1200
Fax: (626) 930-1212

BULK SAMPLE LOG

Project Name: Sparano/Granada Hills Pool

Collected By: GJP/RDS

Project No.: 18-41-273-01

Date: ~~01~~ 01/08/19
18

HOMOGENEOUS MATERIAL: Roof Core

Sample Number	Location	Area Sq. Ft.	Condition
01	Bath-House Roof, NW	5,800	Good
02	, NE		
03	, East, over office		
04	, Center		
05	, West, over entrance		
06	, SE		
07	, SW		

Friability:	Friable	(Non-Friable)	
Potential for Contact with Material:	High	Moderate	(Low)
Influence of Vibration:	High	Moderate	Low
Potential for Air Erosion:	(High)	Moderate	Low
Damage Assessment:	(Good)	Damaged	Significantly Damaged

COMMENTS: Pitched, Shingle roof

CHAIN OF CUSTODY

Relinquished By: Rael Stanfield	Time: 1630	Date: 01/08/19
Received By:	Time:	Date:
Relinquished By:	Time:	Date:
Received By:	Time:	Date:

OrderID: 321900561

Converse Consultants

#321900561

717 S. Myrtle Avenue
Monrovia, CA 91016-3422
Tel.: (626) 930-1200
Fax: (626) 930-1212

BULK SAMPLE LOG

Project Name: Sparano/Granada Hills Pool Collected By: GJP/RDS

Project No.: 18-41-273-01 Date: 01/08/19

HOMOGENEOUS MATERIAL: Penetration Mastic

Sample Number	Location	Area Sq. Ft.	Condition
08	Bathouse Roof, Southeast	25	Good
09	↓ , West	↓	↓
10	↓ , North	↓	↓

Friability:	Friable	~~Non-Friable~~	
Potential for Contact with Material:	High	Moderate	~~Low~~
Influence of Vibration:	High	Moderate	Low
Potential for Air Erosion:	~~High~~	Moderate	Low
Damage Assessment:	Good	Damaged	Significantly Damaged

COMMENTS: Grey, light & dark (mixed)

CHAIN OF CUSTODY

Relinquished By: Paul Stanfield Time: 1630 Date: 01/08/19
Received By: _____ Time: _____ Date: _____
Relinquished By: _____ Time: _____ Date: _____
Received By: _____ Time: _____ Date: _____

OrderID: 321900561

#321900561

717 S. Myrtle Avenue
Monrovia, CA 91016-3422
Tel.: (626) 930-1200
Fax: (626) 930-1212

Converse Consultants

BULK SAMPLE LOG

Project Name: Sparano/Granada Hills Pool

Collected By: GJP/RDS

Project No.: 18-41-273-01

Date: 01/08/19

HOMOGENEOUS MATERIAL: Pool Skim Coat

Sample Number	Location	Area Sq. Ft.	Condition
11	Pool, Floor, Northwest	9720	Good
12	, Wall, Northwest	↓	↓
13	, Floor, Northeast	↓	↓
14	, Floor, Center	↓	↓
15	, Floor, Southwest	↓	↓
16	, Floor, Southeast	↓	↓
17	↓ , Floor, SE/Center	↓	↓

Friability:	(Friable)	Non-Friable	
Potential for Contact with Material:	(High)	Moderate	Low
Influence of Vibration:	High	Moderate	(Low)
Potential for Air Erosion:	(High)	Moderate	Low
Damage Assessment:	(Good)	Damaged	Significantly Damaged

COMMENTS: Walls and Floor

CHAIN OF CUSTODY

Relinquished By: Paul Stamfield — Time: 1630 — Date: 01/08/19

Received By: _____ — Time: _____ — Date: _____

Relinquished By: _____ — Time: _____ — Date: _____

Received By: _____ — Time: _____ — Date: _____

Page 4 of 16

OrderID: 321900561

Converse Consultants

#321900561

717 S. Myrtle Avenue
Monrovia, CA 91016-3422
Tel.: (626) 930-1200
Fax: (626) 930-1212

BULK SAMPLE LOG

Project Name: Sparano/Granada Hills Pool

Collected By: GJP/RDS

Project No.: 18-41-273-01

Date: 01/08/19

HOMOGENEOUS MATERIAL: concrete

Sample Number	Location	Area Sq. Ft.	Condition
18	Pool Yard, SW corner of Pool	10,000	Good
19	, SW of Pool		
20	, West of Pool		
21	, NW of Pool		
22	, North of Pool		
23	, NE of Pool		
24	, East of Pool		

Friability:	Friable	Non-Friable	
Potential for Contact with Material:	High	Moderate	Low
Influence of Vibration:	High	Moderate	Low
Potential for Air Erosion:	High	Moderate	Low
Damage Assessment:	Good	Damaged	Significantly Damaged

COMMENTS:

CHAIN OF CUSTODY

Relinquished By: Neal Stanfield Time: 1630 Date: 01/08/19
Received By: Time: Date:
Relinquished By: Time: Date:
Received By: Time: Date:

OrderID: 321900561

Converse Consultants #321900561

717 S. Myrtle Avenue
Monrovia, CA 91016-3422
Tel.: (626) 930-1200
Fax: (626) 930-1212

BULK SAMPLE LOG

Project Name: Sparano/Granada Hills Pool Collected By: GJP/RDS

Project No.: 18-41-273-01 Date: 01/08/19

HOMOGENEOUS MATERIAL: Exterior Stucco

Sample Number	Location	Area Sq. Ft.	Condition
25	Bathhouse Exterior, West Wall, North	1,100	Good
26	, West, Entrance	↓	↓
27	, South Wall, West	↓	↓
28	, NE Corner	↓	↓
29	, East Wall, South	↓	↓

Friability:	Friable	Non-Friable	
Potential for Contact with Material:	High	Moderate	Low
Influence of Vibration:	High	Moderate	Low
Potential for Air Erosion:	High	Moderate	Low
Damage Assessment:	Good	Damaged	Significantly Damaged

COMMENTS:

CHAIN OF CUSTODY

Relinquished By: Rod Stanfield Time: 1630 Date: 01/08/19
Received By: Time: Date:
Relinquished By: Time: Date:
Received By: Time: Date:

#321900561

Converse Consultants

717 S. Myrtle Avenue
Monrovia, CA 91016-3422
Tel.: (626) 930-1200
Fax: (626) 930-1212

BULK SAMPLE LOG

Project Name: Sparano/Granada Hills Pool

Collected By: GJP/RDS

Project No.: 18-41-273-01

Date: 01/08/19

HOMOGENEOUS MATERIAL: Window Putty

Sample Number	Location	Area Sq. Ft.	Condition
30	office, Exterior, North	120	Good
31	" , " , East	"	"
32	" , " , South	"	"

Friability:	Friable	Non-Friable	
Potential for Contact with Material:	High	Moderate	Low
Influence of Vibration:	High	Moderate	Low
Potential for Air Erosion:	High	Moderate	Low
Damage Assessment:	Good	Damaged	Significantly Damaged

COMMENTS: Exterior of East office, Bath-House. 39 panes.

CHAIN OF CUSTODY

Relinquished By: Rod Stanfield Time: 1630 Date: 01/08/19
Received By: _____ Time: _____ Date: _____
Relinquished By: _____ Time: _____ Date: _____
Received By: _____ Time: _____ Date: _____

Converse Consultants

#321900561

717 S. Myrtle Avenue
Monrovia, CA 91016-3422
Tel.: (626) 930-1200
Fax: (626) 930-1212

BULK SAMPLE LOG

Project Name: Sparano/Granada Hills Pool Collected By: GJP/RDS

Project No.: 18-41-273-01 Date: 1/8/19

HOMOGENEOUS MATERIAL: Roof Core - Grey Rolled Roofing

Sample Number	Location	Area Sq. Ft.	Condition
33	Pool Equipment Bldg. Roof SE side	~850	Good
34	center		
35	NW side		

Friability:	Friable	(Non-Friable)	
Potential for Contact with Material:	High	Moderate	Low
Influence of Vibration:	High	Moderate	Low
Potential for Air Erosion:	High	Moderate	Low
Damage Assessment:	(Good)	Damaged	Significantly Damaged

COMMENTS: Wood substrate. Grey fibrous layer under black felt at top.

CHAIN OF CUSTODY

Relinquished By: Rod Stanfield Time: 1630 Date: 01/08/19
Received By: _____ Time: _____ Date: _____
Relinquished By: _____ Time: _____ Date: _____
Received By: _____ Time: _____ Date: _____

OrderID: 321900561

#321900561

Converse Consultants

717 S. Myrtle Avenue
Monrovia, CA 91016-3422
Tel.: (626) 930-1200
Fax: (626) 930-1212

BULK SAMPLE LOG

Project Name: Sparano/Granada Hills Pool Collected By: GJP/RDS

Project No.: 18-41-273-01 Date: 1/8/19

HOMOGENEOUS MATERIAL: Black Roof Mastic - Patches

Sample Number	Location	Area Sq. Ft.	Condition
36	Pool Equipment Building Roof W. center	~12	Good
37	SE side		
38	NE side		

Friability:	Friable	(Non-Friable)	
Potential for Contact with Material:	High	Moderate	Low
Influence of Vibration:	High	Moderate	Low
Potential for Air Erosion:	High	Moderate	Low
Damage Assessment:	(Good)	Damaged	Significantly Damaged

COMMENTS: Scattered patches on rolled roofing.

CHAIN OF CUSTODY

Relinquished By: Rod Stanfield Time: 1630 Date: 01/08/19
Received By: _____ Time: _____ Date: _____
Relinquished By: _____ Time: _____ Date: _____
Received By: _____ Time: _____ Date: _____

OrderID: 321900561

#321900561

717 S. Myrtle Avenue
Monrovia, CA 91016-3422
Tel.: (626) 930-1200
Fax: (626) 930-1212

Converse Consultants

BULK SAMPLE LOG

Project Name: Sparano/Granada Hills Pool Collected By: GJP/RDS

Project No.: 18-41-273-01 Date: 1/8/19

HOMOGENEOUS MATERIAL: Grey Roof Mastic

Sample Number	Location	Area Sq. Ft.	Condition
39	Pool Equipment Building Roof N. curb/vent pad corner	~10	Good
40	S. pad corner		
41	SE Roof Pen. Vent		

Friability:	Friable	(Non-Friable)	
Potential for Contact with Material:	High	Moderate	Low
Influence of Vibration:	High	Moderate	Low
Potential for Air Erosion:	High	Moderate	Low
Damage Assessment:	(Good)	Damaged	Significantly Damaged

COMMENTS: At Vent pad corners & roof penetrations

CHAIN OF CUSTODY

Relinquished By: [signature] Time: 1630 Date: 01/08/19
Received By: _____ Time: _____ Date: _____
Relinquished By: _____ Time: _____ Date: _____
Received By: _____ Time: _____ Date: _____

Page 10 of 16

OrderID: 321900561

Converse Consultants #321900561

717 S. Myrtle Avenue
Monrovia, CA 91016-3422
Tel.: (626) 930-1200
Fax: (626) 930-1212

BULK SAMPLE LOG

Project Name: Sparano/Granada Hills Pool Collected By: GJP/RDS

Project No.: 18-41-273-01 Date: 1/8/19

HOMOGENEOUS MATERIAL: Interior Plaster Walls

Sample Number	Location	Area Sq. Ft.	Condition
42	Bath House Bldg. - Utility Rm Women's side, by door	~~~5,000~~ GJP ~3,500	Good
43	Women's Restrm, N. Wall		
44	Women's Shower, S. Wall		
45	Hallway o/s Men's Dressing Rm		
46	Director's Office, S. Wall		
47	Boy's Check Rm, E. Wall		
48	Hall o/s Men's Shower, N. Wall		

Friability:	Friable	(Non-Friable)	
Potential for Contact with Material:	High	Moderate	Low
Influence of Vibration:	High	Moderate	Low
Potential for Air Erosion:	High	Moderate	Low
Damage Assessment:	(Good)	Damaged	Significantly Damaged

COMMENTS: Ceiling is open wood beam. Uninsulated metal pipes running at ceiling level. Uninsulated metal pipes inside wall cavities. No transite pipes observed in walls or on roof.

CHAIN OF CUSTODY

Relinquished By: Rod Seanfield Time: 1630 Date: 01/08/19
Received By: _____ Time: _____ Date: _____
Relinquished By: _____ Time: _____ Date: _____
Received By: _____ Time: _____ Date: _____

OrderID: 321900561

#321900561

Converse Consultants

717 S. Myrtle Avenue
Monrovia, CA 91016-3422
Tel.: (626) 930-1200
Fax: (626) 930-1212

BULK SAMPLE LOG

Project Name: Sparano/Granada Hills Pool Collected By: GJP/RDS

Project No.: 18-41-273-01 Date: 1/8/19

HOMOGENEOUS MATERIAL: Grey Skim Coat & Plaster

Sample Number	Location	Area Sq. Ft.	Condition
49	Bath House Bldg - Women's RR Stalls	~1,200	Good
50	Women's Dressing Rm Stalls SW		
51	Women's Dressing Rm Stalls NE		
52	Women's Dressing Rm Stalls SE		
53	Men's RR Stalls NW		

Friability:	Friable	(Non-Friable)	
Potential for Contact with Material:	High	Moderate	Low
Influence of Vibration:	High	Moderate	Low
Potential for Air Erosion:	High	Moderate	Low
Damage Assessment:	(Good)	Damaged	Significantly Damaged

COMMENTS: Rm Stall walls in Women's Restroom, Women's Dressing Room, 1 Wall - Men's Dressing Room & Men's Restroom

CHAIN OF CUSTODY

Relinquished By: Mel Steansfield Time: 1630 Date: 01/08/19
Received By: _____ Time: _____ Date: _____
Relinquished By: _____ Time: _____ Date: _____
Received By: _____ Time: _____ Date: _____

OrderID: 321900561

Converse Consultants

#321900561

717 S. Myrtle Avenue
Monrovia, CA 91016-3422
Tel.: (626) 930-1200
Fax: (626) 930-1212

BULK SAMPLE LOG

Project Name: Sparano/Granada Hills Pool Collected By: GJP/RDS

Project No.: 18-41-273-01 Date: 1/8/19

HOMOGENEOUS MATERIAL: Drywall/Joint compound

Sample Number	Location	Area Sq. Ft.	Condition
54	Bath House Bldg - Men's RR S. Wall by Door	~250	Good
55	D/S Men's RR Nt Men's Shower	↓	↓
56	Women's RR by Door	↓	↓
	↓		

Friability:	Friable	Non-Friable	
Potential for Contact with Material:	High	Moderate	Low
Influence of Vibration:	High	Moderate	Low
Potential for Air Erosion:	High	Moderate	Low
Damage Assessment:	Good	Damaged	Significantly Damaged

COMMENTS: Only at doorways to Men's & Women's Restrooms

CHAIN OF CUSTODY

Relinquished By: Noel Glenfield	Time: 1630	Date: 01/08/19
Received By:	Time:	Date:
Relinquished By:	Time:	Date:
Received By:	Time:	Date:

#321900561

Converse Consultants

717 S. Myrtle Avenue
Monrovia, CA 91016-3422
Tel.: (626) 930-1200
Fax: (626) 930-1212

BULK SAMPLE LOG

Project Name: Sparano/Granada Hills Pool

Collected By: GJP/RDS

Project No.: 18-41-273-01

Date: 1/8/19

HOMOGENEOUS MATERIAL: Roof Core - Grey Rolled Roofing

Sample Number	Location	Area Sq. Ft.	Condition
57	Spectator Shelter Roof - NE side	~600	Good
58	- N. Cntr		
59	- NE side		

Friability:	Friable	Non-Friable	
Potential for Contact with Material:	High	Moderate	Low
Influence of Vibration:	High	Moderate	Low
Potential for Air Erosion:	High	Moderate	Low
Damage Assessment:	Good	Damaged	Significantly Damaged

COMMENTS: This roof has grey fibrous layer like pool Equipment Bldg

CHAIN OF CUSTODY

Relinquished By: [signature] Time: 1630 Date: 01/08/19
Received By: Time: Date:
Relinquished By: Time: Date:
Received By: Time: Date:

OrderID: 321900561

Converse Consultants

#321900561

717 S. Myrtle Avenue
Monrovia, CA 91016-3422
Tel.: (626) 930-1200
Fax: (626) 930-1212

BULK SAMPLE LOG

Project Name: Sparano/Granada Hills Pool Collected By: GJP/RDS

Project No.: 18-41-273-01 Date: 1/8/19

HOMOGENEOUS MATERIAL: Roof Patch Mastic

Sample Number	Location	Area Sq. Ft.	Condition
60	Spectator Shelter Roof NE side	~15	Good
61	NE side		
62	NW side		

Friability:	Friable	(Non-Friable)	
Potential for Contact with Material:	High	Moderate	Low
Influence of Vibration:	High	Moderate	Low
Potential for Air Erosion:	High	Moderate	Low
Damage Assessment:	(Good)	Damaged	Significantly Damaged

COMMENTS: No penetrations

CHAIN OF CUSTODY

Relinquished By: [signature] Time: 1630 Date: 01/08/19
Received By: _____ Time: _____ Date: _____
Relinquished By: _____ Time: _____ Date: _____
Received By: _____ Time: _____ Date: _____

Page 15 of 16

#321900561

Converse Consultants

717 S. Myrtle Avenue
Monrovia, CA 91016-3422
Tel.: (626) 930-1200
Fax: (626) 930-1212

BULK SAMPLE LOG

Project Name: Sparano/Granada Hills Pool Collected By: GJP/RDS

Project No.: 18-41-273-01 Date: 1/8/19

HOMOGENEOUS MATERIAL: Ceramic Tile Grout

Sample Number	Location	Area Sq. Ft.	Condition
63	Bath House Bldg - Men's RR S. Wall	~200	Good
64	Men's Staff RR Shower	↓	↓
65	Women's Staff RR Shower	↓	↓

Friability:	Friable	(Non-Friable)	
Potential for Contact with Material:	High	Moderate	Low
Influence of Vibration:	High	Moderate	Low
Potential for Air Erosion:	High	Moderate	Low
Damage Assessment:	(Good)	Damaged	Significantly Damaged

COMMENTS: In Men's Restroom Wall by Urinals and Men's and Women's Staff Restroom Showers

CHAIN OF CUSTODY

Relinquished By: Robert Sternfield Time: 1630 Date: 01/08/19
Received By: _____ Time: _____ Date: _____
Relinquished By: _____ Time: _____ Date: _____
Received By: _____ Time: _____ Date: _____

LA Testing

520 Mission Street South Pasadena, CA 91030
Phone/Fax: (323) 254-9960 / (323) 254-9982
http://www.LATesting.com / pasadenalab@latesting.com

LA Testing Order: 321902444
Customer ID: 32CONV56
Customer PO:
Project ID:

Attention: George Paler
Converse Consultants
717 S Myrtle Avenue
Monrovia, CA 91016

Phone: (626) 930-1258
Fax: (626) 930-1212
Received: 01/29/2019 2:12 PM
Analysis Date: 01/31/2019
Collected: 01/08/2019

Project: Re: Order ID Number 321900561/ Project Name: 18-41-273-01 Sparano/ Granada Hills Pool

Test Report: Asbestos Analysis of Bulk Material via EPA 600/R-93/116. Quantitation using the 1,000 Point Count Procedure

			Non-Asbestos		Asbestos
Sample	**Description**	**Appearance**	**% Fibrous**	**% Non-Fibrous**	**% Type**
25 *321902444-0001*	Bathhouse exterior, west wall, north - Exterior stucco	Tan/Beige Non-Fibrous Homogeneous		99.80% Non-fibrous (Other)	**0.2%** **Chrysotile**
26 *321902444-0002*	Bathhouse exterior, west entrance - Exterior stucco	Tan Non-Fibrous Homogeneous		99.70% Non-fibrous (Other)	**0.3%** **Chrysotile**
27 *321902444-0003*	Bathhouse exterior, south wall, west - Exterior stucco	Tan Non-Fibrous Homogeneous		99.51% Non-fibrous (Other)	**0.49%** **Chrysotile**
28 *321902444-0004*	Bathhouse exterior, NE corner - Exterior stucco	Gray/Tan Non-Fibrous Heterogeneous		99.80% Non-fibrous (Other)	**0.2%** **Chrysotile**
29 *321902444-0005*	Bathhouse exterior, east wall south - Exterior stucco	Tan Non-Fibrous Homogeneous		99.61% Non-fibrous (Other)	**0.39%** **Chrysotile**
42-Finish Coat *321902444-0006*	Bath house bldgutility rm women's side, by door - Interior plaster walls	Tan Non-Fibrous Homogeneous		99.50% Non-fibrous (Other)	**0.5%** **Chrysotile**
43-Finish Coat *321902444-0007*	Bath house bldg utility rm women's restroom, N wall - Interior plaster walls	White Non-Fibrous Homogeneous		100.0% Non-fibrous (Other)	**<0.1%** **Chrysotile**
44-Finish Coat *321902444-0008*	Bath house bldg utility rm women's shower, S wall - Interior plaster walls	White Non-Fibrous Homogeneous		99.90% Non-fibrous (Other)	**0.1%** **Chrysotile**
45-Finish Coat *321902444-0009*	Bath house bldg utility rm hallway o/s man's dressing rm - Interior plaster walls	Tan Non-Fibrous Homogeneous		99.70% Non-fibrous (Other)	**0.3%** **Chrysotile**
48-Finish Coat *321902444-0010*	Bath house bldg utility rm hall o/s mens shower, N wall - Interior plaster walls	White Non-Fibrous Homogeneous		100.0% Non-fibrous (Other)	**<0.1%** **Chrysotile**

Some samples may contain asbestos fibers present in dimensions below PLM resolution limits.The limit of detection as stated in the method is 0.1%. EMSL Analytical Inc suggests that samples reported as <0.1% or none detected undergo additional analysis via TEM. The above test report relates only to the items tested. This report may not be reproduced, except in full, without written approval EMSL Analytical Inc. This test report must not be used by the client to claim product endorsement by NVLAP or any agency of the United States Government . EMSL Analytical Inc. bears no responsibility for sample collection activities, analytical method limitations, or the accuracy of results when requested to separate layered samples. EMSL Analytical Inc liability is limited to the cost of sample analysis.The test results contained within this report meet the requirements of NELAC unless otherwise noted. Samples received in good condition unless otherwise noted. Unless requested by the client, building materials manufactured with multiple layers (i.e. linoleum, wallboard, etc.) are reported as a single sample.

Samples analyzed by LA Testing South Pasadena, CA NVLAP Lab Code 200232-0, CA ELAP 2283

Initial report from: 01/31/2019 14:43:13

LA Testing

520 Mission Street South Pasadena, CA 91030
Phone/Fax: (323) 254-9960 / (323) 254-9982
http://www.LATesting.com / pasadenalab@latesting.com

LA Testing Order:	321902444
Customer ID:	32CONV56
Customer PO:	
Project ID:	

Attention:	George Paler Converse Consultants 717 S Myrtle Avenue Monrovia, CA 91016	**Phone:**	(626) 930-1258
		Fax:	(626) 930-1212
		Received:	01/29/2019 2:12 PM
		Analysis Date:	01/31/2019
		Collected:	01/08/2019

Project: Re: Order ID Number 321900561/ Project Name: 18-41-273-01 Sparano/ Granada Hills Pool

Test Report: Asbestos Analysis of Bulk Material via EPA 600/R-93/116. Quantitation using the 1,000 Point Count Procedure

			Non-Asbestos		Asbestos
Sample	**Description**	**Appearance**	**% Fibrous**	**% Non-Fibrous**	**% Type**

Analyst(s)

Kieu-anh Pham Duong (10)

Jerry Drapala Ph.D, Laboratory Manager
or other approved signatory

Some samples may contain asbestos fibers present in dimensions below PLM resolution limits.The limit of detection as stated in the method is 0.1%. EMSL Analytical Inc suggests that samples reported as <0.1% or none detected undergo additional analysis via TEM. The above test report relates only to the items tested. This report may not be reproduced, except in full, without written approval EMSL Analytical Inc. This test report must not be used by the client to claim product endorsement by NVLAP or any agency of the United States Government . EMSL Analytical Inc. bears no responsibility for sample collection activities, analytical method limitations, or the accuracy of results when requested to separate layered samples. EMSL Analytical Inc liability is limited to the cost of sample analysis.The test results contained within this report meet the requirements of NELAC unless otherwise noted. Samples received in good condition unless otherwise noted. Unless requested by the client, building materials manufactured with multiple layers (i.e. linoleum, wallboard, etc.) are reported as a single sample.

Samples analyzed by LA Testing South Pasadena, CA NVLAP Lab Code 200232-0, CA ELAP 2283

Initial report from: 01/31/2019 14:43:13

#321902444

McKissack, Annette

From: George J. Paler <GJPaler@ConverseConsultants.com>
Sent: Tuesday, January 29, 2019 2:12 PM
To: LA Testing Lab - Pasadena
Subject: FW: LA Testing Order No. 321900561
Attachments: SKM_C55819012914040.pdf

I sent this to Art Casas not knowing that he was on vacation. Please proceed with the 1,000-point count analyses as indicated below.

Thanks,

From: George J. Paler
Sent: Tuesday, January 29, 2019 2:08 PM
To: 'Casas, Arturo' <acasas@latesting.com>
Cc: Norman S. Eke <NEke@ConverseConsultants.com>
Subject: LA Testing Order No. 321900561

Art,

We have received authorization from the client. Please proceed with 1,000-point count analyses on the samples highlighted in orange on the attached analytical report. There are 10 samples total. Turnaround time is 48 hours. Call or e-mail me if you have any questions.

Thanks,

George Paler
Project Environmental Scientist
Converse Consultants
Phone: (626) 930-1258
Cell: (626) 807-3416
Fax: (626) 930-1212
gpaler@converseconsultants.com

The information contained in this e-mail message(including attachments) is intended only for the personal and confidential use of the recipient(s) named above. This message (including attachments) may be work product and as such is privileged and confidential. If the reader of this message is not the intended recipient or agent responsible for delivering it to the intended recipient, you are hereby notified that you have received this document in error and that any review, dissemination, distribution, or copying of this message is strictly prohibited. If you have received this communication in error, please notify us immediately by e-mail, and delete the original message.

#321902444

LA Testing
520 Mission Street South Pasadena, CA 91030
Tel/Fax: (323) 254-9960 / (323) 254-9982
http://www.LATesting.com / pasadenalab@latesting.com

LA Testing Order: 321900561
Customer ID: 32CONV56
Customer PO: 184127301
Project ID:

Test Report: Asbestos Analysis of Bulk Materials via EPA 600/R-93/116 Method using Polarized Light Microscopy

Sample	Description	Appearance	Non-Asbestos % Fibrous	Non-Asbestos % Non-Fibrous	Asbestos % Type
20-Concrete 321900561-0020A	Pool yard, west of pool - Concrete	Gray Non-Fibrous Homogeneous		100% Non-fibrous (Other)	None Detected
21 321900561-0021	Pool yard, NW of pool - Concrete	Gray Non-Fibrous Homogeneous		100% Non-fibrous (Other)	None Detected
22 321900561-0022	Pool yard, north of pool - Concrete	Gray Non-Fibrous Homogeneous		100% Non-fibrous (Other)	None Detected
23 321900561-0023	Pool yard, NE of pool - Concrete	Gray Non-Fibrous Homogeneous		100% Non-fibrous (Other)	None Detected
24 321900561-0024	Pool yard, east of pool - Concrete	Gray Non-Fibrous Homogeneous		100% Non-fibrous (Other)	None Detected
25 321900561-0025	Bathhouse exterior, west wall, north - Exterior stucco	Tan Non-Fibrous Homogeneous		100% Non-fibrous (Other)	<1% Chrysotile
26 321900561-0026	Bathhouse exterior, west entrance - Exterior stucco	Tan Non-Fibrous Homogeneous		100% Non-fibrous (Other)	<1% Chrysotile
27 321900561-0027	Bathhouse exterior, south wall, west - Exterior stucco	Tan Non-Fibrous Homogeneous		100% Non-fibrous (Other)	<1% Chrysotile
28 321900561-0028	Bathhouse exterior, NE corner - Exterior stucco	Gray/Tan Non-Fibrous Homogeneous		100% Non-fibrous (Other)	<1% Chrysotile
29 321900561-0029	Bathhouse exterior, east wall south - Exterior stucco	Tan Non-Fibrous Homogeneous		100% Non-fibrous (Other)	<1% Chrysotile
30 321900561-0030	Office exterior, north - Window putty	White/Green Non-Fibrous Homogeneous		100% Non-fibrous (Other)	None Detected
31 321900561-0031	Office exterior, east - Window putty	White/Green Non-Fibrous Homogeneous		100% Non-fibrous (Other)	None Detected
32 321900561-0032	Office exterior, south - Window putty	Tan Non-Fibrous Homogeneous		100% Non-fibrous (Other)	None Detected
33-Roofing-1 321900561-0033	Pool equipment bldg, roof SE side - Roof core- gray rolled roofing	Gray/Black Fibrous Heterogeneous	20% Cellulose	70% Non-fibrous (Other)	10% Chrysotile
33-Roofing-2 321900561-0033A	Pool equipment bldg, roof SE side - Roof core- gray rolled roofing	Black Fibrous Homogeneous	40% Cellulose	60% Non-fibrous (Other)	None Detected
33-Roofing-3 321900561-0033B	Pool equipment bldg, roof SE side - Roof core- gray rolled roofing	Black Fibrous Homogeneous	40% Cellulose	60% Non-fibrous (Other)	None Detected
33-Roofing-4 321900561-0033C	Pool equipment bldg, roof SE side - Roof core- gray rolled roofing	Black Fibrous Homogeneous	40% Cellulose	60% Non-fibrous (Other)	None Detected

Initial report from: 01/16/2019 16:47:44

LA Testing
620 Mission Street South Pasadena, CA 91030
Tel/Fax: (323) 254-9860 / (323) 254-9862
http://www.LATesting.com / pasadenalab@latesting.com

LA Testing Order: 321900561
Customer ID: 32CONV56
Customer PO: 184127301
Project ID:

Test Report: Asbestos Analysis of Bulk Materials via EPA 600/R-93/116 Method using Polarized Light Microscopy

Sample	Description	Appearance	Non-Asbestos % Fibrous	Non-Asbestos % Non-Fibrous	Asbestos % Type
33-Roofing-5 321900561-0033D	Pool equipment bldg, roof SE side - Roof core- grey rolled roofing	Black Fibrous Homogeneous	40% Cellulose	60% Non-fibrous (Other)	None Detected
33-Tar 321900561-0033E	Pool equipment bldg, roof SE side - Roof core- grey rolled roofing	Black Non-Fibrous Homogeneous		100% Non-fibrous (Other)	None Detected
34-Roofing-1 321900561-0034	Pool equipment bldg, roof center - Roof core- grey rolled roofing	Gray/Black Fibrous Heterogeneous	10% Cellulose 10% Glass	70% Non-fibrous (Other)	10% Chrysotile
34-Roofing-2 321900561-0034A	Pool equipment bldg, roof center - Roof core- grey rolled roofing	Black Fibrous Homogeneous	30% Cellulose	70% Non-fibrous (Other)	None Detected
34-Roofing-3 321900561-0034B	Pool equipment bldg, roof center - Roof core- grey rolled roofing	Black Fibrous Homogeneous	30% Cellulose	70% Non-fibrous (Other)	None Detected
34-Tar 321900561-0034C	Pool equipment bldg, roof center - Roof core- grey rolled roofing	Black Non-Fibrous Homogeneous		100% Non-fibrous (Other)	None Detected
35-Roofing 1 321900561-0035	Pool equipment bldg, roof NW side - Roof core- grey rolled roofing	Gray/Black Fibrous Homogeneous	5% Cellulose 10% Glass	70% Non-fibrous (Other)	15% Chrysotile
35-Roofing 2 321900561-0035A	Pool equipment bldg, roof NW side - Roof core- grey rolled roofing	Black Non-Fibrous Homogeneous	70% Cellulose 5% Synthetic	25% Non-fibrous (Other)	None Detected
35-Roofing 3 321900561-0035B	Pool equipment bldg, roof NW side - Roof core- grey rolled roofing	Black Non-Fibrous Homogeneous	70% Cellulose 5% Synthetic	25% Non-fibrous (Other)	None Detected
36 321900561-0036	Pool equipment bldg, roof W center - Black roof mastic- patches	Black Non-Fibrous Homogeneous	5% Cellulose	95% Non-fibrous (Other)	None Detected
37 321900561-0037	Pool equipment bldg, roof SE side - Black roof mastic- patches	Black Non-Fibrous Homogeneous	5% Cellulose	95% Non-fibrous (Other)	None Detected
38 321900561-0038	Pool equipment bldg, roof NE side - Black roof mastic- patches	Black Non-Fibrous Homogeneous		100% Non-fibrous (Other)	None Detected
39 321900561-0039	Pool equipment bldg, roof N center vent pad corner - Grey roof mastic	Gray/Black Non-Fibrous Homogeneous		90% Non-fibrous (Other)	10% Chrysotile
40 321900561-0040	Pool equipment bldg, roof S pad corner - Grey roof mastic	Gray/Black Non-Fibrous Homogeneous		90% Non-fibrous (Other)	10% Chrysotile
41 321900561-0041	Pool equipment bldg, roof SE roof pen vent - Grey roof mastic	Gray/Black Fibrous Homogeneous		90% Non-fibrous (Other)	10% Chrysotile
42-Finish Coat 321900561-0042	Bath house bldg-utility rm women's side, by door - Interior plaster walls	Tan Non-Fibrous Homogeneous		100% Non-fibrous (Other)	<1% Chrysotile

Initial report from: 01/16/2019 16:47:44

#321902444

LA Testing
520 Mission Street South Pasadena, CA 91030
Tel/Fax: (323) 254-9960 / (323) 254-9982
http://www.LATesting.com / pasadenalab@latesting.com

LA Testing Order: 321900561
Customer ID: 32CONV56
Customer PO: 184127301
Project ID:

Test Report: Asbestos Analysis of Bulk Materials via EPA 600/R-93/116 Method using Polarized Light Microscopy

Sample	Description	Appearance	Non-Asbestos % Fibrous	Non-Asbestos % Non-Fibrous	Asbestos % Type
42-Base Coat 321900561-0042A	Bath house bldg-utility rm women's side, by door - interior plaster walls	Gray Non-Fibrous Homogeneous		100% Non-fibrous (Other)	None Detected
43-Finish Coat 321900561-0043	Bath house bldg-utility rm women's restroom, N wall - interior plaster walls	White/Beige Non-Fibrous Homogeneous		100% Non-fibrous (Other)	<1% Chrysotile
43-Base Coat 321900561-0043A	Bath house bldg-utility rm women's restroom, N wall - interior plaster walls	Gray Non-Fibrous Homogeneous		100% Non-fibrous (Other)	None Detected
44-Finish Coat 321900561-0044	Bath house bldg-utility rm women's shower, S wall - interior plaster walls	White/Beige Non-Fibrous Homogeneous		100% Non-fibrous (Other)	<1% Chrysotile
44-Base Coat 321900561-0044A	Bath house bldg-utility rm women's shower, S wall - interior plaster walls	Gray Non-Fibrous Homogeneous		100% Non-fibrous (Other)	None Detected
45-Finish Coat 321900561-0045	Bath house bldg-utility rm hallway o/s men's dressing rm - interior plaster walls	Tan Non-Fibrous Homogeneous		100% Non-fibrous (Other)	<1% Chrysotile
45-Base Coat 321900561-0045A	Bath house bldg-utility rm hallway o/s men's dressing rm - interior plaster walls	Gray Non-Fibrous Homogeneous		100% Non-fibrous (Other)	None Detected
46-Finish Coat 321900561-0046	Bath house bldg-utility rm directors office, S wall - interior plaster walls	Tan Non-Fibrous Homogeneous		100% Non-fibrous (Other)	None Detected
46-Base Coat 321900561-0046A	Bath house bldg-utility rm directors office, S wall - interior plaster walls	Gray Non-Fibrous Homogeneous		100% Non-fibrous (Other)	None Detected
47-Finish Coat 321900561-0047	Bath house bldg-utility rm boys check rm, E wall - interior plaster walls	Tan Non-Fibrous Homogeneous		100% Non-fibrous (Other)	None Detected
47-Base Coat 321900561-0047A	Bath house bldg-utility rm boys check rm, E wall - interior plaster walls	Gray Non-Fibrous Homogeneous		100% Non-fibrous (Other)	None Detected
48-Finish Coat 321900561-0048	Bath house bldg-utility rm hall o/s mens shower, N wall - interior plaster walls	Tan Non-Fibrous Homogeneous		100% Non-fibrous (Other)	<1% Chrysotile
48-Base Coat 321900561-0048A	Bath house bldg-utility rm hall o/s mens shower, N wall - interior plaster walls	Gray Non-Fibrous Homogeneous		100% Non-fibrous (Other)	None Detected
49-Skim Coat 321900561-0049	Bath jhhouse bldg-womens RR stalls - Gray skim coat & plaster	Gray Non-Fibrous Homogeneous		100% Non-fibrous (Other)	None Detected

Initial report from: 01/16/2019 16:47:44

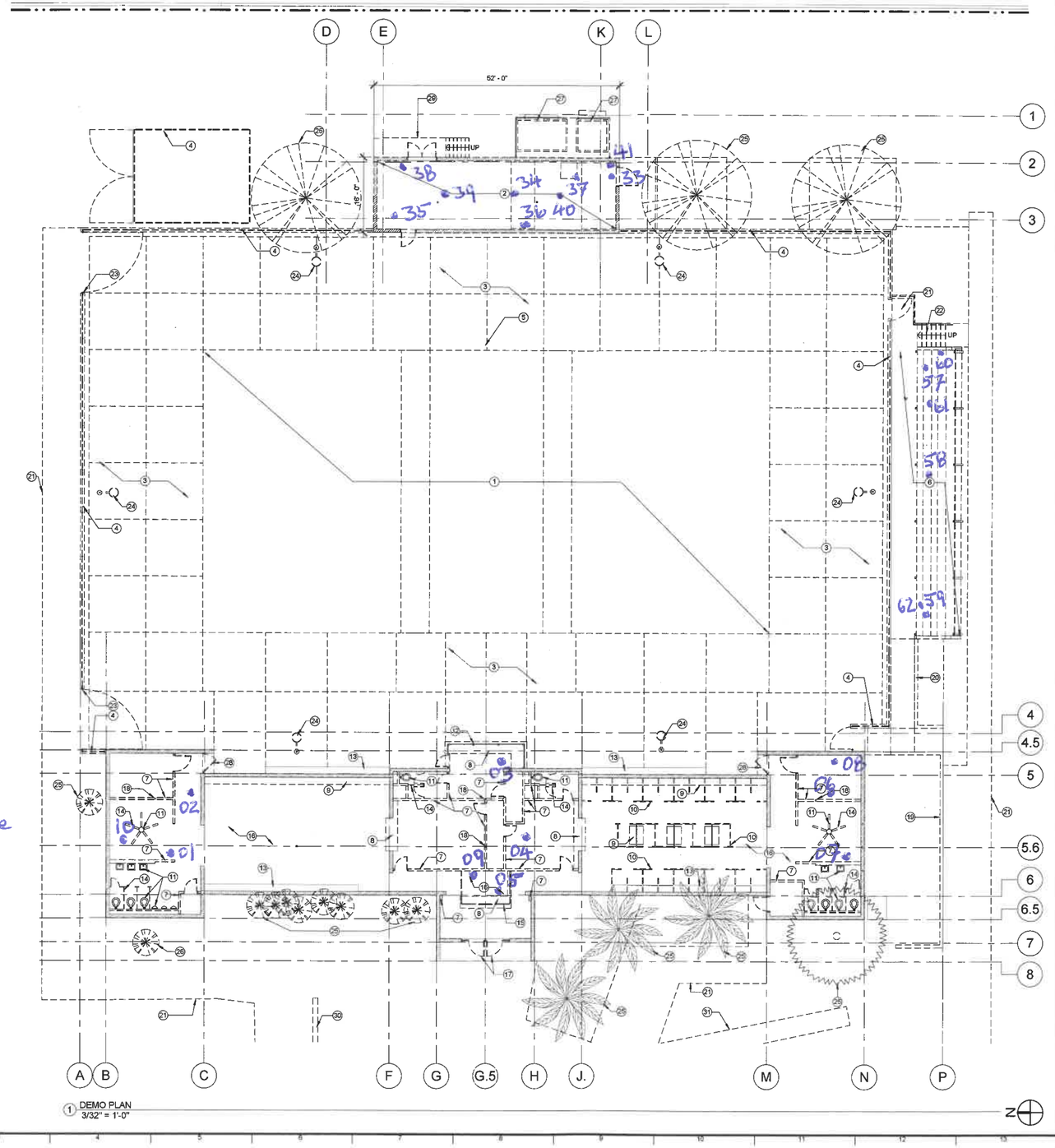

1 DEMO PLAN
3/32" = 1'-0"

GENERAL NOTES

1. THE DEMOLITION SCOPE OF THE PROJECT SHALL BE AS DESCRIBED BELOW, BUT NOT LESS THAN ANY DEMOLITION REQUIRED TO ACHIEVE THE NEW CONSTRUCTION AS ILLUSTRATED IN THESE DOCUMENTS.
2. THE DEMOLITION PLAN AND ITS ASSOCIATE KEYNOTES ARE PROVIDED TO ILLUSTRATE THE SCALE AND SCOPE OF DEMOLITION. CONTRACTOR SHALL VISIT THE SITE PRIOR TO BID TO VERIFY DEMOLITION SCOPE.
3. DEMOLITION INCLUDES REMOVAL OF (E) UTILITY LINES WHERE (N) UTILITY LINES ARE TO BE PROVIDED.
4. DEMOLITION INCLUDES COMPLETE REMOVAL OF POOL EQUIPMENT BUILDING AND ALL ASSOCIATED ELEMENTS.
5. DEMOLITION INCLUDES COMPLETE REMOVAL OF POOL, POOL DECK, PERIMETER CURBS AND RETAINING WALLS, FENCING, LIGHTING, AND ALL ASSOCIATED ELEMENTS.
6. BATHHOUSE PARTIAL DEMOLITION INCLUDES ALL PLASTER ON MTL STUD WALLS, ALL ELECTRICAL ELEMENTS, ALL PLUMBING ELEMENTS, ALL MECHANICAL ELEMENTS, AND ENTIRE CONCRETE FLOOR.
7. BATHHOUSE ROOF DECK AND SHINGLES TO BE REMOVED IN THEIR ENTIRETY. FRAMING MEMBERS TO REMAIN AND SHALL BE PROTECTED.
8. BATHHOUSE MASONRY WALLS (UNO), STEEL COLUMNS AND ASSOCIATED FOOTINGS SHALL REMAIN AND BE PROTECTED.
9. LEAVE REBAR THAT TIES INTO (E) MASONRY WALL AND (E) CONCRETE FOOTING IN PLACE AND PROTECT.
10. SEE LANDSCAPE SHEET L-0.10 FOR ADDITIONAL PROPOSED TREE REMOVAL LOCATIONS.
11. SEE SHEET G0.50 FOR ADDITIONAL SITE HARDSCAPE TO BE DEMOLISHED/ HARDSCAPE TO BE PROTECTED INFO. S.C.D FOR SCOPE AND DETAIL.

GRAPHIC LEGEND

(E) WALL/ELEMENT TO REMAIN

(E) MASONRY WALL TO REMAIN

(E) ELEMENT TO BE DEMOLISHED

NOTE: FOR SMALLER ELEMENTS, DEMOLITION DASHES DO NOT SHOW, REF KEYNOTES FOR CLARIFICATION.

KEYNOTE LEGEND

1 POOL AND ASSOCIATED STRUCTURAL FOUNDATION TO BE DEMOLISHED AND REMOVED IN THEIR ENTIRETY. SEE GEOTECHNICAL REPORT FOR MORE INFO.
2 POOL EQUIPMENT BUILDING AND ASSOCIATED PITS, FOOTINGS, AND FOUNDATION TO BE DEMOLISHED AND REMOVED IN ITS ENTIRETY. SEE GEOTECHNICAL REPORT FOR MORE INFO.
3 POOL DECK AND ASSOCIATED PITS, FOOTINGS, AND FOUNDATION TO BE DEMOLISHED AND REMOVED IN ITS ENTIRETY. SEE GEOTECHNICAL REPORT FOR MORE INFO.
4 CHAINLINK GATE,FENCING, POSTS, CURB, AND ASSOCIATED FOUNDATIONS TO BE DEMOLISHED AND REMOVED IN THEIR ENTIRETY, TYPICAL.
5 POOL DIVING BOARD AND ASSOCIATED FOUNDATIONS TO BE DEMOLISHED AND REMOVED IN THEIR ENTIRETY.
6 SPECTATOR SEATING AND ASSOCIATED FOUNDATION AND SUPER STRUCTURE (ROOF AND FRAMING) TO BE DEMOLISHED AND REMOVED IN ITS ENTIRETY.
7 INTERIOR PLASTER WALLS TO BE DEMOLISHED AND REMOVED IN THEIR ENTIRETY, TYPICAL. REMOVE ALL ASSOCIATED ELEMENTS, I.E. DOORS, ELECTRICAL, ANCHORS, ETC.
8 CONCRETE COUNTER TO BE DEMOLISHED AND REMOVED IN ITS ENTIRETY.
9 CONCRETE BENCH TO BE DEMOLISHED AND REMOVED IN ITS ENTIRETY.
10 CHANGING PARTITIONS TO BE DEMOLISHED AND REMOVED IN ITS ENTIRETY.
11 PLUMBING FIXTURES TO BE DEMOLISHED AND REMOVED IN THEIR ENTIRETY.
12 GLAZING AND SUPPORTING STRUCTURE TO BE DEMOLISHED AND REMOVED IN ITS ENTIRETY. DEMOLISH ROOF BACK TO ADJACENT BRICK WALL AND BEAM.
13 CONCRETE BENCH TO REMAIN AND BE PROTECTED.
14 TOILET/SHOWER PARTITIONS TO BE DEMOLISHED AND REMOVED IN ITS ENTIRETY.
15 METAL SCREEN STRUCTURE TO BE DEMOLISHED AND REMOVED IN ITS ENTIRETY.
16 INTERIOR BUILDING SLAB TO BE DEMOLISHED AND REMOVED IN ITS ENTIRETY. PRESERVE FOUNDATIONS FOR STRUCTURAL ELEMENTS TO REMAIN. REMOVE ASSOCIATED ITEMS I.E. PLUMBING DRAINS, PLUMBING PIPING, ETC.
17 ENTRY DOORS TO BE DEMOLISHED AND REMOVED. ASSOCIATED (E) STEEL FRAME STRUCTURE TO REMAIN, PROTECT.
18 PROTECT (E) STRUCTURAL COLUMN DURING DEMOLITION.
19 CONCRETE RETAINING WALL AND ASSOCIATED FOUNDATIONS TO BE DEMOLISHED AND REMOVED IN THEIR ENTIRETY.
20 CONCRETE RAMP AND ASSOCIATED WALLS, FOUNDATIONS, AND RAILINGS TO BE DEMOLISHED AND REMOVED IN THEIR ENTIRETY.
21 CONCRETE SIDEWALK TO BE DEMOLISHED AND REPLACED. S.C.D. FOR SCOPE AND DETAIL.
22 CONCRETE STAIRS AND ASSOCIATED WALLS, FOUNDATIONS, AND RAILINGS TO BE DEMOLISHED AND REMOVED IN THEIR ENTIRETY.
23 CHAIN LINK GATE, ASSOCIATED POSTS AND FOUNDATIONS TO BE DEMOLISHED AND REMOVED IN THEIR ENTIRETY WITH REMAINDER OF FENCE DEMOLITION.
24 LIGHT POLES AND ASSOCIATED FOOTINGS TO BE DEMOLISHED.
25 PROPOSED TREE REMOVAL PER SHEET L-0.10 PENDING FORESTRY APPROVAL. S.L.D. FOR MORE INFO.
26 (E) TREE TO REMAIN, PROTECT. S.L.D. FOR MORE INFO.
27 CHEMICAL STORAGE TANKS TO BE REMOVED AND ALL ASSOCIATED ELEMENTS (INCLUDING BUT NOT LIMITED TO FOUNDATIONS, SLABS, FENCING, PIPING, AND ELECTRICAL) TO BE DEMOLISHED IN THEIR ENTIRETY.
28 DEMOLISH (E) GATE/DOOR AND ASSOCIATED FOOTING.
29 CONCRETE LOADING DOCK WITH STAIRS AND ASSOCIATED WALLS, FOUNDATIONS, AND RAILINGS TO BE DEMOLISHED AND REMOVED IN THEIR ENTIRETY
30 BIKE RACK TO BE REMOVED AND REPLACED WITH NEW 16 BIKE CAPACITY BIKE RACK.
31 CONCRETE STORM SWELL TO BE DEMOLISHED IN ITS ENTIRETY AND BE REPLACED WITH NEW. S.C.D. AND S.L.C. FOR MORE INFO.

Fig. 1

Sample Location Map - Roofs

THE CITY OF LOS ANGELES OR ITS OFFICERS OR AGENTS SHALL NOT BE RESPONSIBLE FOR THE ACCURACY OR COMPLETENESS OF ELECTRONIC COPIES OF THIS PLAN SHEET.

TTLB TEMPLATE REVISION DATE: 02/2013
SHEET ISSUE DATE: 22 NOV 2017
FILE PATH: BIM 360:/Granada Hills Pool Renovation/A_Granada Hills_2017.rvt

REVISION DATES (DESIGN STAGE ONLY)

BUREAU OF ENGINEERING
CITY OF LOS ANGELES

NO.	REVISION DESCRIPTION	DATE	BY

BUILDING NO. -
INDEX NO.

DEPARTMENT OF PUBLIC WORKS
CITY OF LOS ANGELES

GARY LEE MOORE, PE, ENV SP — CITY ENGINEER

	DATE:
ARCHITECTURAL DIVISION	11/12/18
ARCHITECT/ENGINEER: JOHN SPARANO LIC. NO.: LICENSE	11/12/18
DESIGNED BY: SPARANO + MOONEY ARCHITECTURE	11/12/18
DRAWN BY: PHILIP DIMICK	11/12/18
CHECKED BY: LUDWING JUAREZ	11/12/18
APPROVED BY:	

VERTICAL CONTROL:
HORIZONTAL CONTROL:

SHEET TITLE: DEMOLITION PLAN

PROJECT: GRANADA HILLS POOL AND BATHHOUSE REPLACEMENT PROJECT

ADDRESS: 16730 CHATSWORTH STREET GRANADA HILLS, CA 91344

70% CONSTRUCTION DOCUMENTS
PROJECT ISSUE DATE: 11/12/18

WORK ORDER NO #E170517
PLAN FILE NO.
DRAWING NO. A2.00
SHEET 0 OF SHEETS

PLOTTED:1/2/2019 8:00:16 PM

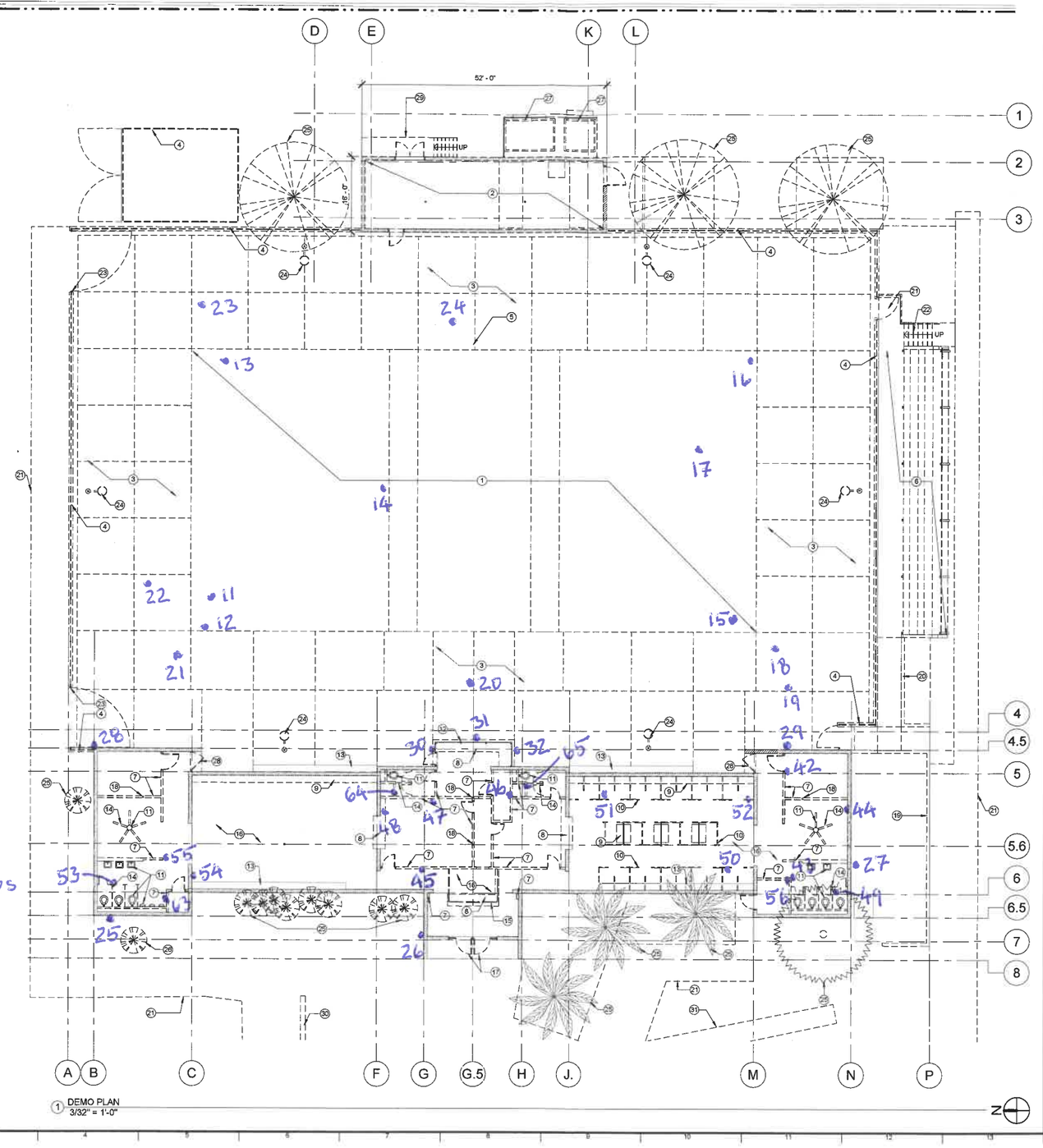

1 DEMO PLAN
3/32" = 1'-0"

GENERAL NOTES

1. THE DEMOLITION SCOPE OF THE PROJECT SHALL BE AS DESCRIBED BELOW, BUT NOT LESS THAN ANY DEMOLITION REQUIRED TO ACHIEVE THE NEW CONSTRUCTION AS ILLUSTRATED IN THESE DOCUMENTS.
2. THE DEMOLITION PLAN AND ITS ASSOCIATE KEYNOTES ARE PROVIDED TO ILLUSTRATE THE SCALE AND SCOPE OF DEMOLITION. CONTRACTOR SHALL VISIT THE SITE PRIOR TO BID TO VERIFY DEMOLITION SCOPE.
3. DEMOLITION INCLUDES REMOVAL OF (E) UTILITY LINES WHERE (N) UTILITY LINES ARE TO BE PROVIDED.
4. DEMOLITION INCLUDES COMPLETE REMOVAL OF POOL EQUIPMENT BUILDING AND ALL ASSOCIATED ELEMENTS.
5. DEMOLITION INCLUDES COMPLETE REMOVAL OF POOL, POOL DECK, PERIMETER CURBS AND RETAINING WALLS, FENCING, LIGHTING, AND ALL ASSOCIATED ELEMENTS.
6. BATHHOUSE PARTIAL DEMOLITION INCLUDES ALL PLASTER ON MTL STUD WALLS, ALL ELECTRICAL ELEMENTS, ALL PLUMBING ELEMENTS, ALL MECHANICAL ELEMENTS, AND ENTIRE CONCRETE FLOOR.
7. BATHHOUSE ROOF DECK AND SHINGLES TO BE REMOVED IN THEIR ENTIRETY. FRAMING MEMBERS TO REMAIN AND SHALL BE PROTECTED.
8. BATHHOUSE MASONRY WALLS (UNO), STEEL COLUMNS AND ASSOCIATED FOOTINGS SHALL REMAIN AND BE PROTECTED.
9. LEAVE REBAR THAT TIES INTO (E) MASONRY WALL AND (E) CONCRETE FOOTING IN PLACE AND PROTECT.
10. SEE LANDSCAPE SHEET L-0.10 FOR ADDITIONAL PROPOSED TREE REMOVAL LOCATIONS
11. SEE SHEET G0.50 FOR ADDITIONAL SITE HARDSCAPE TO BE DEMOLISHED/ HARDSCAPE TO BE PROTECTED INFO. S.C.D FOR SCOPE AND DETAIL.

GRAPHIC LEGEND

(E) WALL/ELEMENT TO REMAIN

(E) MASONRY WALL TO REMAIN

(E) ELEMENT TO BE DEMOLISHED

NOTE: FOR SMALLER ELEMENTS, DEMOLITION DASHES DO NOT SHOW, REF KEYNOTES FOR CLARIFCATION.

KEYNOTE LEGEND

1 POOL AND ASSOCIATED STRUCTURAL FOUNDATION TO BE DEMOLISHED AND REMOVED IN THEIR ENTIRETY. SEE GEOTECHNICAL REPORT FOR MORE INFO.
2 POOL EQUIPMENT BUILDING AND ASSOCIATED PITS, FOOTINGS, AND FOUNDATION TO BE DEMOLISHED AND REMOVED IN ITS ENTIRETY. SEE GEOTECHNICAL REPORT FOR MORE INFO.
3 POOL DECK AND ASSOCIATED PITS, FOOTINGS, AND FOUNDATION TO BE DEMOLISHED AND REMOVED IN ITS ENTIRETY. SEE GEOTECHNICAL REPORT FOR MORE INFO.
4 CHAIN LINK GATE,FENCING, POSTS, CURB, AND ASSOCIATED FOUNDATIONS TO BE DEMOLISHED AND REMOVED IN THEIR ENTIRETY, TYPICAL.
5 POOL DIVING BOARD AND ASSOCIATED FOUNDATIONS TO BE DEMOLISHED AND REMOVED IN THEIR ENTIRETY.
6 SPECTATOR SEATING AND ASSOCIATED FOUNDATION AND SUPER STRUCTURE (ROOF AND FRAMING) TO BE DEMOLISHED AND REMOVED IN ITS ENTIRETY.
7 INTERIOR PLASTER WALLS TO BE DEMOLISHED AND REMOVED IN THEIR ENTIRETY, TYPICAL. REMOVE ALL ASSOCIATED ELEMENTS, I.E. DOORS, ELECTRICAL, ANCHORS, ETC.
8 CONCRETE COUNTER TO BE DEMOLISHED AND REMOVED IN ITS ENTIRETY.
9 CONCRETE BENCH TO BE DEMOLISHED AND REMOVED IN ITS ENTIRETY.
10 CHANGING PARTITIONS TO BE DEMOLISHED AND REMOVED IN ITS ENTIRETY.
11 PLUMBING FIXTURES TO BE DEMOLISHED AND REMOVED IN THEIR ENTIRETY.
12 GLAZING AND SUPPORTING STRUCTURE TO BE DEMOLISHED AND REMOVED IN ITS ENTIRETY. DEMOLISH ROOF BACK TO ADJACENT BRICK WALL AND BEAM.
13 CONCRETE BENCH TO REMAIN AND BE PROTECTED.
14 TOILET/SHOWER PARTITIONS TO BE DEMOLISHED AND REMOVED IN ITS ENTIRETY.
15 METAL SCREEN STRUCTURE TO BE DEMOLISHED AND REMOVED IN ITS ENTIRETY.
16 INTERIOR BUILDING SLAB TO BE DEMOLISHED AND REMOVED IN ITS ENTIRETY. PRESERVE FOUNDATIONS FOR STRUCTURAL ELEMENTS TO REMAIN. REMOVE ASSOCIATED ITEMS I.E. PLUMBING DRAINS, PLUMBING PIPING, ETC.
17 ENTRY DOORS TO BE DEMOLISHED AND REMOVED. ASSOCIATED (E) STEEL FRAME STRUCTURE TO REMAIN, PROTECT.
18 PROTECT (E) STRUCTURAL COLUMN DURING DEMOLITION.
19 CONCRETE RETAINING WALL AND ASSOCIATED FOUNDATIONS TO BE DEMOLISHED AND REMOVED IN THEIR ENTIRETY.
20 CONCRETE RAMP AND ASSOCIATED WALLS, FOUNDATIONS, AND RAILINGS TO BE DEMOLISHED AND REMOVED IN THEIR ENTIRETY.
21 CONCRETE SIDEWALK TO BE DEMOLISHED AND REPLACED. S.C.D. FOR SCOPE AND DETAIL.
22 CONCRETE STAIRS AND ASSOCIATED WALLS, FOUNDATIONS, AND RAILINGS TO BE DEMOLISHED AND REMOVED IN THEIR ENTIRETY.
23 CHAIN LINK GATE, ASSOCIATED POSTS AND FOUNDATIONS TO BE DEMOLISHED AND REMOVED IN THEIR ENTIRETY WITH REMAINDER OF FENCE DEMOLITION.
24 LIGHT POLES AND ASSOCIATED FOOTINGS TO BE DEMOLISHED.
25 PROPOSED TREE REMOVAL PER SHEET L-0.10 PENDING FORESTRY APPROVAL. S.L.D. FOR MORE INFO.
26 (E) TREE TO REMAIN, PROTECT. S.L.D. FOR MORE INFO.
27 CHEMICAL STORAGE TANKS TO BE REMOVED AND ALL ASSOCIATED ELEMENTS (INCLUDING BUT NOT LIMITED TO FOUNDATIONS, SLABS, FENCING, PIPING, AND ELECTRICAL) TO BE DEMOLISHED IN THEIR ENTIRETY.
28 DEMOLISH (E) GATE/DOOR AND ASSOCIATED FOOTING.
29 CONCRETE LOADING DOCK WITH STAIRS AND ASSOCIATED WALLS, FOUNDATIONS, AND RAILINGS TO BE DEMOLISHED AND REMOVED IN THEIR ENTIRETY
30 BIKE RACK TO BE REMOVED AND REPLACED WITH NEW 16 BIKE CAPACITY BIKE RACK.
31 CONCRETE STORM SWELL TO BE DEMOLISHED IN ITS ENTIRETY AND BE REPLACED WITH NEW. S.C.D. AND S.L.C. FOR MORE INFO.

Key
•11
Bulk Asbestos
Sample
Location

Fig. 2

Sample Location Map - Interior/Exterior

THE CITY OF LOS ANGELES OR ITS OFFICERS OR AGENTS SHALL NOT BE RESPONSIBLE FOR THE ACCURACY OR COMPLETENESS OF ELECTRONIC COPIES OF THIS PLAN SHEET.

TTLB TEMPLATE REVISION DATE: 02/2013
SHEET ISSUE DATE: 22 NOV 2017
FILE PATH: BIM 360://Granada Hills Pool Renovation/A_Granada-Hills_2017.rvt

REVISION DATES (DESIGN STAGE ONLY)

BUREAU OF ENGINEERING
CITY OF LOS ANGELES
ENGINEERING

NO.	REVISION DESCRIPTION	DATE	BY:
4			

BUILDING NO. –
INDEX NO.

DEPARTMENT OF PUBLIC WORKS
GARY LEE MOORE, PE, ENV SP — CITY ENGINEER — DATE: 11/12/18
ARCHITECTURAL DIVISION
ARCHITECT/ENGINEER: JOHN SPARANO — LIC. NO.: LICENSE
DESIGNED BY: SPARANO + MOONEY ARCHITECTURE
DRAWN BY: PHILIP DIMICK
CHECKED BY: LUDWING JUAREZ
APPROVED BY:

70% CONSTRUCTION DOCUMENTS
PROJECT ISSUE DATE: 11/12/18
CITY OF LOS ANGELES
VERTICAL CONTROL:
HORIZONTAL CONTROL:

SHEET TITLE: DEMOLITION PLAN
PROJECT: GRANADA HILLS POOL AND BATHHOUSE REPLACEMENT PROJECT
ADDRESS: 16730 CHATSWORTH STREET GRANADA HILLS, CA. 91344

WORK ORDER NO.: #E170517
PLAN FILE NO.:
DRAWING NO.: A2.00
SHEET NO. OF SHEETS

PLOTTED:10/2/2018 8:00:18 PM

Lead-Based Paint

XRF Logs

Appendix C

Copyright 2019 Converse Consultants

Inspector: George Paler
Dates of Inspection: 1/8 - 1/9/2019
CDPH No. I-1487

XRF Summary Table
16730 Ghatsworth St. Granada Hills, CA

Analyzer: Niton XLp702A
Action Lvl: 0.7 mg/cm^2

Reading	Component	Substrate	Side	Condition	Color	Room	Results	PbC	PbC Error
1			SHUTTER_CAL					4.68	0
2			CALIBRATE				Positive	1.6	0.9
3			CALIBRATE				Positive	1.1	0.3
4			CALIBRATE				Positive	1.2	0.4
5			CALIBRATE				Positive	1.2	0.4
6	FENCE	METAL	SOUTH	POOR	GREEN	EXTERIOR	Negative	0.08	0.21
7	FENCE	METAL	EAST	POOR	GREEN	EXTERIOR	Negative	0.13	0.26
8	FENCE	METAL	NORTH	POOR	GREEN	EXTERIOR	Negative	0.16	0.31
9	TRAFFIC PAINT	CONCRETE	SOUTH	FAIR	WHITE	EXTERIOR	Negative	0	0.02
10	TRAFFIC PAINT	CONCRETE	EAST	FAIR	WHITE	EXTERIOR	Negative	0	0.02
11	POOL DECK	CONCRETE	EAST	INTACT	GREY	EXTERIOR	Null	0.01	0.11
12	POOL DECK	CONCRETE	EAST	INTACT	GREY	EXTERIOR	Null	0	0.02
13	POOL DECK	CONCRETE	EAST	INTACT	GREY	EXTERIOR	Negative	0	0.02
14	POOL SIGNS	CONCRETE	EAST	INTACT	WHITE	EXTERIOR	Negative	0.01	0.03
15	POOL SIGNS	CONCRETE	NORTH	INTACT	WHITE	EXTERIOR	Negative	0.01	0.03
16	POOL DECK	CONCRETE	NORTH	INTACT	GREY	EXTERIOR	Negative	0	0.02
17	DIVING PLATFORM WALLS	WOOD	EAST	INTACT	GREY	EXTERIOR	Negative	0	0.02
18	DIVING PLATFORM WALLS	WOOD	EAST	INTACT	GREY	EXTERIOR	Negative	0	0.02
19	POOL INNER WALL	CONCRETE	WEST	INTACT	BLACK	EXTERIOR	Negative	0	0.02
20	POOL INNER WALL	CONCRETE	NORTH	INTACT	BLACK	EXTERIOR	Negative	0	0.02
21	POOL INNER WALL	CONCRETE	EAST	POOR	BLACK	EXTERIOR	Negative	0	0.02
22	POOL INNER WALL TOP	CERAMIC TILE	EAST	INTACT	BLUE	EXTERIOR	Negative	0.03	0.08
23	POOL INNER WALL TOP	CERAMIC TILE	NORTH	INTACT	BLUE	EXTERIOR	Negative	0.02	0.07
24	POOL INNER WALL TOP	CERAMIC TILE	WEST	INTACT	BLUE	EXTERIOR	Negative	0.06	0.19
25	POOL WALL	CONCRETE	WEST	INTACT	WHITE	EXTERIOR	Negative	0.15	0.53
26	POOL WALL	CONCRETE	WEST	INTACT	BLACK	EXTERIOR	Negative	-0.2	0.89
27	POOL WALL	CONCRETE	WEST	INTACT	BLACK	EXTERIOR	Negative	-0.27	0.89
28	POOL WALL	CONCRETE	WEST	INTACT	BLACK	EXTERIOR	Negative	-0.01	0.67
29	POOL WALL	CONCRETE	NORTH	INTACT	WHITE	EXTERIOR	Null	0.5	5.6
30	POOL WALL	CONCRETE	NORTH	INTACT	WHITE	EXTERIOR	Negative	0.01	0.69
31	***POOL WALL***	***CERAMIC TILE***	***NORTH***	***FAIR***	***BLACK***	***EXTERIOR***	***Positive***	***16.9***	***11.6***
32	POOL WALL	CONCRETE	NORTH	FAIR	WHITE	EXTERIOR	Negative	-0.28	0.89

Reading	Component	Substrate	Side	Condition	Color	Room	Results	PbC	PbC Error
33	POOL WALL	CONCRETE	NORTH	FAIR	WHITE	EXTERIOR	Negative	-0.26	0.94
34			CALIBRATE				Positive	1.2	0.4
35			CALIBRATE				Positive	1.2	0.4
36			CALIBRATE				Positive	1.1	0.3
37	POOL WALL	CONCRETE	NORTH	FAIR	WHITE	EXTERIOR	Negative	-0.01	0.67
38	POOL WALL	CONCRETE	NORTH	FAIR	WHITE	EXTERIOR	Negative	-0.33	0.93
39	POOL WALL	CONCRETE	EAST	FAIR	WHITE	EXTERIOR	Negative	0.08	0.58
40	POOL WALL	CONCRETE	EAST	FAIR	BLACK	EXTERIOR	Negative	0.1	0.58
41	***POOL WALL***	***CERAMIC TILE***	***NORTH***	***FAIR***	***BLACK***	***EXTERIOR***	***Positive***	***18***	***12***
42	POOL FLOOR	CONCRETE	NORTH	INTACT	WHITE	EXTERIOR	Negative	-0.27	0.88
43	POOL FLOOR	CONCRETE	NORTH	INTACT	WHITE	EXTERIOR	Negative	0.07	0.63
44	POOL FLOOR	CONCRETE	WEST	INTACT	WHITE	EXTERIOR	Negative	0.04	0.62
45	POOL FLOOR	CONCRETE	WEST	INTACT	BLACK	EXTERIOR	Negative	-0.46	0.93
46	POOL FLOOR	CONCRETE	WEST	INTACT	BLACK	EXTERIOR	Negative	-0.3	0.97
47			CALIBRATE				Positive	1.1	0.4
48			CALIBRATE				Positive	1.1	0.4
49			CALIBRATE				Positive	1.3	0.4
50			SHUTTER_CAL					3.96	0
51			CALIBRATE				Positive	1	0.3
52			CALIBRATE				Positive	1.1	0.4
53			CALIBRATE				Positive	1.1	0.4
54	FLASHING	METAL	WEST	PEELING	WHITE	POOL EQUIPT. BLDG-EXT	Negative	0.02	0.08
55	FLASHING	METAL	WEST	PEELING	WHITE	POOL EQUIPT. BLDG-EXT	Negative	0.01	0.03
56	FASCIA	WOOD	WEST	PEELING	WHITE	POOL EQUIPT. BLDG-EXT	Negative	0.01	0.06
57	ROOF VENT	METAL	NORTH	PEELING	WHITE	POOL EQUIPT. BLDG-EXT	Negative	0.03	0.12
58	ROOF VENT PAD	METAL	NORTH	PEELING	WHITE	POOL EQUIPT. BLDG-EXT	Negative	0.04	0.18
59	ROOF VENT PAD	METAL	SOUTH	PEELING	WHITE	POOL EQUIPT. BLDG-EXT	Negative	0.01	0.04
60	ROOF VENT	METAL	SE	PEELING	WHITE	POOL EQUIPT. BLDG-EXT	Negative	0.06	0.11
61	DOOR	METAL	WEST	FAIR	BLUE	POOL EQUIPT. BLDG-EXT	Negative	0.09	0.26
62	DOOR FRAME	METAL	WEST	FAIR	BLUE	POOL EQUIPT. BLDG-EXT	Negative	0.12	0.25
63	FIRE EXTING. BOX	METAL	WEST	FAIR	BEIGE	POOL EQUIPT. BLDG-EXT	Negative	0.01	0.03
64	DOOR	METAL	WEST	FAIR	BEIGE	POOL EQUIPT. BLDG-INT	Negative	0.03	0.13

Reading	Component	Substrate	Side	Condition	Color	Room	Results	PbC	PbC Error
65	DOOR FRAME	METAL	WEST	PEELING	BEIGE	POOL EQUIPT. BLDG-INT	Negative	0.11	0.31
66	PIPE	METAL	NORTH	PEELING	LT GREEN	POOL EQUIPT. BLDG-INT	Negative	0.05	0.09
67	PIPE	METAL	NORTH	INTACT	GREEN	POOL EQUIPT. BLDG-INT	Negative	0	0.02
68	CEILING	WOOD	NORTH	INTACT	WHITE	POOL EQUIPT. BLDG-INT	Negative	0.05	0.17
69	CEILING BEAM	WOOD	NORTH	INTACT	WHITE	POOL EQUIPT. BLDG-INT	Negative	0.01	0.03
70	CEILING RAFTER	WOOD	NORTH	INTACT	WHITE	POOL EQUIPT. BLDG-INT	Negative	0.02	0.07
71	WINDOW CASE	WOOD	NORTH	FAIR	WHITE	POOL EQUIPT. BLDG-INT	Negative	0	0.02
72	DOOR	METAL	EAST	PEELING	WHITE	POOL EQUIPT. BLDG-INT	Negative	0.01	0.04
73	DOOR FRAME	METAL	EAST	PEELING	BEIGE	POOL EQUIPT. BLDG-INT	Negative	0.06	0.25
74	COLUMN	METAL	CENTER	PEELING	GREY	POOL EQUIPT. BLDG-INT	Negative	0.17	0.38
75	PIPE	METAL	WEST	PEELING	GREY	POOL EQUIPT. BLDG-INT	Negative	0.04	0.13
76	CEILING	WOOD	CENTER	CRACKED	WHITE	POOL EQUIPT. BLDG-INT	Negative	0	0.03
77	CEILING BEAM	WOOD	CENTER	FAIR	WHITE	POOL EQUIPT. BLDG-INT	Negative	0	0.02
78	CEILING RAFTER	WOOD	CENTER	FAIR	WHITE	POOL EQUIPT. BLDG-INT	Negative	0.01	0.03
79	DOOR	METAL	SOUTH	INTACT	BEIGE	POOL EQUIPT. BLDG-INT	Negative	0.02	0.09
80	DOOR FRAME	METAL	SOUTH	INTACT	BEIGE	POOL EQUIPT. BLDG-INT	Negative	0.07	0.22
81	VENT LINE	METAL	SE	FAIR	GRAY	POOL EQUIPT. BLDG-INT	Negative	0.04	0.08
82	PIPE	METAL	SOUTH	INTACT	BLUE	POOL EQUIPT. BLDG-INT	Negative	0	0.02
83	MOTOR	METAL	SOUTH	INTACT	DK GREY	POOL EQUIPT. BLDG-INT	Negative	0	0.02
84	WALL	BRICK	NORTH	INTACT	RED-BROWN	POOL EQUIPT. BLDG-EXT	Negative	0	0.02
85	DOCK	CONCRETE	NE	FAIR	RED-BROWN	POOL EQUIPT. BLDG-EXT	Negative	0	0.02
86	DOCK	CONCRETE	NE	FAIR	RED-BROWN	POOL EQUIPT. BLDG-EXT	Negative	0	0.02
87	DOCK	CONCRETE	NE	FAIR	GREY	POOL EQUIPT. BLDG-EXT	Negative	0	0.02
88	HANDRAIL	METAL	EAST	FAIR	GREY	POOL EQUIPT. BLDG-EXT	Negative	0.23	0.2
89	LOWER WALL	CONCRETE	EAST	PEELING	RED-BROWN	POOL EQUIPT. BLDG-EXT	Negative	0	0.02
90	UPPER WALL	BRICK	EAST	INTACT	RED-BROWN	POOL EQUIPT. BLDG-EXT	Negative	0	0.02
91	DOOR	METAL	EAST	FAIR	RED-BROWN	POOL EQUIPT. BLDG-EXT	Negative	0	0.02
92	DOOR FRAME	METAL	EAST	FAIR	RED-BROWN	POOL EQUIPT. BLDG-EXT	Negative	0.06	0.19
93	FLASHING	METAL	EAST	PEELING	WHITE	POOL EQUIPT. BLDG-EXT	Negative	0.02	0.11
94	FASCIA	WOOD	EAST	PEELING	WHITE	POOL EQUIPT. BLDG-EXT	Null	0	0.05
95	FASCIA	WOOD	EAST	PEELING	WHITE	POOL EQUIPT. BLDG-EXT	Negative	0.01	0.06
96	WALL	BRICK	SOUTH	INTACT	RED-BROWN	POOL EQUIPT. BLDG-EXT	Negative	0	0.02

Reading	Component	Substrate	Side	Condition	Color	Room	Results	PbC	PbC Error
97	DOOR	METAL	SOUTH	INTACT	RED-BROWN	POOL EQUIPT. BLDG-EXT	Negative	0	0.02
98	DOOR FRAME	METAL	SOUTH	INTACT	RED-BROWN	POOL EQUIPT. BLDG-EXT	Negative	-0.33	1
99	DOOR FRAME	METAL	SOUTH	INTACT	RED-BROWN	POOL EQUIPT. BLDG-EXT	Negative	0.04	0.16
100	WINDOW CASE	WOOD	SOUTH	INTACT	WHITE	POOL EQUIPT. BLDG-EXT	Negative	0.03	0.1
101	WINDOW CASE	WOOD	SOUTH	INTACT	WHITE	POOL EQUIPT. BLDG-EXT	Negative	0.01	0.03
102	CEILING BEAM	WOOD	SOUTH	CRACKED	WHITE	POOL EQUIPT. BLDG-EXT	Negative	0.06	0.21
103	FASCIA	WOOD	SOUTH	PEELING	WHITE	POOL EQUIPT. BLDG-EXT	Negative	0	0.02
104	FLASHING	METAL	SOUTH	PEELING	WHITE	POOL EQUIPT. BLDG-EXT	Negative	0.06	0.19
105	POOL DECK LOWER WALL	CONCRETE	SE	PEELING	GRAY	POOL EQUIPT. BLDG-EXT	Negative	0.01	0.03
106	WALL	CONCRETE	SOUTH	FAIR	GRAY	SPECTATOR SHELTER	Negative	0	0.02
107	COLUMN	METAL	SOUTH	INTACT	GRAY	SPECTATOR SHELTER	Negative	0.3	0.39
108	COLUMN	METAL	SOUTH	INTACT	GRAY	SPECTATOR SHELTER	Null	0.02	0.18
109	COLUMN	METAL	SOUTH	INTACT	GRAY	SPECTATOR SHELTER	Negative	0.25	0.45
110	WALL	CONCRETE	EAST	FAIR	GRAY	SPECTATOR SHELTER	Negative	0	0.02
111	HANDRAIL	METAL	EAST	FAIR	GRAY	SPECTATOR SHELTER	Negative	0.29	0.41
112	FLASHING	METAL	EAST	FAIR	WHITE	SPECTATOR SHELTER	Negative	0	0.02
113	FLASHING	METAL	NORTH	FAIR	WHITE	SPECTATOR SHELTER	Negative	0	0.02
114	CEILING	WOOD	NORTH	PEELING	GRAY	SPECTATOR SHELTER	Negative	0.01	0.04
115	CEILING RAFTERS	WOOD	NORTH	PEELING	GRAY	SPECTATOR SHELTER	Negative	0.08	0.27
116	FASCIA	WOOD	NORTH	FAIR	GRAY	SPECTATOR SHELTER	Negative	0.01	0.03
117	SEATING	CONCRETE	NORTH	FAIR	GRAY	SPECTATOR SHELTER	Negative	0.02	0.05
118	COLUMN	METAL	NORTH	FAIR	GRAY	SPECTATOR SHELTER	Negative	0	0.02
119	COLUMN	METAL	NW	FAIR	GRAY	SPECTATOR SHELTER	Negative	0	0.02
120	SEATING	CONCRETE	NW	FAIR	GRAY	SPECTATOR SHELTER	Negative	0	0.02
121	WALL	CONCRETE	NW	FAIR	GRAY	SPECTATOR SHELTER	Negative	0	0.02
122	FLASHING	METAL	NW	FAIR	WHITE	SPECTATOR SHELTER	Negative	0	0.02
123	CEILING	WOOD	NW	PEELING	WHITE	SPECTATOR SHELTER	Negative	0	0.02
124	CEILING RAFTERS	WOOD	NW	PEELING	GRAY	SPECTATOR SHELTER	Negative	0	0.02
125	FASCIA	WOOD	NW	FAIR	GRAY	SPECTATOR SHELTER	Negative	0.03	0.1
126	WALL	STUCCO	NE	INTACT	BEIGE	BATH HOUSE-EXT	Negative	0	0.02
127	FASCIA	WOOD	NE	INTACT	GREEN	BATH HOUSE-EXT	Negative	0	0.02
128	FLASHING	METAL	NE	CRACKED	GREEN	BATH HOUSE-EXT	Negative	0	0.02

XRF Summary Table
16730 Ghatsworth St. Granada Hills, CA

Reading	Component	Substrate	Side	Condition	Color	Room	Results	PbC	PbC Error
129	PORTICO CEILING	WOOD	NE	INTACT	GREEN	BATH HOUSE-EXT	Negative	0	0.02
130	PORTICO RAFTERS	WOOD	NE	INTACT	GREEN	BATH HOUSE-EXT	Negative	0	0.02
131	DOOR	WOOD	NE	INTACT	WHITE	BATH HOUSE-EXT	Negative	0	0.02
132	TRANSOM	WOOD	NE	INTACT	GREEN	BATH HOUSE-EXT	Negative	0	0.02
133	DOOR	METAL	EAST	FAIR	GREEN	BATH HOUSE-EXT	Negative	0	0.02
134	DOOR FRAME	METAL	EAST	FAIR	GREEN	BATH HOUSE-EXT	Negative	0	0.02
135	WINDOW CASE	METAL	EAST	INTACT	GREEN	BATH HOUSE-EXT	Negative	0.5	0.2
136	WINDOW FRAME	METAL	EAST	INTACT	GREEN	BATH HOUSE-EXT	Negative	0.01	0.06
137	WINDOW FRAME	METAL	EAST	INTACT	GREEN	BATH HOUSE-EXT	Negative	0.05	0.15
138	***WINDOW CASE***	***METAL***	***EAST***	***INTACT***	***GREEN***	***BATH HOUSE-EXT***	***Positive***	***0.7***	***0.2***
139	WINDOW CASE	METAL	EAST	INTACT	GREEN	BATH HOUSE-EXT	Negative	0.07	0.21
140	FASCIA	WOOD	EAST	CRACKED	GREEN	BATH HOUSE-EXT	Negative	0	0.02
141	FLASHING	METAL	EAST	CRACKED	GREEN	BATH HOUSE-EXT	Negative	0	0.02
142	PORTICO CEILING	WOOD	EAST	CRACKED	GREEN	BATH HOUSE-EXT	Negative	0	0.02
143	PORTICO RAFTERS	WOOD	EAST	INTACT	GREEN	BATH HOUSE-EXT	Negative	0	0.02
144	***PORTICO FRAME***	***METAL***	***EAST***	***FAIR***	***GREEN***	***BATH HOUSE-EXT***	***Positive***	***0.9***	***0.2***
145	WALL	STUCCO	SE	INTACT	BEIGE	BATH HOUSE-EXT	Negative	0	0.02
146	DOOR	WOOD	SE	INTACT	WHITE	BATH HOUSE-EXT	Negative	0	0.02
147	TRANSOM	WOOD	SE	INTACT	GREEN	BATH HOUSE-EXT	Negative	0	0.02
148	ROOF VENT	METAL	SE	POOR	WHITE	BATH HOUSE-EXT	Null	0.01	0.04
149	ROOF VENT	METAL	SE	POOR	WHITE	BATH HOUSE-EXT	Negative	0.02	0.07
150	ROOF VENT PIPE	METAL	SE	INTACT	SILVER	BATH HOUSE-EXT	Negative	0	0.03
151	ROOF VENT	METAL	EAST	POOR	WHITE	BATH HOUSE-EXT	Negative	0.04	0.12
152	ROOF VENT	METAL	NE	POOR	WHITE	BATH HOUSE-EXT	Negative	0	0.03
153	ROOF VENT PIPE	METAL	NE	FAIR	WHITE	BATH HOUSE-EXT	Negative	0.01	0.05
154	ROOF VENT PIPE	METAL	NE	FAIR	GRAY	BATH HOUSE-EXT	Negative	0	0.03
155	WALL	BRICK	NORTH	INTACT	RED-BROWN	BATH HOUSE-EXT	Negative	0	0.02
156	UPPER WALL	WOOD	NORTH	FAIR	RED-BROWN	BATH HOUSE-EXT	Negative	0	0.02
157	PORTICO CEILING	WOOD	NORTH	FAIR	GREEN	BATH HOUSE-EXT	Negative	0.01	0.03
158	PORTICO RAFTERS	WOOD	NORTH	FAIR	GREEN	BATH HOUSE-EXT	Negative	0.01	0.05
159	PORTICO BEAM	WOOD	NORTH	FAIR	GREEN	BATH HOUSE-EXT	Negative	0	0.02
160	WINDOW FRAME	WOOD	NORTH	PEELING	LT GREEN	BATH HOUSE-EXT	Negative	0.01	0.03

Reading	Component	Substrate	Side	Condition	Color	Room	Results	PbC	PbC Error
161	WALL	STUCCO	NW	INTACT	BEIGE	BATH HOUSE-EXT	Negative	0	0.02
162	WALL	BRICK	WEST	INTACT	RED-BROWN	BATH HOUSE-EXT	Negative	0	0.02
163	ENTRY WALLS	STUCCO	WEST	FAIR	BEIGE	BATH HOUSE-EXT	Negative	0	0.02
164	ENTRY WALLS	BRICK	WEST	INTACT	RED-BROWN	BATH HOUSE-EXT	Negative	0	0.02
165	ENTRY DOORS	METAL	WEST	POOR	GREEN	BATH HOUSE-EXT	Negative	0	0.02
166	ENTRY DOOR FRAME	METAL	WEST	POOR	GREEN	BATH HOUSE-EXT	Negative	0.04	0.04
167	ENTRY FASCIA	WOOD	WEST	FAIR	GREEN	BATH HOUSE-EXT	Negative	0	0.02
168	ENTRY FLASHING	METAL	WEST	FAIR	GREEN	BATH HOUSE-EXT	Negative	0.01	0.03
169	PORTICO CEILING	WOOD	WEST	FAIR	WHITE	BATH HOUSE-EXT	Negative	0.02	0.09
170	PORTICO RAFTERS	WOOD	WEST	FAIR	WHITE	BATH HOUSE-EXT	Negative	0.03	0.1
171	PORTICO BEAM	WOOD	WEST	FAIR	GREEN	BATH HOUSE-EXT	Negative	0	0.02
172	ENTRY WINDOW CASE	WOOD	WEST	FAIR	WHITE	BATH HOUSE-EXT	Negative	0	0.02
173	ENTRY WINDOW CASE	WOOD	WEST	FAIR	WHITE	BATH HOUSE-EXT	Negative	0.12	0.08
174	ENTRY WINDOW FRAME	WOOD	WEST	PEELING	GRAY	BATH HOUSE-EXT	Negative	0.01	0.07
175	PLANTER SEATING	CONCRETE	WEST	FAIR	GRAY	BATH HOUSE-EXT	Negative	0	0.02
176	WALL	BRICK	SW	INTACT	RED-BROWN	BATH HOUSE-EXT	Negative	0	0.02
177	FASCIA	WOOD	SW	FAIR	GREEN	BATH HOUSE-EXT	Negative	0	0.02
178	FLASHING	METAL	SW	FAIR	GREEN	BATH HOUSE-EXT	Negative	0.03	0.09
179	DOOR	METAL	SW	FAIR	GREEN	BATH HOUSE-EXT	Negative	-0.03	0.66
180	DOOR	METAL	SW	FAIR	GREEN	BATH HOUSE-EXT	Negative	0.09	0.6
181	DOOR FRAME	METAL	SW	FAIR	GREEN	BATH HOUSE-EXT	Negative	0.07	0.21
182	WALL	STUCCO	SW	INTACT	BEIGE	BATH HOUSE-EXT	Negative	0	0.02
183	DOOR	METAL	NORTH	INTACT	BEIGE	DIRECTORS OFFICE	Negative	0.02	0.07
184	DOOR FRAME	METAL	NORTH	INTACT	BEIGE	DIRECTORS OFFICE	Negative	0	0.02
185	WINDOW FRAMES	METAL	EAST	FAIR	BEIGE	DIRECTORS OFFICE	Negative	0.11	0.43
186	WINDOW CASE	METAL	EAST	FAIR	BEIGE	DIRECTORS OFFICE	Negative	0.26	0.42
187	CEILING	WOOD	EAST	FAIR	WHITE	DIRECTORS OFFICE	Negative	0.02	0.04
188	CEILING RAFTERS	WOOD	EAST	INTACT	WHITE	DIRECTORS OFFICE	Negative	0.01	0.04
189	CEILING BEAM	WOOD	EAST	INTACT	BEIGE	DIRECTORS OFFICE	Negative	0.01	0.03
190	WALL	PLASTER	WEST	INTACT	BEIGE	DIRECTORS OFFICE	Negative	0	0.02
191	WALL	PLASTER	NORTH	INTACT	BEIGE	DIRECTORS OFFICE	Negative	0	0.02
192	DOOR	METAL	NORTH	INTACT	WHITE	DIRECTORS OFFICE	Negative	0.01	0.03

XRF Summary Table
16730 Ghatsworth St. Granada Hills, CA

Reading	Component	Substrate	Side	Condition	Color	Room	Results	PbC	PbC Error
193	DOOR FRAME	METAL	NORTH	INTACT	WHITE	DIRECTORS OFFICE	Negative	0.08	0.35
194	LOCKER	METAL	WEST	INTACT	TAN	MENS STAFF RR	Negative	0	0.02
195	SINK	CERAMIC	WEST	INTACT	WHITE	MENS STAFF RR	Negative	0.21	0.26
196	STALL	METAL	NORTH	INTACT	BLUE	MENS STAFF RR	Negative	0.06	0.12
197	SHOWER WALLS	CERAMIC TILE	NORTH	INTACT	BLUE	MENS STAFF RR	Negative	0.01	0.06
198	SHOWER WALLS	CERAMIC TILE	NORTH	INTACT	BLUE	MENS STAFF RR	Negative	0.02	0.09
199	SHOWER FLOOR	CERAMIC TILE	NORTH	INTACT	BLUE	MENS STAFF RR	Negative	0	0.02
200	SHOWER CEILING	PLASTER	NORTH	INTACT	BEIGE	MENS STAFF RR	Negative	0	0.02
201	TOILET	CERAMIC	NORTH	INTACT	WHITE	MENS STAFF RR	Negative	0.11	0.24
202	WALL	PLASTER	EAST	INTACT	BEIGE	MENS STAFF RR	Negative	0	0.02
203	***SINK***	***CERAMIC***	***WEST***	***INTACT***	***WHITE***	***DIRECTORS OFFICE***	***Positive***	***33.7***	***30.3***
204	DOOR FRAME	METAL	WEST	FAIR	WHITE	DIRECTORS OFFICE	Negative	0.21	0.48
205	DRAWERS	WOOD	EAST	FAIR	WHITE	DIRECTORS OFFICE	Negative	0	0.02
206	PIPE	METAL	WEST	INTACT	BEIGE	DIRECTORS OFFICE	Negative	0	0.02
207	DOOR	METAL	NORTH	INTACT	WHITE	CLOSET	Negative	0.01	0.03
208	DOOR FRAME	METAL	NORTH	FAIR	WHITE	CLOSET	Negative	0.14	0.54
209	SHELVES	WOOD	SOUTH	INTACT	LT GREEN	CLOSET	Negative	0.01	0.04
210	WALL	PLASTER	SOUTH	INTACT	BEIGE	CLOSET	Negative	0	0.02
211	WALL	PLASTER	SOUTH	INTACT	BEIGE	HALL	Negative	0	0.02
212	ELEC. PANELS	METAL	SOUTH	INTACT	BEIGE	HALL	Negative	0	0.02
213	DOOR	METAL	NORTH	INTACT	BEIGE	HALL	Negative	0	0.02
214	DOOR FRAME	METAL	NORTH	FAIR	BEIGE	HALL	Negative	0.12	0.12
215	RACKS	METAL	CENTER	INTACT	BLUE	MENS CHECK RM	Negative	0.23	0.39
216	SHELVES	WOOD	NORTH	FAIR	WHITE	MENS CHECK RM	Negative	0	0.02
217	CEILING	WOOD		FAIR	WHITE	MENS CHECK RM	Negative	0.01	0.04
218	CEILING BEAM	WOOD		FAIR	WHITE	MENS CHECK RM	Negative	0.02	0.08
219	CEILING RAFTERS	WOOD		FAIR	WHITE	MENS CHECK RM	Negative	0.01	0.04
220	WALL	PLASTER	WEST	FAIR	BEIGE	MENS CHECK RM	Negative	0	0.02
221	DOOR	METAL	WEST	INTACT	BEIGE	MENS CHECK RM	Negative	0.05	0.22
222	DOOR FRAME	METAL	WEST	INTACT	BEIGE	MENS CHECK RM	Negative	0.21	0.43
223	CEILING BEAM BRACKET	METAL		FAIR	WHITE	MENS DRESSING RM	Negative	0.21	0.14
224	CEILING BEAM	WOOD		PEELING	WHITE	MENS DRESSING RM	Negative	0	0.02

Reading	Component	Substrate	Side	Condition	Color	Room	Results	PbC	PbC Error
225	CEILING RAFTERS	WOOD		PEELING	WHITE	MENS DRESSING RM	Negative	0.01	0.06
226	CEILING	WOOD		FAIR	WHITE	MENS DRESSING RM	Negative	0	0.02
227	CONDUIT	METAL		INTACT	WHITE	MENS DRESSING RM	Null	0.04	0.18
228	CONDUIT	METAL		INTACT	WHITE	MENS DRESSING RM	Negative	0.02	0.07
229	PIPE	METAL	EAST	INTACT	WHITE	MENS DRESSING RM	Negative	0	0.02
230	COLUMN	METAL	CENTER	INTACT	WHITE	MENS DRESSING RM	Negative	0.2	0.33
231	STALL	PLASTER	SW	INTACT	GRAY	MENS DRESSING RM	Negative	0	0.02
232	STALL	METAL	SW	INTACT	GRAY	MENS DRESSING RM	Negative	0.17	0.41
233	CEILING	WOOD	WEST	FAIR	WHITE	MENS SHOWER HALL	Negative	0.04	0.14
234	CEILING RAFTERS	WOOD	WEST	FAIR	WHITE	MENS SHOWER HALL	Negative	0.01	0.03
235	CEILING BEAM	WOOD	WEST	FAIR	WHITE	MENS SHOWER HALL	Negative	0.11	0.3
236	CEILING BEAM BRACKET	METAL	WEST	FAIR	WHITE	MENS SHOWER HALL	Negative	0.18	0.25
237	WALL	PLASTER	SOUTH	INTACT	BEIGE	MENS SHOWER HALL	Negative	0	0.02
238	DOOR	METAL	NORTH	FAIR	GRAY	MENS SHOWER HALL	Negative	0.05	0.15
239	DOOR FRAME	METAL	NORTH	FAIR	WHITE	MENS SHOWER HALL	Negative	0.13	0.49
240	DOOR FRAME	METAL	WEST	INTACT	BEIGE	MENS SHOWER HALL	Negative	0.19	0.38
241	DOOR	METAL	WEST	INTACT	OLIVE	MENS SHOWER HALL	Negative	0.04	0.16
242	DOOR	WOOD	NW	INTACT	BLUE	MENS SHOWER HALL	Negative	0	0.02
243	DOOR FRAME	WOOD	NW	INTACT	BLUE	MENS SHOWER HALL	Negative	0	0.02
244	UPPER WALL	DRYWALL	NW	INTACT	BEIGE	MENS SHOWER HALL	Negative	0	0.02
245	LOWER WALL	WOOD	NW	INTACT	BEIGE	MENS SHOWER HALL	Negative	0	0.02
246	WALL	PLASTER	NORTH	INTACT	BEIGE	MENS SHOWER	Negative	0	0.02
247	WALL	DRYWALL	SOUTH	INTACT	GRAY	MENS RESTROOM	Negative	0	0.02
248	UPPER WALL	PLASTER	WEST	INTACT	GRAY	MENS RESTROOM	Negative	0	0.02
249	***LOWER WALL***	***CERAMIC TILE***	***WEST***	***INTACT***	***TAN***	***MENS RESTROOM***	***Positive***	***3.9***	***2.8***
250	FLOOR	CERAMIC TILE	WEST	INTACT	TAN	MENS RESTROOM	Negative	0	0.02
251	***URINALS***	***CERAMIC***	***WEST***	***INTACT***	***WHITE***	***MENS RESTROOM***	***Positive***	***2.8***	***1.6***
252	***TOILETS***	***CERAMIC***	***WEST***	***INTACT***	***WHITE***	***MENS RESTROOM***	***Positive***	***3.2***	***1.8***
253	STALLS	PLASTER	WEST	INTACT	GRAY	MENS RESTROOM	Negative	0	0.02
254	STALLS	METAL	WEST	INTACT	GRAY	MENS RESTROOM	Negative	0.15	0.48
255	STALL DOOR	METAL	WEST	FAIR	BLUE	MENS RESTROOM	Negative	0.05	0.07
256	SINKS	CERAMIC	EAST	INTACT	WHITE	MENS RESTROOM	Negative	0.01	0.06

Reading	Component	Substrate	Side	Condition	Color	Room	Results	PbC	PbC Error
257	SINKS	CERAMIC	EAST	INTACT	WHITE	MENS RESTROOM	Negative	0.01	0.04
258	CABINET	WOOD	CENTER	INTACT	LT GREEN	LOBBY	Negative	0	0.02
259	DOOR	METAL	WEST	INTACT	BEIGE	LOBBY	Negative	0.03	0.1
260	DOOR FRAME	METAL	WEST	INTACT	BEIGE	LOBBY	Negative	0.07	0.17
261	WINDOW CASE	WOOD	WEST	INTACT	BLUE	LOBBY	Negative	0.14	0.26
262	WINDOW FRAME	WOOD	WEST	INTACT	BLUE	LOBBY	Negative	0	0.02
263	DOOR	METAL	WEST	INTACT	BEIGE	WOMENS STAFF RR	Negative	0.01	0.04
264	DOOR FRAME	METAL	WEST	INTACT	BEIGE	WOMENS STAFF RR	Negative	0.08	0.35
265	SINK	CERAMIC	WEST	INTACT	WHITE	WOMENS STAFF RR	Negative	0.02	0.12
266	STALL	METAL	NORTH	INTACT	BLUE	WOMENS STAFF RR	Negative	0.11	0.17
267	SHOWER WALLS	CERAMIC TILE	NORTH	INTACT	BLUE	WOMENS STAFF RR	Negative	0.05	0.21
268	SHOWER FLOOR	CERAMIC TILE	NORTH	INTACT	BLUE	WOMENS STAFF RR	Negative	0	0.02
269	TOILET	CERAMIC	NORTH	INTACT	WHITE	WOMENS STAFF RR	Negative	0.01	0.07
270	CEILING	WOOD	EAST	FAIR	WHITE	WOMENS DRESSING RM	Negative	0	0.02
271	CEILING RAFTERS	WOOD	EAST	FAIR	WHITE	WOMENS DRESSING RM	Negative	0	0.02
272	CEILING BEAMS	WOOD	EAST	FAIR	WHITE	WOMENS DRESSING RM	Negative	0	0.02
273	CEILING BEAMS	WOOD	EAST	FAIR	WHITE	WOMENS DRESSING RM	Negative	0.03	0.13
274	CEILING BEAM BRACKET	METAL	EAST	FAIR	WHITE	WOMENS DRESSING RM	Negative	0.14	0.08
275	CLOTHES RACK	WOOD	EAST	INTACT	DK BROWN	WOMENS DRESSING RM	Negative	0	0.02
276	STALLS	PLASTER	NE	INTACT	GRAY	WOMENS DRESSING RM	Negative	0	0.02
277	STALLS	METAL	NE	INTACT	GRAY	WOMENS DRESSING RM	Negative	0.08	0.24
278	STALLS	PLASTER	SW	INTACT	GRAY	WOMENS DRESSING RM	Negative	0	0.02
279	STALLS	METAL	SW	INTACT	GRAY	WOMENS DRESSING RM	Negative	0.07	0.2
280	CLOTHES RACK	WOOD	SW	INTACT	DK BROWN	WOMENS DRESSING RM	Negative	0	0.02
281	COLUMN	METAL	CENTER	INTACT	WHITE	WOMENS DRESSING RM	Negative	0.19	0.48
282	CABINET	WOOD	EAST	INTACT	LT GREEN	UTILITY RM	Negative	0	0.02
283	***SINK***	***CERAMIC***	***WEST***	***INTACT***	***WHITE***	***UTILITY RM***	***Positive***	***8.8***	***6.5***
284	DOOR	METAL	NORTH	INTACT	OLIVE	UTILITY RM	Negative	0.04	0.08
285	WALL	PLASTER	SOUTH	INTACT	BEIGE	WOMENS SHOWER	Negative	0	0.02
286	WALL	DRYWALL	SW	INTACT	GRAY	WOMENS SHOWER HALL	Negative	0	0.02
287	DOOR	WOOD	SW	INTACT	BLUE	WOMENS SHOWER HALL	Negative	0	0.02
288	DOOR FRAME	WOOD	SW	INTACT	GRAY	WOMENS SHOWER HALL	Negative	0	0.02

XRF Summary Table
16730 Ghatsworth St. Granada Hills, CA

Reading	Component	Substrate	Side	Condition	Color	Room	Results	PbC	PbC Error
289	SINKS	CERAMIC	EAST	INTACT	WHITE	WOMENS SHOWER HALL	Negative	0.02	0.11
290	SINKS	CERAMIC	EAST	INTACT	WHITE	WOMENS SHOWER HALL	Negative	0.01	0.04
291	***TOILETS***	***CERAMIC***	***WEST***	***INTACT***	***WHITE***	***WOMENS SHOWER HALL***	***Positive***	***2.8***	***1.6***
292	STALLS	PLASTER	WEST	INTACT	GRAY	WOMENS SHOWER HALL	Negative	0	0.02
293	STALLS	METAL	WEST	INTACT	GRAY	WOMENS SHOWER HALL	Negative	0.14	0.42
294	STALL DOORS	METAL	WEST	INTACT	BLUE	WOMENS SHOWER HALL	Negative	0.08	0.12
295			CALIBRATE				Positive	1	0.3
296			CALIBRATE				Positive	0.9	0.2
297			CALIBRATE				Positive	1.3	0.4
298			CALIBRATE				Positive	1.1	0.3

Lead-Based Paint

Laboratory Analytical Report
Sample Logs and Chain of Custody
Sample Location Map

Appendix D

Copyright 2019 Converse Consultants

LA Testing
520 Mission Street, South Pasadena, CA 91030
Phone/Fax: (323) 254-9960 / (323) 254-9982
http://www.LATesting.com pasadenalab@latesting.com

LA Testing Order: 321900869
CustomerID: 32CONV56
CustomerPO:
ProjectID:

Attn: **George Paler**
Converse Consultants
717 S Myrtle Avenue
Monrovia, CA 91016

Phone: (626) 930-1200
Fax: (626) 930-1212
Received: 01/09/19 4:05 PM
Collected:

Project: **18-41-273-01 Sparano/ Granda Hills Pool**

Test Report: Lead in Paint Chips by Flame AAS (SW 846 3050B/7000B)*

Client Sample Description	*Lab ID*	*Collected*	*Analyzed*	*Weight*	*Lead Concentration*
L-1	*321900869-0001*		1/14/2019	0.2546 g	<80 ppm
	Site: Pool floor- W side				
L-2	*321900869-0002*		1/14/2019	0.2539 g	<80 ppm
	Site: Pool wall- NE side				
L-3	*321900869-0003*		1/14/2019	0.2583 g	<80 ppm
	Site: Pool wall- west side				
L-4	*321900869-0004*		1/14/2019	0.2551 g	280 ppm
	Site: Pool equipt bldg wood fascia E side				
L-5	*321900869-0005*		1/14/2019	0.2555 g	<80 ppm
	Site: Pool deck wall-E side				
L-6	*321900869-0006*		1/14/2019	0.2533 g	<80 ppm
	Site: Spectator shelter seating N side				
L-7	*321900869-0007*		1/14/2019	0.2521 g	<80 ppm
	Site: Bath house window casing E side				
L-8	*321900869-0008*		1/14/2019	0.2527 g	240 ppm
	Site: Bath house portico frame E side				

Jerry Drapala Ph.D, Laboratory Manager
or other approved signatory

*Analysis following Lead in Paint by EMSL SOP/Determination of Environmental Lead by FLAA. Reporting limit is 0.010 % wt based on the minimum sample weight per our SOP. Unless noted, results in this report are not blank corrected. This report relates only to the samples reported above and may not be reproduced, except in full, without written approval by EMSL. EMSL bears no responsibility for sample collection activities. Samples received in good condition unless otherwise noted. "<" (less than) result signifies that the analyte was not detected at or above the reporting limit. Measurement of uncertainty is available upon request. The QC data associated with the sample results included in this report meet the recovery and precision requirements unless specifically indicated otherwise. Definitions of modifications are available upon request.

Samples analyzed by LA Testing South Pasadena, CA CA ELAP 2283, AIHA-LAP, LLC ELLAP 102814

Initial report from 01/14/2019 16:09:07

OrderID: 321900869

Lead (Pb) Chain of Custody

LA Testing Order Number *(Lab Use Only)*:
#321900869

LA TESTING
520 MISSION STREET
SOUTH PASADENA, CA 91030
PHONE: 800-303-0047
FAX: 323-254-9982

Company : Converse Consultants		**LA Testing-Bill to:** ☐ Same ☐ Different If Bill to is Different note instructions in Comments**	
Street: 717 S Myrtle Avenue		*Third Party Billing requires written authorization from third party*	
City: Monrovia	**State/Province: CA**	**Zip/Postal Code: 91061**	**Country: USA**
Report To (Name): George Paler		**Fax #:**	
Telephone #: (626) 807-3416		**Email Address: gjpaler@converseconsultants.com**	
Project Name/Number: 18-41-273-01 Sparano/Granada Hills Pool			
Please Provide Results: ☐ Fax ☒ Email	**Purchase Order:**	**U.S. State Samples Taken:**	

Turnaround Time (TAT) Options* - Please Check

☐ 3 Hours | ☐ 6 Hours | ☐ 24 Hours | ☐ 48 Hours | ☐ 3 Days | ☐ 4 Days | ☒ 1 Week | ☐ 2 Week

**Analysis completed in accordance with LA Testing's Terms and Conditions located in the Price Guide*

Matrix	Method	Instrument	Reporting Limit	Check
Chips ☐ mg/cm² ☐ % by wt. PPM	SW846-7000B/7420 or AOAC 974.02	Flame Atomic Absorption	0.01%	☒
Air	NIOSH 7082	Flame Atomic Absorption	4 µg/filter	☐
	NIOSH 7105	Graphite Furnace AA	0.03 µg/filter	☐
	NIOSH 7300 modified	ICP-AES	0.5 µg/filter	☐
Wipe* ☐ ASTM ☐ non ASTM *If no box is checked, non-ASTM Wipe is assumed	SW846-7000B/7420	Flame Atomic Absorption	10 µg/wipe	☐
	SW846-6010B or C	ICP-AES	0.5 µg/wipe	☐
TCLP	SW846-1311/7420/SM 3111B	Flame Atomic Absorption	0.4 mg/L (ppm)	☐
	SW846-6010B or C	ICP-AES	0.1 mg/L (ppm)	☐
Soil	SW846-7000B/7420	Flame Atomic Absorption	40 mg/kg (ppm)	☐
	SW846-7421	Graphite Furnace AA	0.3 mg/kg (ppm)	☐
	SW846-6010B or C	ICP-AES	1 mg/kg (ppm)	☐
Wastewater	SM3111B or SW846-7000B/7420	Flame Atomic Absorption	0.4 mg/L (ppm)	☐
	EPA 200.9	Graphite Furnace AA	0.003 mg/L (ppm)	☐
	SW846-6010B or C	ICP-AES	1 mg/kg (ppm)	☐
Drinking Water	EPA 200.9	Graphite Furnace AA	0.003 mg/L (ppm)	☐

Other:	**Preservation Method (Water):**
Name of Sampler:	**Signature of Sampler:**

Sample #	Location	Volume/Area	Date/Time Sampled
	See Attached		

Client Sample #'s L-1 - L-8 **Total # of Samples:** 8

Relinquished (Client): [signature] **Date:** 1/9/19 **Time:** 4:03 pm

Received (Lab): [signature] **Date:** 1/9/19 **Time:** 1605

Comments:

Page 1 of ____ pages

OrderID: 321900869

Converse Consultants

#3219008 69

717 S. Myrtle Avenue
Monrovia, CA 91016-3422
Tel.: (626) 930-1200
Fax: (626) 930-1212

BULK SAMPLE LOG – LEAD PAINT

Project Name: Sparano/Granada Hills Pool

Collected By: GJP

Project No.: 18-41-273-01

Date: 1/9/19

Sample Number	Interior	Exterior	Paint Color & Substrate	Sample Location & Comments	Area Sq. Ft.	Cond.
L-1		✓	White/ concrete	Pool Floor - W. side	~7,200	Intact
L-2		✓	White/ Concrete	Pool Wall - NE side	~1,800	Intact
L-3		✓	Black/ concrete	Pool Wall - west side	~700	Fair
L-4		✓	White/ Wood	Pool Equipt. Bldg Wood Fascia E. side	~136	Peeling
L-5		✓	Gray/ Concrete	Pool Deck Wall - E. side	~174	Peeling
L-6		✓	Gray/ Concrete	Spectator Shelter Seating N. side	~390	Fair
L-7		✓	Green/ Metal	Bath House Window Casing, E. side	~16	Intact
L-8		✓	Green/ Metal	Bath House Portico Frame E. side	~25	Fair

COMMENTS: Spectator Shelter Walls similar to seating Paint

CHAIN OF CUSTODY

Relinquished By: [signature] Time: 4:03pm Date: 1/9/19
Received By: George Pulet Time: Date:
Relinquished By: Time: Date:
Received By: Time: Date:

Page 1 of 1

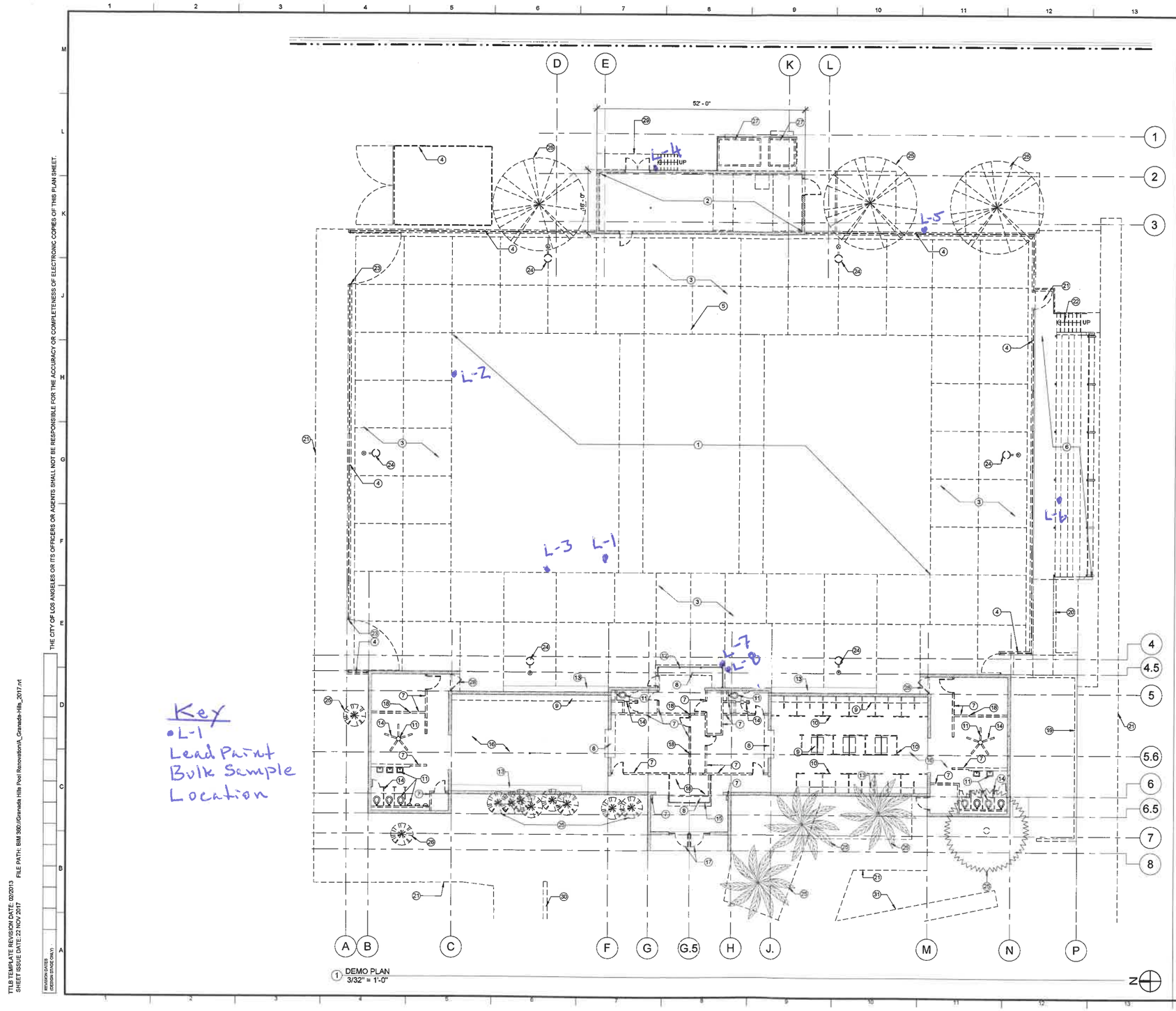

1 DEMO PLAN
3/32" = 1'-0"

GENERAL NOTES

1. THE DEMOLITION SCOPE OF THE PROJECT SHALL BE AS DESCRIBED BELOW, BUT NOT LESS THAN ANY DEMOLITION REQUIRED TO ACHIEVE THE NEW CONSTRUCTION AS ILLUSTRATED IN THESE DOCUMENTS.
2. THE DEMOLITION PLAN AND ITS ASSOCIATE KEYNOTES ARE PROVIDED TO ILLUSTRATE THE SCALE AND SCOPE OF DEMOLITION. CONTRACTOR SHALL VISIT THE SITE PRIOR TO BID TO VERIFY DEMOLITION SCOPE.
3. DEMOLITION INCLUDES REMOVAL OF (E) UTILITY LINES WHERE (N) UTILITY LINES ARE TO BE PROVIDED.
4. DEMOLITION INCLUDES COMPLETE REMOVAL OF POOL EQUIPMENT BUILDING AND ALL ASSOCIATED ELEMENTS.
5. DEMOLITION INCLUDES COMPLETE REMOVAL OF POOL, POOL DECK, PERIMETER CURBS AND RETAINING WALLS, FENCING, LIGHTING, AND ALL ASSOCIATED ELEMENTS.
6. BATHHOUSE PARTIAL DEMOLITION INCLUDES ALL PLASTER ON MTL STUD WALLS, ALL ELECTRICAL ELEMENTS, ALL PLUMBING ELEMENTS, ALL MECHANICAL ELEMENTS, AND ENTIRE CONCRETE FLOOR.
7. BATHHOUSE ROOF DECK AND SHINGLES TO BE REMOVED IN THEIR ENTIRETY. FRAMING MEMBERS TO REMAIN AND SHALL BE PROTECTED.
8. BATHHOUSE MASONRY WALLS (UNO), STEEL COLUMNS AND ASSOCIATED FOOTINGS SHALL REMAIN AND BE PROTECTED.
9. LEAVE REBAR THAT TIES INTO (E) MASONRY WALL AND (E) CONCRETE FOOTING IN PLACE AND PROTECT.
10. SEE LANDSCAPE SHEET L-0.10 FOR ADDITIONAL PROPOSED TREE REMOVAL LOCATIONS
11. SEE SHEET G0.50 FOR ADDITIONAL SITE HARDSCAPE TO BE DEMOLISHED/ HARDSCAPE TO BE PROTECTED INFO. S.C.D FOR SCOPE AND DETAIL.

GRAPHIC LEGEND

(E) WALL/ELEMENT TO REMAIN

(E) MASONRY WALL TO REMAIN

(E) ELEMENT TO BE DEMOLISHED

NOTE: FOR SMALLER ELEMENTS, DEMOLITION DASHES DO NOT SHOW, REF KEYNOTES FOR CLARIFICATION.

KEYNOTE LEGEND

1 POOL AND ASSOCIATED STRUCTURAL FOUNDATION TO BE DEMOLISHED AND REMOVED IN THEIR ENTIRETY. SEE GEOTECHNICAL REPORT FOR MORE INFO.
2 POOL EQUIPMENT BUILDING AND ASSOCIATED PITS, FOOTINGS, AND FOUNDATION TO BE DEMOLISHED AND REMOVED IN ITS ENTIRETY. SEE GEOTECHNICAL REPORT FOR MORE INFO.
3 POOL DECK AND ASSOCIATED PITS, FOOTINGS, AND FOUNDATION TO BE DEMOLISHED AND REMOVED IN ITS ENTIRETY. SEE GEOTECHNICAL REPORT FOR MORE INFO.
4 CHAINLINK GATE,FENCING, POSTS, CURB, AND ASSOCIATED FOUNDATIONS TO BE DEMOLISHED AND REMOVED IN THEIR ENTIRETY, TYPICAL.
5 POOL DIVING BOARD AND ASSOCIATED FOUNDATIONS TO BE DEMOLISHED AND REMOVED IN THEIR ENTIRETY.
6 SPECTATOR SEATING AND ASSOCIATED FOUNDATION AND SUPER STRUCTURE (ROOF AND FRAMING) TO BE DEMOLISHED AND REMOVED IN ITS ENTIRETY.
7 INTERIOR PLASTER WALLS TO BE DEMOLISHED AND REMOVED IN THEIR ENTIRETY, TYPICAL. REMOVE ALL ASSOCIATED ELEMENTS, I.E. DOORS, ELECTRICAL, ANCHORS, ETC.
8 CONCRETE COUNTER TO BE DEMOLISHED AND REMOVED IN ITS ENTIRETY.
9 CONCRETE BENCH TO BE DEMOLISHED AND REMOVED IN ITS ENTIRETY.
10 CHANGING PARTITIONS TO BE DEMOLISHED AND REMOVED IN ITS ENTIRETY.
11 PLUMBING FIXTURES TO BE DEMOLISHED AND REMOVED IN THEIR ENTIRETY.
12 GLAZING AND SUPPORTING STRUCTURE TO BE DEMOLISHED AND REMOVED IN ITS ENTIRETY. DEMOLISH ROOF BACK TO ADJACENT BRICK WALL AND BEAM.
13 CONCRETE BENCH TO REMAIN AND BE PROTECTED.
14 TOILET/SHOWER PARTITIONS TO BE DEMOLISHED AND REMOVED IN ITS ENTIRETY.
15 METAL SCREEN STRUCTURE TO BE DEMOLISHED AND REMOVED IN ITS ENTIRETY.
16 INTERIOR BUILDING SLAB TO BE DEMOLISHED AND REMOVED IN ITS ENTIRETY. PRESERVE FOUNDATIONS FOR STRUCTURAL ELEMENTS TO REMAIN. REMOVE ASSOCIATED ITEMS I.E. PLUMBING DRAINS, PLUMBING PIPING, ETC.
17 ENTRY DOORS TO BE DEMOLISHED AND REMOVED. ASSOCIATED (E) STEEL FRAME STRUCTURE TO REMAIN, PROTECT.
18 PROTECT (E) STRUCTURAL COLUMN DURING DEMOLITION.
19 CONCRETE RETAINING WALL AND ASSOCIATED FOUNDATIONS TO BE DEMOLISHED AND REMOVED IN THEIR ENTIRETY.
20 CONCRETE RAMP AND ASSOCIATED WALLS, FOUNDATIONS, AND RAILINGS TO BE DEMOLISHED AND REMOVED IN THEIR ENTIRETY.
21 CONCRETE SIDEWALK TO BE DEMOLISHED AND REPLACED. S.C.D. FOR SCOPE AND DETAIL.
22 CONCRETE STAIRS AND ASSOCIATED WALLS, FOUNDATIONS, AND RAILINGS TO BE DEMOLISHED AND REMOVED IN THEIR ENTIRETY.
23 CHAIN LINK GATE, ASSOCIATED POSTS AND FOUNDATIONS TO BE DEMOLISHED AND REMOVED IN THEIR ENTIRETY WITH REMAINDER OF FENCE DEMOLITION.
24 LIGHT POLES AND ASSOCIATED FOOTINGS TO BE DEMOLISHED.
25 PROPOSED TREE REMOVAL PER SHEET L-0.10 PENDING FORESTRY APPROVAL. S.L.D. FOR MORE INFO.
26 (E) TREE TO REMAIN, PROTECT. S.L.D. FOR MORE INFO.
27 CHEMICAL STORAGE TANKS TO BE REMOVED AND ALL ASSOCIATED ELEMENTS (INCLUDING BUT NOT LIMITED TO FOUNDATIONS, SLABS, FENCING, PIPING, AND ELECTRICAL) TO BE DEMOLISHED IN THEIR ENTIRETY.
28 DEMOLISH (E) GATE/DOOR AND ASSOCIATED FOOTING.
29 CONCRETE LOADING DOCK WITH STAIRS AND ASSOCIATED WALLS, FOUNDATIONS, AND RAILINGS TO BE DEMOLISHED AND REMOVED IN THEIR ENTIRETY
30 BIKE RACK TO BE REMOVED AND REPLACED WITH NEW 16 BIKE CAPACITY BIKE RACK.
31 CONCRETE STORM SWELL TO BE DEMOLISHED IN ITS ENTIRETY AND BE REPLACED WITH NEW. S.C.D. AND S.L.C. FOR MORE INFO.

Fig. 3

Sample Location Map - Lead Paint

THE CITY OF LOS ANGELES OR ITS OFFICERS OR AGENTS SHALL NOT BE RESPONSIBLE FOR THE ACCURACY OR COMPLETENESS OF ELECTRONIC COPIES OF THIS PLAN SHEET.

TTLB TEMPLATE REVISION DATE: 02/2013
SHEET ISSUE DATE: 22 NOV 2017
FILE PATH: BIM 360://Granada Hills Pool Renovation/A_Granada-Hills_2017.rvt

REVISION DATES (DESIGN STAGE ONLY)

BUREAU OF ENGINEERING
CITY OF LOS ANGELES

NO.	REVISION DESCRIPTION	DATE	BY

BUILDING NO.
INDEX NO.

PUBLIC WORKS

CITY ENGINEER	DATE:
	11/12/18
	11/12/18
	11/12/18
	11/12/18
	11/12/18

DEPARTMENT OF PUBLIC WORKS
GARY LEE MOORE, PE, ENV SP CITY ENGINEER
ARCHITECTURAL DIVISION

ARCHITECT/ENGINEER: JOHN SPARANO LIC. NO. LICENSE
DESIGNED BY: SPARANO + MOONEY ARCHITECTURE
DRAWN BY: PHILIP DIMICK
CHECKED BY: LUDWING JUAREZ
APPROVED BY:

CITY OF LOS ANGELES

VERTICAL CONTROL:
HORIZONTAL CONTROL:

SHEET TITLE: DEMOLITION PLAN

PROJECT: GRANADA HILLS POOL AND BATHHOUSE REPLACEMENT PROJECT
ADDRESS: 16730 CHATSWORTH STREET GRANADA HILLS, CA 91344

70% CONSTRUCTION DOCUMENTS
PROJECT ISSUE DATE: 11/12/18

WORK ORDER NO.
#E170517
PLAN FILE NO.
DRAWING NO.
A2.00
SHEET OF SHEETS

PLOTTED:1/2/2019 8:03:16 PM

4.0 Protection of Trees During Construction

Introduction

The objective of this section is to reduce the negative affects of construction on trees to a less than significant level.

Land development is a complex process and is even more challenging when trees are involved. Construction is one of the greatest causes of tree decline and death in urban areas.

The long-term goal of the Forestry Division is urban forest sustainability. This describes the maintenance of social, recreational, ecological and economic functions of trees and their benefits over time. Stewardship of naturally occurring and planted trees is a central element in forest sustainability. Concerns about tree health and structure, preservation during development and redevelopment, species and site selection, quality of planting stock, standards of performance, maintenance practices in our parks, and recycling are integral to a sustainable urban forest.

Tree protection should not begin subsequent to construction. If preservation measures are delayed or ignored until construction begins, the trees may be destined to fail. Because in most cases construction affects to trees cannot be completely eliminated, the goal for our parks planners and designers is to keep injury to trees to a minimum and allow building projects to proceed at the same time.

Successful tree preservation occurs when designers, construction personnel, and project managers are committed to tree preservation. All members of the project team must be familiar with the rudimentary aspects of tree growth and development in order to understand the relationship between tree survival and construction practices. Myths abound how trees grow.

For example, above ground parts of trees is not a “mirror” of what lies below ground. In actuality, typically four to eleven large roots radiate from the base of a tree’s trunk. These “buttress” roots extend from the root crown and sometimes are visible when the trunk flares away from the root crown or collar. These large roots decrease in taper rapidly and branch repeatedly so that at distances of ten feet or more from the trunk they are about ½ inch in diameter or smaller.

These roots grow horizontally through the soil and depending on the tree can extend 40 feet or more beyond the branch tips. These smaller roots are primarily responsible for water and mineral absorption. There can be hundreds of roots in a cubic inch of soil—thus any removal of soil or root severance forces a tree to compromise its physiological processes to sustain the loss.

All trees cannot and should not be preserved. Trees that are structurally unstable, in poor health, or unable to survive effects of construction become a liability to the project and should be removed. A realistic tree preservation program acknowledges that conflicts between trees and development may sometimes result in the removal of some

trees and recognizes the detrimental effect to the project and community when trees die after construction is completed.

Successful tree preservation occurs when construction impacts to trees are minimized or avoided altogether. The challenge is to determine when impacts will be too severe for the tree to survive, not only in the short term, but also in the long term. There are no quantitative methods to calculate this critical level. Determining the optimum tree protection zone provides a guideline, although trees often survive and flourish with smaller protection areas.

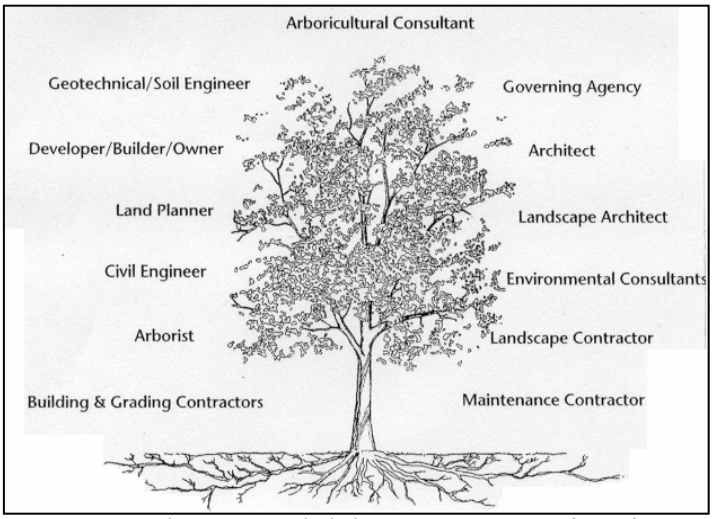

Matheny, N.P. and Clark, J.R. 1998. *Trees and Development*

Tree Preservation during development requires the commitment of everyone involved in the project's planning, design, construction, and management.

The following are the three guiding principles for tree preservation:

- The acknowledgement that not all trees are in excellent health or have good structural stability.

- Tree preservation cannot be the responsibility of the Forestry staff alone. Each development participant must understand that his or her activities and decisions influence the success of tree preservation efforts.

- The ability of an arborist to cure construction injury is very limited, so the focus of preservation efforts is the *prevention* of damage.

Following the above principles will increase the chance for success and reduce the possibility that trees will die.

Efforts at preservation must include acknowledgement of the tree and its ecological support system.

4.10 Planning for All Projects

Capital improvement projects, in-house construction projects, sport field renovations, and even the addition of a few sprinkler lines affect trees. Our department considers trees as important assets and requires plotting tree locations on plans for all projects.

4.10.1 Planning and Designing for Capital Improvement Projects

Projects are designed by in-house design staff and by outside design firms. Either design team should be given set of guidelines defining the Department's *Tree Preservation Policy* (Appendix A) and *Tree Protection Guidelines* (Appendix G and Appendix I), to assure that trees are accounted for from project initiation forward.

A) Survey before Planning

The survey must accurately plot the trunk locations within the project site. Include construction staging areas and delivery routes.

B) Plan and Design with Knowledge of Trees

The health and structural confirmation of the surveyed trees must be evaluated in order to anticipate how well they will respond to development. The evaluation must describe the character of trees and their suitability for preservation at a level of detail appropriate for the project and phase of planning. An arboricultural or forestry consultant must be obtained for this evaluation.

C) Plan with a Vision

Disruption of any tree by construction activities may negatively affect its physiological processes, and cause depletion of energy reserves and decline in vigor, often resulting in tree death. Typically this does not manifest until many years after the tree is disrupted. Preservation of mature trees during construction has limitless benefits to the success of a project.

When new trees are planted, consideration should be given to species diversity and appropriateness of location. To prevent destructive clearance pruning in future years, keep in mind the ultimate canopy and root spread.

D) Plan for all Aspects and Entire Duration of Project

Construction projects are multi-level and often require participation of various construction trades and subcontractors. It is important to plan for tree protection with an understanding of construction dynamics. Trees must be protected in the staging area, construction employee parking area, adjacent properties, as well as on the actual construction site.

4.10.2 Managing In-House Construction Projects

The in-house Construction team should be given set of guidelines that define the Department's *Tree Preservation Policy* (Appendix A) and *Tree Protection Guidelines* (Appendix G and Appendix I), and to assure to assure that trees are accounted for from project initiation forward.

A) Survey before Planning

For all in-house projects, contact the Forestry Division for an accurate survey of trees on the job site.

B) Plan and Design with Knowledge of Trees

In order to better understand the condition of the affected trees, the Forestry Division will make available the results of the tree evaluation. This evaluation will provide you with knowledge of the resources and the anticipated construction tolerance of the affected trees.

C) Plan with a Vision

Obtain information about trees and minimize negative impacts on the urban forest. Conduct all projects with tree preservation in mind.

D) Plan for all Aspects and for the Entire Duration of the Project

Trees must be protected in the staging area, construction employee parking area, and during demolition and grading. Arrange with the Sr. Park Maintenance Supervisor for trees to be watered and for the soil to be protected from compaction.

4.20 Pre-Construction Requirements - Tree protection and Preservation Plan

Prior to the commencement of a development project, the R&P Project Manager, and/or City–Wide Construction Supervisor, and/or Regional Head must be assured that if any activity of the project is within the dripline of *Protected Trees,* a site specific tree protection plan is prepared. The following six steps shall be incorporated as part of the Tree Protection and Preservation Plan:

4.20.1 Site Plan

For all projects, site plans must indicate accurately plotted trunk locations and *the dripline* areas of all trees or group of trees to be preserved within the development area. Additionally, for all *Protected Trees* the plans shall accurately show the trunk diameter, dripline and clearly identified *tree protection zones.* The type of protective fencing shall be specified and indicated with a bold dashed line.

4.20.2 Protective tree fencing for all categories of *Protected Trees*

Fenced enclosures shall be erected around trees to be protected. This will achieve three primary goals, (1) to keep crowns and branching structure clear from contact by equipment, materials, and activities; (2) to preserve roots and soil condition in an intact and non-compacted state and; (3) to identify the *Tree Protection Zone* in which no soil disturbance is permitted and activities are restricted, unless otherwise approved by the DRP Arborist.

All trees to be preserved shall be protected with five to six (5 to 6) foot high chain link fences. Fences are to be mounted on two-inch galvanized iron posts, driven into the ground to a depth of at least two feet and at no more than ten-foot centers. Install a two-foot wide access gate for tree maintenance. Tree fences shall be erected before demolition, grading, or construction begins and remain until final inspection of the

project. The 'Warning" sign shall be prominently displayed on each protective fence. The sign shall be a minimum of 8.5 inches x 11 inches and clearly state the following:

TREE PROTECTION ZONE
This Fence Shall Not be Removed

All work within the *Tree Protection Zone* requires approval of the DRP Arborist.

A) Type I Tree Protection Fence is for trees to be preserved throughout the duration of the project. The fences shall enclose the entire area under the canopy dripline or *Tree Protection Zone,* if specified by the DRP Arborist. If fencing must be located on paving or concrete that will not be demolished, an appropriate grade level concrete base may support the posts.

B) Type II Tree Protection Fence is for trees situated in small planting areas, where only the planting area is enclosed with the required chain link protective fencing. The walkways and traffic areas are left open to the public.

C) Type III Tree Protection Fence is for trees in small tree wells, building site planters or sidewalk planters. Trees shall be wrapped with 2 inches of orange plastic fencing from the ground to the first branch and overlaid with 2-inch thick wooden slats that are bound securely (slats shall not be allowed to dig into the bark). During installation of the plastic fencing, caution shall be used to avoid damaging branches. Major scaffold limbs may also require plastic fencing as directed by the DRP Arborist.

No storage of material, topsoil, vehicles, or equipment shall be permitted within the fenced area throughout the entire duration of the construction project.

4.20.3 Verification of tree protection

The project contractor or construction supervisor shall verify in writing that all pre-construction tree preservation conditions have been met as follows:

A) Tree fencing installed
B) Erosion control secured
C) Tree pruning completed
D) Soil compaction preventive measures installed
E) Tree maintenance schedule established

The Planning and Construction Project Manager, City-wide Construction Supervisor, or Region Head Superintendent and Head of Recreation and Parks Urban Forest must sign this verification.

4.20.4 Pre-construction meeting

The DRP Arborist shall attend all pre-construction meetings to assure that everyone fully understands previously reviewed procedures and tree protective measures concerning the project site, staging areas, hauling routes, watering, contacts, etc.

4.20.5 Tree Protection Zone

Each tree to be retained shall have a designated *Tree Protection Zone* identifying the area sufficiently large enough to protect it and its roots from disturbance. The *Tree Protection Zone* shall be shown on all site plans: Demolition, Grading, Irrigation, Electrical, Landscape, etc. Improvements or activities such as paving, utility and irrigation trenching including other ancillary activities shall occur outside the *Tree Protection Zone,* unless otherwise specified. The protection fence shall serve as the *Tree Protection Zone.*

A) Activities prohibited within the *Tree Protection Zone* include:

- Parking vehicles or equipment, storage of building materials, refuse, or excavated soils, or dumping poisonous material on or around trees and roots. Poisonous materials include, but are not limited to paint, petroleum products, concrete, stucco mix, dirty water or any material that may be harmful to tree health
- The use of tree trunks as a backstop, winch support, anchorage, as a temporary power pole, signpost or other similar function
- Cutting of tree roots by utility trenching, foundation digging, placement of curbs and trenches, or other miscellaneous excavations without prior approval of the DRP Arborist
- Soil disturbance or grade change
- Drainage changes

B) Activities permitted or required within the *Tree Protective Zone* include:

- **Mulch:** During construction, wood chips may be spread within the *Tree Protection Zone* to a four to six inch depth, leaving the trunk clear of mulch. This will aid in inadvertent soil compaction and moisture loss. Mulch shall be 2-inch unpainted, untreated shredded wood or approved material.
- **Root Buffer:** When areas under the tree canopy cannot be fenced, a temporary buffer is required and shall cover the root zone and remain in place at the specified thickness until the final grading stage. The protective buffer shall consist of shredded wood chips spread over the roots at a minimum of 6-inches in depth (keeping the trunk clear of chips), and layered by ¾-inch quarry gravel to stabilize the 3/4–inch plywood sheets laid on top. Steel plates can also be used.
- **Irrigation, Aeration, fertilization, Mycorrhizae** treatments or other beneficial practices that have been specifically approved for use within the *Tree Protection Zone.*

C) Erosion Control:
If a tree is adjacent to or in the immediate proximity to a grade slope of 8% (23 degrees) or more, approved erosion control or silt barriers shall be installed outside the Tree Protection Zone to prevent siltation and/or erosion within the zone.

4.20.6 Tree Pruning and Removal
Prior to construction, various trees may need to be pruned away from structures or proposed construction activity. ***Construction or contractor personnel shall not attempt pruning.*** Only personnel approved by the DRP Arborist can perform pruning operations.

Removal of trees adjacent to trees that are to remain requires a great amount of finesse. Only personnel approved by the DRP Arborist shall engage in tree removal. Removal of trees that extend into branches or roots of protected trees shall not be attempted by the demolition or construction crew, or by grading or other heavy equipment. Before removing tree stumps, the project manager shall determine if roots are entangled with trees that are to remain. If so, these stumps shall have their roots severed before extracting them.

4.30 Activities During Construction and Demolition Near Trees
Soil disturbance or other damaging activities within the Tree Protection Zone is prohibited unless approved by the DRP Arborist and mitigation for specific injuries is implemented. **No encroachment within 10 feet of a trunk will be permitted under any circumstances.**

4.30.1 Soil Compaction
Soil compaction is the largest single factor responsible for the decline of trees on construction sites. The degree of compaction depends on several factors: amount and type of pressure applied, presence and depth of surface organic litter, soil texture and structure, and soil moisture level.

The greatest increase in soil density occurs during the first few equipment passes over the soil, which underscores the importance of implementing protective measures before the project begins and equipment arrives at the site. To dispense traffic weight mulch and temporarily root buffers can be used.

The following techniques can lessen compaction: vertical mulching, soil fracturing, core venting, and radial trenching. Do not compact soil to higher density then needed: to 95% Proctor density (moisture – density) in improved areas for asphalt or concrete pavements, and not to exceed 85% in unimproved open landscape areas that use water jet compaction.

4.30.2 Grading Limitations within the Tree Protection Zone
Lowering the grade around trees can have an immediate and long-term effect on trees. Typically, most roots are within the top 3 feet of soil, and most of the fine roots active in water and nutrient absorption are in the top 12 inches.

A) Grade changes within the *Tree Protection Zone* are not permitted.

B) Grade changes outside the *Tree Protection Zone* shall not significantly alter drainage.

C) Grade changes under specifically approved circumstances shall not allow more than 6 inches of fill soil or allow more than 4 inches of existing soil to be removed from natural grade, unless mitigated.

D) Grade fills over 6 inches or impervious overlay shall incorporate an approved permanent aeration system, permeable material, or other approved mitigation.

E) Grade cuts exceeding 4 inches shall incorporate retaining walls or an appropriate transition equivalent.

The pictures on the next pages illustrate the pattern of tree root development and areas where encroachments may have an adverse effect on tree health. See Training Leaflets (Appendix P) for a list of information offered by the Forestry Division. The video, Guide for Excavating Near Trees, *Tunneling and Trenching* (International Society of Arboriculture) can be borrowed from the Forestry Office.

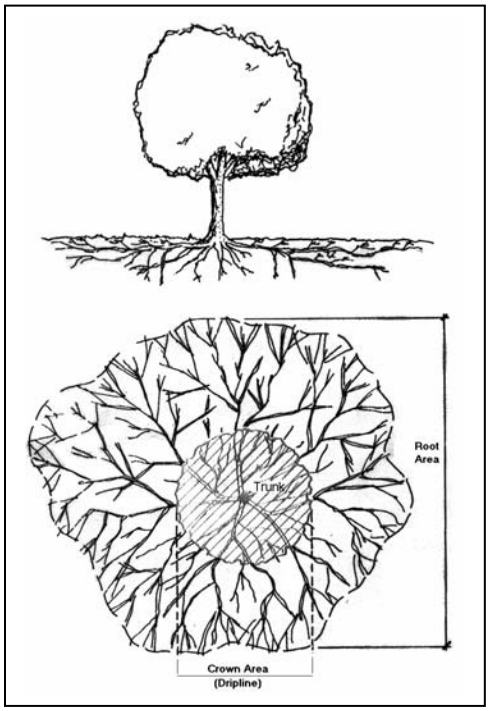

Matheny, N.P. and Clark, J.R. 1998. *Trees and Development*

Tree root system of a tree can be described as shallow and widespread, extending far beyond the edge of the canopy.

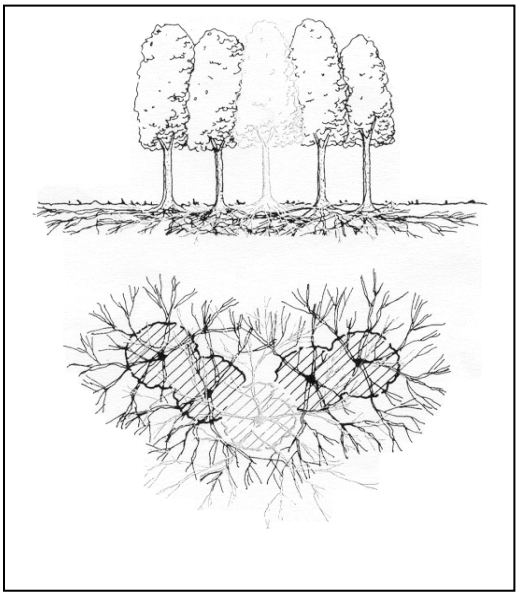

Matheny, N.P. and Clark, J.R. 1998. *Trees and Development*

In many parks where trees grow closely together, root systems of individual trees overlap and intertwine, forming a dense mat of roots.

4.30.3 Trenching, Excavation and Equipment Use

Trenching, excavation or boring within the *Tree Protection Zone* shall be limited to activities approved by the DRP Arborist. Explore alternatives for trenching outside the root zone. Avoid exposing roots during hot, dry weather. Backfill trenches as soon as possible with soil and soak with water the same day. Small roots can die in 10 to 15 minutes and large roots may not survive an hour of exposure. If the trench must be left open all roots must be kept moist by wrapping them in peat moss and burlap.

If trenching is unavoidable, the following distances should be maintained:

TRUNK DIAMETER (measured at 4.5 feet above natural grade)	DISTANCE FROM BOTH SIDES OF THE TRUNK
Up to 6 inches	Past dripline
6-9 inches	5 feet
10-14 inches	10 feet
15-19 inches	12 feet
over 19 inches	15 feet

A) Root Severance. No roots greater than 2 inches in diameter shall be cut without approval of the DRP Arborist. Tunneling under roots is the approved alternative. Prior to excavation for foundation/footing/walls, or grading or trenching within the *Tree Protection Zone,* roots shall be severed cleanly one-foot outside the *Tree Protection Zone* to the depth of the planned excavation. <u>When roots must be cut, they shall be cut cleanly with a sharp saw to sound wood and flush with the trench site.</u>

B) Excavation. Any approved excavation, demolition, or extraction of material shall be performed with equipment that is placed outside the *Tree Protection Zone*. Hand digging, hydraulic, or pneumatic excavation are permitted methods for excavation within the *Tree Protection Zone.*

C) Heavy Equipment. Use of backhoes, Ditch-Witches, steal tread tractors or other heavy vehicles within the *Tree Protection Zone* is prohibited unless approved by the DRP Arborist. If allowed, a protective root buffer is required.

4.30.4 Tunneling and Directional Drilling

Approved trenching or pipe installation within the *Tree Protection Zone* shall be either cut by hand, air-spade, or by mechanically boring a tunnel under the roots with a horizontal directional drill using hydraulic or pneumatic air excavation technology. In all cases, install the utility pipe immediately, backfill with soil and soak with water within the same day. Tunneling under the root system can greatly reduce both damage to the tree and the cost to repair landscape and other features destroyed in the trenching process. There are times, such as when working in rocky soils and slopes, when tunneling is not a reasonable alternative.

The following recommendations for tunneling depths should be observed:

TRUNK DIAMETER (DBH)	MINIMUM TUNNEL DEPTH
Less than 12 inches	24 inches
12 inches or more	36 inches

4.30.5 Alternative Methods for Hardscape to Prevent Root Cutting

The following remedies should be considered as an alternative to severing tree roots:

A) Grinding a raised walkway or concrete pad
B) Ramping the walkway surface over the roots or lifted slab with pliable paving.
C) Routing the walkway around tree roots
D) Permeable paving materials (e.g., decomposed granite), interlocking pavers, or flagstone walkways on sand foundations

4.30.6 Using Alternative Base Course Materials

Engineered structural soil mix is an alternative material for hardscape areas near trees. More information can be found at www.amereq.com.

4.40 Tree Maintenance During Construction

Providing adequate maintenance can mitigate stressful changes that occur to a tree's environment during construction. To remain vigorous the tree needs to maintain stored carbohydrates and preserve the effectiveness of its growth regulators. It is recommended that large projects provide:

4.40.1 Irrigation

Providing supplemental irrigation for trees under water stress may be the single most important treatment. Irrigation should be designed to wet the soil within the *Tree Protection Zone* to the depth of the root zone and to replace that water once it is depleted. Light, frequent irrigation should be avoided. Create a six-inch berm around trees at the edge of the *Tree Protection Zone* and fill with no more than six inches of mulch. Fill the basin with water. Irrigation should wet the top two to three feet of soil to replicate similar volumes and normal seasonal distribution.

4.40.2 Soil Compaction Mitigation

To prevent negligent encroachment into the *Tree Protection Zone,* trees to be preserved during construction must have the specified type of protection fences in place at all times. Removal of fences, even temporarily, to allow deliveries or equipment access is not allowed unless approved by the DRP Arborist and a root buffer is installed. The root buffer components: mulch, gravel and plywood, must be maintained continually to assure its effectiveness against soil compaction.

4.40.3 Dust Control

During periods of extended drought, wind or grading, trunks, limbs and foliage should be sprayed with water to remove accumulated construction dust.

4.50 Damage to Trees

4.50.1 Reporting Injury to Trees

Any damage or injury to trees shall be reported as soon as possible to the Project Manager or Construction Supervisor, and always to the Park Maintenance Supervisor. The Park Maintenance Supervisor needs to be aware of an injured tree in order to monitor its recovery or progress. Injuries to roots and branches must be repaired immediately.

4.50.2 Contractor Subject to Penalties.

If a tree designated to remain is removed or irreversibly damaged as determined by the Recreation and Parks Arborist, a contractor may be required to install a replacement tree matching in size, quality and variety, using an contractor designated by the Recreation and Parks Arborist. If an acceptable replacement tree is not available, the contractor may be required to pay damages to the City for the value of the damaged tree in accordance with the guidelines set forth in the Guide for Plant Appraisal, 9th Edition, using the Trunk Formula Method.

4.50.3 Employees Subject to Discipline

In the event of damage to above- or below-ground parts of park trees, the Construction Supervisor or Park Maintenance Supervisor shall conduct an investigation to determine the cause of the damage. If it is found that damage was caused due to the error, negligence, or willfulness of a Department employee, then that employee may be subject to appropriate disciplinary action.

4.60 Documents to be Included in all Projects

4.60.1 Model Tree Protection Specifications for Designers and Project Managers (Appendix G)

This document should be distributed to the Planning and Construction Designers, Project Managers, City Inspectors, bidding contractors, and contracted designing firms.

4.60.2 Tree Protection Summary and Instructions on How to Prevent Damage to Trees During Construction (Appendix I)

This document should be distributed to the Construction and Maintenance staff for implementation during all in-house projects.

4.70 Right Of Entry Permits and Documents to be included with every permit

Carnivals and festivals that are celebrated in our parks provide exceptional and enriching opportunities that bring our communities together. These activities can potentially affect the park environment. Filming crews, food concessions, permitted vendors, and special events activities affect the physical properties of our parks and trees.

In order to sustain a healthy urban forest, it is imperative that all Department staff understands the need to protect park trees. Every individual, organization or agency given a Right of Entry, permit or agreement to enter Department property, should be in compliance with Department policies protecting park trees and be given documentation the will help to ensure tree protection during the permitted activity. The document titled Instructions on How to Prevent Damage to Trees During Construction (Appendix I) shall be distributed to every permittee and the permittee shall comply with these instructions.

TIMBER PRODUCTS
We Deliver Confidence. ®

Sparano + Mooney Architecture
Attn: Jorge Beltran
642 Moulton Ave. Studio W4
Los Angeles, Ca. 90031

PROJECT:	**Bath House for Granada Hills Recreation Center** **16730 Chatsworth Street / Granada Hills, Ca. 91340**
SUBJECT:	**Wood Framing Inspection**
INSPECTION DATE:	**December 15, 2017**
TP INSPECTOR:	**Jeff Reith**
REPORT:	**SER171215**

PROCEDURE / SCOPE:

An inspection was conducted to determine the condition of the exposed roof framing. In members showing signs of distress, sounding, drilling, and pick tests were used to determine the presence of deterioration and estimate the amount of any damage occurring in the members.

SUMMARY OF RESULTS:

1. There were three (3) beams found in the interior with decay affecting approx. 25 – 30% of the cross section.
2. Four (4) areas of plywood roof sheathing were found with decay affecting the outer veneer to the entire thickness.
3. Six (6) beams on the exterior of the building show deterioration from termites and / or decay affecting from 25% –75% of the cross section.

FINDING LOCATIONS

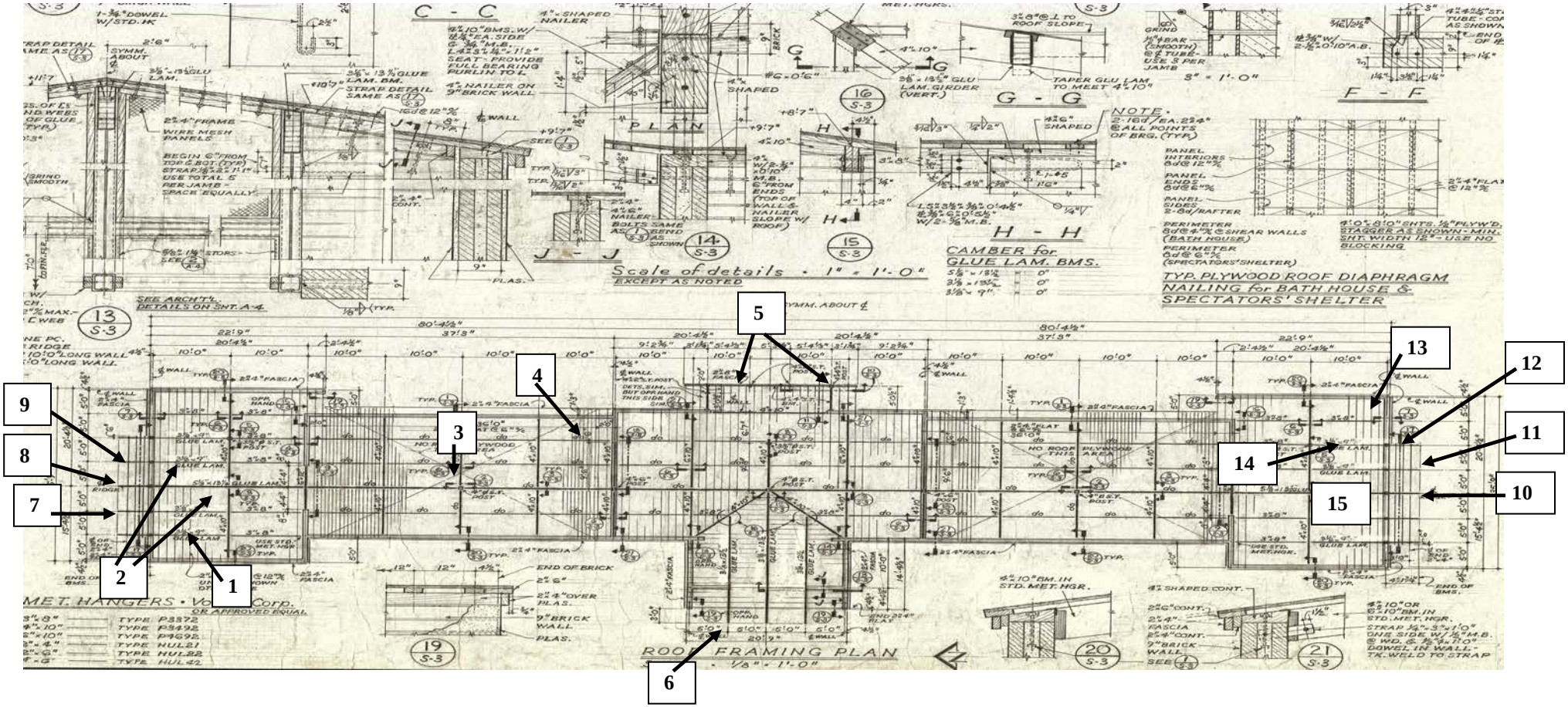

SER171212

FINDINGS:

FINDING	ITEM	CONDITION
1	3x7 glulam Mens Restroom	1” deep surface decay on east side of beam, extending 48” L. 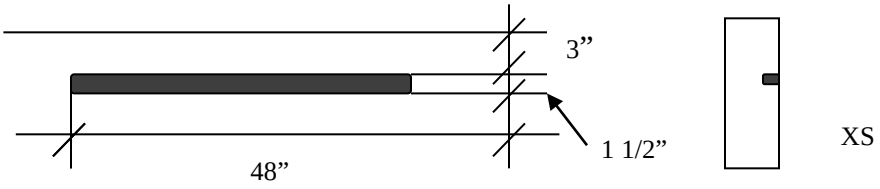  
2	Plywood Sheathing Mens Restroom 	The plywood roof sheathing shows evidence of breaks and surface deterioration in the outer veneer up to 12’ from the north wall.  

FINDINGS:

FINDING	ITEM	CONDITION
3	5 1/8" x 12 ¾" glulam at center column, Mens Changing Area	Localized decay in top of beam affecting 25 – 30% XS, 12" long. Located under an opening in the ridge of the roof. 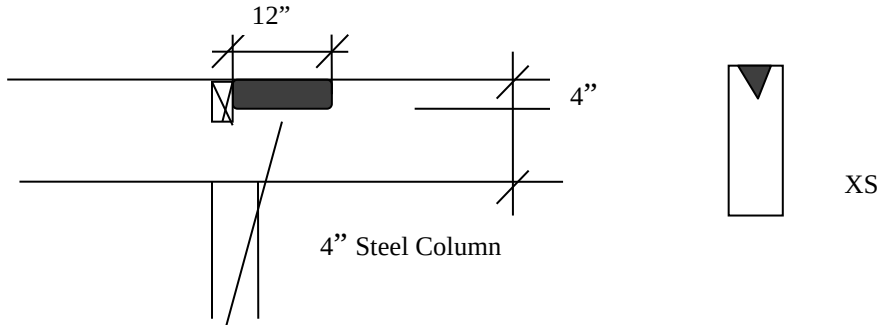 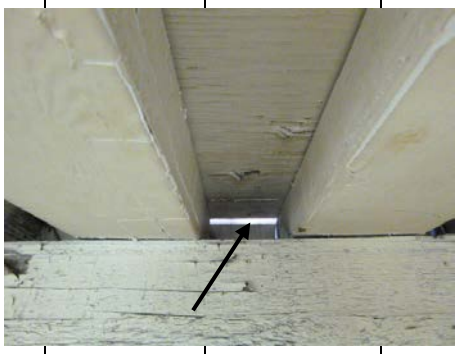  
4	Men's changing area Plywood sheathing	12" x 12" area of roof sheathing decay  

FINDINGS:

FINDING	LOCATION	CONDITION
5	Pool Observation Room, Plywood sheathing	The roof sheathing is decayed along the edge 14” for most of the length of this area.  
6	3”x 12” glulam on west entrance	Decay in top 3” x 12” long, 75% XS 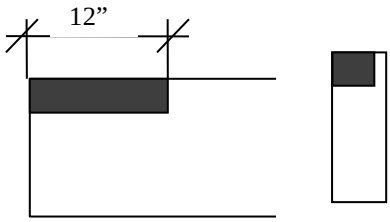  

FINDINGS:

FINDING	LOCATION	CONDITION
7	3 1/8”x 8 ½” glulam on north entrance	Decay in top 3” x 17” long, 85% XS 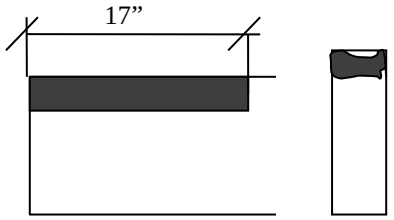 XS  
8	5 1/8” x 13” glulam on north end	Drywood termite damage in mid – depth at end 21”, 50% XS 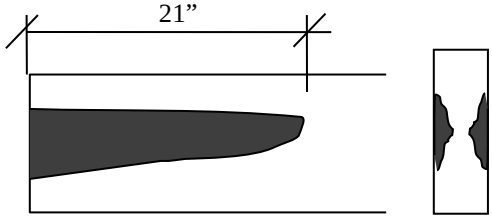 XS  

FINDINGS:

FINDING	LOCATION	CONDITION
9	3 1/8" x 8 ¼" glulam on north end	Drywood termite damage in mid – depth at end 15", 50% XS 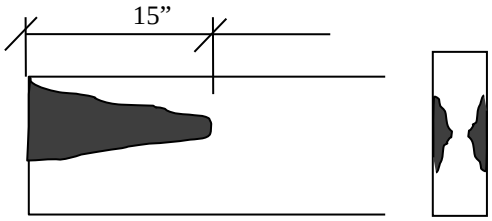 XS  
10	5 1/8" x 13" glulam on south end	Drywood termite damage on east side, approx.. 25% XS 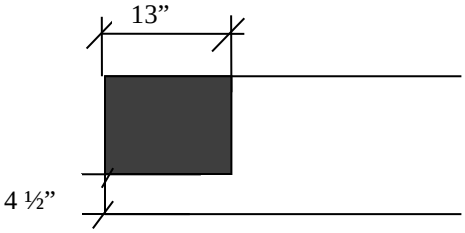 XS 

FINDINGS:

FINDING	LOCATION	CONDITION
11	3 1/8" x 8 ¼"glulam on south end	Heavy drywood termite damage on end 25", approx.. 75% XS on end and gradually reduces to 25% XS. 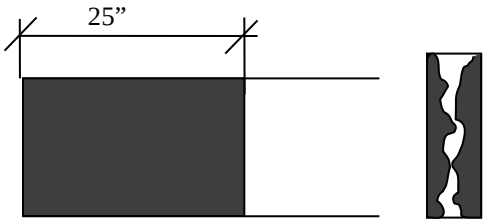  
12	Plywood sheathing on south end	Sheathing is decayed on end, 24" long x 6" wide 

FINDINGS:

FINDING	LOCATION	CONDITION
13	Plywood sheathing on southeast end	Sheathing is decayed on end, 12 - 18” wide at corner of roof.  
14	3 1/8” x 8 ¾” glulam Womens Restroom	½” – ¾” deep surface decay scattered on west side of beam, extending 42” L. 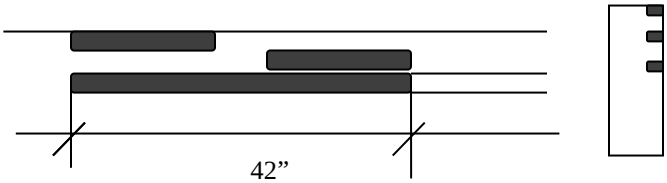 XS  

FINDINGS:

FINDING	LOCATION	CONDITION
15	Plywood Sheathing Womens Restroom	The plywood roof sheathing shows light evidence of surface deterioration in the outer veneer up to 12' from the south wall.  

David H Conner
Timber Products Inspection, Inc.

THIS PAGE INTENTIONALLY LEFT BLANK

ALTERNATE BUILDING MATERIALS/PRODUCTS APPROVAL REQUIREMENTS

PURPOSE

This information bulletin clarifies the California Building Code (CBC), California Residential Code (CRC), and the Los Angeles Residential, Building, and Municipal Codes (LARC, LABC, and LAMC) requirements relating to the approval of alternate building products, materials and methods of construction.

All building materials, products and methods of construction shall be recognized for use and as prescribed by the Los Angeles Building Code (LABC).

The Department of Building and Safety (LADBS), hereby referred to as the Department, may grant a general approval for an alternate material, product or method of construction provided that the alternate is at least equivalent to the prescribed device, material or method of construction. Department approval of new or alternate materials and methods of construction may be granted by the Department in accordance with Section 98.0501 of the Los Angeles Municipal Code (LAMC) through the use of product listings, approvals and evaluation reports by approved agencies, or Los Angeles Research Reports (LARR).

DEFINITIONS

Approved - Acceptable to the Superintendent of Building. (LABC 202)

Approved Agency - An established and recognized agency regularly engaged in conducting tests or furnishing inspection services which has been approved. (LABC 202)

Approved Listing Agency Any agency approved by the enforcing agency, unless otherwise provided by law, which is in the business of listing and labeling and which makes available at least an annual published report of such listings in which specific information is included that the product has been tested to recognized standards and found to comply. (LABC 202)

Approved Testing Agency - An agency which is determined by the enforcing agency, except as otherwise provided by law, to have adequate personnel and expertise to carry out the testing of systems, materials types of construction, fixtures or appliances. (LABC 202)

Approved Fabricator - An established and qualified person, firm or corporation approved by the Superintendent of Building, Los Angeles Department of Building and Safety, pursuant to Chapter 17 of this code.(LABC 202)

Approved Source - An independent person, firm or corporation, approved by the Superintendent of Building,

As a covered entity under Title II of the Americans with Disabilities Act, the City of Los Angeles does not discriminate on the basis of disability and, upon request, will provide reasonable accommodation to ensure equal access to its programs, services and activities.

who is competent and experienced in the application of engineering principles to materials, methods or systems analyses. (LABC 202)

Authority Having Jurisdiction – An organization, office, or individual responsible (i.e., Los Angeles Department of Building and Safety) for enforcing the requirements of a code or standard, or for approving materials/products.

Label - An identification applied on a product by the manufacturer that contains the name of the manufacturer, the function and performance characteristics of the product or material, and the name and identification of an approved agency and that indicates that the representative sample of the product or material has been tested and evaluated by an approved agency (see Section 1703.5, "Manufacturer's designation" and "Mark"). (LABC 202)

Labeled - Equipment, materials or products to which has been affixed a label, seal, symbol or other identifying mark of a nationally recognized testing laboratory, inspection agency or other organization concerned with product evaluation that maintains periodic inspection of the production of the above labeled items and whose labeling indicates either that the equipment, material or product meets identified standards or has been tested and found suitable for a specified purpose. (LABC 202)

Listed - Equipment, materials, products or services included in a list published by an organization acceptable to the Superintendent of Building (Los Angeles Department of Building and Safety) and concerned with evaluation of products or services that maintains periodic inspection of production of listed equipment or materials or periodic evaluation of services and whose listing states either that the equipment, material, product or service meets identified standards or has been tested and found suitable for a specified purpose.(LABC 202)

MATERIAL/PRODUCT EVALUATION REPORTS AND RESEARCH REPORTS

The Los Angeles Department of Building and Safety (LADBS) "approves" building materials/products by:

- Accepting product approvals and listings by Department approved listing agencies, or
- Accepting Evaluation Reports (ER) by a Nationally Recognized Model Code Agency, or
- Issuing Los Angeles Research Reports (LARR), or
- Approving one-time use of creative/innovative job specific materials/products.

Note: For alternate products, material and components as part of a building lateral force resisting system (LFRS), an Evaluation Report, by a Nationally Recognized Model Code Agency, shall include a supplement to show compliance with the seismic and wind requirements of the Los Angeles Building and Residential Codes.

Products having an ICC-ES evaluation reports with supplemental approval of Los Angeles Building and Residential Codes requirements can be found at the following link:
https://icc-es.org/evaluation-report-program/la-reports-directory/

As a covered entity under Title II of the Americans with Disabilities Act, the City of Los Angeles does not discriminate on the basis of disability and, upon request, will provide reasonable accommodation to ensure equal access to its programs, services and activities.

Products having an IAPMO-ES evaluation reports with supplemental approval of Los Angeles Building and Residential Codes requirements can be found at the following link:
http://www.iapmoes.org/Pages/LACodeReports.aspx

In consideration of approving materials/products, LADBS has categorized the materials/products into three categories as listed below:

Category 1: Non-Structural, Fire Life Safety,
Category 2: Structural Non-Lateral- Force-Resisting System (Non-LFRS) component, and
Category 3: Structural Lateral-Force-Resisting System (LFRS) component.

An LARR is evidence that a manufacturer of a material/product has provided the code-required information to LADBS to approve the material/product. Similarly, an ER, by a Nationally Recognized Model Code Agency, is evidence that a product has met the code requirements/standards. In addition, there are creative materials/products that are not explicitly allowed in the code may be approved as "Alternate Materials" in accordance with LABC Section 104.2.6. LADBS or a Nationally Recognized Model Code Agency approves the Alternate Materials by issuing an LARR or ER respectively. When creative materials/products are used for a specific project, the one-time approval process may be used.

LARRs or ERs for materials/products shall be based on IBC (2015 or 2018 IBC) model codes consistent with the LABC versions applicable for plan submittal dates. For example, building permit applications filed after January 1, 2020, are required to comply with the 2018 IBC as modified by the 2019 CBC and adopted into the 2020 LABC. Likewise, building permit applications filed before January 1, 2020, are required to comply with the 2015 IBC as modified by the 2016 CBC and adopted into the 2017 LABC.

The use of products/material specified on plans submitted after the expiration date of the LARR may be allowed after the application for renewal of the LARR has been accepted by the LADBS Engineering Research Section on a case-by-case basis.

MATERIAL/PRODUCT LISTING AND LABELING

Certain materials/products are required to be "listed" or "labeled" by the codes. These materials/products do not require an LARR nor an ER by a Nationally Recognized Model Code Agency, as long as the manufacturer of these products provides code compliance proof as follows:

- When the codes require the material/product to be "listed", a City of Los Angeles approved listing agency is required to "list" the material/product.

- When the codes require the material/product to be "labeled", a City of Los Angeles approved listing agency is required to "label" the material/product.

As a covered entity under Title II of the Americans with Disabilities Act, the City of Los Angeles does not discriminate on the basis of disability and, upon request, will provide reasonable accommodation to ensure equal access to its programs, services and activities.

NATIONALLY RECOGNIZED MODEL CODE AGENCY (LAMC Section 98.0501)

In order to be recognized as a Nationally Recognized Model Code Agency, the agency shall comply with the following requirements:

1. The agency shall be a developer and publisher of a code used as a model or standard for building and safety departments throughout the United States.

2. The agency shall file, with LADBS Engineering Research Section, an acceptable Compliance Certificate (attached) certifying the following:
   a. The agency's evaluation reports are available to the public via the internet.
   b. Test data are established in laboratories approved by the model code organization using a system of safeguards against conflict of interest, covering the agency itself, its owners and individual employees. This safeguarding system needs to be equivalent to those used by LADBS in "Information Bulletin P/GI 2020-028 Guidelines for Recognition of Testing Agencies".
   c. The evaluation criteria used to approve the products are published and available for review by the public.

3. The evaluation reports and evaluation criteria are established through a transparent process allowing for input by the public with appeals resolved by an independent expert panel.

   Technical questions from the public about the evaluation reports are to be answered by the model code agency.

FREQUENTLY ASKED QUESTIONS

Below are frequently asked questions and answers related to the Los Angeles Research Report requirements and approval:

1. Do all building materials/products require an LARR and/or ER?

Any materials/products that have code specified capacities/design values do not require an LARR nor Nationally Recognized Model Code Agency reports (i.e. bolts, clevis, cotter pins, and sawn lumber). When materials/products are not specified in the code, the material/product may require an approval in the form of an LARR and/or ER based on the application of the material/product. See Table 1 "Examples of Materials/products that Require an LARR and Do Not Require an LARR," in this bulletin for examples of Categories 1, 2 and 3 materials/products.

2. What are the different LADBS approvals I can obtain for the building materials / products?

LADBS offers two different types of building materials/products approvals as follows:

As a covered entity under Title II of the Americans with Disabilities Act, the City of Los Angeles does not discriminate on the basis of disability and, upon request, will provide reasonable accommodation to ensure equal access to its programs, services and activities.

a. **General Approval** – This approval is for mass produced, alternative materials and assemblies not specifically provided for in the LABC and may be used for any project site with this type of approval. This approval is referred to as a "Los Angeles Research Report" (LARR).
b. **One-Time Approval** – A one-time approval is granted to a material/product that will be used only for a single, project specific case and allowed to be used only once.

3. What is the process of obtaining an LARR?

The process to obtain an LARR for alternate products and materials is as follows:

a. Submit the following information to the Los Angeles City Department of Building and Safety Building Research Section: product literature describing how the product is to be used, substantiating data (i.e. test reports by approved third party testing agency, engineering analysis), a completed application form for the new LARR, along with a check in U.S. dollars drawn on a U.S. bank.
b. Once this information is received, the application package will be reviewed for completeness. If any deficiencies are determined, a letter will be sent to the applicant stating the deficiencies requiring correction.
c. After determining the application package is complete, the application will be logged in and assigned a log number and placed in line for review. It takes approximately five weeks for the application to be assigned an LADBS engineer.
d. The substantiating data submitted will be evaluated to determine if it is equivalent to the prescribed device, material, or method of construction specified by the Los Angeles City Building Code in terms of quality, effective time period of fire resistance, strength, effectiveness, durability, and safety.
e. After reviewing the substantiating data, the LADBS engineer assigned to the application will write a letter stating their comments and the information needed to complete the evaluation, if necessary.
f. Upon resolution of all comments, a draft copy of the Los Angeles City Research Report will be written. The draft copy of the Research Report will be e-mailed to the applicant for review and comment.

After all comments from the applicant have been resolved, the Research Report will be submitted to the Chief of the Building Research Section for the final review and approval. A signed copy of the Los Angeles Research Report will be mailed to the applicant and will also be posted on the LADBS web site.

4. How do I obtain an application form for LARR?

An application form for a Los Angeles Research Report is available from the Los Angeles Department of Building and Safety (LADBS) web site (http://ladbs.org/LADBSWeb/building-research-lab.jsf). Click on the link to download the form, "Application for New General Approval or Technical Modification." Instructions to complete the application form may be found at, http://ladbs.org/LADBSWeb/LADBS_Forms/TestLab/LARR_instruction.pdf.

As a covered entity under Title II of the Americans with Disabilities Act, the City of Los Angeles does not discriminate on the basis of disability and, upon request, will provide reasonable accommodation to ensure equal access to its programs, services and activities.

5. How long does it take to obtain an LARR?

It takes approximately five weeks for an application for an LARR to be assigned to the staff and an additional three to five weeks to complete the evaluation, and issue the final copy of the research report. If the substantiating data is incomplete, such as missing test reports, testing not conducted by an approved testing agency, incomplete or missing engineering calculations, etc., then the time to obtain an LARR may take longer. Expedite report review is available pursuant to LAMC Section 98.0422. The amount of the fee for this service is in addition to the normal review fee and is equal to one-half of the normal review fee. The fee expedite service will reduce the time to assign the application from approximately five weeks to two weeks and will reduce the review period from three to five weeks to three weeks.

6. What is the process of obtaining a one-time approval?

Alternate materials/products may be approved for project specific cases with the following process:

a. Submit the following information to the LADBS Plan Check Supervisor for the specific project: product literature describing how the product is to be used, a completed application form for a new general approval, substantiating data (i.e. test reports by approved third party testing agency, engineering analysis), a completed Modification of Building Ordinances form, along with a check in U.S. dollars drawn on a U.S. bank for associated application fees.
b. The substantiating data submitted will be evaluated to determine if it is the equivalent of the prescribed device, material, or method of construction specified by the Los Angeles Building Code in terms of quality, effective time period of fire resistance, strength, effectiveness, durability, and safety.
c. Requests may be approved once it is determined that the alternative materials/products are code equivalent.

This one-time approval may not be reused for future projects.

7. How long does it take to obtain a one-time approval?

The review and approval for a one-time approval may take a few days to a few weeks, depending on the level of complexity of the requested approval and completeness of the data provided for the material/product approval.

8. Who can apply for approval?

Materials/products manufacturer or distributor (for general or one-time approval) and the end user (engineer or architect) of the material/product can apply for the approval.

9. How long is the approval good for, and where do I find it?

The general approval (LARR) is good for 12 months. The product approval letter indicates the duration and

As a covered entity under Title II of the Americans with Disabilities Act, the City of Los Angeles does not discriminate on the basis of disability and, upon request, will provide reasonable accommodation to ensure equal access to its programs, services and activities.

expiration date of the approved product. A copy of the approval letter is posted under "Research Report Index," on the web page at, http://ladbs.org/LADBSWeb/building-research-lab.jsf.

Also, a list of recently approved LARRs is posted under the "Recently Approved/Renewed Research Reports and Laboratory Approval" at,
http://ladbs.org/LADBSWeb/LADBS_Forms/TestLab/Recently_Approved_New_Reports.pdf

10. Can I expedite the review process?

Yes, you can. Pursuant to LAMC Section 98.0422, expedite review process is available for the amount of the fee equal to one-half of the normal review fee.

11. How can an approval be renewed?

Only products that have General Approvals (not one-time approvals) may be renewed. About 60 days before an approval expires, the original applicant needs to take the following actions:

a. Submit a completed renewal application form with original signatures (see http://ladbs.org/LADBSWeb/LADBS_Forms/PlanCheck/PC-STR.App19-Renewal_4GenApprvl.pdf).
b. Submit the application fee as marked on the application form. Make check payable to "Department of Building and Safety, City of Los Angeles."
c. Submit current material/product information along with an explanation of any changes to the material/product from the previous approval.

Attachments:

- Table 2 – Examples of Materials/products That Require an LARR and Do Not Require an LARR
- Compliance Certificate – Nationally Recognized Model Code Agency

Table 2 – Examples of Materials/Products That Require an LARR or an ER

ER Required[4]	ER with LABC/LARC Supplement or LARR Required[123]
Joist Hangers Open Web Truss I-Joist Rebar Mechanical Splice LVL - Laminated Veneer Lumber PSL – Parallel Strand Lumber Truss Plates Skylights Gypsum sheathing Suspended ceilings meeting prescriptive requirements specified in IB 2011-040 Non-Shrink Grout. Plastic Composite Decking & Guardrails Glass Guardrails	Metal/Steel Deck Fiber reinforcement for concrete/masonry strengthening Expansion Bolt (concrete/masonry) Adhesive Anchor (concrete/masonry) Concrete Screw Anchor Walk-in-cooler (over 400 sf.) Pre manufactured shear Wall Prefab Shear panel – truss plate Shrinkage compensating device Moment Frame Connection Curtain Wall Connectors in plane Shot Pins for diaphragm connection Shear Wall Panels

As a covered entity under Title II of the Americans with Disabilities Act, the City of Los Angeles does not discriminate on the basis of disability and, upon request, will provide reasonable accommodation to ensure equal access to its programs, services and activities.

Insulating Concrete forms Preservative treatment of wood for decay and termite protection Glass fiber lath (not used in shear walls) Shot pins (no diaphragm connection) Mortar/grout admixture Clay/concrete roofing tiles Cold Formed Steel Joist Hangers Interior non-load bearing partitions (no in-plane shear) Cold formed Steel Studs Fiberglass Pool/Spa Fire Retardant Treated Wood Access Floors Roof Pedestals supporting non-combustible tile Low profile pedestals Fire Classification Roofing/Walking Deck	Sill plate connector (bent strap) Hold down Helical Foundation Pier for Remedial Repair Exterior Insulation and Finishing System (EIFS) Shear Resistor Rails Shear Connector Studs (Welded Studs) Veneer anchors Wood Screws Nails Sandwich panel curtain wall Headed Rebar for reduced lap splice Post Tensioning Anchor System

1. LADBS recognizes ICC or IAPMO evaluation reports with LABC-LARC Supplements for Category 3 products as being compliant with the seismic or wind requirements of the Los Angeles Building Code.
2. Products having an ICC-ES evaluation reports with supplemental approval of Los Angeles Building Code requirements can be found at the following link:
   www.icc-es.org/ladbs directory
3. Products having an IAPMO-ES evaluation reports with supplemental approval of Los Angeles Building Code requirements can be found at the following link:
   http://www.iapmoes.org/Pages/LACodeReports.aspx
4. These materials/products do not require an LARR when code compliance is proven with a valid Nationally Recognized Model Code Agency Evaluation Report.

As a covered entity under Title II of the Americans with Disabilities Act, the City of Los Angeles does not discriminate on the basis of disability and, upon request, will provide reasonable accommodation to ensure equal access to its programs, services and activities.

NATIONALLY-RECOGNIZED MODEL CODE AGENCY COMPLIANCE CERTIFICATE

Please submit this completed form to the City of Los Angeles, Department of Building and Safety, Engineering Research Section, 201 N. Figueroa St., Rm. 880, Los Angeles, California 90012 (http://ladbs.org/LADBSWeb/engineering-research-lab.jsf)

Nationally-Recognized Code Agency's Name:
Nationally-Recognized Code Publication's Name:
List of all the Jurisdictions that Adopted Code:
Agency Contact Name: Phone: Address: e-mail:
Agency's Web Home Page:
Evaluation Reports Web Address:
As an officer of the agency, I certify that **ALL**: 1. evaluation reports are available to the public via the internet, 2. tests data was established in laboratories approved by the model code organization using a system of safeguards against conflict of interest, covering the agency itself, its owners and individual employees, equivalent to those used by LADBS in "Information Bulletin P/BC 2017-058 Guidelines for Recognition of Testing Agencies," 3. evaluation criteria used to approve the products shall be published and available for review by the public on my agency's web page, 4. evaluation reports and evaluation criteria were established through a transparent process, allowing for input by the public with appeals resolved through an independent expert panel, and 5. technical questions from the public about the evaluation reports are answered by my agency.
Signature:_____ date: _____ Print Name: _____ Position: _____
LADBS ERS Accepted by: _____ date: _____ No.: _____

As a covered entity under Title II of the Americans with Disabilities Act, the City of Los Angeles does not discriminate on the basis of disability and, upon request, will provide reasonable accommodation to ensure equal access to its programs, services and activities.

THIS PAGE INTENTIONALLY LEFT BLANK

NOTICE

CITY OF LOS ANGELES, CALIFORNIA
DEPARTMENT OF RECREATION AND PARKS
For Pre-Qualified On-Call General Contractors for New Facility Construction
INSTRUCTION TO BIDDERS, PROPOSAL, AFFIDAVIT AND BOND FOR

GRANADA HILLS POOL AND BATHHOUSE REPLACEMENT

16730 Chatsworth Street, Los Angeles, CA 91344

Sunshine Canyon Trust Fund
And
Quimby Fund

W.O. No. E170517F

The Board of Recreation and Park Commissioners Office is located at:
221 NORTH FIGUEROA STREET, SUITE 300, LOS ANGELES, CA 90012

"For the safety of all parties involved during the current COVID-19 Pandemic, bids will be received electronically only. No hard copy bids will be accepted. Bid proposals must be sent as **pdf attachments** via email via Dropbox and received no later than than 2:00 p.m. on Wednesday, April 13, 2022."

ATTENTION: The following are updates in the bid documents that must now be downloaded and processed through the City's www.labavn.org:

1. **Equal Benefits Ordinance (EBO) forms (see page 11 for instructions) (REVISED using BCA 6/2016)**
2. **Disclosure Ordinances Affidavit form (see page 20 for instructions)**
3. **The MBE/WBE/OBE Good Faith Effort process is now replaced by the Business Inclusion Program (BIP) to be processed online through www.labavn.org (see pages 15-15R for instructions)**

FAILURE TO COMPLY WITH THE CITY'S BIP OUTREACH REQUIREMENTS WILL RENDER THE BID NON-RESPONSIVE.

NOTE: SUBMITTING BIDS FROM SUBCONTRACTORS THAT ARE NOT ON THE CONTRACTOR'S PRE-APPROVED SUBCONTRACTOR LIST MAY RESULT IN THE BID BEING DETERMINED TO BE NON-RESPONSIVE.

THIS BID NOTICE IS INTENDED FOR GENERAL CONTRACTORS PRE-QUALIFIED BY THE DEPARTMENT OF RECREATION AND PARKS FOR NEW FACILITY CONSTRUCTION AND WHO HAVE ENTERED INTO A CONTRACT WITH THE DEPARTMENT FOR SUCH SERVICES. PER THE PROVISIONS OF SUCH CONTRACT, THIS BID NOTICE (INCLUDING THE INSTRUCTIONS AND PROVISIONS CONTAINED HEREIN) AND BID PROPOSAL SUBMITTED IN RESPONSE TO THIS BID NOTICE SHALL BE MADE A PART OF SUCH CONTRACT.
BIDDERS MUST COMPLETE AND SUBMIT ALL DOCUMENTATION AS REQUIRED IN THIS NOTICE REGARDLESS OF WHETHER SUCH DOCUMENTS WERE PROVIDED PREVIOUSLY AS PART OF THE PRE-QUALIFICATION PROCESS. FAILURE TO DO SO MAY RESULT IN THE BID BEING DETERMINED TO BE NON-RESPONSIVE.

IMPORTANT: Please note the following new requirements for this project:

1. **Iran Contracting Act of 2010 (see pages 23-23B revised 8/5/2020 version)**
2. **Senate Bill 854**
3. **Fair Chance Initiative for Hiring Ordinance (FCIHO)**
4. **PROJECT LABOR AGREEMENT**

CITY OF LOS ANGELES, CALIFORNIA, DEPARTMENT OF RECREATION AND PARKS
INSTRUCTIONS TO BIDDERS, PROPOSAL, AFFIDAVIT
AND BOND FOR

GRANADA HILLS POOL AND BATHHOUSE REPLACEMENT

16730 Chatsworth Street, Los Angeles, CA 91344

Sunshine Canyon Trust Fund and Quimby Fund

W.O. No. E170517F

Estimated Cost $7,898,000

BIDS MUST BE RECEIVED BEFORE 2:00 P.M. ON WEDNESDAY, **APRIL 13, 2022.** "For the safety of all parties involved during the current COVID-19 Pandemic, bids will be received electronically only. No hard copy bids will be accepted. Bid proposals must be sent as **pdf attachments** via Dropbox and received no later than 2:00 p.m. on Wednesday, April 13, 2022."

MINIMUM LICENSE REQUIREMENT: **"A" or "B"**	**CONTRACT COMPLETION TIME:**
LIQUIDATED DAMAGES: **$2,400.00** PER DAY TO BE ASSESSED AS SPECIFIED HEREIN	**CONSTRUCTION:** 499 **calendar days** **MAINTENANCE:** 49 **calendar days** **TOTAL** 548 **calendar days**

IMPORTANT INFORMATION: PRE-BID MEETING

A **Pre-Bid Meeting** for this project will be conducted on **Thursday, March 10, 2022 at 2:00 P.M.** via Google meet at meet.google.com/evb-zyok-erc or join by Phone Number (US) + 1 847-264-4562 PIN 690 604 751#

THE ANTICIPATED LEVEL FOR **MBE** is 18%, **WBE** is 4%, **SBE** is 25%, **EBE** is 8% and **DVBE** is 3%.

The purpose of the meeting is to inform prospective bidders of the submittal requirements through www.labavn.org and the provisions relative to the Supplemental Outreach, City Affirmative Action Program, Disclosure Ordinances Affidavit, Labor Code compliance requirements, and other City bidding and contracting requirements.

QUESTIONS:

- Concerning the BIP, send email to eng.bavn@lacity.org
- Concerning Affirmative Action Program, SDO and Labor Code compliance requirements should be directed to the Department of Public Works, Bureau of Contract Administration at (213) 847-1922 or email bca.eeoe@lacity.org.
- ALL technical questions/Requests for Information (RFIs) concerning the plans and specifications, contact the Project Manager in writing via E-mail: **alex.ngo**@lacity.org
- RFI deadline is no later than three (3) weeks before the bid due date.

The Board of Recreation and Park Commissioners may award a contract at any time within 90 days after receipt of bids.

THE BID OF ANY PARTY WHO HAS BEEN DELINQUENT OR UNFAITHFUL IN THE PERFORMANCE OF ANY FORMER CONTRACT WITH THE CITY MAY BE REJECTED.

DETACH BID PACKAGE FROM THE SPECIFICATIONS AND SUBMIT THE BID PACKAGE AS YOUR BID.

PRE-BID JOB WALK: Thursday, March 10, 2022 at 10:00 A.M. at the project site location: 16730 Chatsworth Street, Los Angeles, CA 91344

CITY OF LOS ANGELES REQUIREMENTS

INDEX PAGE NO.

NOTICE TO BIDDERS: Important Information

Bid Protest Procedures ---------- 3-3G

Proposal – Schedule Of Work And Prices ---------- 4-4A

Proposal – Signature Page ---------- 5

Affidavit To Accompany Proposals Or Bids ---------- 6

Bid Bond ---------- 7

Contractor Governmental Project Reference Sheet ---------- 8-8A

Notice To Prospective Contractors Pertaining To Non- Discrimination In Employment And Prevailing Wage Rates ---------- 9-9A

Equal Benefits Ordinance No. 175115 ---------- 10-10D

Equal Benefits Ordinance (**REVISED using BCA 6/2016 version)** ---------- 11

Nondiscrimination ● Equal Employment Practices ● Affirmative Action Construction & Nonconstruction Contractors (Vendors, Suppliers, Consultants) (**REVISED using BCA 6/2016 version)** ---------- 12

Anticipated Employment Utilization Report (**REVISED using BCA 8/2016 version)** ---------- 13

Excerpts From The California Labor Code Relating To Apprentices On Public Works ---------- 14-14B

City of Los Angeles Business Inclusion Program (BIP) ---------- 15-15R

Schedule "A" - Subcontractors And Suppliers ---------- 16-16A

Pledge Of Compliance With Contractor Responsibility Ordinance ---------- 17-17A

Responsibility Questionnaire (**REVISED using BCA 1/23/2020 version)** ---------- 18-18K

Security Guard Services ---------- 19

Disclosure Ordinances Affidavit ---------- 20

Municipal Lobbying Ordinance ---------- 21-21W

Bidder Certification-CEC Form 50 ***(Failure to submit page 22 will result in the bid being deemed NON-RESPONSIVE)*** _____ 22

Iran Contracting Act of 2010 ***(Failure to submit page 23A will result in the bid being deemed NON-RESPONSIVE)*** ------- 23-23B

California State Senate Bill 854 ***(Failure to comply with the requirements of this Senate Bill will result in the bid being deemed NON-RESPONSIVE)*** ---------- 2 pages

Required Insurance And Minimum Limits Form 146 ---------- 1 page

Contractors' Use of Criminal History for Consideration of Employment Applications Ordinance ---------- 1 page

Contractor Evaluation Program…… ---------- 1 page

PROJECT LABOR AGREEMENT INFORMATION:

- Project Labor Agreement (PLA) ---------- (68 pages)
- Public Works Infrastructure Stabilization Policy ---------- (15 pages)

PLANS, INDEX No.RP-300116 (454 Sheets)

GENERAL CONDITIONS

GENERAL REQUIREMENTS

SUPPLEMENTARY GENERAL REQUIREMENTS ***Failure to submit forms GR-S3 through GR-S7 with the bid will result in the bid being deemed NON-RESPONSIVE)***

TECHNICAL SPECIFICATIONS

APPENDIX

NOTICE TO BIDDERS: IMPORTANT INFORMATION

INSTRUCTION TO BIDDERS CHECK LIST (PAGES 3 – 3G)

Before submitting your bid, indicate whether you have properly completed, signed and returned the following with your bid. Failure to do so may cause your bid to be declared nonresponsive and rejected.

PLEASE INITIAL EACH ITEM BELOW WHEREVER A SPACE IS PROVIDED

1. GENERAL INFORMATION

The Secretary of the Board of Recreation and Park Commissioners of the City of Los Angeles, California, will receive for and on behalf of said Board of Recreation and Park Commissioners, at its office at 221 North Figueroa Street, Suite 300, Los Angeles, California, 90012 in said City, at or before the hour of **2** o'clock p.m., of **April 13, 2022,** sealed bids or proposals for **GRANADA HILLS POOL AND BATHHOUSE REPLACEMENT (W.O. No. E170517F).**

2. BID PROPOSAL **[Revised as of February 11, 2022]**

For the safety of all parties involved during the current COVID-19 pandemic, bids will be received electronically only. No hard copy bids will be accepted. Bid proposals must be in PDF format and submitted via Dropbox. The maximum file size for Dropbox submission is 2 GB. Dropbox submissions must be received by the deadline stated above and uploaded onto the following link:

https://www.dropbox.com/request/iteAPUDsJ5iHkZM19syk

The opening of bids will be conducted virtually through webinar. Those wishing to observe the bid opening may do so by joining the webinar using the following information:

Zoom webinar:
When: Wednesday, April 13, 2022 at 2:00 PM Pacific Time (US and Canada)
Topic: Granada Hills Pool and Bathhouse Replacement – Bid Opening

Please click the link below to join the webinar:
https://us02web.zoom.us/j/82166155034

Or One tap mobile :
US: +16699006833,,82166155034# or +12532158782,,82166155034#

Or Telephone:
Dial(for higher quality, dial a number based on your current location):
US: +1 669 900 6833 or +1 253 215 8782 or +1 346 248 7799 or +1 312 626 6799 or +1 929 205 6099 or +1 301 715 8592
Webinar ID: 821 6615 5034
International numbers available: https://us02web.zoom.us/u/kcnYZdJ3U4

Submission of a bid for this project will be considered to include the modifications and notifications above. The bid must further conform to the requirements of these instructions.

The bidder must state in figures the unit price or specific sums or both, as the case may be, for which the bidder proposes to supply all the materials and perform the work required by the plans and specifications.

Blank spaces in the proposal must be properly filled in, and the phraseology thereof must not be changed. Additions must not be made to the items mentioned therein. Any unauthorized conditions, limitations or provisions attached to a proposal may cause its rejection. Alterations by erasure or interlineation must be explained or noted in the proposal over the signature of the bidder. Original hard copy of the bid documents must be hand delivered as specified in these Instructions to Bidders.

No bids received after the time fixed for receiving them will be considered.

If the bid is made by an individual, it must be signed with the full name of the bidder, whose address must be given; if it is made by a co-partnership, it must be signed with the co-partnership name by a member of the firm, and the name and full address of each member must be given; and if it is made by a corporation, it must be signed as follows and the corporate seal must be attached to such signatures:

(a) Two signatures: One by the Chairman of the Board of Directors, President or any vice president and one by the Secretary, assistant secretary, chief financial officer or any assistant treasurer; or

(b) One signature by corporate designated individual together with the properly attested resolution of the Board of Directors authorizing the person to sign.

Bidders are invited to be present at the opening of proposals.

The bidder shall affix to its proposal the number of its license procured under the provisions of Article 5, Chapter 9, Division III of the Business and Professions Code of the State of California.

The said work must be done in strict conformity with specifications and/or plans therefore.

Bidders are advised that the Board of Recreation and Parks Commissioners has not authorized any other agency, internet service, or plan room distributor other than the City of Los Angeles Business Assistance Virtual Network (www.labavn.org) to distribute or sell bid documents for this project. Bidders are therefore further advised that submission of a bid on documents other than those obtained from the City of Los Angeles Business Assistance Virtual Network may cause the bid to be deemed non-responsive.

(a) Have you submitted a bid on all items of the proposal?..... _____ Initial

(b) Is proposal completed in ink or typewritten only? ..... _____ Initial

(c) Does your bid include sales tax? ..... _____ Initial

(d) Is the proposal properly signed as noted on the bottom of Proposal (page 5) and dated?..... _____ Initial

(e) Have you double-checked your prices, addition, bid amount and any deductive alternatives? ..... _____ Initial

3. RIGHT TO REJECT BIDS

The Board of Recreation and Park Commissioners reserves the right to reject any and all bids and to waive any informality therein

4. EXAMINATION OF SITE AND PROPOSED WORK

Bidders must examine and judge for themselves the location, physical condition and surroundings of the proposed work, the nature of the excavation to be made, if any, and the work to be done.

The plans for the work will show conditions as they are supposed or believed by the Engineer to exist, but it is not intended or to be inferred that the conditions as shown thereon constitute a representation or warranty, express or implied by the City, or its officers, that such conditions are actually existent, nor shall the City or any of its officers be liable for any loss sustained by the Contractor as a result of any variance between conditions as shown on the plans and the actual conditions revealed during progress of the work, or otherwise.

5. RELEASE FROM BID

No bidder will be released on account of errors in judgment, carelessness or lack of familiarity with the plans, specifications or site. A bidder may be released on account of clerical errors if he gives the Board of Recreation and Park Commissioners written notice of the error within five days of the bid opening and satisfies the Board of Recreation and Park Commissioners that the mistake was made in filling out the bid, not in judgment.

6. AFFIDAVIT OF NON-COLLUSION (Page 6)

Each proposal must have thereon or attached thereto the notarized affidavit of the bidder that such proposal is genuine, and not sham or collusive, or made in the interest or in behalf of any person not therein named, and that the bidder has not directly, or indirectly, induced or solicited any other bidder to put in a sham bid, or any other person, firm or corporation to refrain from bidding, and that the bidder has not in any manner sought by collusion to secure for himself an advantage over any other bidder. Any bid not accompanied by, or which is made without such affidavit, or in violation thereof, will not be considered. If the bidder is a corporation, said affidavit shall be signed by a duly authorized officer of the corporation. Any bidder making a false affidavit may be excluded from future bidding.

(a) Is Affidavit (page 6) properly filled in and signed? ..... _____ Initial

(b) Is Affidavit notarized including certificate of the notary and notary seal?..... Initial

7. BID BOND OR CHECK ACCOMPANYING BID (Page 7)

Each bidder must submit with its proposal either a check certified by a responsible bank in the City of Los Angeles or a cashier's check issued by a responsible bank, payable to the order of the City of Los Angeles, for an amount not less than 10 percent of the aggregate sum of the bid; or a corporate surety bond of a satisfactory surety company for said amount, and so payable as a guarantee that the bidder will enter into the proposed contract if it is awarded to it. If the successful bidder fails to enter into the contract awarded to it, and to supply the necessary faithful performance and labor and material bonds, as well as proof of the insurance coverage detailed in the notice of award, within ten days of receipt from the City of the contract and the proper bid forms, then the sum posted by certified or cashier's check or guaranteed by the bid bond is forfeited to the City. Such forfeiture shall not preclude recovery of any sum or costs over and above the amount posted or guaranteed which the City sustains by reason of such default or failure to contract.

NOTE:	BID BOND SUBMITTED ON A FORM OTHER THAN PAGE 7 IS NOT ACCEPTABLE AND BID WILL BE RULED NON-RESPONSIVE AND DISQUALIFIED.

If the successful bidder executes the contract and the accompanying faithful performance and labor and material bonds, and submits proof of insurance coverage within ten days of receipt of the contract and bond forms, the check for bond accompanying the successful bid will be returned. All checks accompanying rejected bids will be returned upon rejection. Bid Bonds cannot be returned, as they are part of the file; however, the Bond automatically expires 90 days from the date of the bid opening.

No bid will be considered unless it is accompanied by such certified or cashier's check or bond.

(a) Have you included a certified or cashier's check for an amount not less than ten percent (10%) of the total sum of the bid in accordance with item 7 above?; or ..... Initial

(b) Have you included a corporate surety bond (bid bond) for an amount not less than ten percent (10%) of the total sum of the bid in the Bid Bond form provided in this package (Page 7)?..... Initial

(c) If corporate surety bond (bid bond), is it properly filled out, signed by surety with seal, signed by bidder, and on form provided in this bid package? ..... Initial

(d) Have you thoroughly reviewed the instructions, information, award procedures and forms provided, and completed, signed all of the Business Inclusion Program (BIP) Forms thru the City of Los Angeles BAVN website; www.labavn.org (Pages 15 -15R) with your bid?. ..... Initial

(e) Have you listed on Schedule "A" all subcontractors, suppliers, and your firm regardless of the amount of money involved and have you indicated which of those firms listed qualify as a MBE, WBE, SBE, EBE or DVBE? ..... Initial

(f) Have you completed the participation section at the lower left corner of Schedule "A" and included your firm (if MBE/WBE/SBE/EBE/DVBE qualified) and all MBE/WBE/SBE/EBE/DVBE qualified subcontractors and/or suppliers in your calculation? ..... Initial

8. BONDS FOR FAITHFUL PERFORMANCE AND FOR PAYMENT OF LABOR, MATERIAL AND SUPPLIES

The amount of the bond to be given to secure the faithful performance of the contract for said work shall be 100 percent of the contract thereof, computed as hereinafter provided.

The Surety executing the bonds MUST appear in the Federal Register, a publication of the U. S. Department of the Treasury, and MAY NOT underwrite the bonds for more than the Treasury limitation expressly outlined in said Register.

The amount of the bond to be given to secure payment for labor, material, equipment and supplies furnished for the performance of the work to be done under the contract and for any work or labor of any kind done in connection therewith shall be equal to 100 percent of the contract price for the work. The contract price shall be computed from the quantities given in Schedule of Quantities herein and the prices bid in the proposal. The forms of bonds required for the faithful performance of the contract and to secure payment for material, labor and supplies will be such that the City may proceed against the Contractor and its sureties on the bonds immediately upon any default in the performance of the contract, or in payments for labor, material and supplies, without waiting for the completion of the work and the accumulation of damages.

The forms of bonds required may be examined at the office of the Board of Recreation and Park Commissioners, or copies will be furnished if desired, to those proposing to bid.

9. ADDITIONAL SURETIES

If at any time during the continuance of the contract, the sureties, or any of them, shall, in the opinion of the Board of Recreation and Park Commissioners, become irresponsible, the said Board of Recreation and Park Commissioners shall have the right to require additional and sufficient sureties, which the Contractor shall furnish to the satisfaction of the Said Board of Recreation and Park Commissioners within ten days after notice, and in default thereof the contract may be suspended by the said Board of Recreation and Park Commissioners and the work completed as provided in Section 45 of the General Conditions.

10. CONTRACTOR GOVERNMENTAL PROJECT REFERENCE SHEET (Pages 8-8A)

If your firm has not been awarded a project with the Department of Recreation and Parks within the last three (3) years, have you completed and submitted the above required pages with your bid?..... _____ Initial

11. NOTICE TO PROSPECTIVE CONTRACTORS PERTAINING TO NONDISCRIMINATION IN EMPLOYMENT (Pages 9-9A)

Has Bidder reviewed the requirements pertaining to discrimination in employment on page 9A and completed and signed at the bottom? ..... _____ Initial

12. PREVAILING WAGE RATES (Pages 9 - 9A)

Has Bidder reviewed the requirements pertaining to the payment of prevailing wage rate on page 9A ..... _____ Initial

13. EQUAL BENEFITS ORDINANCE

Has Bidder reviewed and complied with the Equal Benefits Ordinance through www.labavn.org? (Pages 10 – 11)..... _____ Initial

14. NON DISCRIMINATION, EQUAL EMPLOYMENT PRACTICES AND AFFIRMATIVE ACTION PROGRAM (CONSTRUCTION) (Pages 12 – 13)

(a) Has Bidder reviewed and complied with Nondiscrimination, Equal Employment Practices and Affirmative Action Program (Construction) pages 12 – 13?..... _____ Initial

(b) Has Bidder completed the ANTICIPATED EMPLOYMENT UTILIZATION REPORT (Page 13) and submitted report with your bid?..... _____ Initial

15. APPRENTICE UTILIZATION ON PUBLIC WORKS (Pages 14-14B)

Has Bidder reviewed the requirements pertaining to apprentice employment and training on Public Works projects, (pages 14 - 14B) and signed and submitted page 14B with your bid?..... _____ Initial

16. BUSINESS INCLUSION PROGRAM (BIP) AFFIDAVIT FORMS

Performance of a BIP outreach to Minority Business Enterprises (MBE), Women Business Enterprises (WBE), Small Business Enterprises (SBE), Emerging Business Enterprises (EBE), Disabled Veteran Business Enterprises (DVBE), and Other Business Enterprises (OBE) subcontractors must be completed on the Business Assistance Virtual Network (BAVN), www.labavn.org. All BIP outreach documentation must be submitted on BAVN by 4:00 p.m. on the calendar day following the date bids are received by the Board.

Has Bidder reviewed and complied with the requirements of the BIP through www.labavn.org? (Pages 15–15R)..... _____ Initial

17. SCHEDULE "A" – SUBCONTRACTORS AND SUPPLIERS INFORMATION FORM (Page 16, *et seq.*)

Bidders must submit with their bid the SUBCONTRACTORS AND SUPPLIERS INFORMATION FORM provided in the Bidding Documents as Schedule "A" (Page 16, et seq.). The Bidder must list itself and all subcontractors and/or suppliers regardless of the amount of money involved. Bidders must indicate if they and any of the other firms listed qualify as MBEs, WBEs, SBEs, EBEs, or DVBEs.

MBE/WBE/SBE/EBE/DVBE qualifications are defined and outlined in the accompanying BIP packet (pages 15-15R). Regardless of amount, the Bidder must list on Schedule "A" the names and addresses of all firms to be used with a complete description of work or supplies to be provided by each and the dollar value of such transaction. In the case of joint ventures who bid as primes, any one of two or more entities which comprise the joint venture may be listed as a MBE, WBE, SBE, EBE or DVBE subcontractor if the entity is otherwise qualified as such.

18. Has Bidder reviewed and complied with the Pledge of Compliance with Contractor Responsibility Ordinance and Contractor Responsibility Questionnaire and submitted required Documentation with your bid? (Pages 17 – 18K)……_____ Initial

19. Has Bidder reviewed and complied with the Disclosure Ordinances Affidavit through www.labavn.org? (Page 20)…..**_____** Initial

20. Has the bidder reviewed the revised Municipal Lobbying Ordinance and submitted the new CEC Form 50 with your bid? (Pages 21- 21W and Page 22). ***ALERT: Failure to submit page 22 - CEC Form 50 - with the bid will result in the bid being NON-RESPONSIVE***…..……..……..……

f. Protests from agencies concerned with contract compliance matters may be considered by the Board beyond the protest period. These protests will receive due consideration if the agency submits the protest in a timely period and such protest affects a bidder who appears to have a substantial and reasonable prospect of receiving an award if the protest is denied or accepted.

g. Protests meeting the above criteria will be analyzed and reported upon in a written report to the Board. Protesting parties will be notified of the time and date that the written report will be discussed in a public session of the Board. Protesting parties will be given the opportunity to present their arguments at the public session. ……..……_____ Initial

25. Has Bidder reviewed and complied with the Iran Contracting Act of 2010 (Pages 23-23A)? ***ALERT: Failure to submit the Iran Contracting Act of 2010 Compliance Affidavit (page 23A) with the bid will result in the bid being NON-RESPONSIVE*** ……..._____ Initial

26. Has Bidder reviewed and complied with the California State Senate Bill 854? ***(Failure to comply with the requirements of this Senate Bill will result in the bid being deemed NON-RESPONSIVE)***......_____ Initial

27. Has Bidder reviewed and complied with the **Fair Chance Initiative Hiring Ordinance** requirements? ......_____ Initial

28. Has Bidder reviewed and complied with the **PROJECT LABOR AGREEMENT** requirements?......_____ Initial

29. CONTRACT

The bidder to whom the award is made will be required to execute a written contract with the City, furnish good and approved bonds as herein specified, and furnish proof of adequate insurance coverage within ten days after the contract and bid forms are delivered to him.

The following documents are essential parts of the complete contract: The Notice Inviting Bids, Instructions to Bidders, Proposal and Specifications, and, if any, the plans for the work, all of which documents are on file in the office of the Board of Recreation and Park Commissioners.

30. ELECTRONIC SIGNATURE POLICY
(Types of Documents Permitted for Electronic and Scanned Signature)

This Policy is intended to broadly support the use of electronic signatures. Departments are encouraged to consult with the City Attorney's Office if Departments are uncertain if the electronic/scanned signature is acceptable for a document. However, below are examples of the types of documents where electronic/scanned signatures are allowed:

1. Memos, forms, board letters and other correspondence	Electronic/Scanned
2. Contracts	Electronic/Scanned
3. Certificates and Permits	Electronic/Scanned
4. Notarized Document	Scanned

Please note that Ethics Form 50 and 55 must be signed via a software that is accepted by the Ethics Commission (i.e. DocuSign, Adobe). (Issued March 19, 2020)

31. NAME OF CONTRACTOR _____

CONTRACTOR'S ADDRESS _____

STREET _____

CITY _____ STATE_____ ZIP CODE_____

32. CONTRACTOR'S LICENSE NUMBER _____ Expiration Date_____

33. LICENSE CLASSIFICATIONS _____

34. CONTRACTOR'S TELEPHONE NUMBER (_____)_____

35. BIDDER'S CHECK LIST

(a) Have you completed, signed and initialed all pertinent sections of the "Bidder's Check List"? ……._____Initial

(b) Have you included pages 3 thru 3G of the "Bidders Check List" with your bid? ..... _____Initial

FORM R&P 201-5M-12-72(t-28-45)

By: (Signature) _____ Date _____

PRINT NAME _____

TITLE OR POSITION _____

PLEASE INDICATE BY AN "X" WHETHER YOU READ ABOUT THE "NOTICE INVITING BIDS" FOR THIS PROJECT IN ONE OF THE FOLLOWING:

- ☐ BIDDER DIGEST
- ☐ DODGE CONSTRUCTION NEWS (GREEN SHEET)
- ☐ EASTERN GROUP PUBLICATIONS (EAST SIDE SUN)
- ☐ FILIPINO AMERICAN NEWS
- ☐ KOREA TIMES
- ☐ LA OPINION
- ☐ LOS ANGELES BUSINESS ASSISTANCE VIRTUAL NETWORK (BAVN)
- ☐ LOS ANGELES SENTINEL
- ☐ PLAN ROOM WEST
- ☐ RAFU SHIMPO
- ☐ THE LOS ANGELES WAVE NEWSPAPER (SOUTHWEST WAVE)
- ☐ WORLD JOURNAL
- ☐ OTHER (PLEASE SPECIFY) _____

PROPOSAL – SCHEDULE OF WORK AND PRICES
BIDDERS WILL NOT BE RELEASED ON ACCOUNT OF ERRORS

Los Angeles, CA _____20 __

TO THE BOARD OF RECREATION AND PARK COMMISSIONERS OF THE CITY OF LOS ANGELES:

The undersigned, having carefully examined the plans, read the accompanying Instructions to Bidders, and the Specifications for **GRANADA HILLS POOL AND BATHHOUSE REPLACEMENT (W.O. No. E170517F)** in and for the City of Los Angeles, and having personally visited the site of the work and made him/herself familiar with the conditions hereby proposes to furnish all materials and do all the work required to complete the said work in accordance with the said plans, if any, and specifications, for the unit prices and/or lump sums named in the following schedule:

SCHEDULE OF WORK AND PRICES

NOTE: BIDS MUST BE IN INK OR TYPEWRITTEN. NO BIDS IN PENCIL WILL BE CONSIDERED. LUMP SUM SHALL BE INCLUSIVE OF SALES TAX

ITEMS	PRICES IN FIGURES	
	Dollars	Cents
(A) Base Bid: …… The scope of the project includes the demolition and renovation of the existing 431-square-foot public restrooms, all according to the plans and specifications.	**$**	
(B) Mobilization……	**$**	
C) Allowances: Allowance for Permit……	**$ 70,600**	**00**
(C) Total Bid: …… Sum of (A) + (B) + (C).	**$**	

The lowest responsible bidder shall be the lowest responsible bidder who submits the Lowest Bid. The Lowest Bid shall be the lowest Total Bid price.

All work done and materials furnished shall be in conformity with the Plans and Specifications for the work adopted by the Board of Recreation and Park Commissioners at its meeting of **March 3, 2022** and as set forth in this bid package (including the Project Manual).

a

SCHEDULE OF WORK AND PRICES
(Continued)
PROPOSAL – SIGNATURE PAGE

(Name of Contractor) _____ agree(s) to begin work and complete it on or before the dates set therefore in the specifications.

(Name of Contractor) _____ agree(s), furthermore, that in case of Contractor default in executing the required Contract, with necessary bonds, within the time fixed by the Instructions to Bidders, the proceeds of the check or bond accompanying this bid shall become the property of the City of Los Angeles.

(a) INDIVIDUAL (Sign here if individual)

(Signature) _____

(Address) _____

(b) CO-PARTNERSHIP

Name of co-partnership firm _____

(Address) _____

_____

(Signatures of co-partners) _____

1. _____

(Address) _____

_____

2. _____

(Address) _____

_____

3. _____

(Address) _____

_____

(c) CORPORATION

Name of corporation _____

(Address) _____

*(Sign here if corporation) _____ Title
*Signature of 1st officer of corporation

(Corporate seal to be affixed here) _____ Title
*Signature of 2nd officer of corporation

*Approved signature methods for corporations:

(a) Two signatures: One by the Chairman of the Board of Directors, President or any vice president and One by the Secretary, assistant secretary, chief financial officer or any assistant treasurer; or

(b) One signature by corporate designated individual together with the properly attested resolution of the Board of Directors authorizing the person to sign.

FORM R&P 201-5M-12-72(t-28-45)

AFFIDAVIT TO ACCOMPANY PROPOSALS OR BIDS

I _____, being first duly sworn, depose and say that I am
(Insert name)

_____,
(Insert "sole owner," "a partner," "president," "secretary," or other proper title)

Of _____
(Insert name of bidder)

who submits herewith to the Department of Recreation and Parks the attached proposal and hereby declare:

(1) That I am the person who signed the hereto attached proposal; that said proposal is genuine; that the same is not sham or collusive; that all statements of fact therein are true; that such proposal was not made in the interest or behalf of any person, partnership, company, association, organization or corporation not therein named or disclosed.

(2) That the bidder has not directly or indirectly by agreement, communication or conference with anyone attempted to induce action prejudicial to the interest of the public body which is to award the contract, or of any other bidder, or anyone else interested in the proposed contract; that the bidder has not in any manner sought by collusion to secure for himself, itself, themselves, an advantage over any other bidder.

(3) That prior to the public opening and reading of bids the said bidder:

(a) did not, directly or indirectly, induce or solicit anyone else to submit a false or sham bid.

(b) did not, directly or indirectly, collude, conspire, connive or agree with anyone else that said bidder or anyone else would submit a false or sham bid, or that anyone should refrain from bidding or withdraw its bid;

(c) did not, in any manner, directly or indirectly, seek by agreement, communication or conference with anyone to raise or fix the bid price of said bidder or of anyone else, or to raise or fix any overhead, profit or cost element of its/ their price or of that of anyone else;

(d) did not, directly or indirectly, submit its/ their bid price or any breakdown thereof, or the contents thereof, or divulge information or data relative thereto, to any corporation, partnership, company, association, organization, bid depository, or to any member or agent thereof, or to any individual or group of individuals, except to the awarding authority or to any person or persons who have a partnership or other financial interest with said bidder in its/ their business.

ADDENDA - This proposal is submitted with respect to the changes to the contract included in Addenda numbers:

(Fill in Addenda received) _____, _____, _____, _____, _____, _____, _____.

A bid may be found non-responsive if the bidder fails to acknowledge all Bid Addenda issued as posted on LABAVN for this project.

I certify or declare under penalty of perjury that the foregoing is true and correct.

Signed: _____
(Title)

Subscribed and sworn before me

this _____ day of _____, 20__
(Seal of Notary)

_____
Notary Public

WARNING
BIDS WILL NOT BE CONSIDERED UNLESS THE AFFIDAVIT HEREON IS FULLY EXECUTED, INCLUDING THE CERTIFICATE OF THE NOTARY AND THE NOTARIAL SEAL.

B I D B O N D

(10% of aggregate amount of bid)
(Not required if certified check accompanies the bid)

KNOW ALL MEN BY THESE PRESENTS: That we, _____

_____

as principal, and _____

_____

as surety, are held and firmly bound unto the City of Los Angeles, State of California, in the sum of ten per cent of the aggregate amount of bid for the payment whereof we hereby bind ourselves, our successors, heirs executors, and administrators, jointly and severally, firmly by these presents.

The condition of the foregoing obligation is such that, whereas the above bounden principal is about to submit to the Board of Recreation and Park Commissioners of the City of Los Angeles a bid or proposal for the performance of the work therein mentioned, in compliance with the plans and specifications therefore, pursuant to published notice inviting bids;

Now, if the bid or proposal of the principal is accepted and the work awarded to the principal by said Board of Recreation and Park Commissioners, and if the principal shall fail or neglect to enter into a contract therefore in accordance with the provisions of said bid or proposal and the accompanying Instructions to Bidders, and to execute faithful performance and labor and material surety bonds to the satisfaction of the Board of Recreation and Park Commissioners of said City; then the sum guaranteed by this bond is forfeited to the City of Los Angeles.

It is expressly agreed and understood that any errors, clerical, mathematical, or otherwise, in the bid or proposal shall not be or constitute a defense to forfeiture under this bond.

WITNESS our hands and seals this _____ day of _____A.D., 20____

(Seal) _____
Principal

By _____
Title

(Seal) _____
Surety

By _____
Title

Signature of ATTORNEY-IN-FACT must be notarized.

CONTRACTOR MUST USE THIS FORM

I M P O R T A N T

CONTRACTOR GOVERNMENTAL PROJECT REFERENCE SHEET

All contractors bidding on projects for the City of Los Angeles, Department of Recreation and Parks, who have not been awarded a project with the Department within the last three (3) years, are required to complete the following reference information. This information will be reviewed as part of the bid package for determining the successful contractor.

List all project in chronological order from the most recent project, even if not completed, going back at least three years. Make sure to include all projects involving local, county, state and federal agencies.

Name of Project _____

Location of Project _____

Amount of Contract _____ Duration in Months _____

Awarding Agency _____

Awarding Agency Address _____

Awarding Agency Phone Number (Include Area Code) _____

Awarding Agency Project Liaison _____

Project Liaison Phone Number (Include Area Code) _____

Name of Project _____

Location of Project _____

Amount of Contract _____ Duration in Months _____

Awarding Agency _____

Awarding Agency Address _____

Awarding Agency Phone Number (Include Area Code) _____

Awarding Agency Project Liaison _____

Project Liaison Phone Number (Include Area Code) _____

Name of Project _____

Location of Project _____

Amount of Contract _____ Duration in Months _____

Awarding Agency _____

Awarding Agency Address _____

Awarding Agency Phone Number (Include Area Code) _____

Awarding Agency Project Liaison _____

Project Liaison Phone Number (Include Area Code) _____

Name of Project _____

Location of Project _____

Amount of Contract _____ Duration in Months _____

Awarding Agency _____

Awarding Agency Address _____

Awarding Agency Phone Number (Include Area Code) _____

Awarding Agency Project Liaison _____

Project Liaison Phone Number (Include Area Code) _____

Name of Project _____
Location of Project _____
Amount of Contract _____ Duration in Months _____
Awarding Agency _____
Awarding Agency Address _____
Awarding Agency Phone Number (Include Area Code) _____
Awarding Agency Project Liaison _____
Project Liaison Phone Number (Include Area Code) _____

Name of Project _____
Location of Project _____
Amount of Contract _____ Duration in Months _____
Awarding Agency _____
Awarding Agency Address _____
Awarding Agency Phone Number (Include Area Code) _____
Awarding Agency Project Liaison _____
Project Liaison Phone Number (Include Area Code) _____

Name of Project _____
Location of Project _____
Amount of Contract _____ Duration in Months _____
Awarding Agency _____
Awarding Agency Address _____
Awarding Agency Phone Number (Include Area Code) _____
Awarding Agency Project Liaison _____
Project Liaison Phone Number (Include Area Code) _____

Name of Project _____
Location of Project _____
Amount of Contract _____ Duration in Months _____
Awarding Agency _____
Awarding Agency Address _____
Awarding Agency Phone Number (Include Area Code) _____
Awarding Agency Project Liaison _____
Project Liaison Phone Number (Include Area Code) _____

Name of Project _____
Location of Project _____
Amount of Contract _____ Duration in Months _____
Awarding Agency _____
Awarding Agency Address _____
Awarding Agency Phone Number (Include Area Code) _____
Awarding Agency Project Liaison _____
Project Liaison Phone Number (Include Area Code) _____

N O T I C E

NOTICE TO PROSPECTIVE CONTRACTORS PERTAINING TO NON- DISCRIMINATION IN EMPLOYMENT AND PREVAILING WAGE RATES

The California Labor Code requires that prevailing wages must be paid on all City of Los Angeles public works projects. All personnel employed in actual construction on this project must be paid at least the prevailing wage for the craft they are working in. Current prevailing wage rates may be obtained by contacting the Office of Contract Compliance at (213) 847-1922. Information on prevailing wages can also be obtained from the California Department of Industrial Relation's website at http://www.dir.ca.gov/DLSR/PWD

NOTICE TO PROSPECTIVE CONTRACTORS PERTAINING TO
NON-DISCRIMINATION IN EMPLOYMENT AND PREVAILING WAGE RATES

A. In contractual proceedings where a notice inviting proposals for the work, services, information, or property required to be furnished or supplied to the City or to be sold to the City is published either in accordance with Sections 371 of the Charter of said City or is otherwise published, such notice shall specify that the provisions of Los Angeles Administrative Code Section 10.8 through 10.8.6 hereof applicable to any such notice will be part of any contract awarded by the City pursuant to such notice.

B. In contractual proceedings where a notice is not published as provided in subsection A, the contractor or contractors will be advised at the outset of negotiations that the provisions of subsection 10.8 through 10.8.6 hereof will be a part of any contract entered into by the City as a result of such negotiations.

NONDISCRIMINATION CLAUSE -- Required in All Contracts

The contractor agrees and obligates itself not to discriminate during the performance of this contract against any employee or applicant for employment because of the employee's or applicant's race, religion, national origin, ancestry, sex, sexual orientation, age, disability, marital status, domestic partner status, or medical condition. All subcontracts awarded under this contract shall contain a like nondiscrimination clause.

PREVAILING WAGE RATES

The California Labor Code requires that prevailing wages must be paid on all City of Los Angeles public works projects. All personnel employed in actual construction on this project must be paid at least the prevailing wage for the craft they are working in. Current prevailing wage rates may be obtained by contacting the City of Los Angeles Office of Contract Compliance at (213) 847-1922, (213) 847-2777 (fax). Information on prevailing wages can also be obtained from the California Department of Industrial Relation's website at http://www.dir.ca.gov/DLSR/PWD.

Pursuant to the provisions of the Labor Code of the State of California the general prevailing rate of wages for each craft, classification or type of workman needed in the execution of contracts under the jurisdiction of the Board of Recreation and Park Commissioners, shall be those rates as determined by the Director of the Department of Industrial Relations of the State of California. Copies of the applicable Determinations by the said Director are on file in the said office of the said Board and are hereby incorporated and made a part hereof the same as though fully set forth herein. Copies of the said Determination may be obtained at or by request to the said office of said Board.

In the event that the wage determination decision of the Director of Industrial Relations has been superseded by any subsequent wage determination decision(s) published up to and including 10 days prior to bid opening, the most recent applicable wage decisions shall be incorporated by reference, and the successful bidder agrees to be bound by it regardless of what is contained in the specifications.

_____
Contractor or Company Name

_____ _____
By (Signature) Date

Ordinance No. 175115

An ordinance amending Section 10.8.2.1 of the Los Angeles Administrative Cod in it's entirely to clarify the requirement that City Contractors shall not discriminate in the provision of employee benefits between employees with spouses and employees with domestic partners.

THE PEOPLE OF THE CITY OF LOS ANGELES
DO ORDAIN AS FOLLOWS:

Section 1, Section 10.8.2.1 of the Los Angeles Administrative Code is amended to read:

Sec. 10.8.2.1. Equal Benefits Ordinance

(A) Legislative Findings.

The City awards many contracts to private firms to provide services to the public and to City Government. Many City contractors and subcontractors perform services that affect the proprietary interests of City government in that their performance impacts the success of City operations. The City holds a proprietary interest in the work performed by many employees employed by City contractors and subcontractors. In a very real sense, the success or failure of City operations may turn on the success or failure of these enterprises, for the City has a genuine stake in how the public perceives the services rendered for them by such businesses.

Discrimination in the provision of employee benefits between employees with domestic partners and employees with spouses results in unequal pay for equal work. Los Angeles law prohibits discrimination based on marital status and/or sexual orientation. The City's departments and contracting agents are required to place in all City contracts a provision that the company choosing to do business with the City agrees to comply with the City's nondiscrimination laws.

It is the City's intent, through the contracting practices outlined in this Ordinance, to assure that those companies choosing to do business with the City will equalize the total compensation between similarly situated employees with spouses and with domestic partners. The provisions of this Ordinance are designed to insure that the City's contractors will maintain a competitive advantage in recruiting and retaining capable employees, thereby improving the quality of the goods and services the City and its people receive, and insuring protection of the City's property.

(B) Definitions. For purposes of Equal Benefits Ordinance only, the following shall apply.

1. Awarding Authority means any Board or Commission of the City, or any employee or officer of the City, that is authorized to award or enter into any Contract, as defined in this ordinance, on behalf of the City, and shall include departments having control of their own funds and which adopt policies consonant with the provisions of the Equal Benefits Ordinance.
2. Benefits means any plan, program or policy provided or offered by a Contractor to its employees as part of the employer's total compensation package. This includes but is not limited to the following types of benefits: bereavement leave, family medical leave, health benefits, membership or membership discounts, moving expenses, pension and retirement benefits, and travel benefits
3. Cash Equivalent means the amount of money paid to an employee with a Domestic Partner (or spouse, if applicable) in lieu of providing Benefits to the employee's Domestic Partner (or spouse, if applicable). The Cash Equivalent is equal to the direct expense to the employer of providing Benefits to an employee for his or her Domestic Partner (or spouse, if applicable) or the direct expense to the employer of providing Benefits for the dependents and family member of an employee with a Domestic Partner (or spouse, if applicable).
4 City means City of Los Angeles
5. Contract means an agreement the value of which exceeds $5,000.00. It includes agreements for work or services to or for the City, for public works or improvements to be performed, agreements for the purchase of goods, equipment, materials, or supplies, or grants to be provided, at the expense of the City or to be paid out of monies under the control of the City. The term also includes a Lease or License, as defined in the Equal Benefits Ordinance.
6. Contractor means any person or persons, firm, partnership, corporation, joint venture, or any combination of these, or any governmental entity acting in its proprietary capacity that enters into a Contract with any Awarding Authority of the City. The term does not include Subcontractors.
7. Designated Administrative Agency (DAA) means the Office of Contract Compliance.

8. Domestic Partner means any two adults, of the same or different sex, who have registered as domestic partners with a governmental entity pursuant to state or local law authorizing this registration or with an internal registry maintained by the employer of at least one of the domestic partners.
9. Equal Benefits Ordinance means Los Angeles Administrative Code 10.8.2.1 et seq., as amended from time to time.
10. Equal Benefits means the equality of benefits between employees with spouses and employees with Domestic Partners, between spouses of employee and Domestic Partners of employees, and between dependents and family members of spouses and dependents and family members of Domestic Partners.
11. Lease or License means any agreement allowing others to use property owned or controlled by the City, any agreement allowing others the use of City property owned or controlled by the City, any agreement allowing others the use of City property in order to provide services to or for the City, such as for concession agreements and any agreement allowing the Cit to use property owned or controlled by others
12. Subcontractor means any person or person, firm, Partnership Corporation, joint venture, or any combination of these, and any governmental entity, that assists the Contractor in performing or fulfilling their terms of the Contract. Subcontractors are not subject to the requirements of the Equal Benefits Ordinance unless they otherwise have a Contract directly with the City.

(C) Equal Benefits Retirements.

1. No awarding authority of the City, shall execute or amend any contract with any contractor that discriminates in the provision of Benefits between employees with spouses and employees with Domestic Partners, between spouses of employees and Domestic Partners of employees, and between dependents and family members of spouses and dependents and family members of Domestic Partners.
2. Contractor must permit access to, and upon request, must provide certified copies of all of its records pertaining to its Benefits policies and its employment policies and practices to the DAA, for the purpose of investigation or to ascertain compliance with the Equal Benefits Ordinance.
3. A Contractor must post a copy of the following statement in conspicuous places at its place of business available to employees and applicants for employment: "During the performance of a Contract with the City of Los Angeles, the Contractor will provide equal benefits to its employees with spouses and its employees with domestic partners." The posted statement must also include a City contact telephone number which will be provided each Contractor when the Contract is executed.
4. A Contractor must not set up or use its contracting entity for the purpose of evading the requirements imposed by the Equal Benefits Ordinance.

(D) Other options for compliance. Provided that the Contractor does not discriminate in the provision of Benefits, a Contractor may also comply with the Equal Benefits Ordinance in the following ways:

1. A Contractor may provide an employee with the Cash Equivalent only if the DAA determines that either:
    a. The Contractor has made a reasonable, yet unsuccessful effort to provide Equal Benefits; or
    b. Under the circumstances, it would be unreasonable to require the Contractor to provide Benefits to the Domestic Partner (or spouse, if applicable).
2. Allow each employee to designate a legally domiciled member of the employee's household a being eligible for spousal equivalent Benefits.
3. Provide Benefits neither to employees' spouses nor to employees' Domestic Partners.

(E) Applicability.

1. Unless otherwise exempt, a Contractor is subject to and shall comply with all applicable provisions of the Equal Benefits Ordinance.
2. The requirements for the Equal Benefits Ordinance shall apply to a Contractor's operations as follows:
    a. A Contractor's operations located within the City limits, regardless of whether there are employees at those locations performing work in the Contract.
    b. A Contractor's operations on real property located outside of the City limits if the property is owned by the City has a right to occupy the property, and if the Contractor's presence at or on the property is connected to a Contract with the City.

c. The Contractor's employees located elsewhere in the United States but outside of the City limits if those employees are performing work on the City Contract.

3. The requirements of the Equal Benefits Ordinance do not apply to collective bargaining agreements ("CBA") in effect prior to January 1, 2000. The Contractor must agree to propose to its union that the requirements of the Equal Benefit Ordinance be incorporated into its CBA upon amendment, extension, or other modification of a CBA occurring after January 1, 2000.

(F) Mandatory Contract Provisions Pertaining to Equal Benefits. Unless otherwise exempted, every Contract shall contain language that obligates the Contractor to comply with the applicable provisions of the Equal Benefits Ordinance. The language shall include provisions for the following:

1. During the performance of the Contract, the Contractor certifies and represents that the Contractor will comply with the Equal Benefits Ordinance.
2. The failure of the Contractor comply with the Equal Benefits Ordinance will be deemed to be a material breach of the Contract by the Awarding Authority.
3. If the Contractor fails to comply with the Equal Benefits Ordinance the Awarding Authority may cancel, terminate or suspend the Contract, in whole or in part, and all monies due or to become due under the Contract may be retained by the City. The City may also pursue any and all other remedies at law or in equity for any breach.
4. Failure to comply with the Equal Benefits Ordinance may be used as evidence against the Contractor in actions taken pursuant to the provisions of Los Angeles Administrative Code Section 10.40, et seq., Contractor Responsibility Ordinance.
5. If the DAA determines that a Contractor has set up or used its Contracting entity for the purpose of evading the intent of the Equal Benefits Ordinance, the Awarding Authority may terminate the Contract on behalf of the City. Violation of this provision may be used as evidence against the Contractor in actions taken pursuant to the provisions of Los Angeles Administrative Code Section 10.40, et seq., Contractor Responsibility Ordinance.

(G) Administration

1. The DAA is responsible for the enforcement of the Equal Benefits Ordinance for all City Contracts. Each Awarding authority shall cooperate to the fullest extent with the DAA in its enforcement activities.
2. In enforcing the requirements of the Equal Benefits Ordinance, the DAA may monitor, inspect, and investigate to insure that the Contractor is acting in compliance with the Equal Benefits Ordinance.
3. The DAA shall promulgate rules and regulations and forms for the implementation of the Equal Benefits Ordinance. No other rules, regulations or forms may be used by an Awarding Authority of the City to accomplish this contract compliance program.

(H) Enforcement

1. If the contractor fails to comply with the Equal Benefits Ordinance:
   a. The failure to comply may be deemed to be a material breach of the contract by the Awarding Authority; or
   b. The Awarding Authority may cancel, terminate or suspend, in whole or in part, the contract; or
   c. Monies due or to become due under the Contract may be retained by the City until compliance is achieved;
   d. The City may also pursue any and all other remedies at law or in equity for any breach.
   e. The City may use failure to comply with the Equal Benefits Ordinance as evidence against the Contractor in actions taken pursuant to the provisions of Los Angeles Administrative Code Section 10.40, et seq., Contractor Responsibility Ordinance.

(I.) Non-applicability, exceptions and Waivers.

1. Upon request of the Awarding Authority, the DAA may waive compliance with the Equal Benefits Ordinance under the following circumstances:
   a. The Contract is for the use of City property, and there is only one prospective Contractor willing to enter in the Contract; or
   b. The Contract is for needed goods, services, construction of a public work or improvement, or interest in or right to use real property that is available only from a single prospective Contractor, and that prospective contractor is otherwise qualified and acceptable to the City; or

c. The Contract is necessary to respond to an emergency that endangers the public health or safety, and no entity which complies with the requirements of the Equal Benefits Ordinance capable of responding to the emergency is immediately available; or

d. The City Attorney certifies in writing that the Contract involves specialized litigation requirements such that it would be in the best interests of the City to waive the requirements of the Equal Benefits Ordinance; or

e. The Contract is (i) with a public entity; (ii) for goods, services construction of a public work or improvement, or interest in or right to use real property; and (iii) that is either not available from another source, or is necessary to service a substantial public interest. A Contract for interest in or the right to use real property shall not be considered as not being available from another source unless there is no other site of comparable quality or accessibility available from another source; or

f. The requirements of the Equal Benefits Ordinance will violate or are inconsistent with the terms or conditions of a grant, subvention or agreement with a public agency or the instructions of an authorized representative of the agency with respect to the grant, subvention or agreement, provided that the Awarding Authority has made a good faith attempt to change the terms or conditions of the grant, subvention or agreement to authorize application of the Equal Benefits Ordinance; or

g. The contract is for goods, a service or a project that is essential to the City or city residents and there are no qualified responsive bidders or prospective Contractors who could be certified as being in compliance with the requirements of the Equal Benefits Ordinance; or

h. The contract involves bulk purchasing arrangements through City, Federal, State, or Regional entities that actually reduce the City's purchasing costs and would be in the best interests of the city.

2. The Equal Benefit Ordinance does not apply to contracts which involve:

a. The investment of trust monies, bond proceed or agreements relating to the management of these funds, indentures, security enhancement agreements (including, but not limited to, liquidity agreements, letters of credit, bond insurance) for City tax-exempt and taxable financing, deposits of City's surplus funds in financial institutions, the investment of City monies in competitively bid investment agreements, the investment of City monies in securities permitted under the California State government Code and/or the City's investment policy, investment agreements, repurchase agreements, City monies invested in U.S. government securities or pre-existing investment agreements;

b. Contracts involving City monies in which the Treasurer or the City Administrative Officer finds that either:

(i) No person, entity or financial institution doing business in the City, which is in compliance with the Equal Benefits Ordinance, is capable of performing the desired transaction(s); or

(ii) The City will incur a financial loss or forego a financial benefit which in the opinion of the Treasure or City Administrative Officer would violate his or her fiduciary duties.

3. The Equal Benefits Ordinance does not apply to contracts for gifts to the City.

4. Nothing in this subsection shall limit the right of the City to waive the provisions of the Equal Benefits Ordinance.

5. The provisions of this Subsection shall apply to the Equal Benefits Ordinance only. The Equal Benefits Ordinance is not subject to the exemptions provided in Section 10.9 of this Code.

(J.) Consistency with Federal or State Law. The provisions of the Equal Benefits Ordinance do not apply where the applications of these provisions would violate or be inconsistent with the laws. Rules or regulations federal or state law, or where the application word violate or be inconsistent with the terms or conditions of a grant or contract with the United State of America, the State of California, or the instruction of an authorized representative of any of these agencies with respect to any grant or contract.

(K) Severability. If any provision of the Equal Benefits Ordinance is declared legally invalid by any court of competent jurisdiction, the remaining provisions shall remain in full force and effect.

(L.) Timing of Application

1. The requirements of the Equal Benefits Ordinance shall not apply to Contracts executed or amended prior to January 1, 2000, or to bid packages advertised and made available to the public, or any bids received by the City, prior to January 1, 2000 and would otherwise be subject to the Equal Benefits Ordinance.

2. The requirements of the Equal Benefits Ordinance shall apply to competitively bid Contracts that are amended after April 1, 2003, and to competitively bid Contracts that result from bid packages advertised and made available to the public after May 1, 2003.

3. Unless otherwise exempt, the Equal Benefits Ordinance applies to any agreement executed or amended after January 1, 2000, that meets the definition of a Contract as defined within Subsection 10.8.2.1(b).

   "Domestic Partners" means, for the purposes of this Article, any two adults, of the same or different sex, who have registered with a governmental entity pursuant to state or local law authorizing this registration or with a internal registry maintained by an employer of at least one of the domestic partners.

Sec. 3, The City Clerk shall certify to the passage of this ordinance and have it published in accordance with Council policy, either in a daily newspaper circulated in the City of Los Angeles or by posting for ten days in three public places in the City of Los Angeles: one copy on the bulletin board located in the Main Street lobby to the City Hall; one copy on the bulletin board located at the ground level at the Los Angeles Street entrance to the Los Angeles Police Department; and one copy on the bulletin board located at the Temple Street entrance to the Los Angeles County Hall of Records.

I hereby certify that this ordinance was passed by the Council of the City of Los Angeles, at its meeting of FEB 12, 2003

J. MICHAEL CAREY, City Clerk

By Signed by Deputy
Deputy

Approved Feb 28, 2003

BY Signed by City of Los Angeles Mayor
Mayor

Approved as to Form and Legality

ROCKARD J. DELGADILLO, City Attorney

BY Signed by Laurel L. Lightner
LAUREL L. LIGHTNER
Deputy City Attorney

File No. 99-0908-S3
83745

Equal Benefits Ordinance (EBO) / First Source Hiring Ordinance (FSHO)

If a contract is subject to the Equal Benefits Ordinance (EBO) and/or the First Source Hiring Ordinance (FSHO), Bidders/Proposers are required to complete a streamlined EBO/FSHO Compliance Affidavit web application form that is located on the City of Los Angeles' Business Assistance Virtual Network (BAVN) at www.labavn.org. Bidders/Proposers are responsible for creating a BAVN profile and completing and submitting the affidavit. See below for additional details about the EBO and the FSHO.

Equal Benefits Ordinance (EBO):

Bidders/Proposers are advised that any contract awarded pursuant to this procurement process shall be subject to the applicable provisions of Los Angeles Administrative Code Section 10.8.2.1, Equal Benefits Ordinance (EBO).

All Bidders/Proposers shall complete and submit the Equal Benefits Ordinance Compliance Affidavit, available on the City of Los Angeles' Business Assistance Virtual Network (BAVN) residing at www.labavn.org, prior to award of a City contract that exceeds $25,000. The affidavit shall be valid for a period of three years from the date it is first uploaded onto the City's BAVN. Bidders/Proposers do not need to submit supporting documentation with their bids or proposals. However, the City may request supporting documentation to verify that the benefits are provided equally as specified on the EBO Affidavit.

Bidders/Proposers seeking additional information regarding the requirements of the Equal Benefits Ordinance may visit the Bureau of Contract Administration's web site at http://bca.lacity.org.

First Source Hiring Ordinance (FSHO):

Unless approved for an exemption, contractors under contracts primarily for the furnishing of services to or for the City, the value of which exceeds $25,000 with a term of at least three (3) months, and certain recipients of City Loans or Grants, shall comply with the provisions of Los Angeles Administrative Code Sections 10.44 et seq., First Source Hiring Ordinance (FSHO).

All Bidders/Proposers shall complete and electronically sign the FSHO Compliance Affidavit available on the City of Los Angeles' Business Assistance Virtual Network (BAVN) residing at www.labavn.org prior to award of a City contract. The affidavit shall be valid for a period of three years from the date it is first uploaded on the City's BAVN.

Bidders/Proposers seeking additional information regarding the requirements of the First Source Hiring Ordinance may visit the Bureau of Contract Administration's web site at http://bca.lacity.org.

Nondiscrimination, Equal Employment Practices and Affirmative Action Program (Non-Construction and Construction)

Bidders/Proposers are advised that any contract awarded pursuant to this procurement process shall be subject to the applicable provisions of Los Angeles Administrative Code Section 10.8.2., Non-discrimination Clause.

All contracts (both construction and non-construction) for which the consideration is $1,000 or more shall comply with the provisions of Los Angeles Administrative Code Sections 10.8.3., Equal Employment Practices Provisions. By affixing its signature on a contract that is subject to the Equal Employment Practices Provisions, the Contractor shall agree to adhere to the provisions in the Equal Employment Practices Provisions for the duration of the contract.

All contracts (both construction and non-construction) for which the consideration is $25,000 or more shall comply with the provisions of Los Angeles Administrative Code Sections 10.8.4., Affirmative Action Program Provisions. By affixing its signature on a contract that is subject to the Affirmative Action Program Provisions, the Contractor shall agree to adhere to the provisions in the Affirmative Action Program Provisions for the duration of the contract.

Furthermore, contractors shall include similar provisions in all subcontracts awarded for work to be performed under the contract with the City and shall impose the same obligations. The contract with the subcontractor that contends similar language shall be made available to the Office of Contract Compliance upon request.

Bidders/Proposers seeking additional information regarding the requirements of the City's Non-Discrimination Clause, Equal Employment Practices and Affirmative Action Program may visit the Bureau of Contract Administration's web site at http://bca.lacity.org.

ANTICIPATED EMPLOYMENT UTILIZATION REPORT

☐PRIME ☐SUB **Contractor**		**Project Title**		**OCC File #**	
Contractor Address		**City:**	**State:**	**E-mail:**	

CONSTRUCTION PROJECTS FOR WHICH THE CONSIDERATION IS $25,000 OR MORE

As part of the Affirmative Action Program Provisions (10.13B), the Awarding Authority or the Designated Administrative Agency may request that your company set forth anticipated minority, women, and all other staffing utilization by the contractor and all subcontractors on each project constructed by the City. Complete this form and use those trades within the area of jurisdiction of the Los Angeles Building and Construction Trades Council within the City of Los Angeles in each work class and at all levels in terms of STAFF HOURS. Submit this form directly to the Requesting Party.

(Note: J - Journeyman, A - Apprentice, T - Trainee, F - Female, M - Male) **(L.A. County Only)**

	AFRICAN AMERICAN (BLACK)			HISPANIC			ASIAN / PACIFIC ISLANDER			AMERICAN INDIAN/ ALASKAN NATIVE			CAUCASIAN (NON-HISPANIC)			TOTAL EMPLOYEES			% MINORITY			GENDER	
CRAFT	**J**	**A**	**T**	**J**	**A**	**T**	**J**	**A**	**T**	**J**	**A**	**T**	**J**	**A**	**T**	**J**	**A**	**T**	**J**	**A**	**T**	**M**	**F**
Brick Mason																							
Carpenters																							
Concrete Finishers																							
Construction Laborers																							
Electricians																							
Operator Engineers																							
Painters																							
Plasterers, Stucco Masons																							
Plumbers, Pipefitters																							
Sheet Metal Workers																							
Iron & Steel Workers																							
Roofers																							
Clerical																							
Supervisory																							
TOTAL																							

Employment statistics were obtained from:

☐ **Available Records** ☐ **Visual Check** ☐ **Other (Specify)** _____

Prepared by: _____ **Title:** _____ **Date:** _____

EXCERPTS FROM THE CALIFORNIA LABOR CODE
RELATING TO APPRENTICES ON PUBLIC WORKS
Chapter 4 of Division 3
THE SHELLY-MALONEY APPRENTICE LABOR STANDARDS ACT OF 1939
(Note: Boldface type denotes key points)

3098. An awarding agency whose public works contract falls within the jurisdiction of Section 1777.5 shall, within five days of the award, send a copy of the award to the Division of Apprenticeship Standards. When specifically requested by a local joint apprenticeship committee, the division shall notify the local joint apprenticeship committee regarding all such awards applicable to the joint apprenticeship committee making the request. Within five days of a finding of any discrepancy regarding the ratio of apprentices to journeymen, pursuant to the certificated fixed number of apprentices to journeymen, the awarding agency shall notify the Division of Apprenticeship Standards.

(Amended by Stats. 1974, Ch. 1095.)

Chapter 1 of Division 2
APPRENTICES ON PUBLIC WORKS

1776. Each contractor and subcontractor shall keep an accurate payroll record, showing the name, address, social security number, work classification, straight time and overtime hours worked each day and week, and the actual per diem wages paid to each journeyman, apprentice or worker employed by him in connection with the public work. The contractor's and subcontractor's payroll records shall be available for inspection at all reasonable hours, and a copy shall be made available to the employee or its authorized representative, the Division of Labor Standards Enforcement, and the division of Apprenticeship Standards. The body awarding the contract may charge a reasonable fee for copying such records. The body awarding the contract shall be required to retain the records filed pursuant to this section for 90 days after completion of the contract. After a complaint has been filed with the awarding body or the Division of Labor Standards Enforcement alleging that a contractor or subcontractor has paid less than the prevailing wage on a public works project, the contractor or subcontractor has paid less than the prevailing wage on a public works project, the contractor or subcontractor shall upon written notice from either the awarding body or the Division of Labor Standards Enforcement within 10 days file with the body awarding the contract a certified copy of the payroll records.
(Amended by Stats. 1976, Ch. 599.)

1777.5 Nothing in this chapter shall prevent the employment of property registered apprentices upon public works.

Every such apprentice shall be paid the standard wage paid to apprentices under the regulations of the craft or trade at which he is employed, and shall be employed only at the work of the craft or trade to which he is registered.

Only apprentices, as defined in Section 3077, who are in training under apprenticeship standards and written apprentice agreements under Chapter 4 (commencing at Section 3070), Division 3, of the Labor Code, are eligible to be employed on public works. The employment and training of each apprentice shall be in accordance with the provisions of the apprenticeship standards and apprentice agreements under which he is training.

When the contractor to whom the contract is awarded by the state or any political subdivision, or any subcontractor under him, in performing any of the work under the contract or subcontract, employs workmen in any apprenticeable craft or trade, the contractor and subcontractor shall apply to the joint apprenticeship committee administering the apprenticeship standards of the craft or trade in the area of the site of the public work for a certificate approving the contractor or subcontractor under the apprenticeship standards for the employment and training of apprentices in the area or industry affected; provided, however, that the approval as established by the joint apprenticeship committee or committees shall be subject to the approval of the Administrator of Apprenticeship. The joint apprenticeship committee or committees, subsequent to approving the subject contractor or subcontractor, shall arrange for the dispatch of apprentices to the contractor or subcontractor in order to comply with this section. There shall be an affirmative duty upon the joint apprenticeship committee or committees administering the apprenticeship standards of the craft or trade in the area of the site of the public work to ensure equal employment and affirmative action in apprenticeship committees provided they are already covered by the local apprenticeship standards. The ratio of apprentices to journeymen who shall be employed in the craft or trade on the public work may be the ratio stipulated in the apprenticeship standards under which the joint apprenticeship committee operates but in no case shall the ratio be less than one apprentice for each five journeymen, except as otherwise provided in this section.

The contractor or subcontractor, if he is covered by this section, upon the issuance of the approval certificate, or if he has been previously approved in such craft or trade, shall employ the number of apprentices or the ratio of apprentices to journeymen stipulated in the apprenticeship standards. Upon proper showing by the contractor that he employs apprentices in such craft or trade in the state on all of its contracts on an annual average of not less than one apprentice to each five journeymen, the Division of Apprenticeship Standards may grant a certificate exempting the contractor from the 1-to-5 ratio as set forth in this section. This section shall not apply to contracts of general contractors involving less than thirty thousand dollars ($30,000) or 20 working days or to contracts of specialty contractors not bidding for work through a general or prime contractor, involving less than two thousand dollars ($2,000) or fewer than five working days.

"Apprenticeable craft or trade," as used in this section, shall mean a craft or trade determined as an apprenticeable occupation in accordance with rules and regulations prescribed by the Apprenticeship Council. The joint apprenticeship committee shall have discretion to grant a certificate, which shall be subject to the approval of the Administrator of Apprenticeship, exempting a contractor from the 1-to-5 ratio set forth in this section when it finds that any one of the following conditions is met:

(a) In the event unemployment for the previous three-month period in such area exceeds an average of 15 percent, or
(b) In the event the number of apprentices in training in such area exceeds a ratio of 1 to 5, or
(c) If there is a showing that the apprenticeable craft or trade is replacing at least one-thirtieth of its journey annually through apprenticeship training, either (1) on a statewide basis, or (2) on a local basis.
(d) If assignment of an apprentice to any work performed under a public works contract would create a condition which would jeopardize its life or the life, safety, or property of fellow employees or the public at large or if the specific task to which the apprentice is to be assigned is of such a nature that training cannot be provided by a journeyman.

When such exemptions are granted to an organization which represents contractors in a specific trade from the 1-to-5 ratio on a local or statewide basis the member contractors will not be required to submit individual applications for approval to local joint apprenticeship committees, provided they are already covered by the local apprenticeship standards.

A contractor to whom the contract is awarded, or any subcontractor under him, who, in performing any of the work under the contract, employs journeymen or apprentices in any apprenticeable craft or trade and who is not contributing to a fund or funds to administer and conduct the apprenticeship program in any such craft or trade in the area of the site of the public work, to which fund or funds other contractors in the area of the site of the public work are contributing, shall contribute to the fund and funds in each craft or trade in which he employs journeymen or apprentices on the public work in the same manner as the other contractors do, but where the trust fund administrators are unable to accept such funds, contractors not signatory to the trust agreement shall pay a like amount to the California Apprenticeship Council. The contractor or subcontractor may add the amount of such contributions in computing its bid for the contract. The Division of Labor Standards Enforcement is authorized to enforce the payment of such contributions to the funds as set forth in Section 227.

The body awarding the contract shall cause to be inserted in the contract stipulations to effectuate this section. Such stipulations shall fix the responsibility of compliance with this section for all apprenticeable occupations with the prime contractor.

All decisions of the joint apprenticeship committee under this section are subject to the provisions of Section 3081.
(Amended by Stats. 1976, Ch. 1179.)

1777.6 It shall be unlawful for an employer or a labor union to refuse to accept otherwise qualified employees as registered apprentices on any public works, on the ground of the race, religious creed, color, national origin, ancestry, sex, or age, except as provided in Section 3077, of such employee.
(Amended by Stats, Ch. 1179.)

1777.7 In the event a licensed contractor' willfully fails to comply with the provisions of Section 1777.5, such licensee shall be denied the right to bid on any public works contract for a period of one year from the date the determination of non-compliance is made by the Administrator of Apprenticeship and, notwithstanding the provisions of Section 1727, upon receipt of such a determination the awarding body shall withhold from contract progress payments then due or to become due the sum of five thousand dollars ($5,000). Any determination shall be issued after a full investigation, a fair and impartial hearing, and reasonable notice thereof in accordance with reasonable rules and procedures prescribed by the California Apprenticeship Council. Any funds withheld by the awarding body pursuant to this section shall be released to the contractor upon issuance of an order to that effect by the administrator, or upon completion of the contract.

The interpretation and enforcement of Sections 1777.5 and 1777.7 shall be in accordance with the rules and procedures of the California Apprenticeship Council. (Amended by Stats. 1976, Ch. 538.)

APPRENTICE UTILIZATION

Any contract awarded hereunder will require the contractor to comply with the provision of Labor Code, State of California, Section 1777.5, relating to apprentice employment and training; and that the prime contractor will assume full responsibility for compliance to said section for all apprenticeable occupations on the project period. Compliance with said Section 1777.5 of Labor Code is not required for public works contracts involving less than $30,000 or twenty working days.

Contractor or Company Name	By (Signature), Date

CITY OF LOS ANGELES BUSINESS INCLUSION PROGRAM (BIP) FOR A REQUEST FOR BIDS (RFB)

On 2/15/12 the Board of Recreation and Park Commissioners (hereinafter referred to as the "Board" or the "Awarding Authority") adopted the City of Los Angeles Business Inclusion Program (BIP) for Department request for bids or proposals as follows.

Performance of a BIP outreach to Minority Business Enterprises (MBE), Women Business Enterprises (WBE), Small Business Enterprises (SBE), Emerging Business Enterprises (EBE), Disabled Veteran Business Enterprises (DVBE), and Other Business Enterprises (OBE) subcontractors must be completed on the Business Assistance Virtual Network (BAVN), www.labavn.org.

All BIP outreach documentation must be submitted on the BAVN by 4:30 p.m. on the calendar day following the date bids are received by the Board.

Failure to submit the required documentation by 4:30 p.m. on the calendar day following the date bids are received by the Awarding Authority will render the bid non-responsive.

The Department of Recreation and Parks anticipated levels of

MBE Participation:	**18 %**
WBE Participation:	**4 %**
SBE Participation:	**25 %**
EBE Participation:	**8 %**
DVBE Participation:	**3 %**

NOTE: BIP outreach information and/or assistance may be obtained through Department of Public Works, BIP phone-line at (213) 847-0618. Technical assistance in using the BAVN may be obtained through the e-mail link on the BAVN's website.

TABLE OF CONTENTS

BOARD OF RECREATION AND PARK COMMISSIONERS BUSINESS INCLUSION OUTREACH

PROGRAM INTRODUCTION	PAGE
Cover	15
Table of Contents	15A
PARAGRAPH	
A. General	15B
B. MBE/WBE/SBE/EBE/DVBE/OBE Participation	15B
C. Definitions	15B-15E
D. BIP Outreach Documentation	15F-15J
E. Award of Contract	15K
F. Subcontractors	15K-15M
G. Subcontractor Substitution	15M-15P
H. Submittal Documents	15P
I. Sub-agreement Falsification	15P
J. Final Subcontracting Report Submittal	15P
FORMS	
Subcontractors / Subcontractor Substitutions Form	15Q
Final Subcontracting Report Form	15R

CITY OF LOS ANGELES BUSINESS INCLUSION PROGRAM (BIP) FOR USE ON CITY-FUNDED REQUEST FOR BIDS CONTRACTS

A. General

This project is subject to the City of Los Angeles, BIP outreach requirements which are to be followed by bidders on advertised Request for Bids. The City is committed to ensuring full and equitable participation by minority, women, small, emerging, disabled veteran, and other sub-bid or subcontracting businesses in the provision of all goods and services to the City on a contractual basis. The BIP is set forth herein. Bidders shall be fully informed concerning the requirements of this Program. Bidders are encouraged to use MBE/WBE/SBE/EBE/DVBE firms whenever there is a need to subcontract portions of the work. **Failure to comply with the City's BIP Outreach requirements will render the bid non-responsive.**

B. MBE/WBE/SBE/EBE/DVBE/OBE Participation

The BIP outreach policy requires the bidder to make an outreach in order to include sub-bid participation by MBEs, WBEs, SBEs, EBEs, DVBEs, and OBEs which is anticipated by the City to produce levels of participation **as stated on Page 1.**

C. Definitions

1. Minority or Women Business Enterprise (MBE or WBE): For the purpose of this program, means a business enterprise that meets both of the following criteria:

    a. A business that is at least 51 percent owned by one or more minority persons or women, in the case of any business whose stock is held, at least 51 percent of the stock is owned by one or more minority persons or women; and

    b. A business whose management and daily business operations are controlled by one or more minority persons or women.

2. Small Business Enterprise (SBE): For the purpose of this program, Small Business Enterprise shall mean a business enterprise that meets the following criteria:

    a. A business (personal or professional services, manufacturer, supplier, vendor) whose three (3) year average annual gross revenues does not exceed $7 million.

    b. A business (construction contractors) whose three (3) year average annual gross revenues does not exceed $14 million.

3. Emerging Business Enterprise (EBE): For the purpose of this program, Emerging Business Enterprise shall mean a business enterprise whose three (3) year average annual gross revenues do not exceed $3.5 million.

4. Disabled Veteran Business Enterprise (DVBE): For the purpose of this program, Disabled Veteran Business Enterprise shall mean a business enterprise that meets the following criteria:

    a. A business that is at least 51 percent owned by one or more disabled veterans.
    b. A business whose daily business operations must be managed and controlled by one or more disabled veteran

5. Other Business Enterprise (OBE): For the purpose of this program, means any business which does not otherwise qualify or has not been certified as a Minority, Women, Small, Emerging, and/or Disabled Veteran Business Enterprise.

6. Minority person: For the purposes of this program, the term "Minority person" means African Americans; Hispanic Americans; Native Americans (including American Indians, Eskimos, Aleuts, and Native Hawaiians); Asian Pacific Americans (including persons whose origins are from Japan, China, Taiwan, Korea, Vietnam, Laos, Cambodia, the Philippines, Samoa, Guam, the U.S. Trust Territories of the Pacific, and the Northern Marianas); and Subcontinent Asian Americans (including persons whose origins are from India, Pakistan and Bangladesh).

7. Disabled Veteran: For the purpose of this program, the term "Disabled Veteran" shall mean a veteran of the U.S. military, naval, or air services; the veteran must have a service-connected disability of at least 10% or more, and the veteran must reside in California.

8. Certifications must be current **on the date bids for the project are opened** if recognition is to be given towards MBE/WBE participation on this project.

   a. Certification as a Minority or Women Business Enterprise: An MBE/WBE must be certified by 1) City of Los Angeles, Bureau of Contract Administration; 2) State of California Department of Transportation (CalTrans); 3) Los Angeles County Metropolitan Transportation Authority (Metro); 4) Any certifying agency that is a part of the State of California, Unified Certification Program (CUCP) so long as the certification meets all of the City of Los Angeles' MBE/WBE certification requirements; or 5) Southern California Minority Business Development Council, Inc. (SCMBDC) for MBE certifications only.

      Applications for certification and directories of MBE/WBE certified firms are available at the following locations:

      1. City of Los Angeles

Office of Contract Compliance, 1149 S. Broadway, Suite 300, Los Angeles, CA 90015 Telephone: (213) 847-2684 Fax: (213) 847-2777
Internet address: http://bca.lacity.org

      2. CalTrans

State of California, Department of Transportation, Civil Rights Group, 1823 14th Street, Sacramento, CA 95814
Telephone: (916) 324-1700 To order a directory, call (916) 445-3520 Internet address: http://www.dot.ca.gov/hq/bep/

      3. Los Angeles County Metropolitan Transportation Authority

Equal Opportunity Department, 1 Gateway Plaza, Los Angeles, CA 90012 Telephone: (213) 922-2600 Fax: (213) 922-7660
Internet address: http://www.mta.net

      4. Southern California Minority Business Development Council, Inc. (for a fee) 800 W. 6th Street, Suite 850, Los Angeles, CA 90017
      Telephone: (213)689-6960 Fax: (213) 689-1707

Internet address: www.scmbdc.org

b. Certification as a Small or Emerging Business Enterprise: An SBE must be certified by either: 1) City of Los Angeles, Bureau of Contract Administration; or 2) State of California, Office of Small Business & Disabled Veterans Business Enterprise Services so long as the certification meets al of the City of Los Angeles' SBE and EBE certification criteria.

Note: The State of California does not offer EBE certifications. For the purposes of this program, the State's Microbusiness certification will be considered synonymous with the City's EBE certification.

c. Certification as a Disabled Veteran Business Enterprise: A DVBE must be certified by State of California, Office of Small Business & Disabled Veterans Business Enterprise Services.

9. Business Inclusion Program Outreach Documentation: The bidder must take affirmative steps prior to bid opening to ensure that a maximum effort is made to recruit sub-bidder/subcontractors. Minority, women, small, emerging, disabled veteran owned and controlled businesses must be considered along with other business enterprises whenever possible as sources of supplies, construction and other services. The required affirmative steps for BIP Outreach documentation are outlined in Paragraph D herein. The BIP Outreach documentation must be submitted as described in Paragraph D herein. Failure to submit the BIP Outreach documentation as described will render the response non-responsive.

10. Subcontract: For the purpose of this program, the term "Subcontract" denotes an agreement between the prime Contractor and an individual, firm or corporation for the performance of a particular portion(s) of the work which the prime Contractor has obligated itself.

11. Subcontractor: An individual, firm, or corporation having a direct contract with the contractor for the performance of a part of the work which is proposed to be constructed or done under

the contract or permit, including the furnishing of all labor, materials, or equipment.

12. Vendor and/or supplier: A firm that owns, operates or maintains a store, warehouse, or other establishment in which the materials or supplies required for the performance of the contract are bought, kept in stock, and regularly sold to the public in the usual course of business. The firm must engage in, as its principal business, and its own name, the purchase and sale of the products in question. A vendor and/or supplier of bulk items such as steel, cement, stone and petroleum products need not keep such products in stock, if it owns or operates distribution equipment.

13. Manufacturer: A firm that operates or maintains a factory or establishment that produces on the premises the materials or supplies obtained by the contractor.

14. Broker: A firm that charges for providing a bona fide service, such as professional, technical, consultant or managerial services and assistance in the procurement of essential personnel, facilities, equipment, insurance or bonds, materials or supplies required for performance of the contract. The fee or commission is to be reasonable and not excessive as compared with fees customarily allowed for similar services.

15. Participation Recognition: This applies to recognition as an MBE, WBE, SBE, EBE, DVBE, and OBE.

a. All listed MBE, WBE, SBE, EBE, and/or DVBE firms must be certified as defined under Paragraph C, Definitions, Item 8, on the date bids for the project are opened before credit may be allowed toward the respective MBE, WBE, SBE, EBE, and/or DVBE participation level.

b. Work performed by a MBE, WBE, SBE, EBE, and/or DVBE prime contractor will not be a consideration when determining a prime contractor's BIP Outreach. The prime contractor will be required to make a BIP Outreach to obtain certified MBEs, WBEs, SBEs, EBEs, and DVBEs through subcontracting or materials and supplies acquisition to reach anticipated participation levels.

c. A listed MBE, WBE, SBE, EBE, DVBE, and/or OBE firm must perform a commercially useful function, i.e., must be responsible for the execution of a distinct element of the work and must carry out its responsibility by actually performing, managing and supervising the work.

d. Recognition for materials and/or supplies is limited to 60 percent of the amount to be paid to the vendor for such materials/supplies in computing the levels of MBE, WBE, SBE, EBE, DVBE, and OBE participation, unless the vendor manufactures or substantially alters the materials/supplies.

e. MBE and/or WBE credit shall not be given to a Joint Venture partner listed as a subcontractor by a Joint Venture bidder.

f. MBE, WBE, SBE, EBE, and/or DVBE credit for brokers required for performance of the contract is limited to the reasonable fee or commission charged, as not considered excessive, as compared with fees customarily allowed for similar services.

g. A firm which qualifies as both an MBE and a WBE will be credited as either MBE participation or as WBE participation but will not be credited for both. However, an MBE and/or WBE firm may also receive SBE, EBE and/or DVBE credit if so qualified.

h. A SBE, EBE, DVBE prime contractor shall receive pledged participation credit for the work performed by its own workforce.

D. BIP Outreach Documentation

It is the policy of the City of Los Angeles to provide Minority Business Enterprises (MBEs), Woman Business Enterprises (WBEs), Small Business Enterprises (SBEs), Emerging Business Enterprises (EBEs), Disabled Veteran Business Enterprises (DVBEs), and Other Business Enterprises (OBEs) an equal opportunity to participate in the performance of City contracts. In order to maximize this participation while minimizing the administrative impact on city staff and bidders alike, the Mayor's Office has developed a Business Inclusion Program (BIP). The BIP requires City departments to set anticipated participation levels based on the opportunities presented in their advertised contracts and department's achievement of its annual goals. A bidder's BIP Outreach to MBEs, WBEs, SBEs, EBEs, DVBEs, and OBEs shall be determined by their compliance with the following BIP Outreach process which will be performed on the City's Business Assistance Virtual Network (BAVN). The BAVN can be accessed at www.labavn.org or by going to the City's Webpage (www.lacity.org) and linking onto "Bids, RFPs & Grants." Failure to meet the anticipated MBE, WBE, SBE, EBE, and/or DVBE participation levels will not by itself be the basis for disqualification or determination of noncompliance with this policy. **However, failure to comply with the BIP Outreach documentation requirements as described in this section will render the bid non-responsive and will result in its rejection.** *Compliance with the BIP Outreach requirements is required even if the bidder has achieved the anticipated MBE, WBE, SBE, EBE, and DVBE participation levels*. Adequacy of a bidder's BIP Outreach will be determined by the Board after consideration of the indicators of BIP Outreach as set forth below.

Any technical difficulties while utilizing the BAVN should be reported immediately using the following steps:

1. Email BAVN Support at ITA.BAVN@lacity.org.
2. Email Department of Public Works, Bureau of Engineering, Project Award & Control (PAC) Division, BIP Coordinator at eng.bavn@lacity.org.
3. If you are not contacted within 15 minutes during normal City working hours (7:00 a.m. to 4:30 p.m. Monday-Friday), call Department of Public Works, Bureau of Engineering, PAC at (213) 847- 0618.

If the above procedures are not followed as stipulated, incomplete outreach and/or incomplete documentation may not be accepted.

Each indicator (2-7) is evaluated on a pass/fail basis. All indicators (2-7) must be passed to be deemed responsive. Only BIP Outreach documentation submitted under the bidder's name will be evaluated. Therefore, submission by a third party will result in the bidder being deemed non-responsive.

1	**LEVEL OF ANTICIPATED MBE, WBE, SBE, EBE, and DVBE PARTICIPATION**

The bidder has performed a BIP Outreach in an attempt to obtain sub-bid/subcontract participation by MBEs, WBEs, SBEs, EBEs, DVBEs and OBEs which could be expected by the Awarding Authority to produce a reasonable level of participation by interested business enterprises, including the MBE, WBE, SBE, EBE and DVBE anticipated percentages set forth on Page 1 herein and to have the bidder meet the subcontracting expectations for the project.

Required Documentation: No documentation is required from the bidder.

2	**ATTENDED PRE-BID MEETING**

The bidder attended the pre-bid meeting scheduled by the Project Manager to inform all bidders of the requirements for the project for which the contract will be awarded. This requirement may be waived if the bidder certified it is informed as to those project requirements and has participated in a City-sponsored or City-approved matchmaking event in the prior 12 months.

Required Documentation: An employee of the bidder's company must attend the pre-bid meeting scheduled for this project. Credit may not be given if the employee arrives late or fails to sign the pre-bid meeting attendance roster. This requirement will be waived if the bidder certifies in writing that it is informed as to the BIP Outreach requirements for the project and has participated in a City-sponsored or City-approved matchmaking event in the prior 12 months as is evidenced by the event attendance documents.

Note: If the RFB states that the pre-bid meeting is mandatory, then attendance at the pre-bid meeting is the only way to pass this indicator.

3	**SUFFICIENT WORK IDENTIFIED FOR SUBCONTRACTORS**

The bidder has identified the minimum number, as determined by the Awarding Authority, of specific items of work that will be performed by sub-bidders/subcontractors. This will ensure an opportunity for subcontractor participation among MBEs, WBEs, SBEs, EBEs, DVBEs and OBEs.

Required Documentation: Outreach via e-mail in the selected work areas. This outreach must be performed using the BAVN's BIP Outreach system. The outreach must be to potential MBE, WBE, SBE, EBE, DVBE, and OBE sub-bidders/subcontractors that are currently registered on the BAVN. Failure of the bidder to outreach in all of the work areas selected by the City as potential subcontracting work areas may result in the bid being deemed non-responsive.

Note: City staff will access the BAVN and verify compliance with this indicator after the BIP Outreach submission deadline.

4	**WRITTEN NOTICES TO SUBCONTRACTORS**

All notifications must be provided utilizing BAVN, and made not less than **fifteen (15) calendar days** prior to the date the Prime Bid/Proposal is required to be submitted to the Awarding Authority. In all instances, bidders must document that invitations for subcontracting bids were sent to available MBEs, WBEs, SBEs, EBEs, DVBEs and OBEs for each item of work to be performed.

***Required Documentation*:** E-mail notification in each of the selected work areas to available MBEs, WBEs, SBEs, EBEs, DVBEs and OBEs for each anticipated work area to be performed. The notification must be performed using the BAVN's BIP Outreach system. The notification must be to potential sub- bidders/subcontractors currently registered on the BAVN. If the bidder is aware of a potential subcontractor that is not currently registered on the BAVN, it is the bidder's responsibility to encourage the potential subcontractor to become registered so that the bidder can include them as part of their BIP Outreach. Notifications must contain areas of work selected to be subcontracted, City of Los Angeles project name, name of the bidder, and contact person's name, address, and telephone number. Bidders are required to send notifications to a sufficient number of MBE, WBE, SBE, EBE, DVBE and OBE firms in each work area chosen, as determined by the City. What is considered sufficient will be determined by the total number of subcontractors registered on the BAVN in each specific work area.

The City will determine each work area by the North American Industry Classification System (NAICS) code. The following table shows the sufficient number of MBE, WBE, SBE, EBE, DVBE and OBE subcontractors that need to be notified for each work area.

# of Subcontractors in NAICS Code	% Prime Must Notify	Number Prime Must Notify
1-10	100%	1-10
11-20	80%	9-16
21-50	60%	13-30
51-100	40%	21-40
101-200	25%	26-50
>200	10%	20+

A bidder's failure to utilize this notification function will result in their bid being deemed non-responsive.

Note: Bidders will not be able to utilize the BAVN's BIP Outreach notification function if there are less than fifteen (15) calendar days prior to the bid submittal deadline. In utilizing the BAVN's notification function, bidders will receive a message if they have failed to outreach to a sufficient number of firms when they go to view their summary sheet. Bidders will be given an opportunity to include their own customized statements when utilizing the notification function. However, the City will take into consideration the wording and may deem a bidder non-responsive if the wording is perceived to seriously limit subcontractor responses. City staff will access the BAVN and verify compliance with this indicator after the bid submission deadline. In case of technical error, please follow the process for reporting these errors as outlined in Section D.

5	PLANS, SPECIFICATIONS AND REQUIREMENTS

The bidder provided interested sub-bid enterprises/subcontractors with information about the plans, specifications and requirements for the selected sub-bid/subcontracting work.

***Required Documentation*:** Include in Indicator No. 4, information detailing how, where and when the bidder will make the required information available to interested subcontractors. The notification must be performed using the BAVN's BIP Outreach system.

Note: At the time a bidder utilizes the BAVN's BIP Outreach notification function, the required information will automatically be included in the notification. Bidders will not be able to utilize the BAVN's BIP Outreach notification function if there are less than fifteen (15) calendar days prior to the bid submittal deadline. City staff will access the BAVN and verify compliance with this indicator after the bid submittal deadline.

6	NEGOTIATE IN GOOD FAITH

The bidder has responded to every unsolicited offer sent by a Registered Subcontractor using BAVN and has evaluated in good faith bids or quotes submitted by interested MBEs, WBEs, SBEs, EBEs, DVBEs, and OBEs. Bidders must not unjustifiably reject as unsatisfactory a bid or quote offered by a Registered Subcontractor, as determined by the Awarding Authority. The bidder must submit a list of all subcontractors for each item of work, including dollar amounts of potential work for MBEs, WBEs, SBEs, EBEs, DVBEs, and OBEs, and a copy of any and all bids or quotes received. This list must include an explanation of the evaluation that lead to the bid or quote being rejected and the explanation must have been communicated to the subcontractor using BAVN.

Required Documentation:

a) An online Summary Sheet organized by work area, listing the following:

- the bids and/or quotes received;
- the name of the subcontractor who submitted the bid/quote;
- the dollar amount of the bid/quote;
- a brief reason given for selection/non-selection as a subcontractor;
- the subcontractor selected for that work area.

b) Copies of all MBE, WBE, SBE, EBE, DVBE, and OBE bids or quotes must be submitted prior to the bidder being awarded the contract.

The bidder will be given a choice of responses to indicate 1) No Response received; 2) Response received; but no subcontractor bid submitted; or 3) Submit Bid and include bid amount.

The reasons for selection/non-selection should be included in the notes section of the online Summary Sheet. If the bidder elects to perform a work area with its own forces and they received a sub-bid, they must include a bid that shows their own costs for the work. **All bids received, regardless of whether or not the bidder outreached to the subcontractor, must be submitted and included on the on-line Summary Sheet.** To that extent, the City expects the bidder to submit a bid from each subcontractor listed on the online Summary Sheet. **All potential subcontractors with whom the bidder has had contact outside of the BAVN must be documented on the online Summary Sheet.**

The Summary Sheet must be performed using the BAVN's BIP Outreach system and must be submitted by 4:30 p.m. on the first calendar day following the day of the bid submittal deadline. If a bid is submitted by a sub-bidder/subcontractor that is not registered with the BAVN, the contractor is required to add that firm to their online Summary Sheet. A bidder's failure to utilize the BAVN's Summary Sheet function will result in their bid being deemed non-responsive.

Note: City staff may request copies of all of the bids received from sub-bidders/subcontractors as part of the BIP Outreach evaluation process. Bidders will not be able to edit their Summary Sheet on the BAVN's BIP Outreach Summary Sheet function after 4:30 p.m. on the first calendar day following the day of the bid submittal deadline. City staff will access the BAVN and verify compliance with the summary sheet provision of this indicator after the bid submittal deadline. Contractors are required to have each one of their bid-listed subcontractors registered on the BAVN prior to the bidder being awarded the contract. In case of technical error, bidders must follow the process for reporting these errors as outlined in Section D.

7	**BOND, LINES OF CREDIT, AND INSURANCE ASSISTANCE**

Each notification by the bidder shall also include an offer of assistance to interested potential MBEs, WBEs, SBEs, EBEs, DVBEs, and OBEs in obtaining bonds, lines of credit, and insurance required by the Awarding Authority or bidder.

Required Documentation: Include in Indicator No. 4, information about the bidder's efforts to assist with bonds, lines of credit and insurance. The notification must be performed using the BAVN's BIP Outreach notification system.

Note: At the time a bidder utilizes the BAVN's BIP Outreach notification function, the required information will automatically be included in the notification. Bidders will not be able to utilize the BAVN's BIP Outreach notification function if there are less than fifteen (15) calendar days prior to the bid submittal deadline. Bidders will be given an opportunity to include their own customized statements when utilizing the notification function. However, the City will take into consideration the wording and may deem a bidder non-responsive if the wording is perceived to seriously limit subcontractor responses or is deemed contrary to the intent of this indicator. City staff will access the BAVN and verify compliance with this indicator after the bid submittal deadline.

The bidders shall submit completed BIP Outreach documentation either via the BAVN's BIP Outreach system or prior to being awarded the contract, as specified for each indicator**.** The Awarding Authority in its review of the BIP Outreach documentation may request additional information to validate and/or clarify that the BIP Outreach submission was adequate. Any additional information submitted after the specified deadline will be treated at a higher level of scrutiny and may require third party documentation in order to substantiate. Such information shall be submitted promptly upon request by the Awarding Authority.

E. Award of Contract

The Awarding Authority reserves the right to reject any and all bids. The award of a contract will be to the lowest responsive, responsible bidder whose proposal complies with all requirements prescribed herein. This includes compliance with the required BIP Outreach requirements. A positive and adequate demonstration to the satisfaction of the Awarding Authority that a BIP Outreach to include MBE, WBE, SBE, EBE, DVBE and OBE subcontractors' participation was made is a condition for eligibility for award of the contract. Contractors are required to have each one of their subcontractors register on the BAVN prior to the award of the contract.

In the event that the Awarding Authority considers awarding away from the apparent low bidder because of the bidder's failure to supply adequate BIP Outreach documentation, the Awarding Authority shall afford the bidder an opportunity to present further evidence to the Awarding Authority prior to a public hearing of the bidder's BIP Outreach.

F. Subcontractors

In addition to the requirements set forth in the provisions pertaining to the listing of subcontractors, the following shall apply for the purpose of this project:

1. All Subcontractors who will be working on the Project shall be approved in writing by the Awarding Authority or its designee prior to any work being performed by said subcontractor, regardless of the dollar amount of work to be performed, and whether or not they were listed in the original bid.

    A. No other entity, including, but not limited to, the Project Engineer, Program Manager, or Construction Manager, is authorized to grant either initial approval of Subcontractor(s) or Subcontractor substitution(s), unless so designated by the Awarding Authority.

2. Any reduction, increase, or other change to any Subcontract amount without prior approval of the Awarding Authority or its designee is considered an Unauthorized Subcontractor Substitution and is subject to a penalty of ten (10) percent of the Subcontract amount, whether bid-listed or not. A subcontract dollar value increased or reduced as the result of a Change Order issued by the Engineer to add or delete from the original scope of work shall not be subject to a penalty for an Unauthorized Subcontractor Substitution.

    A. A penalty in the amount of ten (10) percent of the subcontract amount will be assessed for each subcontractor when it is found the Contractor did not pay the entire Bid-listed and/or approved dollar amount of the respective subcontractor and there has been no approval by the Awarding Authority or its designee for a reduction in the subcontract dollar amount.

    B. In the event it is found that the Contractor did not pay any of the Bid-listed and/or approved dollar amount of a subcontract without a change in scope of the original Contract, which resulted in a deletion of the subcontract work, a Change Order to the contract shall be issued deleting the unpaid dollar amount of the subcontract. In addition, the Contractor shall be penalized ten (10) percent of the subcontract amount and the City may impose sanctions as a result of such action.

3. If the contractor fails to specify a Subcontractor, or if the Contractor specifies more than one Subcontractor for the same portion of Work to be performed under the contract in excess of one-half or 1 percent of the Contractor's total original bid or $10,000.00, whichever is greater, the Contractor agrees that it is fully qualified to perform that portion of work itself, and that it shall perform that portion itself.

4. Subletting or subcontracting of any portion of the Work with a total value of more than ½ of 1 percent of the Contractor's total original bid, or $10,000.00, whichever is greater, for which no Subcontractor was designated in the original Bid will be permitted only in cases of public emergency or necessity, and then only after a finding reduced to writing as a public record of the Awarding Authority or its designee setting forth the facts constituting the emergency or necessity.

5. All requests for approval of Subcontractors must contain the following information:

   A. Project Name
   B. Project Work Order Number
   C. Subcontractor's Name
   D. Subcontractor's Business Address
   E. Subcontractor's Business Phone Number
   F. Subcontractor's Status (MBE, WBE, SBE, EBE, DVBE, OBE)
   G. Subcontractor's State of California Contractor License Number
   H. Subcontractor's City of Los Angeles Business Tax Receipt Certificate Number
   I. Dollar Amount of Work to be performed
   J. Description of Work to be performed

6. No Bid-listed Subcontractor will be approved for a dollar amount of work less than that specified in the original Bid.

7. Failure to obtain approval of the Awarding Authority or its designee in writing prior to each Subcontractor performing work on the project may result in suspension of work by that subcontractor, removal of work performed by the unapproved subcontractor, a penalty of ten (10) percent of the unapproved subcontract amount, and possible sanctions against the contractor.

8. The contractor shall set forth in its bid the following: The name, location of the place of business, telephone number, California State Contractor's License Number, and dollar amount of each Subcontractor who will perform work, labor, service, and/or supply specifically fabricated materials or equipment in an amount in excess of one-half of 1 percent of the contractor's total bid, or $10,000.00, whichever is greater, for all subcontractors listed.

9. It shall be considered an Illegal Subcontractor Substitution for anyone other than the bid-listed or approved subcontractor(s), including the prime contractor, to perform any portion of the work designated to be performed by said subcontractor without prior approval of the Awarding Authority or its designee. An Illegal Subcontractor Substitution is subject to a penalty of ten (10) percent of the subcontract amount, whether bid listed or not.

10. Failure of the Contractor to request and obtain approval from the Awarding Authority or its designee for a reduction in either a Bid-listed Subcontract amount or the Subcontract amount of a Subcontractor added after the date of the original Bid will result in a penalty of ten (10) percent of the Subcontract amount and possible sanctions against the Contractor.

11. Additional Subcontractors may be added after the time of the original Bid. The dollar value of Work to be performed by any additional subcontractor(s) may not be greater than ½ of 1 percent of the Contractor's original total Bid, or $10,000.00, whichever is greater, unless the Subcontractor will be performing Work added by Change Order causing changes or

deviations from the original Contract.

A. No approval(s) for additional Subcontractor(s) will be granted which will result in the Prime Participation Level falling below that required by the original Contract.

G. Subcontractor Substitution

In addition to the requirements for obtaining approval of all subcontractors prior to their working on the project, the following shall apply regarding substitution of any subcontractor, whether Bid-listed or not, during construction:

It is considered a substitution if anyone other than the Bid-listed and/or approved Subcontractor(s), including the Contractor, performs any portion of the work designated to be performed by said Subcontractor, or if the contractor reduces the dollar amount of any subcontractor without written approval of the Inspector.

All substitutions of Subcontractors, whether bid-listed or approved after the date of the original Bid opening, shall be approved in writing by the Awarding Authority or its designee prior to any Work being performed by the substituting Subcontractor.

Failure to obtain approval for any Subcontractor substitution, regardless of the dollar amount of the work performed, may result in rejection of the affected work, a penalty of ten (10) percent of the subcontract amount, and possible sanctions against the contractor.

There shall be no decrease in dollar value of Work to be performed by Subcontractor(s) approved as a substitute for any Subcontractor, whether Bid-listed or approved after the original date of Bid opening, without a change in scope of the Work to be performed by the originally Bid-listed or approved Subcontractor. Written evidence of a change of scope must be provided by the Engineer prior to approval of a change in dollar value of a Subcontractor either Bid-listed or approved after the original date of Bid opening.

1. A Contractor whose Bid is accepted may not:

   A. Reduce the dollar amount of any subcontractor without the written approval of the Awarding Authority or its designee.

   B. Substitute any person as Subcontractor in place of a subcontractor listed in the original bid or approved to work on the project after award, except that the Awarding Authority or its designee may consent to the substitution of another subcontractor for one of the following situations:

      a. When the subcontractor listed in the original bid or proposal or approved after award after having had a reasonable opportunity to do so fails or refuses to execute a written contract, when that written contract, based on the general terms, conditions, plans and specifications for the project involved or the terms of that subcontractor's written bid, is presented to the subcontractor by the contractor.

      b. When the subcontractor becomes bankrupt or insolvent.

      c. When the subcontractor fails or refuses to perform its subcontract.

      d. When the subcontractor fails or refuses to meet the bond requirements

of the contractor.

e. When the contractor demonstrates to the Awarding Authority or its designee's satisfaction that the name of the subcontractor was listed as the result of an inadvertent clerical error.

f. When the subcontractor is not licensed pursuant to the State of California Contractor's License Law to perform the work designated.

g. When the subcontractor refuses to obtain a City of Los Angeles Business Tax Receipt Certificate (BTRC).

h. When the Awarding Authority or its designee concurs with the contractor that the work being performed by the subcontractor is unsatisfactory and not in substantial accordance with the Contract Documents, or the subcontractor is delaying or disrupting progress of the work.

i. When the subcontractor fails to submit an Affirmative Action Plan acceptable to the Awarding Authority.

j. When the Awarding Authority determines the subcontractor is not a responsible contractor.

C. Permit a subcontract to be voluntarily assigned or transferred, or allow it to be performed by anyone other than the original subcontractor listed in the original bid or approved to perform that portion of work after award, without the consent of the Awarding Authority or its designee.

D. Other than in the performance of Change Orders causing changes or deviations from the original contract, sublet or subcontract any portion of the work in excess of 1 half of 1 percent of the contractor's total original bid as to which its original bid did not designate a subcontractor.

2. A request for substitution of any Subcontractor, whether Bid-listed or not, must be made in writing to the Awarding Authority or its designee, and must include letter(s) of explanations to the reason for the requested substitution.

3. The Contractor shall conduct a BIP Outreach prior to requesting any Subcontractor substitution, regardless of the status (MBE, WBE, SBE, EBE, DVBE, OBE) of the Subcontractor being substituted for.

A. The Contractor shall contact some of each of the following: certified MBE, certified WBE, certified SBE, certified EBE, certified DVBE, and OBE sub-bid prospects from each trade for which sub-bid/subcontracting work is available, and document the following for submittal to the Awarding Authority or its designee along with all other required documentation:

a. The name of the company contacted, the contact person, telephone number, date and time of contact.

b. Response for each item of work that was solicited, including dollar amount(s).

c. Reason for selection or rejection of each sub-bid prospect.

d. In the event the Contractor is unable to find certified MBE, certified WBE, certified SBE, certified EBE, certified DVBE and/or OBE sub-bid prospects (first from the BIP Outreach Summary Sheet, then from other outreach methods) for each trade, the Contractor is advised to contact the Awarding Authority or its designee for assistance prior to certifying under penalty of perjury that it was unable to fully meet this requirement.

B. In the event that a subcontract is reduced due to a project change that will not be specified in a Change Order, the Contractor shall request approval for reducing the Subcontract by submitting the following:

a. The name of the company for which the reduction in the Subcontract amount is requested and the dollar amount of the requested reduction.

b. The reason for the reduction. Specific details of the reason for the requested reduction are required in order for the request to be considered.

C. All documentation shall be submitted to the Awarding Authority or its designee.

a. Failure to provide all required information will result in rejection of the Substitution request until such time as all information is submitted.

D. The information required for requesting substitution of any Subcontractor, whether Bid- listed or approved after the original date of Bid opening is:

a. Project Name
b. Project Work Order Number
c. Original Subcontractor's Name
d. Original Subcontractor's Business Address
e. Original Subcontractor's Business Phone Number
f. Original Subcontractor's Status (MBE, WBE, SBE, EBE, DVBE, OBE)
g. Letter of withdrawal from original Subcontractor (when applicable)
h. Letter of explanation from the Prime Contractor stating reason(s) for request
i. Substituting Subcontractor's Name
j. Substituting Subcontractor's Business Address
k. Substituting Subcontractor's Business Phone Number
l. Substituting Subcontractor's State of California Contractor's License Number
m. Substituting Subcontractor's Status (MBE, WBE, SBE, EBE, DVBE, OBE)
n. Substituting Subcontractor's City of Los Angeles Business Tax Receipt Certificate Number (BTRC)
o. Dollar amount of Work to be performed by substituting Subcontractor
p. Description of Work to be performed by substituting Subcontractor
q. BIP Outreach Documentation

4. Penalties:

A Contractor violating any provision(s) of this subsection shall be deemed in violation of the Contract, and the Awarding Authority at its discretion may:

A. Cancel the Contract.

B. Assess the Contractor a penalty of not more than ten (10) percent of the amount of the Subcontract(s) involved.

5. Potential Penalties:
At the end of each construction project, before calculation of any actual final subcontracting penalties, the City may withhold as disputed funds 15% of all subcontract(s) that appear to be in violation of any subcontracting provision of the project, and 15% of all subcontract(s) which performed work on the project without, or prior to, approval by the Awarding Authority or its designee.

H. Submittal Documents

1. List of Subcontractors: Bidders will submit with their Bid the List of Subcontractors. The Bidder shall list the name, business address, business telephone, contact person and a description of work or supplies to be provided by each of the firms which will perform more than ½ of 1 percent, or
$10,000, whichever is greater, of the original Bid amount on the project. This list is considered the bidder's list of subcontractors that will be utilized on the project, and bidders are expected to use the firms, for the total dollar amounts, listed on the List of Subcontractors.

2. Subcontractors/Subcontractor Substitutions: Bidders will be required to submit this form prior to contract award. The bidder shall complete, sign, and submit this form to the Awarding Authority or its designee. A request for this form by City staff should not be construed as a recommendation for award. This form is a summary of the requirements listed under Section F. Subcontractors, and Section G. Subcontractor Substitutions, and does not supersede any of the procedures or requirements listed in those sections.

I. Sub-agreement Falsification

Falsification or misrepresentation of a sub-agreement as to company name, contract amount and/or actual work to be done by the sub-bidder/subcontractor will result in sanctions set forth in provisions pertaining to listing of subcontractors.

J. Final Subcontracting Report Submittal

The Contractor must submit the Final Subcontracting Report, attached as page 15R, to the Awarding Authority or its designee, within **twenty-one (21) calendar days** after the issuance of the Statement of Completion or a request for the report by the Awarding Authority, whichever comes first. Failure to comply may result in the assessment of liquidated damages in the amount of **$100.00** per day by the Awarding Authority.

SUBCONTRACTORS / SUBCONTRACTOR SUBSTITUTIONS
(MUST BE SUBMITTED PRIOR TO AWARD OF A CONTRACT)

Project Name __

Work Order Number ____

Contractor _

Acceptance by the City of Los Angeles of this Contractor's Bid does not indicate automatic approval of the subcontractor(s) listed in the Bid-proposal.

By acknowledging with the signature of an authorized representative below, the Contractor understands that it must obtain approval for **all** Subcontractors, at all levels, whether Bid-Listed or not, from the Awarding Authority or its designee prior to the Subcontractor(s) performing any work on this project.

The Contractor understands that no entity other than the Awarding Authority or its designee has the authority to approve either an original request for approval or request for substitution of any subcontractor(s).

The Contractor further understands that Subcontractors approved for work on any other project for the City of Los Angeles does not constitute approval to work on this project also, and that there are no "blanket approvals" of Subcontractors for this, or any other, project.

The Contractor also understands that it may not substitute any Subcontractor, at any level, whether Bid-listed or not, without the approval of the Awarding Authority or its designee.

The Contractor understands and acknowledges that there may be a penalty assessed of no more than ten (10) percent of the subcontract amount of each Subcontractor for any of the following:

1. Failure to obtain approval for any Subcontractor(s), at any level, whether Bid-listed or not, from the Awarding Authority or its designee prior to the subcontractor(s) beginning work on the project.
2. Performing the work of any subcontractor(s) at any level, whether Bid-listed or not, without the approval of the Awarding Authority or its designee.
3. Reducing the Bid-listed and/or approved dollar amount of work to be performed by any Subcontractor(s), at any level, whether Bid-listed or not, for any reason, without the approval of the Awarding Authority or its designee.
4. Substituting for any Subcontractor(s), at any level, whether Bid-listed or not, without the approval of the Awarding Authority or its designee.
5. Assigning the work of any Subcontractor(s), at any level, whether Bid-listed or not, to anyone other than said Subcontractor, without the approval of the Awarding Authority or its designee.

_____ _____

Authorized Contractor Representative (Print Name) Authorized Contractor Representative Signature

_____

Date

FINAL SUBCONTRACTING REPORT

(SUBMIT WITHIN 21 CALENDAR DAYS OF ISSUANCE OF THE STATEMENT OF COMPLETION or WHEN REQUESTED BY THE AWARDING AUTHORITY)

Project Title:_____ Work Order No.:_____ Contact Name: _____

Contractor:_____ Address: _____

Name, Address and Telephone # of Bid-listed Subcontractor/Supplier/Trucker	Description of Work	MBE/WBE SBE/EBE DVBE/OBE	Original $ Amount	Final $ Amount	Reason For Discrepancy **(Change Order Nos. and $)**

I certify that the above information is complete and correct.

_____ _____ _____ _____

Signature Title Telephone Number Date

For City of Los Angeles use only:	Final $ Amounts	% Achieved	% Pledged		Final $ Amounts	% Achieved	% Pledged
Final Contract $	MBE $			Final Contract $	EBE $		
	WBE $				DVBE $		
	SBE $				OBE $		
Final Contract $	Total Cash Allowances Paid to Contractor $		Final Contract less Cash Allowances Paid to Contractor $		MSM $		

SCHEDULE "A"
SUBCONTRACTORS AND SUPPLIERS

The Prime Contractor shall perform, with its own organization, Contract work amounting to at least 30 percent of the Base Bid Price, unless otherwise instructed.

PROJECT TITLE			W.O. No./PRJ No.	NAME OF PERSON COMPLETING THIS FORM
BIDDER (NAME OF FIRM)			ADDRESS / CITY / STATE / ZIP CODE	
CONTRACTOR'S LICENSE NO.	LICENSE CATEGORIES	EXPIRATION DATE	YEARS IN BUSINESS	TELEPHONE No. FAX No.
Type of Ownership: ☐ Sole Ownership ☐ Corporation ☐ Partnership ☐ Joint Venture			Is Bidder any of the following as defined in the Business Inclusion Program? Check all that apply. MBE ☐ WBE ☐ SBE ☐ EBE ☐ DVBE ☐	

DOLLAR PARTICIPATION OF ALL SUBCONTRACTORS AND SUPPLIERS

List all subcontractors and suppliers who will do work on this project, regardless of the amount of money involved. (Ordinance No. 150,595. Los Angeles Administrative Code Section 10.14 "Provisions Pertaining to Listing of Subcontractors."; Business Inclusion Program, Page 15 *et seq.*).

DESCRIPTION OF BASE BID WORK TO BE PROVIDED DIRECTLY BY **PRIME BIDDER:**	DOLLAR VALUE OF BASE BID TO BE PERFORMED BY **PRIME BIDDER:**
	$

SUBCONTRACTORS OR SUPPLIERS NAME, ADDRESS, TELEPHONE NO.	SUB	SUPPLIER	CONTRACTOR LICENSE NO.	DESCRIPTION OF WORK OR SUPPLIES TO BE PROVIDED	MBE	WBE	SBE	EBE	DVBE	OBE	DOLLAR VALUE OF SUBCONTRACTOR or SUPPLIIER (note if add/deduct item)
	☐	☐									Base: $_____ Add's: $_____ Ded's: $_____
	☐	☐									Base: $_____ Add's: $_____ Ded's: $_____

(CONTINUED ON NEXT PAGE)

PERCENTAGE OF MBE/WBE/SBE/EBE/DVBE PARTICIPATION

Total combined dollar value of MBE/WBE/SBE/EBE/DVBE subcontractors and suppliers portions of work. Do not include prime bidder's portion unless it is a Joint Venture, in which case the value of work to be performed by one of the Joint Venturers who is an MBE, WBE, SBE, EBE or DVBE may be included.

TOTAL MBE'S AMOUNT: $_____ = ___ ___ ___ ___%

TOTAL WBE's AMOUNT: $_____ = ___ ___ ___ ___%

TOTAL SBE's AMOUNT: $_____ = ___ ___ ___ ___%

TOTAL EBE's AMOUNT: $_____ = ___ ___ ___ ___%

TOTAL DVBE's AMOUNT: $_____ = ___ ___ ___ ___%

BASE BID AMOUNT:_____

_____
Signature of Person Completing Form

_____
Title Date

SCHEDULE "A" (Continued)
SUBCONTRACTORS AND SUPPLIERS

SUBCONTRACTORS OR SUPPLIERS NAME, ADDRESS, TELEPHONE NO.	SUB	SUPPLIER	CONTRACTOR LICENSE NO.	DESCRIPTION OF WORK OR SUPPLIES TO BE PROVIDED	MBE	WBE	SBE	EBE	DVBE	OBE	DOLLAR VALUE OF SUBCONTRACTOR or SUPPLIIER (note if add/deduct item)
	☐	☐									Base: $_____ Add's: $_____ Ded's: $_____
	☐	☐									Base: $_____ Add's: $_____ Ded's: $_____
	☐	☐									Base: $_____ Add's: $_____ Ded's: $_____
	☐	☐									Base: $_____ Add's: $_____ Ded's: $_____
	☐	☐									Base: $_____ Add's: $_____ Ded's: $_____
	☐	☐									Base: $_____ Add's: $_____ Ded's: $_____
	☐	☐									Base: $_____ Add's: $_____ Ded's: $_____
	☐	☐									Base: $_____ Add's: $_____ Ded's: $_____

CITY OF LOS ANGELES
PLEDGE OF COMPLIANCE WITH CONTRACTOR RESPONSIBILITY ORDINANCE

Los Angeles Administrative Code (LAAC) Section 10.40 et seq. (Contractor Responsibility Ordinance) provides that, unless specifically exempt, City contractors working under service contracts of at least $25,000 and three months, contracts for services and for purchasing goods and products that involve a value in excess of twenty-five thousand dollars ($25,000) and a term in excess of three months are covered by this Article; and construction contracts of any amount; public lessees; public licensees; and certain recipients of City financial assistance or City grant funds, shall comply with all applicable provisions of the Ordinance. Upon award of a City contract, public lease, public license, financial assistance or grant, the contractor, public lessee, public licensee, City financial assistance recipient, or grant recipient, and any its subcontractor(s), shall submit this Pledge of Compliance to the awarding authority.

The contractor agrees to comply with the Contractor Responsibility Ordinance and the following provisions:

(a) To comply with all federal, state, and local laws in the performance of the contract, including but not limited to laws regarding health and safety, labor and employment, wage and hours, and licensing laws, which affect employees.
(b) To notify the awarding authority within 30 calendar days after receiving notification that any governmental agency has initiated an investigation which may result in a finding that the contractor did not comply with any federal, state, or local law in the performance of the contract, including but not limited to laws regarding health and safety, labor and employment, wage and hours, and licensing laws, which affect employees.
(c) To notify the awarding authority within 30 calendar days of all findings by a governmental agency or court of competent jurisdiction that the contractor has violated any federal, state, or local law in the performance of the contract, including but not limited to laws regarding health and safety, labor and employment, wage and hours, and licensing laws which affect employees.
(d) If applicable, to provide the awarding authority, within 30 calendar days, updated responses to the Responsibility Questionnaire if any change occurs which would change any response contained within the Responsibility Questionnaire and such change would affect the contractor's fitness and ability to continue the contract.
(e) To ensure that subcontractors working on the City agreement (including contractors or subcontractors of a public lessee, licensee, sublessee, or sublicensee that perform or assist in performing services on the leased or licensed premises) shall comply with all federal, state, and local laws in the performance of the contract, including but not limited to laws regarding health and safety, labor and employment, wage and hours, and licensing laws, which affect employees.
(f) To ensure that subcontractors working on the City agreement (including contractors or subcontractors of a public lessee, licensee, sublessee, sublicensee that perform or assist in performing services on the leased or licensed premises) submit a Pledge of Compliance.
(g) To ensure that subcontractors working on the City agreement (including contractors or subcontractors of a public lessee, licensee, sublessee, or sublicensee that perform or assist in performing services on the leased or licensed premises) shall comply with paragraphs (b) and (c).

Failure to complete and submit this form to the Awarding Authority may result in withholding of payments by the City Controller, or contract termination.

Company Name, Address and Phone Number

Signature of Officer or Authorized Representative Date

Print Name and Title of Officer or Authorized Representative

Awarding City Department Contract Number

CITY OF LOS ANGELES
CONTRACTOR RESPONSIBILITY ORDINANCE (CRO) QUESTIONNAIRE

Unless otherwise exempt from the Contractor Responsibility Ordinance (Los Angeles Administrative Code Section 10.40, et. seq.), a Company/Firm bidding with the City of Los Angeles must complete this Questionnaire. If no bid is required, the prospective contractor still must submit a Questionnaire.

The signatory for this Questionnaire must be authorized to respond to these questions on behalf of the Company/Firm. **Any false or misleading statement(s), the failure to answer any of the required questions, or the failure to submit the completed Questionnaire with its bid may render the bid/proposal non-responsive.** If a response does not fit in the space provided, then you may submit an attachment with your questionnaire.

The Company is responsible for keeping the Questionnaire responses current. If any changes have occurred that would render any of the responses inaccurate in any way, this document must be updated within thirty (30) days of the change(s).

A. BIDDER / PROPOSER / PROSPECTIVE CONTRACTOR CONTACT INFORMATION

Business Name _____ Contractor's License Number _____

Street Address _____ City _____ State _____ Zip _____

Contact Person, Title _____ Phone _____ Fax _____

TYPE OF SUBMISSION:

The Questionnaire being submitted is:

☐ An initial submission of a completed Questionnaire.

☐ An update of a prior Questionnaire dated _____/_____/_____.

☐ No change. I certify under penalty of perjury under the laws of the State of California that there has been no change to any of the responses since the last Questionnaire dated ____/_____/____ was submitted by the firm.

B. BUSINESS ORGANIZATION / STRUCTURE

Indicate the organizational structure of your firm. "Firm" includes a sole proprietorship, corporation, joint venture, consortium, association, or any combination thereof.

☐ **Corporation**: Date incorporated: _____/_____/_____ State of incorporation: _____

List the corporation's current officers.

President: _____

Vice President: _____

Secretary: _____

Treasurer: _____

List all the stock owners who own 5% or more of the corporation's stock. Publicly traded corporations do not need to list its stock owners.

(Use this space. If you need additional space, you can attach a document)

☐ **Partnership:** Date formed: _____/_____/_____ State of formation: _____

List all partners in your firm.

(Use this space. If you need additional space, you can attach a document)

☐ **Sole Proprietorship:** Date started: _____/_____/_____

List any firm(s) that you have been associated with as an owner, partner, or officer for the last five years. Do not include ownership of stock in a publicly traded company in your response to this question.

(Use this space. If you need additional space, you can attach a document)

☐ **Joint Venture:** Date formed: _____/_____/_____

(1) List each firm that is a member of the joint venture and (2) List the percentage of ownership the firm will have in the joint venture. **NOTE: Each member of the Joint Venture must complete a separate Questionnaire for the Joint Venture's submission to be considered a responsive bid.**

(Use this space. If you need additional space, you can attach a document)

C. OWNERSHIP AND NAME CHANGES

1. Is your firm a subsidiary, parent, holding company, or affiliate of another firm?

   ☐ **Yes** ☐ **No**

   If **Yes**, explain the relationship between your firm and the associated firm(s). Include information about an affiliated firm only if one firm owns 50% or more of another firm, or if an owner, partner or officer of your firm holds a similar position in another firm.

(Use this space. If you need additional space, you can attach a document)

2. Have any of your firm's owners, partners, or officers operated a similar business in the past five years?

☐ **Yes** ☐ **No**

If **Yes**, list the names and addresses of all such businesses, and the person who operated the business. Include information about a similar business only if an owner, partner or officer of your firm holds a similar position in another firm.

(Use this space. If you need additional space, you can attach a document)

3. Has your firm changed names in the past five years?

☐ **Yes** ☐ **No**

If **Yes**, list all prior names, addresses, and the dates they were used. Explain the reason for each name change in the last five years.

(Use this space. If you need additional space, you can attach a document)

4. Are any of your firm's contractor licenses held in the name of a corporation or partnership?

☐ **Yes** ☐ **No**

If **Yes**, list the name of the corporation or partnership that actually holds the license.

(Use this space. If you need additional space, you can attach a document)

D. FINANCIAL RESOURCES AND RESPONSIBILITY

5. In the past five years, has your firm ever been denied construction bonding?

☐ **Yes** ☐ **No**

If **Yes**, explain the circumstances surrounding each instance.

(Use this space. If you need additional space, you can attach a document)

6. Is your firm now, or has it been at any time in the last five years, the debtor in a bankruptcy case?

☐ **Yes** ☐ **No**

If **Yes**, explain the circumstances surrounding each instance.

(Use this space. If you need additional space, you can attach a document)

7. Is your firm in the process of, or in negotiations toward, being sold or dissolved?

☐ **Yes** ☐ **No**

If **Yes**, explain the circumstances.

(Use this space. If you need additional space, you can attach a document)

E. INSURANCE

8. In the past five years, has any bonding company made any payments to satisfy any claims made against a bond issued on your firm's behalf?

☐ **Yes** ☐ **No**

If **Yes**, explain the circumstances surrounding each instance.

(Use this space. If you need additional space, you can attach a document)

9. Indicate the status of your firm's current workers' compensation insurance policy (check one):

☐ **Workers' Compensation Insurance Policy Currently in Effect**

☐ **Legally Self-Insured**

☐ **No Workers' Compensation Policy Currently in Effect***

*If you do not have a worker's compensation insurance policy currently in effect, and you are not legally self-insured, provide an explanation.

(Use this space. If you need additional space, you can attach a document)

10. List the Experience Modification Rate (EMR) issued to your firm annually by your workers' compensation insurance carrier for the last three years. Begin with the most recent year (YR 1) that an EMR rate was issued (EMR -1). If any of the rates for the three years is or was 1.00 or higher, provide an explanation below.

    YR. 1: ____ EMR-1: ____ YR 2: ____ EMR-2: ____ YR. 3: ____ EMR-3:

(Use this space. If you need additional space, you can attach a document)

11. Within the past five years, has your firm employed workers that were not covered under workers' compensation insurance or state approved self-insurance?

    ☐ **Yes** ☐ **No**

    If **Yes**, explain each instance. If No, attach a statement from your workers' compensation insurance provider that you have been continuously insured for the past five years.

(Use this space. If you need additional space, you can attach a document)

F. PERFORMANCE HISTORY

12. How many years has your firm been in operation? _____ Years.

13. Has your firm ever entered into any contract with the City of Los Angeles or any of its departments?

    ☐ Yes ☐ No

    If, **Yes**, list all contracts your firm has had with the City of Los Angeles for the last five (5) years. If your firm has had more than 10 contracts with the City of Los Angeles, then use the 10 most recent (and most similar) contracts. For each contract listed in response to this question, include: (a) entity name; (b) name of a contact and phone number; (c) purpose of contract; (d) total cost; (e) starting date; and (f) ending date.

(Use this space. If you need additional space, you can attach a document)

14. List all contracts that require similar work as the current bid/proposal in which your firm has had with any private or governmental entity (other than the City of Los Angeles) over the last five years. If your firm has had more than 10 contracts with similar work with any private or other governmental entities, then use the 10 more recent (and most similar) contracts. For each contract listed in response to this question,

include: (a) entity name; (b) name of a contact and phone number; (c) purpose of contract; (d) total cost; (e) starting date; and (f) ending date.

(Use this space. If you need additional space, you can attach a document)

15. In the past five years, has a governmental or private entity or individual terminated your firm's contract prior to its completion?

☐ **Yes** ☐ **No**

If **Yes**, explain the circumstances surrounding each instance.

(Use this space. If you need additional space, you can attach a document)

16. In the past five years, has your firm previously hired a debarred subcontractor to perform work on a government contract?

☐ **Yes** ☐ **No**

If **Yes**, explain the circumstances surrounding each instance.

(Use this space. If you need additional space, you can attach a document)

17A. In the past five years, has your firm been debarred or determined to be a non-responsible bidder or contractor?

☐ **Yes** ☐ **No**

If **Yes**, explain the circumstances surrounding each instance.

(Use this space. If you need additional space, you can attach a document)

17B.. Has your firm ever received a Notice of Unsatisfactory Performance by the Bureau of Contract Administration pursuant to the City Contractor's Performance Evaluation Ordinance (LAAC Section 10.39)?

☐ **Yes** ☐ **No**

If **Yes**, please enter the date of the Notice(s).

G. DISPUTES

18A. In the past five years, has your firm been a defendant in a court case or other legal proceeding on a matter related to any of the following issues? For parts (a) and (b) below, check **Yes** even if the matter only proceeded to arbitration, mediation or other dispute resolution process. For part (c), check **Yes** only if the matter proceeded to court litigation, even if the case was later settled or dismissed.

(a) Payment to subcontractors?

☐ **Yes** ☐ **No**

(b) Work performance on a contract?

☐ **Yes** ☐ **No**

(c) Employment-related litigation brought by an employee?

☐ **Yes** ☐ **No**

18B. If you answer **Yes** to any of the questions below, explain the circumstances surrounding each instance. For each instance, you must include the following in your response: the name of the plaintiff(s), the specific cause(s) of action or claim(s), the original date of filing; and the disposition/current status.

(Use this space. If you need additional space, you can attach a document)

19. Does your firm have any outstanding judgments pending against it?

☐ **Yes** ☐ **No**

If **Yes,** explain the circumstances surrounding each instance.

(Use this space. If you need additional space, you can attach a document)

20. In the past five years, has your firm been assessed liquidated damages on a contract?

☐ **Yes** ☐ **No**

If **Yes**, explain the circumstances surrounding each instance and identify all the projects for which liquidated damages were assessed, the amount of liquidated damages assessed and paid, and the name and address of the project owner.

(Use this space. If you need additional space, you can attach a document)

H. COMPLIANCE

For the following questions, the term "owners" does not include stock owners in your firm if your firm is a publicly traded corporation.

21A. In the past five years, has your firm or any of its owners, partners or officers, ever been investigated, cited, assessed any penalties, or been found to have violated any laws, rules, or regulations enforced or administered, by any of the governmental entities listed on page 12:

☐ **Yes** ☐ **No**

21B. If **Yes**, explain the circumstances surrounding each instance, including the governmental entity or entities that were involved, the dates of such instances, and the outcome.

(Use this space. If you need additional space, you can attach a document)

22. Within the past five years, has your firm, or any person employed by your firm, been investigated, found to have violated, cited, assessed any penalty, or been subject to any disciplinary action by a licensing agency for violation of any licensing law, rule or regulation?

☐ **Yes** ☐ **No**

If **Yes**, explain the circumstances surrounding each instance in the last five years.

(Use this space. If you need additional space, you can attach a document)

23. In the past five years, has your firm, any of its owners, partners, or officers, been penalized or given a letter of warning by the City of Los Angeles for failing to obtain authorization from the City for the substitution of a Minority-owned (MBE), Women-owned (WBE), or Other (OBE) business enterprise?

☐ **Yes** ☐ **No**

If **Yes**, explain the circumstances surrounding each instance in the last five years.

(Use this space. If you need additional space, you can attach a document)

24A. Provide the name(s), address(s) and telephone number(s) of the apprenticeship program sponsor(s) approved by the California Division of Apprenticeship Standards that will provide apprentices to your company for use on any public works projects that you are awarded by the City of Los Angeles.

(Use this space. If you need additional space, you can attach a document)

24B. Provide the name(s), address(s) and telephone number(s) of the apprenticeship program sponsor(s) approved by the California Division of Apprenticeship Standards that have provided apprentices to your company on any public works project on which your firm has participated within the last 3 years.

(Use this space. If you need additional space, you can attach a document)

I. BUSINESS INTEGRITY

For the following questions, the term "firm" includes any owner, partner, or officer in the firm. If your firm is a publicly traded corporation, the term "owner(s)" does not include its stock owners.

25A. For questions (a), (b), and (c) below, check **Yes** if the situation applies to your firm.

(a) Is a governmental entity or public utility currently investigating your firm for making a false claim or material misrepresentation?

☐ **Yes** ☐ **No**

(b) In the past five years, has a governmental entity or public utility alleged or determined that your firm made a false claim or material misrepresentation?

☐ **Yes** ☐ **No**

(c) In the past five years, has your firm been convicted of, or found liable in a civil suit for, making a false claim or material misrepresentation to any governmental entity or public utility?

☐ **Yes** ☐ **No**

25B. If you check **Yes** to any of the three questions above, explain the circumstances surrounding each instance of a false claim or material misrepresentation.

(Use this space. If you need additional space, you can attach a document)

26. In the past five years, has your firm or any of its owners or officers been convicted of a crime involving the

bidding of a government contract, the awarding of a government contract, the performance of a government contract, or the crime of theft, fraud, embezzlement, perjury, or bribery?

☐ **Yes** ☐ **No**

If **Yes**, explain the circumstances surrounding each instance.

(Use this space. If you need additional space, you can attach a document)

TERMS OF ACCEPTANCE AND SIGNATURE:

I certify under penalty of perjury under the laws of the State of California that I read and understand the questions contained in this questionnaire and the responses contained herein and on all Attachments. I further certify that I have provided full and complete answers to each question, and that all information provided in response to this Questionnaire is true and accurate to the best of my knowledge and belief.

Electronic Signature:

_____ _____

Signature *Date*

☐ I understand that checking this box constitutes a legal signature confirming that I acknowledge and agree to the above Terms of Acceptance.

Execution of document by E-signature. By clicking on the check box, it indicates an electronic signature. This is considered to be the legal equivalent of a manual or "wet" signature. Once signed electronically, this document is considered original and legally binding.

ATTACHMENT A: GOVERNMENTAL ENTITIES FOR QUESTION NO. 21A

Check **Yes** in response to Question No. 21A if your firm or any of its owners, partners or officers, have ever been investigated, cited, assessed any penalties, or found to have violated any laws, rules, or regulations enforced or administered, by any of the governmental entities listed below (or any of its subdivisions), including but not limited to those examples specified below. The term "owner" does not include owners of stock in your firm if your firm is a publicly traded corporation. If you answered **Yes**, provide an explanation of the circumstances surrounding each instance, including the entity involved, the dates of such instances, and the outcome.

FEDERAL ENTITIES

Federal Department of Labor
- American with Disabilities Act
- Immigration Reform and Control Act
- Family Medical Leave Act
- Fair Labor Standards Act
- Davis-Bacon and laws covering wage requirements for federal government contract workers
- Migrant and Seasonal Agricultural Workers Protection Act
- Immigration and Naturalization Act
- Occupational Safety and Health Act
- anti-discrimination provisions applicable to government contractors and subcontractors
- whistleblower protection laws

Federal Department of Justice
- Civil Rights Act
- American with Disabilities Act
- Immigration Reform and Control Act of 1986
- bankruptcy fraud and abuse

Federal Department of Housing and Urban Development (HUD)
- anti-discrimination provisions in federally subsidized/assisted/sponsored housing programs
- prevailing wage requirements applicable to HUD related programs

Federal Environmental Protection Agency
- Environmental Protection Act

National Labor Relations Board
- National Labor Relations Act

Federal Equal Employment Opportunity Commission
- Civil Rights Act
- Equal Pay Act
- Age Discrimination in Employment Act
- Rehabilitation Act
- Americans with Disabilities Act

STATE ENTITIES

California's Department of Industrial Relations
- wage and labor standards, and licensing and registration
- occupational safety and health standards
- workers' compensation self insurance plans
- Workers' Compensation Act
- wage, hour, and working standards for apprentices
- any provision of the California Labor Code

California's Department of Fair Employment and Housing
- California Fair Employment and Housing Act
- Unruh Civil Rights Act
- Ralph Civil Rights Act

California Department of Consumer Affairs
- licensing, registration, and certification requirements
- occupational licensing requirements administered and/or enforced by any of the Department's boards, including the Contractor's State Licensing Board

California's Department of Justice

LOCAL ENTITIES

City of Los Angeles or any of its subdivisions for violations of any law, ordinance, code, rule, or regulation administered and/or enforced by the City, including any letters of warning or sanctions issued by the City of Los Angeles for an unauthorized substitution of subcontractors, or unauthorized reductions in dollar amounts subcontracted.

OTHERS

Any other federal, state, local governmental entity for violation of any other federal, state, or local law or regulation relating to wages, labor, or other terms and conditions of employment.

SECURITY GUARD SERVICES

In the event the successful contractor elects to provide a security guard at the project site, the contractor will guarantee that the security personnel are properly trained, qualified, and certified, and meet the minimum requirements and qualifications, and have the following licenses and permits in the files:

1. All current and required licenses, certificates and/or permits, permanent "Guard Card" and permanent "Gun Card" (when the site or assignment requires the security officer to be armed, otherwise a permanent "Gun Card" is not required).
2. Permits and/or licenses to carry and use pepper spray, handcuffs, solid PR-24 baton, firearms/weapons.
3. Certificate of Knowledge and Powers of Arrest for private persons.
4. Special Officer permits from the LAPD. (L.A.M.C. Sect. 52.34, LAPD Special Officer's Permit).
5. Valid Class C California Driver's License and/or California I.D.
6. Authorization for release of all Security Officer and Field Supervisor file information to the Contract Administrator.

In Addition, security officers/guards who have been involved in any of the following will not be accepted for assignment to City owned project sites:

1. Any Felony Conviction.
2. Any high-grade misdemeanor.
3. Any Sex Crime Conviction.
4. Any military conduct that involved dishonorable discharge, bad conduct, or an undesirable discharge.

Verification for above violations, military conduct, and crime will be done through California Dept. of Justice, DMV, and/or FBI.

Presentation of Documents:

All Contract Security Officers and Field Supervisors shall present all required identification, certificates, permits, etc. upon demand of Contract Administrator or authorized designee/officer. Failure of any Security Officer and/or Field Supervisor to comply will result in immediate removal from all City Facilities

Disclosure Ordinances Affidavit

Unless otherwise exempt by the provisions of the Slavery Disclosure Ordinance (SDO) and Disclosure of Border Wall Contracting Ordinance (DBWCO), any contract awarded under this RFP/RFQ/RFB will be subject to the SDO, Section 10.41 of the Los Angeles Administrative Code, the DBWCO and Section 10.50 of the Los Angeles Administrative Code.

You must register on LABAVN (www.labavn.org) to access the updated Disclosure Ordinances Affidavit web form. The web form can be found by clicking on the "Profiles" tab. Scroll to the "Company Profile" section and click on "Compliance Documents". The web form should be completed and submitted by the time of RFP/RFQ/RFB submission.

The web form will be verified by the Bureau of Contract Administration (BCA) only if your company is the successful Proposer/Bidder selected for contract award. Proposers/Bidders seeking additional information regarding the requirements of the SDO and DBWCO Disclosure Ordinances may visit the Bureau of Contract Administration's website at http://bca.lacity.org.

Municipal Lobbying Ordinance

♦♦♦**Los Angeles Municipal Code §§ 48.01 *et seq.***

Effective January 30, 2013

Prepared by

200 North Spring Street, 24th Floor
Los Angeles, CA 90012
(213) 978-1960
TTY (213) 978-2609
http://ethics.lacity.org

Los Angeles Municipal Lobbying Ordinance
TABLE OF CONTENTS

SEC. 48.01 Title and Findings. 1

SEC. 48.02 Definitions 1

Activity expense 1
Agency 1
At the behest 2
Attempting to influence 2
City official 2
Client 2
Compensated services 2
Controlled committee 2
Direct communication 2
Donation 3
Elective city officer 3
Elective officer 3
Fundraiser 3
Fundraising activity 3
Host or sponsor 3
Lobbying activities 3
Lobbying entity 3
Lobbying firm 3
Lobbyist 4
Lobbyist employer 4
Major filer 4
Municipal legislation 4
Person 5
Solicit 5

SEC. 48.03 Exemptions. 6

SEC. 48.04 Prohibitions. 7

SEC. 48.05 Record Keeping Responsibilities 7

SEC. 48.06 Registration/Disclosure Forms 8

SEC. 48.07 Registration. 8

SEC. 48.08 Disclosure Reports 10

SEC. 48.08.5 Copies of Solicitations 16

SEC. 48.08.6 Lobbying Disclosure – Political Contributions 16

SEC. 48.08.7 Lobbying Disclosure – Fundraising Activity..... 17

Sec. 48.08.8 Lobbying Disclosure – Written Communications to Neighborhood Councils 18

SEC. 48.09 Compliance Measures and Enforcement..... 19

SEC. 48.10 Ethics Commission Reports..... 21

SEC. 48.11 Severability. 21

Municipal Lobbying Ordinance

Los Angeles Municipal Code Chapter IV, Article 8
Repealed and Re-added by Ordinance No. 169916, effective 8/10/94.

SEC. 48.01. Title and Findings

A. **Title.** This Article shall be known and may be cited as the Los Angeles Municipal Lobbying Ordinance.

B. **Findings.** The following findings are adopted in conjunction with the enactment of this Article:

1. City Government functions to serve the needs of all citizens.

2. The citizens of the City of Los Angeles have a right to know the identity of interests which attempt to influence decisions of City government, as well as the means employed by those interests.

3. All persons engaged in compensated lobbying activities aimed at influencing decisions by City government must, when so engaged, be subject to the same regulations, restrictions and requirements, regardless of their background, training or other professional qualifications or license.

4. Complete public disclosure of the full range of activities by and financing of lobbyists and those who employ their services is essential to the maintenance of citizen confidence in the integrity of local government.

5. It is in the public interest to ensure that lobbyists do not misrepresent facts, their positions, or attempt to deceive officials through false communications, do not place City officials under personal obligation to themselves or their clients, and do not represent that they can control the actions of City officials.

6. It is in the public interest to adopt these amendments to the City's regulations of lobbyists to ensure adequate and effective disclosure of information about efforts to lobby City government.

History:
Amended by Ord. No. 169916, effective 8/10/94.

SEC. 48.02. Definitions

The following terms used in this Article shall have the meanings set forth below. Other terms used in this Article shall have the meanings set forth in the California Political Reform Act of 1974, as amended, and in the regulations of the California Fair Political Practices Commission, as amended, if defined therein.

"Activity expense" means any payment, including any gift, made to or directly benefiting any City official or member of his or her immediate family, made by a lobbyist, lobbying firm, or lobbyist employer.

"Agency" means the City of Los Angeles or any department, bureau, office, board, commission, other agency of the City, or any other government agency, required to adopt a conflict of interest code subject

to City Council approval, and includes the City's Community Redevelopment Agency and the Los Angeles City Housing Authority.

"At the behest" means under the control of, at the direction of, in cooperation, consultation, coordination, or concert with, at the request or suggestion of, or with the express prior consent of any elective City officer or candidate for elective City office. A donation to a religious, charitable, or other nonprofit organization is not made at the behest of an elective City officer or candidate if the donation is solicited through a newspaper publication, through radio, television, or other mass media, or through a suggestion made to the entire audience at a public gathering. A donation to a religious, charitable, or other nonprofit organization is not made at the behest of an elective City officer or candidate solely because the name of the officer or candidate is listed with other names on written materials used to request donations or the officer or candidate makes a speech to the entire audience or is honored and given an award at an event sponsored by the organization.

"Attempting to influence" means promoting, supporting, opposing or seeking to modify or delay any action on municipal legislation by any means, including but not limited to providing or using persuasion, information, statistics, analyses or studies. A person attempts to influence municipal legislation when he or she engages in lobbying activities for the purpose of influencing a decision.

"City official" means any elective or appointed City officer, member, employee or consultant (who qualifies as a public official within the meaning of the Political Reform Act) of any agency, who, as part of his or her official duties, participates in the consideration of any municipal legislation other than in a purely clerical, secretarial or ministerial capacity.

"Client" means both

(1) the person who compensates a lobbyist or lobbying firm for the purpose of attempting to influence municipal legislation and

(2) the person on whose behalf a lobbyist or lobbying firm attempts to influence such municipal legislation, even if the lobbyist or lobbying firm is compensated by another person for such representation.

However, if a lobbyist or lobbying firm represents a membership organization and individual members of that organization, an individual member is not a client solely because the member is individually represented by the lobbyist or lobbying firm unless the member makes a payment for such representation in addition to usual membership fees.

"Compensated services" means services for which compensation was paid during a reporting period or for which the lobbyist or lobbying firm became entitled to compensation during that period.

"Controlled committee" means any committee controlled by an elective City officer or candidate for any elective City office, including any campaign, officeholder, legal defense fund, or ballot measure committee.

"Direct communication" means appearing as a witness before, talking to (either by telephone or in person),

corresponding with, or answering questions or inquiries from, any City official or employee, either personally or through an agent who acts under one's direct supervision, control or direction.

"Donation" means a payment for which full and adequate consideration is not received.

"Elective city officer" means the Mayor, City Attorney, Controller and Member of the City Council.

"Elective officer" means any person who is a City Council Member, City Attorney, Controller or Mayor, whether appointed or elected.

"Fundraiser" means an individual who receives compensation to engage in fundraising activity as defined in this section.

"Fundraising activity" means soliciting a contribution or hosting or sponsoring a fundraising event or hiring a fundraiser or contractor to conduct any event designed primarily for political fundraising at which contributions for an elective City officer, candidate for elective City office, or any of his or her controlled committees are solicited, delivered or made.

"Host or sponsor" means to provide the use of a home or business to hold a political fundraising event without charging market value for the use of that location; to ask more than 25 persons to attend the event; to pay for at least a majority of the costs of the event; or to provide the candidate, campaign, committee and/or fundraiser more than 25 names to be used for invitations to the event.

"Lobbying activities" includes the following and similar compensated conduct when that conduct is related to a direct communication to influence any municipal legislation:

(1) engaging in, either personally or through an agent, written or oral direct communication with a City official;

(2) drafting ordinances, resolutions or regulations;

(3) providing advice or recommending strategy to a client or others;

(4) research, investigation and information gathering;

(5) seeking to influence the position of a third party on municipal legislation or an issue related to municipal legislation by any means, including but not limited to engaging in community, public or press relations activities; and

(6) attending or monitoring City meetings, hearings or other events.

"Lobbying entity" means a lobbyist, lobbying firm or lobbyist employer, as defined in this article.

"Lobbying firm" means any entity, including an individual lobbyist, which receives or becomes entitled to receive $1,000 or more in monetary or in-kind compensation for engaging in lobbying activities (either personally or through its agents) during any consecutive three-month period, for the purpose of attempting to influence municipal legislation on behalf of any other person, provided any partner, owner,

shareholder, officer or employee of the entity qualifies as a lobbyist. Compensation does not include reimbursement of or payment for reasonable travel expenses. An entity receives compensation within the meaning of this definition whether or not the compensation is received solely for activities regulated by this article or is received for other activities as well; however, only that portion of compensation received for the lobbying activities shall count toward the qualification threshold. An entity "**becomes entitled to receive compensation**" when the entity agrees to provide services regulated by this Article, or performs those services, whether or not payment is contingent on the accomplishment of the client's purposes.

"Lobbyist" means any individual who is compensated to spend 30 or more hours in any consecutive three-month period engaged in lobbying activities which include at least one direct communication with a City official or employee, conducted either personally or through agents, for the purpose of attempting to influence municipal legislation on behalf of any other person.

Compensation does not include reimbursement of or payment for reasonable travel expenses. A person receives compensation within the meaning of this definition whether or not the compensation is received solely for activities regulated by this Article or is received for both lobbying activities and other activities as well. However, only the compensation for the lobbying activities shall be calculated to determine whether an individual qualifies as a lobbyist. An individual "**becomes entitled to receive compensation**" when the individual or the entity in which the individual is an employee, partner, owner, shareholder or officer, agrees to provide services regulated by this Article, or performs those services, regardless of whether payment is contingent on the accomplishment of the client's purposes. A lobbyist includes a person who owns an investment in a business entity if that person attempts to influence municipal legislation on behalf of the business entity and if the person acquires the investment as compensation for his or her lobbying services or in contemplation of performing those services.

“Lobbyist employer" means an entity, other than a lobbying firm, that employs a lobbyist in-house to lobby on its behalf.

"Major filer" means any person who makes payments or incurs expenditures totaling $5,000 or more during any calendar quarter for public relations, media relations, advertising, public outreach, research, investigation, reports, analyses, studies, or similar activities, for the purpose of attempting to influence action on any proposed or pending matter of municipal legislation, if these payments or expenditures are not required to be reported on a lobbyist or lobbying firm quarterly report. A "**major filer**" does not include a lobbyist, lobbyist employer, or lobbying firm. Expenditures and payments for regularly published newsletters or other routine communications between an organization and its members shall not be counted for the purpose of this definition.

"Municipal legislation" means any legislative or administrative matter proposed or pending before any agency (as defined in this Article), including but

not limited to those involving the granting, denial, revocation, restriction or modification of a license, permit or entitlement for use (including all land use permits) if the Mayor, the City Council, any of its committees, any agency board, commission, committee, or general manager, or any agency officer or employee charged by law with holding a hearing and making a decision, is charged by law with making a final decision on the matter. However, "**municipal legislation**" does not include any of the following:

(1) A request for advice or for an interpretation of laws, regulations, City approvals or policies, or a direct response to an enforcement proceeding with the City Ethics Commission.

(2) Any ministerial action. An action is ministerial if it does not require the City official or employees involved to exercise discretion concerning any outcome or course of action.

(3) Any action relating to the establishment, amendment, administration, implementation or interpretation of a collective bargaining agreement or memorandum of understanding between an agency and a recognized employee organization, or a proceeding before the Civil Service Commission or the Employee Relations Board. Further, it does not include management decisions as to the working conditions of represented employees that clearly relate to the terms of such collective bargaining agreement or memorandum of understanding. Nevertheless, "**municipal legislation**" does include any action relating to collective bargaining taken by the City Council, any of its committees or members (including the staffs of such members), or by the Mayor or his or her office.

(4) Preparation or compilation of any radius map, vicinity map, plot plan, site plan, property owners or tenants list, abutting property owners list, photographs of property, proof of ownership or copy of lease, or neighbor signatures required to be submitted to the City Planning Department.

"Person" means any individual, business entity, trust corporation association, committee, or any other organization or group of persons acting in concert.

"Solicit" means to ask, personally or through an agent, that another person make a contribution to an elective City officer or candidate for City office, or to his or her controlled committee, including allowing one's signature to be used on a written request for funds. For purposes of this article, a lobbying entity solicits a contribution only when the lobbying entity does so

(1) at the behest of the elective City officer or candidate for elective City office, or his or her campaign treasurer, campaign manager, or member of his or her fundraising committee, or
(2) if the lobbying entity has informed the candidate or officer that the person is soliciting the contributions.

A person does not solicit, however, by making a request for funds publicly to at least a majority of persons who attend

any public gathering, or by making a request that appears published in a newspaper, on radio or television.

History:
Amended by Ord. No. 169916, effective 8/10/94.
Amended by Ord. No. 172479, effective 4/10/99.
Amended by Ord. No. 175432, effective 9/28/03.
Amended by Ord. No. 178064, effective 1/15/07.
Amended by Ord. No. 178356, effective 3/12/07.

SEC. 48.03. Exemptions

The following persons are exempt from the requirements of this Article:

A. Any public official acting in his or her official capacity, and any government employee acting within the scope of his or her employment.

B. A newspaper or other regularly published periodical, radio or television station or network, including any individual who owns, publishes or is employed by such newspaper, periodical or station or network, when, in the ordinary course of its business, it publishes or broadcasts news, editorials or other comments, or paid advertising, which directly or indirectly attempts to influence action on municipal legislation. This exemption does not apply to any other action by any such newspaper, periodical, station or network, or by any such person, to attempt to influence municipal legislation, if such activity otherwise regulated by this Article.

C. A person acting without any compensation or consideration other than reimbursement or payment of reasonable travel expenses.

D. Any person whose only activity is submitting a bid on a competitively bid contract, submitting a written response to or participating in an oral interview for a request for proposals or qualifications, or negotiating the terms of a written agreement with any City agency if selected pursuant to that bid or request for proposals or qualifications. Except with regard to persons covered by subsections E and F, this exemption shall not apply to any person who attempts to influence the action of the Mayor or Mayor's staff, any member of the City Council or their staffs, or any board or commission member with regard to any such contract.

E. Any organization exempt from federal taxation pursuant to Section 501(c)(3) of the Internal Revenue Code, which receives funding from any federal, state or local government agency for the purpose of representing the interests of indigent persons and whose primary purpose is to provide direct services to those persons, if the individual or individuals represented by the organization before any City agency provide no payment to the organization for that representation. This exemption shall not apply to direct contracts with a City official in other than a publicly noticed meeting, for the purpose of attempting to influence a City decision with regard to any City funding which the organization is seeking.

F. Any person employed by an organization described in Subsection E with respect to his or her activities as an employee of the organization.

History:
Amended by Ord. No. 169916, effective 8/10/94.

SEC. 48.04 Prohibitions

No lobbyist or lobbying firm subject to the requirements of this Article shall:

A. Do any act with the purpose and intent of placing any City official under personal obligation to the lobbyist, the lobbying firm, or to the lobbyist's or firm's employer or client.

B. Fraudulently deceive or attempt to deceive any City official with regard to any material fact pertinent to any pending or proposed municipal legislation.

C. Cause or influence the introduction of any municipal legislation for the purpose of thereafter being employed or retained to secure its passage or defeat.

D. Cause any communication to be sent to any City official in the name of any nonexistent person or in the name of any existing person without the consent of such person.

E. Make or arrange for any payment to a City official, or act as an agent or intermediary in making any such payment by any other person, if the arrangement or the payment would violate any provision of the City's Governmental Ethics Ordinance (Los Angeles Municipal Code Section 49.5.1, et seq.)

History:
Amended by Ord. No. 169916, effective 8/10/94.

SEC. 48.05. Record Keeping Responsibilities

A. Lobbying entities and major filers shall prepare and retain detailed records (including all books, papers and other documents) needed to comply with the requirements of this Article. Treasurers and fundraisers for elective City officeholders and City candidates, or for any elective City officer's or City candidate's controlled committees shall prepare and retain detailed contribution activity records for any contributions received as a result of fundraising activity engaged in by a lobbyist, lobbying firm or lobbyist employer, as defined by this article. These records shall be retained for not less than four years.

B. If a lobbying entity engages in fundraising activities as defined in Section 48.02 of this Code at the behest of a candidate or officeholder running for elective City office, the lobbying entity shall maintain records detailing any contributions that they know or have reason to know resulted from the fundraising activities.

C. If an officeholder or a candidate running for elective City office contracts with a lobbying entity to engage in fundraising activity as described in Section 48.02 of this Code, the committee treasurer and fundraiser shall maintain records detailing any contributions that they know or have reason to know resulted from the fundraising activities. The treasurer and fundraiser shall make the records available to the lobbying entity upon request of the lobbying entity.

D. If a lobbying entity delivers or sends written communications to a certified neighborhood council in an attempt to influence municipal legislation as described in Section 48.08.8 of this Article, the lobbying entity shall prepare and maintain detailed records of these written communications for not less than four years.

History:
Amended by Ord. No. 175432, effective 9/28/03.

SEC. 48.06. Filing Methods

A. All registrations, reports, and other filings required by this Article must be submitted under penalty of perjury by the person who is required to file and must be filed in a format prescribed by the Ethics Commission. The Ethics Commission must provide public access to all filings.

B. Lobbying entities and persons who qualify as lobbying entities must file registrations, quarterly reports, terminations and amendments to those filings electronically.

C. If an electronic filing is required, the Ethics Commission must provide a unique identifier to the person who is required to file, to be used in place of a physical signature for submitting and verifying data under penalty of perjury. All electronic filings are presumed to be filed under penalty of perjury by the person required to file.

D. If a paper filing is required, it must contain the physical signature of the person who is required to file. A document is considered filed on the earlier of the date of receipt by the Ethics Commission or the date of the postmark if it is mailed and bears the correct address and postage.

History:
Amended by Ord. No. 177105, effective 12/18/05.
Amended by Ord. No. 182360, effective 1/30/13.

SEC. 48.07. Registration

A. **Requirement.** An individual who qualifies as a lobbyist shall register with the City Ethics Commission within 10 days after the end of the calendar month in which the individual qualifies as a lobbyist. A person, including an individual lobbyist, shall register with the City Ethics Commission as a lobbying firm within 10 days after the end of the calendar month in which a partner, owner, shareholder, officer or employee qualifies as a lobbyist. If a person is not registered as a lobbyist or lobbying firm, but is performing acts which would require that person to so register, that person may continue to act as a lobbyist or lobbying firm so long as the person registers with the City Ethics Commission within 10 days after the person knew or should have known of the obligation to register. A lobbyist or lobbying firm shall register each client on whose behalf or from which the lobbyist or lobbying firm receives or becomes entitled to receive $250 or more in a calendar quarter for engaging in lobbying activities related to attempting to influence municipal legislation.

B. **Duration of Status.** A person who registers as a lobbyist or lobbying firm shall retain that status through December 31 of that year unless and until that person terminates the status as set forth below.

C. **Registration Fees.** Every lobbyist shall pay an annual registration fee of $450 plus $75 for each client on whose behalf or from which the lobbyist receives or becomes entitled to receive $250 or more in a calendar quarter. Persons who initially register during the last quarter of a calendar year (October through December) shall pay prorated registration fees of $337 for each lobbyist plus $56 for each client.

D. **Contents of Registration Statements — Lobbyists.** Registration statements of lobbyists shall contain the following:

1. The lobbyist's name, business address, business email, and business telephone number.

2. The lobbying firm, if any, of which the lobbyist is an employee, partner, officer or owner.

3. If the lobbyist is not an employee, partner, officer or owner of a lobbying firm, the name, address and telephone number of the lobbyist's employer.

4. Each City agency that the lobbyist has the authority to attempt to influence on behalf of any client or employer.

5. A statement that the lobbyist has reviewed and understands the requirements of this Article.

6. Any other information required by regulation of the City Ethics Commission, consistent with the purposes and provisions of this Article.

E. **Contents of Registration Statements — Lobbying Firms** Registration statements of lobbying firms (including individual contract lobbyists) shall contain the following:

1. The name, address, email, and telephone number of the firm.

2. The name of each lobbyist who is a partner, owner, shareholder, officer or employee of the firm.

3. For each client on whose behalf or from which the firm received or became entitled to receive $250 in compensation during the calendar quarter for engaging in lobbying activities related to attempting to influence municipal legislation within the meaning of this Article:

(a) The client's name, business or residence address, and business or residence telephone number.

(b) The period during which the representation will occur.

(c) The item or items of municipal legislation for which the firm was retained to represent the client, or, if no specific items of municipal legislation for which the firm was retained to represent the client can be identified, a description of the types of municipal legislation for which the firm was retained to represent the client.

(d) Each City agency that the lobbying firm has the authority to attempt to influence on behalf of the client.

(e) In the case of a lobbyist who is an individual contract lobbyist, a

statement that he or she has reviewed and understands the requirements of this Article.

(f) The name, address, email, and telephone number of the person responsible for preparing the statement.

(g) Any other information required by regulation of the City Ethics Commission, consistent with the purposes and provisions of this Article.

F. **Amendments to Registrations.** Lobbyists and lobbying firms shall file amendments to their registration statements within 10 days of any change in information required to be set forth on the registration statement.

G. **Termination.** Any person registered under this Article shall file a termination statement with the City Ethics Commission within 20 days after ceasing all activity governed by this Article.

H. **Education Requirement.** Every individual who is required to register as a lobbyist shall attend a City lobbying information session conducted by the City Ethics Commission no less than once every two calendar years, according to the following schedule:

(1) An individual who has not registered as a lobbyist in the immediately preceding two calendar years shall attend a City lobbying information session within six months of his or her registration date as a lobbyist.

(2) A registered lobbyist who did not attend a City lobbying information session during the previous calendar year shall attend a City lobbying session by the end of the current calendar year.

(3) A registered lobbyist who attends a City lobbying information session during the current calendar year is not required to attend a City lobbying information session during the following calendar year.

History:
Amended by Ord. No. 172479, effective 4/10/99.
Amended by Ord. No. 175028, effective 2/5/03.
Amended by Ord. No. 182360, effective 1/30/13.

SEC. 48.08. Disclosure Reports

A. **Reporting Requirement.** Every lobbyist, lobbying firm, lobbyist employer and major filer shall file the quarterly disclosure reports required by this Section on or before the last day of the month following each calendar quarter.

1. All lobbyists and lobbying firms shall file quarterly reports for every calendar quarter during which they retain that status. An individual who qualifies both as a lobbyist and lobbying firm shall file only a lobbying firm quarterly report. Lobbyist employers shall file quarterly reports for every calendar quarter during which any individual employed by that employer retains the status as lobbyist. Information required to be disclosed concerning compensation received or expenditures made for lobbying shall be disclosed either by the lobbyist or by his or her lobbying firm or employer.

2. Major filers shall file quarterly reports for every calendar quarter

during which they made qualifying payments or incurred qualifying expenditures totaling $5,000 or more.

3. Quarterly reports shall disclose all required information for the calendar quarter immediately prior to the month in which the report is required to be filed.

B. **Quarterly Reports by Lobbyists — Contents.** Quarterly reports by lobbyists shall contain the following information:

1. The lobbyist's name, business address and business telephone number.

2. The lobbying firm, if any, of which the lobbyist is a partner, owner, shareholder, officer or employee.

3. If the lobbyist is not a partner, officer or owner of a lobbying firm, the name, address and telephone number of the lobbyist's employer.

4. The date, amount and description of each activity expense of $25 or more made by the lobbyist during the reporting period, the name and title of the City official benefiting from the expense, the name and address of the payee, and the client, if any, on whose behalf the expense was made. An activity expense shall be considered to be made on behalf of a client if the client requested or authorized the expense or if the expense was made in connection with an event at which the lobbyist attempted to influence the official on behalf of the client.

5. The total amount of activity expenses made by the lobbyist during the reporting period, whether or not itemized.

6. The name of any elective City officer, candidate for elective City office, or any controlled committee of the officer or candidate to which the lobbyist made contributions of $100 or more, or which were delivered by the lobbyist, or in connection with which the lobbyist acted as an intermediary during the reporting period, and the date and amount of the contribution.

7. The name of any elective City officer, candidate for elective City office, or any City controlled committee of the officer or candidate for which the lobbyist engaged in any fundraising activity during the reporting period, the date(s) of the activity and the amount of funds the lobbyist knows or has reason to know were raised as a result of the activity.

8. The date and amount of one or more contributions aggregating more than $1,000 made by the lobbyist at the behest of an elective City officer or candidate for elective City office during the reporting period to any and all controlled committees of any other elective City officer or candidate for elective City office, the name and address of the payee, the name of the elective City officer or candidate for elective City office who made the behest and the date of the behest.

9. The date, amount and description of one or more donations aggregating

$1,000 or more made by the lobbyist at the behest of an elective City officer or candidate for elective City office during the reporting period to any religious, charitable or other nonprofit organization, the name and address of the payee, the name of the elective City officer or candidate for elective City office who made the behest and the date of the behest.

10. If, during the quarterly reporting period, the lobbyist provided compensated services, including consulting services, to the campaign of any candidate for elective City office, or to a campaign for or against any City ballot measure, the name of the candidate, the elective City office sought by the candidate, the ballot number or letter of the ballot measure, the date of the election, the amount of compensation earned for the compensated services, and a description of the nature of the services provided. Such information shall be reported if the lobbyist personally provided the services, or if the services were provided by a business entity in which the lobbyist owns at least a 10% investment, whether the compensation was provided directly to the lobbyist or to such business entity.

11. If, during the quarterly reporting period, the lobbyist provided compensated services under contract with the City or with any City agency, including consulting services, the amount of compensation received, the agency for which the services were provided, a description or other identification of the contract and the nature of the services provided. Such information shall be reported if the lobbyist personally provided the services, or if the services were provided by a business entity in which the lobbyist owns at least a 10% investment, whether the compensation was provided directly to the lobbyist or to such business entity.

12. Each City agency that the lobbyist attempted to influence.

13. Any other information required by regulation of the City Ethics Commission, consistent with the purposes and provisions of this Article.

C. **Quarterly Reports by Lobbying Firms — Contents.** Quarterly reports by lobbying firms, including individual contract lobbyists, shall contain the following information:

1. The name, address, email, and telephone number of the firm.

2. The name of each lobbyist who is a partner, owner, shareholder, officer or employee of the firm.

3. The name, address and telephone number of each client that is required to be registered and was represented by the firm during the reporting period; a description of each item of municipal legislation for which the firm or its lobbyists represented the client during the reporting period; the total amount of payments received by the firm from each client (including all fees, reimbursements for expenses and

other payments) during the reporting period for such representation.

4. The total payments received from clients required to be registered by the firm during the reporting period in connection with the firm's representation of clients on municipal legislation.

5. The date, amount and description of each activity expense of $25 or more made by the lobbying firm during the reporting period, the name and title of the City official benefiting from the expense, the name and address of the payee, and the client, if any, on whose behalf the expense was made. An activity expense shall be considered to be made on behalf of a client if the client requested or authorized the expense or if the expense was made in connection with an event at which the lobbying firm attempted to influence the official on behalf of the client.

6. The total amount of activity expenses made by the lobbying firm during the reporting period, whether or not itemized.

7. The total amount of expenses incurred in connection with attempts by the firm to influence municipal legislation. These expenses shall include:

   (a) total payments to lobbyists employed by the firm;

   (b) total payments to employees of the firm, other than lobbyists, who engaged in attempts to influence municipal legislation during the reporting period; and

   (c) all expenses attributable to attempts to influence municipal legislation, other than overhead, and other expenses that would not be incurred but for the attempts to influence. Each such expense of $5,000 or more shall be itemized and described.

8. The name of any elective City officer, candidate for elective City office, or any controlled committee of the officer or candidate to which the lobbying firm made contributions of $100 or more, or which were delivered by the lobbying firm, or in connection with which the lobbying firm acted as an intermediary during the reporting period, and the date and amount of the contribution.

9. The name of any elective City officer, candidate for elective City office, or any City controlled committee of the officer or candidate for which the lobbying firm engaged in any fundraising activity during the reporting period, the date(s) of the activity and the amount of funds the lobbying firm knows or has reason to know were raised as a result of the activity.

10. The date and amount of one or more contributions aggregating more than $1,000 made by the lobbying firm at the behest of an elective City officer or candidate for elective City office during the reporting period to any and all controlled committees of any other elective City officer or candidate for elective City office, the name and

address of the payee, the name of the elective City officer or candidate for elective City office who made the behest and the date of the behest.

11. The date, amount and description of one or more donations aggregating $1,000 or more made by the lobbying firm at the behest of an elective City officer or candidate for elective City office during the reporting period to any religious, charitable or other nonprofit organization, the name and address of the payee, the name of the elective City officer or candidate for elective City office who made the behest and the date of the behest.

12. If, during the quarterly reporting period, the lobbying firm provided compensated services, including consulting services, to the campaign of any candidate for elective City office, or to a campaign for or against any City ballot measure, the name of the candidate, the elective City office sought by the candidate, the ballot number or letter of the ballot measure, the date of the election, the amount of compensation earned for the compensated services and a description of the services provided.

13. If, during the quarterly reporting period, the lobbying firm provided compensated services under contract with the City or with any agency, including consulting services, the amount of compensation received, the agency for which the services were provided, a description or other identification of the contract and the nature of the services provided. For an individual contract lobbyist who qualifies as a lobbying firm, such information shall be reported if the lobbyist personally provided the services, or if the services were provided by a business entity in which the lobbyist owns at least a 10% investment, regardless of whether the compensation was provided directly to the lobbyist or to such business entity.

14. For an individual contract lobbyist who qualifies as a lobbying firm, each City agency that the lobbyist attempted to influence.

15. The name, address, email, and telephone number of the person responsible for preparing the report.

16. Any other information required by regulation of the City Ethics Commission, consistent with the purposes and provisions of this Article.

D. **Quarterly Reports by Lobbyist Employers — Contents.** Quarterly reports by lobbyist employers shall contain the following information.

1. The name, address, email, and telephone number of the entity filing the report.

2. The name of each lobbyist who is employed by the entity.

3. Total payments during the reporting period to lobbyists employed by the entity. Such payments shall include solely payments for compensation and reimbursement of expenses relating to the lobbyists' attempts to influence municipal legislation.

4. Total payments to employees of the entity, other than lobbyists, who engaged in attempts to influence municipal legislation during the reporting period. Such payments shall include payments for compensation and reimbursement of expenses relating to such persons' attempts to influence municipal legislation.

5. Total payments for expenses incurred in connection with attempts by the entity during the reporting period to influence municipal legislation. These expenses shall include all expenses attributable to attempts to influence municipal legislation, other than overhead, and other expenses that would not be incurred but for the attempts to influence. Each such expense of $5,000 or more shall be itemized and described.

6. A description of each item of municipal legislation which the entity attempted to influence during the reporting period.

7. The date, amount and description of each activity expense of $25 or more made by the lobbyist employer during the reporting period, the name and title of the City official benefiting from the expense, and the name and address of the payee.

8. The total amount of activity expenses made by the lobbyist employer during the reporting period, whether or not itemized.

9. The name of any elective City officer, candidate for elective City office, or any controlled committee of the officer or candidate to which the lobbyist employer made contributions of $100 or more, or which were delivered by the lobbyist employer, or in connection with which the lobbyist employer acted as an intermediary during the reporting period, and the date and amount of the contribution.

10. The name of any elective City officer, candidate for elective City office, or any City controlled committee of the officer or candidate for which the lobbyist employer engaged in any fundraising activity during the reporting period, the date(s) of the activity and the amount of funds the lobbyist employer knows or has reason to know were raised as a result of the activity.

11. The date and amount of one or more contributions aggregating more than $1,000 made by the lobbyist employer at the behest of an elective City officer or candidate for elective City office during the reporting period to any and all controlled committees of any other elective City officer or candidate for elective City office, the name and address of the payee, the name of the elective City officer or candidate for elective City office who made the behest and the date of the behest.

12. The date, amount and description of one or more donations aggregating $1,000 or more made by the lobbyist employer at the behest of an elective City officer or candidate for elective City office during the reporting period to any religious, charitable or other nonprofit

organization, the name and address of the payee, the name of the elective City officer or candidate for elective City office who made the behest and the date of the behest.

13. The name, address, email, and telephone number of the person responsible for preparing the report.

14. Any other information required by regulation of the City Ethics Commission, consistent with the purposes and provisions of this Article.

E. **Quarterly Reports by Major Filers — Contents.** Quarterly reports by major filers shall contain the following information:

1. The name, address and telephone number of the person filing the report.

2. A description of each item of municipal legislation which the entity attempted to influence during the reporting period.

3. The total payments made during the reporting period for the purpose of attempting to influence action on each proposed or pending matter of municipal legislation.

4. The name, address and telephone number of the person responsible for preparing the report.

5. Any other information required by regulation of the City Ethics Commission, consistent with the purposes and provision of this Article.

History:
Amended by Ord. No. 175432 effective 9/28/03.
Renumbered by Ord. No.175432 effective 9/28/03.
Amended by Ord. No. 182360, effective 1/30/13.

SEC. 48.08.5. Copies of Solicitations

Each lobbying entity that produces, pays for, mails or distributes more than 50 substantially similar copies of a written political fundraising solicitation for any controlled committee of an elective City officer or candidate relating to seeking or holding City elective office or supporting or opposing a City ballot measure shall send a copy of the solicitation to the City Ethics Commission for public access, at the time the solicitation is sent or otherwise distributed, and shall report on its next quarterly report the date(s) on which it is mailed or distributed and a general description of the content of the solicitation, the number of pieces mailed or distributed, and name of the elective City officer, or candidate or City ballot measure committee for which the funds were solicited.

History:
Added by Ord. No. 175432, effective 9/28/03.

SEC. 48.08.6. Lobbying Disclosure — Political Contributions

A. Each lobbying entity, which makes one or more contributions to an elective City officer and/or to any or all of his or her controlled committees, shall file a notice with the City Ethics Commission each time the making of a contribution results in the lobbying entity having made contributions aggregating more than $7,000 to the officer and/or his or her controlled committees within the past 12 months. The notice shall be filed on a form prescribed by the Commission

within one business day after making a contribution that triggers the filing requirement. The notice shall contain the following information:

1. The name, address and telephone number of the filer, the name of the elective City officer, and/or any or all of his or her controlled committees, to which the lobbying entity made contributions aggregating more than $7,000 during the past twelve months, and the date and amount of each contribution.

2. For purposes of this section, a "controlled committee" does not include any committee controlled by an elective City officer that is

   (a) formed to support or oppose a ballot measure or

   (b) formed to support the election of that officer to other than elective City office.

B. The original notice shall be filed with the City Ethics Commission, and copies shall be filed with the City Clerk and the elective City officer involved. Each notice may only include information relative to one elective officer.

C. The form shall be considered filed on the date of the postmark or on the date of delivery to the City Ethics Commission, whichever is earlier.

D. The form shall be verified under penalty of perjury by the individual filing it or by an officer of the entity authorized to file it.

E. The City Ethics Commission shall post the information in the notice on its website within one business day of its receipt of the notice. The City Clerk shall make the notice available for inspection within one business day of its receipt.

History:
Added by Ord. No. 175432, effective 9/28/03.

SEC. 48.08.7. Lobbying Disclosure — Fundraising Activity

A. Every lobbying entity who within any 12 month period (i) engaged in fundraising activities on behalf of an elective City officer and/or any and all of his or her controlled committees, and which knows or has reason to know that the fundraising activities resulted in contributions, and/or (ii) delivered or acted as an intermediary for one or more contributions to the elective City officer and/or any and all of his or her controlled committees, shall file a notice with the City Ethics Commission any time the activities identified in (i) and/or (ii) aggregate more than $15,000 in the case of a member of the City Council, or more than $35,000 in the case of the Mayor, City Attorney, or Controller. The notice shall be filed on a form prescribed by the City Ethics Commission within one business day after any of these thresholds is exceeded. The notice shall contain the following information:

1. The name, address and telephone number of the filer, the name of the elective City officer, and/or any or all of his or her controlled committees, on whose behalf the lobbying entity engaged in fundraising activities, or

delivered or acted as intermediary for one or more contributions to the elective City officer and/or any and all of his or her controlled committees, the date of the fundraising activity, and the amount of contributions raised, delivered or in connection with which the lobbying entity acted as an intermediary.

2. For purposes of this section, a "controlled committee" does not include any committee controlled by an elective City officer that is

   (a) formed to support or oppose a ballot measure or

   (b) formed to support the election of that officer to other than elective City office.

3. For purposes of this notification, if a fundraising event is sponsored or hosted by more than one person, the amount of contributions received at or as a result of the event shall be attributed to each lobbying entity who hosted or sponsored the event according to the amount of the contributions that resulted from that lobbying entity's fundraising activities. If a contribution results from the fundraising of more than one person and/or lobbying entity, that contribution shall be apportioned equally to each of the persons and/or lobbying entity that engaged in the fundraising activity.

B. The original notice shall be filed with the City Ethics Commission, and copies shall be filed with the City Clerk and the elective City officer involved. Each notice may only include information relative to one elective officer.

C. The form shall be considered filed on the date of the postmark or on the date of delivery to the City Ethics Commission, whichever is earlier.

D. The form shall be verified under penalty of perjury by the individual filing it or by an officer of the entity authorized to file it.

E. The City Ethics Commission shall post the information in the notice on its website within one business day of its receipt of the notice. The City Clerk shall make the notice available for inspection within one business day of its receipt.

History:
Added by Ord. No. 175432, effective 9/28/03.

Sec. 48.08.8. Lobbying Disclosure — Written Communications to Neighborhood Councils

(a) No lobbying entity registered with the City of Los Angeles shall deliver or send to a certified neighborhood council a written communication on behalf of a client, including, but not limited to, letters, faxes, electronic messages, and flyers, without a disclosure indicating that the communication was delivered or sent by that lobbying entity.

(b) For purposes of subsection (a), the required disclosure shall be printed clearly and legibly in no less than 8-point type in a color or print that contrasts with the background so as to be legible and shall be presented in a clear and conspicuous manner in

the written communication. The disclosure shall include all of the following information applicable to the written communication:

(1) The name of the lobbyist(s) that prepares, delivers or sends the written communication;

(2) The name of the registered lobbying firm(s) or lobbyist employer(s) who employs the lobbyist(s) that prepares, delivers or sends the written communication; and,

(3) The name of the client or clients on whose behalf the lobbying entity prepares, delivers, or sends the written communication in an attempt to influence municipal legislation.

History:
Added by Ord. No. 176034, effective 7/26/04.

SEC. 48.09 Compliance Measures and Enforcement

A. **Audits.** The City Ethics Commission shall have the authority to conduct audits of reports and statements filed pursuant to this Article. Such audits may be conducted on a random basis or when the City Ethics Commission staff has reason to believe that a report or statement may be inaccurate or has not been filed.

B. **Criminal Penalties.**

1. Any person who knowingly or willfully violates any provision of this Article is guilty of a misdemeanor. Any person who knowingly or willfully causes any other person to violate any provision of this article, or who knowingly or willfully aides and abets any other person in violation of any provision of this article, is guilty of a misdemeanor.

2. Prosecution for violation of any provision of this article must be commenced within one year after the date on which the violation occurred.

3. No person convicted of a violation of this Article may act as a lobbyist or otherwise attempt to influence municipal legislation for compensation for one year after such conviction.

C. **Civil Enforcement.**

1. Any person who knowingly violates any provision of Section 48.04 shall be liable in a civil action brought by the City Attorney. Any person who intentionally or negligently violates any other provisions of this Article shall be liable in a civil action brought by the City Attorney. Failure to properly report any receipt or expenditure may result in civil penalties not to exceed the amount not properly reported, or $2,000, whichever is greater. Any other violation may result in civil penalties no greater than $2,000. If the court determines that a violation was intentional, the court may order that the defendant be prohibited from acting as a lobbyist or otherwise attempting to influence municipal legislation for one year.

2. In determining the amount of liability pursuant to this subsection, the court shall take into account the seriousness of the violation and the

degree of culpability of the defendant.

3. If two or more persons are responsible for any violation, they shall be jointly and severally liable.

4. No civil action alleging a violation of this Article shall be filed more than four years after the date the violation occurred.

D. **Injunction.** The City Attorney on behalf of the people of the City of Los Angeles may seek injunctive relief to enjoin violations of or to compel compliance with the provisions of this article.

E. **Administrative Penalties.** The City Ethics Commission may impose penalties and issue orders for violation of this Article pursuant to its authority under Charter Section 706(c).

F. **Late Filing Penalties.** In addition to any other penalty or remedy available, if any person fails to file any report or statement required by this Article, after any deadline imposed by this Article, such person shall be liable to the City Ethics Commission in the amount of twenty-five dollars ($25) per day after the deadline until the statement or report is filed, up to a maximum amount of $500. Liability need not be enforced by the Commission if its Executive Officer determines that the late filing was not willful and that enforcement of the penalty would not further the purposes of this Article. No liability shall be waived if a statement or report is not filed within 10 days after the Commission has sent specific written notice to the filer of the filing requirement.

G. **Restriction on Person Who Violates Certain Laws.**

1. No person shall act or continue to act as a registered lobbyist or lobbying firm if, within the prior four years, that person has been found by the City Ethics Commission, in a proceeding pursuant to Charter Section 706, to have violated City Charter Section 470(k) on any occasion. That determination shall be based either on a finding of the City Ethics Commission made after an administrative hearing or on a stipulation by the lobbyist or lobbying firm entered into with the City Ethics Commission within the previous four years.

2. If the City Ethics Commission makes a finding that the person has either

(1) accepted responsibility for the violation in the form of having entered into a stipulation with the City Ethics Commission in which the party admits the violation, or otherwise exhibits evidence of having accepted such responsibility, or

(2) mitigated the wrongdoing by taking prompt remedial or corrective action, then the City Ethics Commission may reduce the time period during which the above prohibition would apply to a period of not less than one year.

H. **Contract Bidder Certification of Compliance With Lobbying Laws.**

1. Any bidder for a contract, as those terms are defined in Los Angeles Administrative Code Section 10.40.1, shall submit with its bid a certification, on a form prescribed by the City Ethics Commission, that the bidder acknowledges and agrees to comply with the disclosure requirements and prohibitions established in the Los Angeles Municipal Lobbying Ordinance if the bidder qualifies as a lobbying entity under Section 48.02 of this article. The exemptions contained in Section 48.03 of this article and Los Angeles Administrative Code Section 10.40.4 shall not apply to this subsection.

2. Each agency shall include the Municipal Lobbying Ordinance in each invitation for bids, request for proposals, request for qualifications, or other solicitation related to entering into a contract with the City. The ordinance must be provided in at least 10-point font and may be provided on paper, in an electronic format, or through a link to an online version of the ordinance. The ordinance is not required to be printed in a newspaper notice of the solicitation.

3. This subsection does not apply to the renewal, extension, or amendment of an existing contract, as long as the solicitation for the original contact met the requirements in Paragraphs 1 and 2 above and the renewal, extension, or amendment does not involve a new solicitation.

4. For purposes of this subsection, "agency" does not include a state agency operating solely within the City such as the Community Redevelopment Agency or Los Angeles City Housing Authority.

History:
Amended by Ord. No. 169916, effective 8/10/94.
Amended by Ord. No. 171142, effective 8/3/96.
Amended by Ord. No. 172942, effective 1/21/00.
Amended by Ord. No. 178064, effective 1/15/07.
Amended by Ord. No. 179934, effective 7/21/08.

SEC. 48.10. Ethics Commission Reports

As soon as practicable after the close of each quarterly reporting period, the City Ethics Commission shall prepare a report to the Mayor and City Council of lobbying activity which occurred during the reporting period. Such report shall be in a form which, in the opinion of the Commission, best describes the activities, receipts and expenditures of persons subject to the requirements of this article.

History:
Added by Ord. No. 169916, effective 8/10/94.

SEC. 48.11. Severability

If any provision of this article, or its application to any person or circumstance, is held invalid by any court, the remainder of this article and its application to other persons and circumstances, other than that which has been held invalid, shall not be affected by such invalidity, and to that extent the provisions of this article are declared to be severable.

History:
Added by Ord. No. 169916, effective 8/10/94.

. . . .

FORM
50

Bidder Certification

Los Angeles City
ETHICS COMMISSION

This form must be submitted with your bid or proposal to the City department that is awarding the contract noted below. If you have questions about this form, please contact the Ethics Commission at (213) 978-1960.

☐ **Original Filing** ☐ **Amendment:** Date of Signed Original _____. Date of Last Amendment _____.

Reference Number (Bid, Contract, or BAVN)	Awarding Authority (Department awarding the contract)
Bidder Name	
Address	
Email Address	Phone Number

Certification

I certify the following on my own behalf or on behalf of the entity named above, which I am authorized to represent:

A. I am applying for one of the following types of contracts with the City of Los Angeles:

1. A goods or services contract with a value of more than $25,000 and a term of at least three months;
2. A construction contract with any value and duration;
3. A financial assistance contract, as defined in Los Angeles Administrative Code § 10.40.1(h), with a value of at least $100,000 and a term of any duration; or
4. A public lease or license, as defined in Los Angeles Administrative Code § 10.40.1(i), with any value and duration.

B. I acknowledge and agree to comply with the disclosure requirements and prohibitions established in the Los Angeles Municipal Lobbying Ordinance if I qualify as a lobbying entity under Los Angeles Municipal Code § 48.02.

I certify under penalty of perjury under the laws of the City of Los Angeles and the state of California that the information in this form is true and complete.

_____ Name

_____ Signature

_____ Title

_____ Date

Iran Contracting Act of 2010 - Implementation and Processing Procedures

Overview:

The Iran Contracting Act of 2010 prohibits bidders engaged in investment activities in Iran, from bidding, submitting proposal for, entering into or renewing contracts with the City for goods and services of $1,000,000 or more.

A bidder or proposer who engages in investment activities in Iran is defined as either:

1. A bidder or proposer providing goods or services of $20,000,000 or more in the energy sector of Iran, including provision of oil or liquefied natural gas tankers, or products used to construct or maintain pipelines used to transport oil or liquefied natural gas, for the energy sector or Iran; OR

2. A bidder that is a financial institution that extends twenty million dollars $20,000,000 or more in credit to another person, for 45 days or more, if that person will use the credit to provide goods or services in the energy sector in Iran and is identified on the list created by the State of California, Department of General Services (DGS) as a person engaging in the investment activities in Iran.

All bidders or proposers for department contracts of $1,000,000 or more shall certify that they are not identified on the DGS list of ineligible businesses or persons, and that they are **not** engaged in investment activities in Iran by signing and submitting the *Iran Contracting Act of 2010 Compliance Affidavit.*

Implementation & Processing:

- All bidders or proposers for a Department contract valued at $1,000,000 or more must sign and submit the *Iran Contracting Act of 2010 Compliance Affidavit* with their bid or proposal.

- Upon receiving the bid or proposal, the awarding authority contract administrator must review the submitted affidavit for completion and signature and check the DGS list of businesses that are prohibited from contracting with public entities in California. The link for the DGS list is: https://www.dgs.ca.gov/PD/Resources/Page-Content/Procurement-Division-Resources-List-Folder/List-of-Ineligible-Businesses?search=iran%20contracting
    - Once the review is complete, the contract administrator will place the affidavit in the awarding authority's official file associated with the proposal, or such other place as is designated by the awarding authority's general manager for safe recordkeeping.

- In the event that the awarding authority intends to award a contract valued at $1,000,000 or more, outside of the competitive process, the awarding authority must complete the evaluation process described above prior to executing the contract.

Any questions regarding the Iran Contracting Act of 2010 may be directed to the State of California, Department of General Services, Office of Policies, Procedures, and Legislation (OPPL) at PPO@dgs.ca.gov. For more information, the webpage for the OPPL is located at www.dgs.ca.gov/pd/Resources/PDLegislation.aspx.

IRAN CONTRACTING ACT OF 2010 COMPLIANCE AFFIDAVIT

(California Public Contract Code Sections 2200-2208)

The California Legislature adopted the Iran Contracting Act of 2010 to respond to policies of Iran in a uniform fashion (PCC § 2201(q)). The Iran Contracting Act prohibits bidders engaged in investment activities in Iran from bidding on, submitting proposals for, or entering into or renewing contracts with public entities for goods and services of one million dollars ($1,000,000) or more (PCC § 2203(a)). A bidder who "engages in investment activities in Iran" is defined as either:

1. A bidder providing goods or services of twenty million dollars ($20,000,000) or more in the energy sector of Iran, including provision of oil or liquefied natural gas tankers, or products used to construct or maintain pipelines used to transport oil or liquefied natural gas, for the energy sector of Iran; **or**
2. A bidder that is a financial institution (as that term is defined in 50 U.S.C. § 1701) that extends twenty million dollars ($20,000,000) or more in credit to another person, for 45 days or more, if that person will use the credit to provide goods or services in the energy sector in Iran and is identified on a list created by the California Department of General Services (DGS) pursuant to PCC § 2203(b) as a person engaging in the investment activities in Iran.

The bidder shall certify that at the time of submitting a bid for new contract or renewal of an existing contract, the bidder is **not** identified on the DGS list of ineligible businesses or persons and that the bidder is **not** engaged in investment activities in Iran in violation of the Iran Contracting Act of 2010.

California law establishes penalties for providing false certifications, including civil penalties equal to the greater of $250,000 or twice the amount of the contract for which the false certification was made; contract termination; and three-year ineligibility to bid on contracts (PCC § 2205).

To comply with the Iran Contracting Act of 2010, the bidder shall provide its vendor or financial institution name, and City Business Tax Registration Certificate (BRTC) if available, in completing **ONE** of the options shown below.

OPTION #1: CERTIFICATION

I, the official named below, certify that I am duly authorized to execute this certification on behalf of the bidder or financial institution identified below, and that the bidder or financial institution identified below is **not** on the current DGS list of persons engaged in investment activities in Iran and is **not** a financial institution extending twenty million dollars ($20,000,000) or more in credit to another person or vendor, for 45 days or more, if that other person or vendor will use the credit to provide goods or services in the energy sector in Iran and is identified on the current DSG list of persons engaged in investment activities in Iran.

Vendor Name/Financial Institution (printed)		***BTRC (or n/a)***
By (Authorized Signature)		
Print Name and Title of Person Signing		
Date Executed	***City Approval (Signature)***	***(Print Name)***

OPTION #2: EXEMPTION

Pursuant to PCC § 2203(c) and (d), a public entity may permit a bidder or financial institution engaged in investment activities in Iran, on a case-by-case basis, to be eligible for, or to bid on, submit a proposal for, or enter into, or renew, a contract for goods and services. If the bidder or financial institution identified below has obtained an exemption from the certification requirement under the Iran Contracting Act of 2010, the bidder or financial institution shall complete and sign below and attach documentation demonstrating the exemption approval.

Vendor Name/Financial Institution (printed)		***BTRC (or n/a)***
By (Authorized Signature)		
Print Name and Title of Person Signing		
Date Executed	***City Approval (Signature)***	***(Print Name)***

Department of General Services
Procurement Division
707 Third Street, Second Floor, West Sacramento, CA 95605
(916) 375-4400 (800) 559-5529

List Date: August 5, 2020

Entities Prohibited from Contracting with Public Entities in California per the Iranian Contracting Act, 2010

1. China National Petroleum Corporation
2. China Oilfield Services Limited
3. Indian Oil Corporation Ltd.
4. Oil and Natural Gas Corporation
5. Oil India Limited
6. ONGC Videsh Ltd.
7. Petrofield
8. Petróleos de Venezuela, S.A
9. Sinopec
10. SKS Ventures

If you have any questions regarding this notification, please contact:

Office of Policies, Procedures, and Legislation
PPO@dgs.ca.gov

CALIFORNIA STATE SENATE BILL 854

Contractors are advised of the following changes made by California State Senate Bill 854 to the State of California Department of Industrial Relations:

1. No contractor or subcontractor may be listed on a bid proposal for a public works project (submitted on or after March 1, 2015) unless registered with the California Department of Industrial Relations (DIR) pursuant to Labor Code section 1725.5 [with limited exceptions from this requirement for bid purposes only under Labor Code section 1771.1(a)].

2. No contractor or subcontractor may be awarded a contract for public work on a public works project (awarded on or after April 1, 2015) unless registered with the DIR pursuant to Labor Code section 1725.5.

3. DIR maintains a current list of registered contractors. https://efiling.dir.ca.gov/PWCR/Search.action

The Contractor must comply with the requirements of THE California State Senate Bill 854. Please read the following attachment for more information.

Senate Bill 854

1. All contractors and subcontractors who bid, or work on a public works project must register with the state and pay an annual fee of $300.00 to the Department of Industrial Relations (DIR). In order to register, contractors must have valid workers compensation insurance; they must not have any outstanding assessments owed to either the state or any other warding body, or to any workers; and they cannot be debarred on any list (either federal, state, or local).

2. No contractor or subcontractor may be listed on a bid proposal (submitted on or after March 1, 2015) for a public works project unless they are registered with the DIR pursuant to Labor Code Section 1725.5.

3. No contractor or subcontractor may be awarded a contract on a public works project (awarded on or after April 1, 2015) unless they are registered with the DIR pursuant to Labor Code Section 1725.5.

4. No contractor or subcontractor may work on a contract on a public works project (bid on or after March 1, 2015, or awarded on or after April 1, 2015) unless they are registered with the DIR.

5. An awarding body may not accept a bid or enter into a contract for public works with an unregistered contractor.

6. The DIR maintains a current list of registered contractors at: https://efiling.dir.ca.gov/PWCR/Search.action.

7. While the new law does require that all contractors and subcontractors must furnish electronic certified payroll records (ECPR) directly to the Labor Commissioner's Office, contractors and subcontractors working on City of Los Angeles public works projects (as well as those working for three other select awarding bodies, and projects covered by qualifying project labor agreements) are exempt from this requirement. (Note: Any contractor working on a project for a City department or agency which does not utilize the Bureau of Contract Administration's services ***must*** submit their payrolls through the state's ECPR system to the Labor Commissioner's Office ***and*** submit the project to the state for monitoring and enforcement. The new law will apply to any project awarded by a City department for constriction, alteration, installation, demolition, maintenance, or repair.

8. Violation of the requirements mandated by SB 854 will result in any public works contract entered into with any contractor or subcontractor who has not registered being subject to cancellation.

9. A contractor who fails to pay the renewal fee on or before the expiration of the prior period of registration shall be prohibited from bidding on or engaging in the performance of any contract for the public work until they are once again registered. If the failure to pay the renewal fee was inadvertent, the contractor may renew its registration retroactively by paying an additional penalty renewal fee equal to the amount of the renewal fee within 90 days of the due date of the renewal fee. (If the original renewal fee was $300.00, the total amount for renewal including the penalty renewal fee would be $600.00.)

10. If the renewal fee is paid subsequent to 90 days, the contractor will be eligible to bid on public works projects again only if they pay an additional nonrefundable penalty registration fee of $2,000.00 in addition to the annual registration fee (if the original renewal fee was $300, the total amount for renewal including the penalty renewal fee would be $2,300.00).

Form Gen. 146 (Rev. 9/06)

PRINT FORM RESET FORM

Required Insurance and Minimum Limits

Name: Granada Hills Pool and Bathhouse Replacement Date: 9/1/2021

Agreement/Reference: W.O.E.170517F

Evidence of coverages checked below, with the specified minimum limits, must be submitted and approved prior to occupancy/start of operations. Amounts shown are Combined Single Limits ("CSLs"). For Automobile Liability, split limits may be substituted for a CSL if the total per occurrence equals or exceeds the CSL amount.

Limits

✔ **Workers' Compensation - Workers' Compensation (WC) and Employer's Liability (EL)**

WC ***Statutory***

EL **$1,000,000**

☐ Waiver of Subrogation in favor of City ☐ Longshore & Harbor Workers ☐ Jones Act

✔ **General Liability** At least $2,000,000 aggregate GL coverage. City of Los Angeles must be named as an additional insured party. **$1,000,000**

☑ Products/Completed Operations ☐ Sexual Misconduct _____

☐ Fire Legal Liability _____

☐ _____

✔ **Automobile Liability** (for any and all vehicles used for this contract, other than commuting to/from work) **$1,000,000**

___ **Professional Liability** (Errors and Omissions) _____

Discovery Period _____

✔ **Property Insurance** (to cover replacement cost of building - as determined by insurance company) _____

☐ All Risk Coverage ☐ Boiler and Machinery

☐ Flood _____ ☑ Builder's Risk

☐ Earthquake _____ ☐ _____

___ **Pollution Liability** _____

☐ _____

✔ **Surety Bonds -** Performance and Payment (Labor and Materials) Bonds 100% of the contract price

___ **Crime Insurance** _____

Other: Submitted to: Alexander Ngo @ PW BOE (213-484-4821), September 1, 2021

Contractors' Use of Criminal History for Consideration of Employment Applications Ordinance

Any contract awarded pursuant to this RFB/RFP/RFQ will be subject to the Contractors' Use of Criminal History for Consideration of Employment Applications Ordinance, Section 10.48 of the Los Angeles Administrative Code. The Ordinance provides, among other things, that contractors/subcontractors with at least 10 employees are: prohibited from seeking a job applicant's criminal history information until after a job offer is made; must post Contractors' Use of Criminal History for Consideration of Employment Applications Ordinance information in conspicuous places at worksites; and cannot withdraw a job offer based on an applicant's criminal history unless a link has effectively been made between the applicant's criminal history and the duties of the job position.

Bidders/Proposers seeking additional information regarding the requirements of the Contractors' Use of Criminal History for Consideration of Employment Applications Ordinance may visit the Bureau of Contract Administration's web site at http://bca.lacity.org.

Contractor Evaluation Program

At the end of this contract, the City will conduct an evaluation of the Contractor's performance. The City may also conduct evaluations of the Contractor's performance during the term of the contract. As required by Section 10.39.2 of the Los Angeles Administrative Code, evaluations will be based on a number of criteria, including the quality of the work product or service performed, the timeliness of performance, financial issues, and the expertise of personnel that the Contractor assigns to the contract. A Contractor who receives a “Marginal” or “Unsatisfactory” rating will be provided with a copy of the final City evaluation and allowed 14 calendar days to respond. The City will use the final City evaluation, and any response from the Contractor, to evaluate proposals and to conduct reference checks when awarding other personal services contracts.

CITY OF LOS ANGELES

Department of Public Works

Project Labor Agreement (PLA)

2020 - 2030

WITH

LOS ANGELES/ORANGE COUNTIES
BUILDING AND CONSTRUCTION TRADES COUNCIL
Affiliated with the Building & Construction Trades Department (AFL/CIO)
Craft International Unions and any other craft labor Unions signatory to this Agreement

PROJECT LABOR AGREEMENT
CITY OF LOS ANGELES DEPARTMENT OF PUBLIC WORKS

TABLE OF CONTENTS

Introduction/Findings 3

I. Definitions 6

II. Scope of Agreement 11

III. Effect of Agreement.....16

IV. Work Stoppages, Strikes, Sympathy Strikes and Lockouts 17

V. No Discrimination.....24

VI. Union Security.....25

VII. Referral.....25

VIII. Wages & Benefits 36

IX. Employee Grievance Procedure 38

X. Department Policies and Procedures.....38

XI. Compliance 39

XII. Joint Administrative Committee 40

XIII. Grievance Arbitration Procedure 41

XIV. Jurisdictional Disputes / Pre-Job Conference.....43

XV. Management Rights 45

XVI. Safety, Protection of Person and Property.....47

XVII. Savings Clause.....48

XVIII. Steward 49

XIX. Term.....50

Attachment "A" – Letter of Assent
Attachment "B" – Los Angeles/Orange Counties Building and Construction Trades Council Approved Drug and Alcohol Testing Policy
Attachment "C" – Craft Request Form
Attachment "D" – Trade Union Contact Numbers
Attachment "E" – Public Infrastructure Project Series (PIPS) List

PROJECT LABOR AGREEMENT
CITY OF LOS ANGELES

DEPARTMENT OF PUBLIC WORKS

INTRODUCTION AND FINDINGS

The purpose of this Project Labor Agreement ("Agreement") is to promote efficiency of construction operations during the construction of various projects within the Public Works' Capital Improvement Program (CIP) and provide for the orderly settlement of labor disputes and grievances without strikes or lockouts, thereby promoting the public interest in assuring timely and economical completion of these Projects.

WHEREAS, the Department of Public Works (DPW) is responsible for construction, renovation, maintenance and operation of City of Los Angeles (City) facilities and infrastructure, including capital improvement projects for major public facilities and systems throughout the City; and

WHEREAS, the safe, timely and successful completion of these projects with a trained workforce is of utmost importance to the DPW and the general public in the City; and

WHEREAS, the work to be done will require maximum cooperation from the many Parties who will be involved; and

WHEREAS, it is recognized that projects of a certain magnitude with multiple contractors and bargaining units on the job site at the same time over an extended period of time create the potential for work disruption without there being an overriding commitment to maintain continuity of work; and

WHEREAS, the interests of the general public, the City, the Unions, contractors, subcontractors, employers and workers would be best served if the construction work

proceeded in an orderly manner free of disruption because of strikes, sympathy strikes, work stoppages, picketing, lockout, slowdowns or other interferences with work; and

WHEREAS, large numbers of workers of various skills will be required in the performance of the construction work, including those to be represented by the Unions affiliated with the Los Angeles/Orange Counties Building and Construction Trades Council and any other craft labor organization which are signatory to this Agreement, employed by contractors and subcontractors who are signatory to agreements with said labor organizations; and

WHEREAS, the Contractor/Subcontractor/Employer(s) (C/S/E) and the Unions desire to mutually establish and stabilize wages, hours and working conditions for the workers employed on these Projects by the C/S/Es, and further, to encourage close cooperation among the C/S/Es, and the Unions to the end that a satisfactory, continuous and harmonious relationship will exist among the Parties to this Agreement; and

WHEREAS, this Agreement is not intended to replace, interfere with, abrogate, diminish, or modify existing local or national collective bargaining agreements in effect during the duration of this Agreement, insofar as a legally binding agreement exists between the C/S/Es and the affected Unions, except to the extent that the provisions of this Agreement are inconsistent with said collective bargaining agreements, in which event, the provisions of this Agreement shall prevail; and further, it is understood that C/S/Es are bound and shall remain bound, for the duration of this Agreement by the terms of this Agreement and applicable local and national collective bargaining agreements for the craft work performed, established between the signatory Unions and C/S/Es, in effect and covering the area of these Projects; and

WHEREAS, this Agreement is not intended to have an adverse impact on the policy of the City to maximize business opportunities for minority, women and other business enterprises in City contracts; and

WHEREAS, increasing access to employment opportunities with prevailing wages is one way for the City to directly combat poverty and stimulate economic reinvestment; and

WHEREAS, the City has adopted the City Contractor's Use of Criminal History for Consideration of Employment Applications Ordinance to help ensure a discrimination-free, diverse and equitable hiring environment; and

WHEREAS, the DPW has adopted a departmental Agreement which will provide construction employment and training opportunities in ways calculated to mitigate the harms caused by poverty, unemployment and underemployment; and

WHEREAS, this Agreement reflects the City's adoption of policy to promote diversity, inclusion and racial equity in and around all working environments of City business and operations, including, but not limited to recruitment, hiring, retention, training and contracting; and

WHEREAS, this Agreement reflects a commitment by all parties to the diversity in the workforce hiring that reflect levels of minority, women and other worker utilization at levels which are representative of the relevant workforce of these groups in the Greater Los Angeles Area as determined by the U.S. Census Bureau; and

WHEREAS, the contracts for the construction of Projects will be awarded in accordance with the applicable provisions of the DPW's Administrative Policies and Procedures; and

WHEREAS, the Parties signatory to this Agreement pledge to work towards a mutually satisfactory completion of Projects;

NOW, THEREFORE, IT IS AGREED BETWEEN AND AMONG THE PARTIES HERETO, AS FOLLOWS:

ARTICLE I

DEFINITIONS

1.1 "Agreement" is defined as this Department of Public Works Project Labor Agreement and its applicability to all Projects.

1.2 "Apprentice" is defined as any worker who is indentured in a bona fide Labor/Management construction apprenticeship program, registered and approved by the State of California Department of Industrial Relations (DIR) Division of Apprenticeship Standards (DAS) or in the case of Projects with federal funding, indentured in a bona fide Labor/Management construction apprenticeship program, approved by the US Department of Labor (DOL) and California DAS.

1.3 "Apprenticeship Program" is defined as any Labor/Management construction apprenticeship program certified and approved by the California Division of Apprenticeship Standards (DAS) or in the case of Projects with federal funding, approved by the US DOL and California DAS.

1.4 "Awarding Authority" is defined as any board or commission of the City, or any employee or officer of the City, that is authorized to award or enter into any contract on behalf of the City.

1.5 "Board" is defined as the City of Los Angeles Board of Public Works.

1.6 "Bureau of Contract Administration" (BCA) is defined as the designated bureau

within the City's DPW responsible for administering this Agreement.

1.7 "City" is defined as the City of Los Angeles, a municipal corporation, and all City awarding authorities.

1.8 "Construction contract" is defined as a City contract which has been certified by the City Controller, awarded by the Board, and is necessary to complete the DPW Project.

1.9 "Contractor/Subcontractor/Employer(s)" (C/S/E) is defined as any individual firm, partnership, owner operator, or corporation, or combination thereof, including joint ventures, which is an independent business enterprise, and which is properly licensed for the work intended, and has entered into a contract covered under this Agreement or any of its contractors or subcontractors/owner operators of any tier, with respect to the construction of any part of the Project(s) under contract terms and conditions approved by the Board and incorporated within this Agreement.

1.10 "Core Worker" is defined as a verifiable member of a C/S/E's core workforce for the purpose of this Agreement if the worker's name appears on the C/S/E's active payroll for 60 of 100 working days immediately prior to the award of the construction contract; who has worked at least two-thousand (2,000) hours in the construction craft in which they are employed, during the prior four (4) years; and meets all standards required by applicable local, state or federal law or regulation.

1.11 "Covered Project(s)" or "Project" is defined as a project or projects which have been included within the Public Infrastructure Program Series List ("PIPS") and covered by this Agreement or so designated by the Board of Public Works. The Board may identify additional projects that are appropriate for coverage by the

Agreement for inclusion under the PIPS and include such projects by Board Resolution. The Board shall request an annual review of the DPW Capital Improvement Program to identify any new projects appropriate for inclusion within the PIPS.

1.12 "Employment Hiring Plan" (EHP) is defined as a C/S/E's detailed hiring plan as described in BCA's Targeted Hiring Guidelines for Contractors and the Policy.

1.13 "Engineer" is defined as the City Engineer or his/her authorized representative.

1.14 "FHWA Project" is defined as a DPW Project that is funded in whole or in part by the Federal Highway Administration (FHWA).

1.15 "Jobs Coordinator" is defined as the Prime Contractor's designated person, agent or agency that will coordinate a covered project's local hire referral process with the C/S/E, Unions and other referral organization, such as those listed in BCA's Targeted Hiring Guidelines for Contractors. The Jobs Coordinator will be responsible for documenting the hiring process of all workers on a covered project, and must be able to demonstrate or document to the BCA that it has the requisite qualification and/or experience to fulfill the duties and responsibilities as outlined in the Policy.

1.16 "Joint Administrative Committee" (JAC) is defined as described in Article XII of this Agreement.

1/.17 "LA/OCBTC" (Trades Council) is defined as the Los Angeles/Orange Counties Building and Construction Trades Council.

1.18 "Letter of Assent" is defined as the document that each C/S/E (of any tier) must sign and submit to the City's Inspector of Public Works, which formally binds them

to adherence to all the forms, requirements and conditions of this Agreement and Policy.

1.19 "Local Resident" is defined as either an individual whose primary residence is within Tier 1 or 2 zip code areas, or an individual whose primary place of residence is within the City of Los Angeles and has been identified as a Transitional Worker.

1.20 "Long-Term Unemployment" is defined as being jobless for 27 weeks or more, or as otherwise defined by the Bureau of Labor Statistics.

1.21 "Master Labor Agreement" is defined as the local area collective bargaining agreements negotiated and executed from time to time by (i) the applicable employer associations and (ii) Local Unions having jurisdiction over Covered Projects.

1.22 "Plan" is defined as the Plan for the Settlement of Jurisdictional Disputes in the Construction Industry as referenced in Article XIV of this Agreement.

1.23 "Policy" is defined as the DPW Public Works Infrastructure Stabilization Policy.

1.24 "Public Infrastructure Program Series List" (PIPS) is defined as all projects contained in the adopted PIPS (Attachment "E") that are covered under this Agreement.

1.25 "Subscription Agreement" is defined as the contract between a C/S/E and a Union's Labor/Management Trust Fund(s) that allows the C/S/E to make the appropriate fringe benefit contributions in accordance with the contract terms.

1.26 "Targeted Hiring Guidelines for Contractors" is defined as the document provided by the BCA to assist C/S/E's in implementing the targeted hiring procedures.

1.27 "Tier 1" is defined as zip codes within the City, identified in Article 7.4 of this

Agreement, having at least 2 census tracts (or portion thereof) in which the median household income is less than 50% of the County of Los Angeles' median annual household income, and/or where the unemployment rate exceeds 200% of the County of Los Angeles' unemployment rate as reported by the most recent available U.S Census Bureau data.

1.28 "Tier 2" is defined as zip codes within the City, identified in Article 7.5 of this Agreement, having at least 2 census tracts (or portion thereof) in which the median household income is less than the County of Los Angeles' median annual household income, and/or where the unemployment rate exceeds 100% of the County of Los Angeles' unemployment rate as reported by the most recent Census Bureau data.

1.29 "Transitional Worker" is defined as an individual whose primary place of residence is within the City of Los Angeles and who prior to commencing work on a Project has been certified as satisfying at least one of the following Criteria: (1) having Veteran status; having a documented history of involvement with the criminal justice system; or being homeless. If the Jobs Coordinator or Employer is not able to identify anyone using Criteria (1), then Criteria (2) may be used. Criteria (2) is an individual that is either a graduate of an LA/OCBTC approved MC3 pre-apprenticeship program or facing two of the following barriers to employment: having a household income less than 50% of the Los Angeles County's median annual household income, receiving public assistance, lacking a GED or high school diploma, being a custodial single parent, suffering from long-term unemployment, being emancipated from the foster care system, or being an

apprentice with less than 15% of the apprenticeship hours required to graduate to journey level in a program as described in Section 1.3 above.

1.30 "Union(s)" or "Signatory Unions" is defined as the Los Angeles/Orange Counties Building and Construction Trades Council affiliated with the Building & Construction Trades Department (AFL/CIO) Craft International Unions or any other craft labor organization signatory to this Agreement, acting in their own behalf and on behalf of their respective affiliates and member organizations whose names are subscribed hereto and who have through their officers executed this Agreement.

ARTICLE II

SCOPE OF AGREEMENT

2.1 Parties: The Agreement shall apply and is limited to all C/S/Es performing construction on a DPW Project, the Board, and the Unions.

2.2 Project Description: The Agreement shall apply to all PIPS construction contracts awarded by either the Board or the Awarding Authority. The Board has the absolute right to combine, consolidate or cancel contracts or portions of contracts identified as part of the Project. Should the Board remove any contract from the Project and thereafter authorize that construction work be commenced on the contract, the contract may, at the discretion of the Board, be performed under the terms of the Agreement. After the fourth (4th) year of this Agreement, the parties shall meet and discuss additional and newer projects to be listed on a revised Attachment E, which projects shall be covered under this Agreement. Additionally, it is understood by the Parties that the Board may at any time, and at its sole

discretion, add additional projects under this Agreement not otherwise described in this Section 2.2.

2.3 Project Labor Disputes: The provisions of this Agreement, including the Master Labor Agreements ("MLA"), (which are the local collective bargaining agreements of the signatory Unions having jurisdiction over the work on the Project, as such may be changed from time-to-time and which are incorporated herein by reference) shall apply to the work covered by this Agreement. It is understood that this is a self-contained, stand alone Agreement and that by virtue of having become bound to this Project Labor Agreement, neither the Prime Contractor, Employer, nor the Subcontractor (of any tier) or owner-operator will be obligated to sign any other local, area, or national agreement, except as may be provided in Section 8.2, below. It is further agreed that, where there is conflict, the terms and conditions of this Agreement shall supersede and override terms and conditions of any MLA and all other national, area, or local collective bargaining agreements except for all work performed under the NTL Articles of Agreement, the National Stack/Chimney Agreement, the National Cooling Tower Agreement, all instrument calibration work and loop checking shall be performed under the terms of the UA/IBEW Joint National Agreement for Instrument and control systems Technicians, and the National Agreement of the International Union of Elevator Constructors, with the exception of Article IV (Work Stoppages, Strikes, Sympathy Strikes and Lockouts), Article XIII (Grievance and Arbitration Procedure) and Article XIV (Jurisdictional Disputes) of this Agreement, which shall apply to such work. All disputes relating to the interpretation or application of this Agreement

shall be subject to resolution by the grievance arbitration procedure set forth in Article XIII of this Agreement, except for those disputes exempted from the grievance procedure pursuant to Section 13.1. Where a subject is covered by a provision in an MLA and not covered by this Agreement, the provision of the MLA shall prevail. Any dispute as to the applicable source between this Agreement and any MLA for determining the wages, hours or working conditions of employees on a Project shall be resolved under the grievance procedures established in this Agreement.

2.4 Exclusions:

(1) The Agreement shall be limited to construction work on a Project which is approved by the Board, and is not intended to, and shall not apply to any construction work performed at any time prior to the effective date, or after the expiration or termination of the Agreement, or on other City projects.

(2) The Agreement is not intended to, and shall not, affect or govern the award of contracts by the Board, which are outside the approved scope of the Project.

(3) The Agreement is not intended to, and shall not, affect the operation or maintenance of any facilities whether related or not to Projects.

(4) The Agreement shall not apply to a C/S/E's executives, managerial employees, engineering employees, supervisors (except those covered by the MLAs), office and clerical employees, or any other employee not performing construction craftwork.

(5) Notwithstanding the foregoing, it is understood and agreed that

Building/Construction Inspector and Field Soils and Material Testers (inspectors) are a covered craft under this Agreement. This inclusion applies to the scope of work defined in the State of California Wage Determination for that Craft. This shall not cover quality assurance work performed by or on behalf of the DPW. Every Inspector performing under the wage classification of Building/Construction Inspector and Field Soils and Material Tester under a professional services agreement or a construction contract shall be bound to all applicable requirements of this Agreement. Notwithstanding the provisions of this sub-section, the DPW may engage consultants for limited periods of time in the event of an urgent need for specialized inspection services. The DPW must provide prior notice to the Trades Council that despite good faith efforts, it is unable to obtain qualified inspector(s) under the provisions of this Agreement. Such engagement shall be only to meet immediate and limited needs until such qualified inspectors working under this Agreement are available.

(6) This Agreement shall not apply to material suppliers or delivery by any means of material, supplies, or equipment required to any point of delivery, except that the hauling/delivery of soil, sand, gravel, aggregate, rocks, concrete, asphalt, excavation materials, fill material and construction debris shall be covered by this Agreement.

(7) This Agreement shall not apply to City employees.

(8) This Agreement shall not apply to the work of persons, firms and other entities that perform consulting, planning, scheduling, management or other

supervisory services on the Project, provided such entities do not perform craft employee construction work on the Project with their own employees or to customer service work performed post completion by an entity other than the C/S/E that performed the original construction work.

(9) This Agreement shall not apply to DPW construction contracts or Projects, if such Project has federal funding and the federal funding source has established provisions or rules that forbid the inclusion of a Project Labor Agreement.

(10) For FHWA Projects, this Agreement shall apply to the covered project, in accord with the policies and conditions under which the FHWA funds are received from the U.S. Department of Transportation.

(11) Out-of-State Workers: Hours worked by residents of states other than California shall not be included in calculation of total hours of Project work for purposes of the percentage requirements set forth by the Agreement.

(12) Notwithstanding the foregoing, demolition and asbestos abatement shall constitute work covered by the Project Labor Agreement when such work is part of a Covered Project.

2.5 The DPW and/or the C/S/Es, as appropriate, have the absolute right to award contracts or subcontracts on this Project to any C/S/E notwithstanding the existence or non-existence of any agreements between such C/S/E and any Union parties, provided only that such C/S/E is ready, willing and able to execute and comply with this Agreement should such C/S/E be awarded work covered by this Agreement.

ARTICLE III

EFFECT OF AGREEMENT

3.1 By executing the Agreement, the Unions and the Board agree to be bound by each and all of the provisions of the Agreement.

3.2 By accepting the award of a construction contract for a Project, each C/S/E agrees to be bound by each and every provision of the Agreement.

3.3 At the time that any C/S/E enters into a subcontract with any subcontractor of any tier providing for the performance of construction for a Covered Project, the C/S/E shall provide a copy of this Agreement to said subcontractor and shall require the subcontractor as a part of accepting the award of a construction subcontract to agree in writing in the form of a Letter of Assent to be bound by each and every provision of this Agreement prior to the commencement of work. See Attachment "A" for a sample Letter of Assent. Approval of any C/S/E to perform work on the Project will be contingent upon the submittal of its Letter of Assent and its Employment Hiring Plan.

3.4 This Agreement shall only be binding on the signatory C/S/Es hereto and shall not apply to the parents, affiliates, subsidiaries, or other ventures of any construction contract prior to the execution of this Agreement.

ARTICLE IV

WORK STOPPAGES, STRIKES, SYMPATHY STRIKES AND LOCKOUTS

4.1 The Unions, Board and C/S/Es agree:

(1) During the existence of this Agreement, there shall be no strike, sympathy strike, picketing, hand billing, slowdown, withholding of work, refusal to work, lockout, sick-out, walk-off, sit-down, stand-in, wobble, boycott, or other work stoppage, disruption, advising the public that a labor dispute exists, or other impairment of any kind for any reason by the Unions or employees employed on the Project, at the job site of the Project, or at any other facility of the City because of a dispute on this Project.

(2) As to employees employed on the Project, there shall be no lockout of any kind by any C/S/E(s) covered by the Agreement. The C/S/E(s) may lay off employees for lack of work or delay of work on the Project.

(3) The Unions agree that they shall not sanction in any way any picket line or other impairment of the work on the Project and will affirmatively take all measures necessary to effectively induce their respective members to cross any and all picket lines and report for work as scheduled and that responsible representatives of the Unions who are employed on the Covered Project will also do so themselves.

(4) The Unions agree that they shall not sanction, aid, abet, encourage or continue any work stoppage, strike, picketing or other disruptive activity at the Project site or C/S/E's business site that will economically and/or materially affect the completion of the Project. Any such costs that

economically and/or materially harm the City shall be borne by the affected Union and made payable to the City.

(5) Notwithstanding any provision of this Agreement to the contrary, it shall not be a violation of this Agreement for any Union to withhold the services of its members (but not the right to picket) from a particular C/S/E who:

(i) fails to timely pay its weekly payroll; or

(ii) fails to make timely payments to the Union's Labor/Management Trust Funds in accordance with the provisions of the applicable MLA. Prior to withholding its members services for the C/S/E's failure to make timely payments to the Union's Labor/Management Trust Funds, the Union shall give at least ten (10) days (unless a lesser period of time is provided in the Union's MLA, but in no event less than forty-eight (48) hours) written notice of such failure to pay by registered or certified mail, return receipt requested, and by either email or facsimile transmission to the involved contractor, the prime contractor, and the BCA. Union will meet within the ten (10) day period to attempt to resolve the dispute.

(iii) Upon the payment of the delinquent C/S/E of all monies due and then owing for wages and/or fringe benefit contributions, the Union shall direct its members to return to work; the C/S/E shall return all such members back to work.

4.2 Expiration of Local Agreements: If the MLA, or any local, regional, and other applicable collective bargaining agreements expire during the term of the Covered

Project, the Union(s) agree that there shall be no work disruption of any kind as described in Section 4.1 above as a result of the expiration of any such agreement(s) having application on this Covered Project and/or failure of the involved Parties to that agreement to reach a new contract. For C/S/Es which are not independently signatory to an MLA, terms and conditions of employment established and set for purposes of prevailing wage requirements under this Agreement at the time of bid shall remain established and set. Otherwise to the extent that such agreement does expire and the Parties to that agreement have failed to reach concurrence on a new contract, work will continue on the Covered Project on one of the following two (2) options, both of which will be offered by the Unions involved to the C/S/Es affected:

(1) Each of the Unions with a contract expiring must offer to continue working on the Covered Project under interim agreements that retain all the terms of the expiring contract, except that the Unions involved in such expiring contract may each propose wage rates and employer contribution rates to employee benefit funds under the prior contract different from what those wage rates and employer contributions rates were under the expiring contracts. The terms of the Union's interim agreement offered to C/S/Es will be no less favorable than the terms offered by the Union to any other employer or group of employers covering the same type of construction work in Los Angeles County.

(2) Each of the Unions with a contract expiring must offer to continue working on the Project under all the terms of the expiring contract, including the

wage rates and employer contribution rates to the employee benefit funds, if the C/S/E affected by that expiring contract agrees to the following retroactive provisions: if a new MLA, local, regional or other applicable labor agreement for the industry having application at the Covered Project is ratified and signed during the term of this Agreement and if such new labor agreement provides for retroactive wage increases, then each affected C/S/E shall pay to its employees who performed work covered by this Agreement at the Project during the hiatus between the effective dates of such expired and new labor agreements, an amount equal to any such retroactive wage increase established by such new labor agreement, retroactive to whatever date is provided by the new labor agreement for such increase to go into effect, for each employee's hours worked on the Project during the retroactive period. All Parties agree that such affected C/S/Es shall be solely responsible for any retroactive payment to its employees and that neither the Project, nor the Board, nor the Board's designee, nor any other C/S/E has any obligation, responsibility or liability whatsoever for any such retroactive payments or collection of any such retroactive payments, from any such C/S/E.

(3) Some C/S/Es may elect to continue to work on the Project under the terms of the interim agreement option offered under paragraph (1) above and other C/S/Es may elect to continue to work on the Project under the retroactivity option offered under paragraph (2) above. To decide between the two options, C/S/Es will be given one week after the particular labor

agreement has expired or one week after the Union has personally delivered to the C/S/Es in writing its specific offer of terms of the interim agreement pursuant to paragraph (1) above, whichever date is later. If the C/S/E fails to timely select one of the above options, the C/S/E will be deemed to have selected paragraph (2), above.

4.3 Expedited Arbitration will be utilized for all work stoppages and lockouts. In lieu of or in addition to any other action at law or equity, any party may institute the following procedure when a breach or violation of Section 4.1 is alleged to have occurred:

(1) The party invoking this procedure shall notify the permanent arbitrator next in sequence from the following list:

1. Christopher David Ruiz Cameron
2. Michael Rappaport
3. Walter Daugherty
4. Paul Greenberg
5. Lou Zigman

The DPW and the Unions agree these shall be the five permanent Arbitrators under this procedure. In the event that none of the five permanent Arbitrators are available for a hearing within 24 hours, the party invoking the procedure shall have the option of delaying until one of the five permanent Arbitrators is available or of asking the permanent Arbitrator that would normally hear the matter to designate an arbitrator to sit as a substitute Arbitrator for this dispute. If any of the permanent Arbitrators ask

to be relieved from their status as a permanent Arbitrator, the DPW and the Unions shall mutually select a new permanent Arbitrator from the following list of arbitrators:

1. John Kagel
2. Fred Horowitz
3. Wayne Estes

The selection of a new permanent Arbitrator shall be made by each party alternately striking from the foregoing list until one name remains who shall be the replacement permanent Arbitrator. Expenses incurred in arbitration shall be borne equally by the Union and the Contractor involved and the decision of the Arbitrator shall be final and binding on both Parties, provided, however, that the Arbitrator shall not have the authority to alter or amend or add to or delete from the provisions of this Agreement in any way. Notice to the Arbitrator shall be by the most expeditious means available, including by telephone and by facsimile or email to the party alleged to be in violation and to the Trades Council and involved local Union if a Union is alleged to be in violation.

(2) Upon receipt of said notice, the Arbitrator shall convene a hearing within twenty-four (24) hours if it is contended that the violation still exists.

(3) The Arbitrator shall notify the Parties to the Arbitration by telephone and by facsimile or email of the place and time for the hearing. Notice shall be given to the individual Unions alleged to be involved. Said hearing shall be completed in one session, which, with appropriate recesses at the

Arbitrator's discretion, shall not exceed twenty-four (24) hours unless otherwise agreed upon by all Parties. A failure of any party to attend said hearings shall not delay the hearing of evidence or the issuance of any decision by the Arbitrator.

(4) The sole issue at the hearing shall be whether or not a violation of Sections 4.1 or 4.2 of this Article IV has in fact occurred. The Arbitrator shall have no authority to consider any matter of justification, explanation or mitigation of such violation or to award damages, which issue is reserved for court proceedings, if any. The decision shall be issued in writing within three (3) hours after the close of the hearing, and may be issued without a written opinion. If any party desires a written opinion, one shall be issued within fifteen (15) days, but its issuance shall not delay compliance with or enforcement of the decision. The Arbitrator may order cessation of the violation of this Article and other appropriate relief and such decision shall be served on all Parties by hand or registered mail upon issuance.

(5) Such decision may be enforced by any Court of competent jurisdiction upon the filing of this Agreement and all other relevant documents referred to above in the following manner. Written notice of the filing of such enforcement proceedings shall be given to the other party. In the proceeding to obtain a temporary order enforcing the Arbitrator's decision as issued under Section 4.3(3) of this Article, all Parties waive the right to a hearing and agree that such proceedings may be ex parte. Such agreement does not waive any party's right to participate in a hearing for a final order

of enforcement. The Court's order or orders enforcing the Arbitrator's decision shall be served on all Parties by hand or delivered by registered mail.

(6) Any rights created by statute or law governing arbitration proceedings inconsistent with the above procedure or which interfere with compliance therewith are hereby waived by the Parties to whom they accrue.

(7) The fees and expenses incurred in arbitration shall be divided equally by the parties (the applicable Union and Contractor) to the arbitration.

4.4 The procedures contained in Section 4.3 shall be applicable to alleged violations of Article IV to the extent any conduct described in Sections 4.1 or 4.2 occurs on the Project. Disputes alleging violation of any other provision of this Agreement's other provisions, including any underlying disputes alleged to be in justification, explanation, or mitigation of any violation of Sections 4.1 or 4.2 shall be resolved under the applicable grievance adjudication procedures for these other Articles.

ARTICLE V

NO DISCRIMINATION

5.1 The C/S/Es and Unions agree not to engage in any form of discrimination, including in the hiring and dispatching of workers, on the grounds of, or because of, race, religion, national origin, ancestry, sex, sexual orientation, age, physical handicap, domestic partner status, medical condition, political affiliation, membership in a labor organization, being a party to a collective bargaining agreement, color or disability.

ARTICLE VI

UNION SECURITY

6.1 The C/S/Es recognize the Unions as the respective sole bargaining representatives for all craft employees working within the scope of this Agreement.

6.2 Employees are not required to become or remain union members or pay dues or fees as a condition of performing Covered Work under this Agreement. Employers shall make and transmit all deductions for union dues, fees, and assessments that have been voluntarily authorized by employees in writing in accordance with the applicable Master Labor Agreement. Nothing in this Section 6.2 is intended to supersede independent requirements of applicable Master Labor Agreements as to those Employers otherwise signatory to such Master Labor Agreements and as to the employees of those Employers who are performing Covered Work.

ARTICLE VII

REFERRAL

7.1 The Union(s) shall be the primary source of all craft labor employed on the Project(s) and will exert their best efforts to recruit and identify individuals, particularly residents of the City residing in the Tier 1 or Tier 2 zip code areas, as well as those referred by the Jobs Coordinator, for entrance into joining labor/management apprenticeship programs, and to assist individuals in qualifying and becoming eligible for such programs. In the event that the C/S/E has it's own Core Worker(s), and wishes to employ such workers to perform covered work, the C/S/E shall employ such workers in accord with the provisions of this Article VII.

The following process shall govern the employment of workers at the Project:

(1) A worker shall be considered a member of a C/S/E's core workforce for the purposes of this Article if the worker meets the required definition stated in Section 1.10 of this Agreement. The C/S/E shall identify Core Workers in their Employment Hiring Plan and shall provide payroll records evidencing the worker's qualification as a Core Worker upon request by the City. Prior to each C/S/E, which utilizes any core employees, performing any work on Covered Project(s), each such C/S/E shall provide a list of its core employees to the BCA and the Trades Council. Failure to do so will prohibit the C/S/E from using any core employees. The number of Core Workers on this Project shall be governed by the following procedure: one Core Worker shall be selected and one worker from the hiring hall of the affected trade or craft and this process shall repeat until such C/S/E's requirements are met or until such C/S/E has hired five (5) such Core Workers for that craft, whichever occurs first. Thereafter, all additional employees in the affected trade or craft shall first be requisitioned from the hiring hall in accordance with other provisions in Article VII.

(2) In the event of a reduction-in-force or layoff, such will take place in a manner to assure that the number of Core Workers in the affected craft does not exceed, at any time, the number of others working in that craft who were employed pursuant to other procedures available to the C/S/E under this Agreement. This provision applies only to C/S/Es which are not independently signatory to a current MLA for the craft workers under their

employ and is not intended to limit the transfer provisions of the MLAs of any Union.

7.2 C/S/Es shall be bound by and utilize the registration facilities and referral systems established or authorized by the signatory Unions for all job site craft employee(s) before such employee(s) begin work, when such procedures are not in violation of Federal or State law or in conflict with provisions set forth in this Agreement.

7.3 In the event that the referral facilities maintained by the Unions are unable to fill the requisition of a C/S/E for Local Residents and/or Transitional Workers within a forty-eight (48) hour period after such requisition is made by the C/S/E (Saturdays, Sundays and holidays excepted), the C/S/E shall be free to obtain Local Residents and/or Transitional Workers from any source. However, for all other requisitions by a C/S/E for non-Local Residents or non-Transitional Workers, only after a forty-eight (48) hour period (Saturdays, Sundays and holidays excepted) after such requisition is made by the C/S/E, shall the C/S/E be free to obtain work persons from any source if the Unions are unable to fill the requisition. However, the C/S/E is still responsible for complying with conditions and requirements of the Targeted Hiring Guidelines for Contractors and the Policy.

(1) The C/S/E's must document, from the applicable Tiers, all efforts made to comply with the targeted hiring process to locate and hire Local Residents and/or Transitional Workers. The C/S/E may employ Local Residents and/or Transitional Workers referred by the Jobs Coordinator. However, in the event the Jobs Coordinator is unable to fill the requisition of a C/S/E for Local Residents and/or Transitional Workers, the C/S/E may utilize any

organization, such as those listed in the Targeted Hiring Guidelines for Contractors, to assist them in satisfying the requirements of the Targeted Hiring Guidelines for Contractors and the Policy.

(2) The C/S/E shall inform the Unions, Job Coordinator and the BCA of the name, address, worker craft classification and social security number of any worker hired from other sources upon their employment on the Project(s).

(3) No Local Resident and/or Transitional Worker, having been pre-screened and/or pre-qualified by the Jobs Coordinator, and employed by the C/S/E to work on the Project, shall be required to participate in any Joint Labor/Management "boot camp" or pre-apprentice program that will unnecessarily delay the Local Resident and/or Transitional Worker's start of work or cause said worker's termination due to having to participate in such "boot camps" or pre-apprentice programs.

(4) Any work person hired under this Section 7.3, as well as all other workers hired under this Article VII, shall be obligated to register with the appropriate Union hiring hall, prior to their first day of employment on the Project.

7.4 The Unions will exert their best efforts to refer/recruit sufficient numbers of skilled craft Local Residents and Transitional Workers to fulfill the requirements of the C/S/E(s). In recognition of the fact that the communities within the boundaries of the City will be impacted by the construction of the Project(s), the Parties agree to support the development and graduation of Transitional construction apprentices and workers from residents within Tier 1 or Tier 2 zip code areas. Towards that end, the Unions agree to encourage and provide referrals and utilization of

qualified workers residing preferably within the Tier 1 zip code areas identified in the following:

Tier 1 Zip Codes

90001	90013	90028	90044	90068	91402
90002	90014	90029	90046	90077	
90003	90015	90031	90047	90089	
90005	90016	90032	90049	90248	
90006	90017	90033	90056	90731	
90007	90018	90037	90057	90744	
90008	90020	90038	90058	90810	
90010	90021	90039	90059	90813	
90011	90023	90042	90063	91205	
90012	90024	90043	90065	91331	

7.5 Wherein the Unions cannot provide the C/S/Es, having documented their efforts in the attainment of Local Residents and/or Transitional Workers within the Tier 1 zip code areas as listed in Section 7.4 above, the Unions will exert their best efforts to recruit and identify Local Residents and/or Transitional Workers within Tier 2 zip code areas identified in the following and Transitional Workers in the remaining zip code areas of the City:

Tier 2 Zip Codes

90004	90048	90265	90710	91304	91342	91405	91605
90019	90061	90272	90717	91306	91343	91406	91606
90025	90062	90290	90732	91307	91344	91411	91607
90026	90064	90291	90745	91311	91345	91423	
90027	90066	90292	91040	91316	91352	91504	
90034	90067	90305	91042	91324	91356	91505	
90035	90095	90402	91201	91325	91364	91506	
90036	90230	90405	91206	91330	91367	91601	
90041	90232	90501	91302	91335	91401	91602	
90045	90247	90502	91303	91340	91403	91604	

The Unions will exert their best efforts to recruit and identify Local Residents and/or Transitional Workers of the City and assist individuals in qualifying and becoming eligible for such apprenticeship programs.

7.6 The Prime Contractor is responsible for ensuring compliance with the targeted hiring process for the Project(s) to achieve the following anticipated levels of participation:

(1) The following percentages shall be the targeted hiring for the Project:

(a) At least 30% of total work hours shall be performed by Local Residents residing within Tier 1 described in Article 7.4. If the 30% local hire is not attained utilizing the Tier 1, the outreach shall expand to the Tier 2 as described in Article 7.5 of this Agreement.

(b) At least 10% of total work hours shall be performed by Transitional Workers residing within Tier 1 or Tier 2 zip code areas described in Articles 7.4 and 7.5 respectively and the remaining zip code areas within the City of Los Angeles. These hours shall be applied towards the 30% Local Resident targeted hiring.

(c) Apprentices must be employed on each project in accordance with the requirements mandated by Section 1777.5 of the California Labor Code. The Parties agree that City residents in the Tier 1 or Tier 2 zip code areas, as well as Transitional Workers, will perform 50% of all apprenticeship hours worked on the Project.

An apprentice who begins his/her period of apprenticeship as a City resident in the Tier 1 or Tier 2 zip code areas, or an apprentice

Transitional Worker, will retain that status for the entire apprenticeship, regardless of any changes in the apprentice's residence provided the Unions submit to BCA the necessary identifying information to enable the tracking of such apprentices, if requested by BCA.

(d) The C/S/Es shall coordinate with their designated Jobs Coordinator to document their compliance efforts through the utilization of the Craft Request Form, hiring hall procedures, the resources of organizations listed in BCA's Targeted Hiring Guidelines for Contractors, or any other organization/agency that can assist the C/S/E in meeting this requirement. The provisions to address the non-attainment of the targeted hiring participation and/or apprenticeship hiring participation levels on a Project are addressed in the Policy.

(2) The employer retains authority in making individual hiring decisions.

(3) Hours worked by residents of states other than California shall not be included in calculation of total hours of Project work for purposes of the percentage requirements set forth above.

(4) The above referenced targeted hiring shall apply to FHWA projects in accord with the policies and conditions under which the FHWA funds are received from the U.S. Department of Transportation.

7.7 The Transitional Workers may be referred to the Unions from the Jobs Coordinator or Employer. The Jobs Coordinator or Employer shall pre-screen and/or pre-

qualify any applicant prior to referral to the Unions. Drug screening will be a prerequisite to employment. The following criteria will be used to identify the Transitional Worker, with first priority given to Group 1:

(1) Satisfies one of the following criteria:

a. Being a veteran;

b. Having a documented history of involvement with the justice system;

c. Being homeless; or

(2) Is an LA/OCBTC approved MC3 pre-apprenticeship program graduate

OR

Faces at least two of the following barriers to employment:

a. Having a household income below 50% of the Los Angeles County's median annual household income;

b. Emancipated from the foster care system;

c. Receiving public assistance;

d. Lacking a GED or high school diploma;

e. Being an apprentice with less than 15% of the apprentice hours required to graduate to journey level in a program as described in Section 1.3;

f. Being a custodial single parent;

g. Suffering from long-term unemployment, as described in Section 1.20;

To qualify under this section, the Jobs Coordinator shall verify and certify that the individual's primary place of residence is within the City and that such individual

satisfies the criteria set forth above.

7.8 The C/S/Es and the Unions recognize a desire to facilitate the entry into the building and construction trades of veterans who are interested in careers in the building and construction industry. The C/S/Es and Unions agree to utilize the services of the Center for Military Recruitment, Assessment and Veterans Employment (hereinafter "Center") and the Center's "Helmets to Hardhats" program to serve as a resource for preliminary orientation, assessment of construction aptitude, referral to apprenticeship programs or hiring halls, counseling and mentoring, support network, employment opportunities and other needs as identified by the Parties.

7.9 The Unions and C/S/Es agree to coordinate with the Center to create and maintain an integrated database of veterans interested in working on a Project and of apprenticeship and employment opportunities for a Project. To the extent permitted by law, the Unions will give credit to such veterans for bona fide, provable past experience.

7.10 The C/S/Es shall use the Craft Request Form (See Attachment C) and the procedures written therein to request any and all workers from Unions with a concurrent transmittal of such request to the Jobs Coordinator, including workers qualified as Local Residents, Transitional Workers, and/or general dispatch.

(1) When Local Residents and/or Transitional Workers are requested by the C/S/Es, the Unions will refer such workers regardless of their place in the Unions' hiring halls' list and normal referral procedures.

(2) In the event that a C/S/E, having not achieved its targeted hiring participation levels, requests a Local Resident and/or Transitional Worker from the Union hiring facility, and is referred a worker who is not a Local Resident and/or Transitional Worker, the C/S/E is under no obligation to hire the referred worker for the Project work and shall notify the Union hiring facility and the Jobs Coordinator.

(3) The C/S/Es, Unions and Jobs Coordinator agree to maintain copies of all Craft Request Forms used on the Project submitted or received including transmission verification reports that are date/time imprinted. All Craft Request Forms and transmission verification reports shall be available for inspection and copies provided, upon request by the City representative as described in Article XI of this Agreement.

7.11 Apprentices

(1) The Parties recognize the need to maintain continuing support of the programs designed to develop adequate numbers of competent workers in the construction industry, the obligation to capitalize on the availability of the City's local work force, and the opportunities to provide continuing work for Projects covered by this Agreement. To these ends, the Parties shall facilitate, encourage, and assist Local Residents and/or Transitional Workers to commence and progress in Labor/Management apprenticeship and/or training programs in the construction industry leading to participation in such apprenticeship programs. The City, Jobs Coordinator, Work Source Centers, other non-profit entities, organizations and the Unions, will work

cooperatively to identify, or establish and maintain effective programs and procedures for persons interested in entering the construction industry and which will help prepare them for the formal joint Labor/Management apprenticeship programs maintained by the signatory unions.

(2) Unions shall track retention of Apprentices hired through this program for so long as those Apprentices participate in a joint labor/management apprenticeship program. The DPW shall provide a list of all Apprentices who have worked on City of Los Angeles PLA projects to the apprenticeship coordinators of the signatory unions on a quarterly basis. In turn, the signatory unions shall collect and compile information on the retention of these Apprentices and submit this information to the DPW on a quarterly basis. The DPW will use the information provided to generate a quarterly report on retention of Apprentices on the City's PLA projects.

(3) All apprentices shall work under the direct supervision of a journeyman from the trade in which the apprentice is indentured. A journeyman shall be defined as set forth in the California Code of Regulations, Title 8 [apprenticeship] section 205, which defines a journeyman as a person who has either completed an accredited apprenticeship in his or her craft, or has completed the equivalent of an apprenticeship in length and content of work experience and all other requirements in the craft which has workers classified as journeyman in the apprenticeable occupation. Should a question arise as to a journeyman's qualification under this subsection, the

C/S/E shall provide adequate proof evidencing the worker's qualification as a journeyman.

ARTICLE VIII

WAGES AND BENEFITS

8.1 Wages.

All employees covered by this Agreement shall be classified in accordance with work performed and paid the hourly wage rates for those classifications in compliance with the applicable prevailing wage rate determination established pursuant to the California Labor Code by the Department of Industrial Relations or as established by the US DOL if applicable. If a prevailing rate increases during the term of this Agreement under State law or Federal law, the Contractor shall pay the rate as of its effective date under the applicable law. The C/S/Es directly signatory to one or more of the MLAs are required to pay all wages set forth in those MLAs without reference to the forgoing. If the prevailing wage laws are repealed during the term of this Agreement, the contractor shall pay the wage rates established under the MLAs, except as otherwise provided in this Agreement.

8.2 Benefits.

(1) All C/S/Es not signatory to the established Labor/Management Trust Fund agreements, as specified in the MLAs for the craft workers in their employ, shall sign a "Subscription Agreement" with the appropriate Labor/Management Trust Fund covering the work performed under this agreement.

(2) All C/S/Es shall pay contributions to the established employee benefit funds on behalf of all employees performing Project work under this Agreement in the amounts designated in the appropriate MLA and make all employee-authorized deductions in the amounts designated in the appropriate MLA; provided, however, that such contributions shall not exceed the contribution amounts set forth in the applicable prevailing wage determination. The C/S/Es directly Signatory to one or more of the MLAs are required to make all contributions set forth in those MLAs without reference to the forgoing. Bona fide jointly-trusteed benefit plans or authorized employee deductions programs established or negotiated under the applicable MLA or by the Parties to this Agreement during the life of this Agreement may be added, provided that the contributions do not exceed the amounts set forth in the applicable prevailing wage determination.

(3) The C/S/E adopts and agrees to be bound by the written terms of the applicable, legally established, trust agreement(s) specifying the detailed basis on which payments are to be made into, and benefits paid out of, such trust funds for its employees. The C/S/E authorizes the Parties to such trust funds to appoint trustees and successors' trustees to administer the trust funds and hereby ratifies and accepts the trustees so appointed as if made by the C/S/E.

ARTICLE IX

EMPLOYEE GRIEVANCE PROCEDURE

9.1 Should a grievance arise regarding the imposition of discipline of an employee, or the dismissal of an employee, working on Project work, all such grievance(s) shall be processed, exclusively, under the grievance procedure contained in the applicable MLA for the craft Union representing such employee(s) and not under the provisions of the Grievance Arbitration provisions of Article XIII.

9.2 The C/S/Es shall not discipline or dismiss its employees except for good cause.

ARTICLE X

DEPARTMENT POLICIES AND PROCEDURES

10.1 All construction contracts identified by the DPW as part of the Projects shall include the following provisions. Such provisions include, but are not limited to:

(1) All persons who perform labor in the execution of a construction contract shall be paid the prevailing rate of wages applicable to the classification as provided in Article III, Section 377 of the Los Angeles City Charter.

(2) All C/S/Es shall provide information concerning their experience, financial qualifications, including proof of a current State Contractor's License, Business Tax Registration Certificate, and ability to perform said contract or subcontract.

10.2 In addition to the above requirements, the C/S/Es and Unions understand and agree that all construction contracts shall be awarded in accordance with other applicable provisions of the Los Angeles City Charter ("Charter") (effective July 1,

2000), and the Los Angeles Administrative Code ("Administrative Code") (and any future amendments applicable thereto), including, but not limited to:

(1) Los Angeles City Charter Article III, Section 371 (award of construction contracts to the lowest responsible bidder);

(2) Administrative Code Sections, 10.8-1 0.13 (prohibition of discrimination); and Mayor's Executive Directive No. 2001-26 (City of Los Angeles Minority, Women, and Other Business Enterprise Program).

ARTICLE XI

COMPLIANCE

11.1 It shall be the responsibility of the C/S/Es and Unions to investigate and monitor compliance with the provisions of the Agreement contained in Article VIII (Wages and Benefits). The Board shall appoint the BCA or its designee to investigate and monitor compliance with Article VIII, the applicable provisions of the Charter and the Administrative Code, including, but not limited to, the prevailing wage requirements of the Charter, Local Residents, and Transitional Worker hiring compliance and the Policy, and the affirmative action provisions of the Administrative Code, and to recommend to the Board or designee enforcement measures to ensure the C/S/E's compliance with the general conditions of a construction contract and the Policy. At the conclusion of any six-month period, the Parties to the Agreement shall report to the Board with a status update on the Agreement with regard to that Project, including a description of any obstacles or barriers faced. The provisions of this Article shall not substitute for or preclude any

employee or Union from filing a grievance for any violation of Article VIII under the provisions of the Grievance Arbitration Procedure provisions of Article XIII.

11.2 Each C/S/E shall cooperate fully and promptly with any inquiry or investigation the City or its designated representatives deems necessary in order to monitor compliance with the provisions in this Agreement and the Policy.

ARTICLE XII

JOINT ADMINISTRATIVE COMMITTEE

12.1 The Parties to this Agreement may establish an eight (8) person Joint Administrative Committee (JAC). This JAC shall be comprised of one (1) representative selected by the Board; one (1) representative of the City Inspector of Public Works; one (1) representative of the City Engineer; one (1) representative of the prime contractor, and four (4) representatives of the signatory Unions to be appointed by the Trades Council, to be chaired jointly by a representative of the City Inspector of Public Works and the Council. Each representative shall designate an alternate who shall serve in his or her absence.

12.2 The JAC shall meet at the call of either of the joint chairs to discuss the implementation and administration of this Agreement, the progress of the Project, general labor management problems that may arise, and any other matters consistent with this Agreement. A unanimous decision of the JAC shall be final and binding upon all Parties. However, the JAC shall have no authority to make determinations upon or to decide grievances arising under this Agreement.

12.3 A quorum will consist of at least two (2) City and two (2) signatory union

representatives. For voting purposes, only an equal number of City and signatory union representatives present may constitute a voting quorum.

ARTICLE XIII

GRIEVANCE ARBITRATION PROCEDURE

13.1 The Parties hereby agree that all grievances and disputes that may arise concerning the meaning, application or the interpretation of the terms of this Agreement, other than disputes arising from conduct described in Sections 4.1 and 4.2, Article IX (Employee Grievance Procedure) and Sections 14.1, 14.2, 14.3 and 14.4 shall be settled in accordance with the following procedures set out herein. Grieving parties are encouraged to meet as soon as possible and try to resolve the dispute. However, if a resolution cannot be reached, the following procedure shall be used.

13.2 Grievances and disputes shall be settled according to the following procedures:

Step 1: The business representative of the local Union involved shall first attempt to settle the matter by oral discussion with the particular C/S/E's representative no later than five (5) working days after the Union submitting the grievance first became aware of, or by the use of reasonable diligence should have been aware of, the occurrence first giving rise to the dispute or grievance. If the matter is not resolved with the C/S/E's representative within five (5) working days after the oral discussion with said C/S/E's representative, the dispute or grievance shall be reduced to writing by the grieving Union.

Step 2: In the event that the representatives (C/S/E and Union) are unable to resolve

the grievance after its referral to Step 1, either involved party may submit the grievance, within five (5) business days of the Step 1 meeting of the parties to the grievance, to the Joint Administrative Committee (JAC), which shall meet within five (5) business days after such referral (or such longer time as is mutually agreed upon by all representatives of the JAC), to confer in an attempt to resolve the grievance. If the grievance is not resolved by the parties to the grievance within five (5) business days after its referral (or such longer time as is mutually agreed on by all representatives of the JAC) to the JAC, it may be referred within five (5) business days by either party to Step 3 by written notice of the submittal of the grievance to arbitration in accordance with the provisions set forth below.

Step 3: After notice by any party of intent to submit a grievance to arbitration, the Parties shall have five (5) working days to attempt, by mutual agreement, to select as the Arbitrator to hear the dispute, one of the Arbitrators listed under the Expedited Arbitration provisions of Article IV, Section 4.3 of this Agreement. If the Parties are unable to reach such agreement, the first arbitrator from the list, on a rotational basis, shall be the arbitrator to hear the dispute. The decision of the Arbitrator shall not have the authority to alter, amend, add to or delete from the provisions of this Agreement in any way. A failure of any party to attend said hearing shall not delay the hearing of evidence or the issuance of any decision by the Arbitrator. The fees and expenses incurred in arbitration shall be divided equally by the parties (the applicable Union and Contractor) to the arbitration. Should any party seek

confirmation of the Award made by the Arbitrator, the prevailing party shall be entitled to receive its reasonable attorney fees and costs.

13.3 The time limits specified in any step of the Grievance Arbitration Procedure set forth in Section 13.2 may be extended by mutual agreement of the Parties. However, failure to process a grievance, or failure to respond in writing within the time limits provided above, without a request for an extension of time, shall be deemed a waiver of such grievance without prejudice, or without precedent to the processing and/or resolution of like or similar grievances.

13.4 Grievances which are settled directly by the Parties to such grievance shall not be precedent setting.

13.5 The City or its designated representative shall be given advance notification of all proceedings of all actions at Steps 2 and 3 and may observe such proceedings upon request.

ARTICLE XIV

JURISDICTIONAL DISPUTES / PRE-JOB CONFERENCE

14.1 The assignment of work will be solely the responsibility of the C/S/E performing the work involved; and such work assignments will be in accordance with the Plan for the Settlement of Jurisdictional Disputes in the Construction Industry (the "Plan") or any successor plan.

14.2 All jurisdictional disputes on this Project, between or among Building and Construction Trades Unions and employers shall be settled and adjusted according to the present Plan established by the Building and Construction Trades

Department or any other plan or method of procedure that may be adopted in the future by the Building and Construction Trades Department. Decisions rendered shall be final, binding and conclusive on the C/S/Es and Unions. A decision shall not award back pay or any other damages for a misassignment of work, nor may any party bring an independent action for back pay or any other damages based upon a decision.

14.3 If a dispute arising under this Article involves the Southwest Regional Council of Carpenters or any of its subordinate bodies, an Arbitrator shall be chosen by the procedures specified in Article V, Section 5, of the Plan from a list composed of John Kagel, Thomas Angelo, Robert Hirsch and Thomas Pagan. The Arbitrator's hearing on the dispute shall be held at the offices of the Council within fourteen (14) days of the selection of the Arbitrator. All other procedures shall be as specified in the Plan.

14.4 No Work Disruption Over Jurisdiction. All jurisdictional disputes shall be resolved without the occurrence of any strike, work stoppage, disruption, or slowdown of any nature and the C/S/E's assignments shall be adhered to until the dispute is resolved. Individuals violating this section shall be subject to immediate discharge.

14.5 Pre-Job Conference. A pre-job conference shall be held with all parties prior to the start of work by the prime contractor for the Covered Project covered by this Agreement. The purpose of the conference will be to, among other things, determine craft manpower needs, schedule of work for the contract and project work rules/owner rules. The subcontractors/owner operators of any tier will be advised in advance of all such conferences and shall participate. The Trades

Council and the BCA's Office of Contract Compliance shall be advised in advance of all such conferences and may participate if they wish. All work assignments shall be disclosed by the C/S/E at a pre-job conference. Any formal jurisdictional dispute raised under Article XIV must be raised at the pre-job conference upon disclosure of the work assignments. If the C/S/E intends to change the work assignment after the pre-job conference or to make an assignment of work not previously known, the C/S/E must notify the appropriate affected craft union(s) prior to the commencement of work. The C/S/E performing all project work that was not previously assigned at the pre-job conference will conduct a separate pre-job conference for such newly assigned work prior to commencing such work.

ARTICLE XV

MANAGEMENT RIGHTS

15.1 The C/S/Es shall retain full and exclusive authority for the management of their operations, as set forth in this Article, unless expressly limited or required by the other Articles of this Agreement on an MLA. This includes, but is not limited to, the right to direct their working force and to establish coordinated working hours and starting times.

15.2 There shall be no limit on production by workers or restrictions on the full use of tools or equipment. Craftsmen using tools shall perform any of the work of the trades and shall work under the direction of the craft foremen. There shall be no restrictions on efficient use of manpower other than as may be required by safety regulations. The C/S/Es may utilize the most efficient methods or techniques of

construction, tools or other labor-saving devices to accomplish the work. Restrictive practices not a part of the terms and conditions of this Agreement will not be recognized.

15.3 The C/S/Es shall be the sole judge of the number and classifications of employees required to perform work subject to this Agreement. The C/S/Es shall have the absolute right to hire, promote, suspend, discharge or lay off employees at their discretion and to reject any applicant for employment, subject to the provisions of the respective craft collective bargaining agreement between the particular C/S/E and Union and pursuant to this Agreement.

15.4 Nothing in this Agreement shall be construed to limit the right of any of the C/S/Es to select the lowest bidder they deem qualified for the award of contracts or subcontracts or material, supplies, or equipment purchase orders on the Covered Project. The right of ultimate selection remains solely with the C/S/E in accordance with the construction contract.

15.5 It is recognized that certain materials, equipment and systems of a highly technical and specialized nature will have to be installed at the Covered Project. The nature of the materials or the nature of the equipment and systems, together with requirements of manufacturer's warranty, may dictate that it will be pre-fabricated, pre-piped, pre-wired and/or installed under the supervision and direction of the DPW, City and/or manufacturer's personnel. The Unions agree that such materials, equipment and systems shall be installed without the occurrence of any conduct described in Sections 4.1 or 4.2.

ARTICLE XVI

SAFETY, PROTECTION OF PERSON AND PROPERTY

16.1 It shall be the responsibility of each C/S/E to ensure safe working conditions and employee compliance with any safety rules contained herein or established by the DPW, City, the state and the C/S/E. It is understood that the employees have an individual obligation to use diligent care to perform their work in safe manner and to protect themselves and the property of the C/S/E, the City and the DPW.

16.2 Employees shall be bound by the safety, security and visitor rules established by the C/S/E and the DPW. These rules will be published and posted in conspicuous places throughout the work site. An employee's failure to satisfy his or her obligations under this Section will subject him or her to discipline, including discharge.

16.3 The Parties acknowledge that the City and the C/S/E have a policy, which prohibits the use, sale, transfer, purchase and/or possession of a controlled substance, alcohol and/or firearms while on the City's premises. Additionally, the C/S/E has a "drug free" work place policy, which prohibits those working on the City's premises from having a level of alcohol in their system, which could indicate impairment, and/or any level of controlled substances (i.e., illegal drugs) in their system.

16.4 To that end, the Parties agree to adopt the Los Angeles/Orange Counties Building and Construction Trades Council Approved Drug and Alcohol Testing Policy, a copy of which is attached hereto as Attachment B which shall be the policy and procedure utilized under this Agreement.

ARTICLE XVII

SAVINGS CLAUSE

17.1 The Parties agree that in the event any article, provision, clause, sentence or work of the Agreement is determined to be illegal or void as being in contravention of any applicable law, by a court of competent jurisdiction, the remainder of this Agreement shall remain in full force and effect. The Parties further agree that if any article, provision, clause, sentence or word of this Agreement is determined to be illegal or void, by a court of competent jurisdiction, the Parties shall substitute, by mutual agreement, in its place and stead, an article, provision, sentence or word which will meet the objections to its validity and which will be in accordance with the intent and purpose of the article, provision, clause, sentence or word in question.

17.2 The Parties also agree that in the event that a decision of a court of competent jurisdiction materially alters the terms of this Agreement such that the intent of the Parties is defeated, then the entire Agreement shall be null and void.

17.3 If a court of competent jurisdiction determines that all or part of the Agreement is invalid and/or enjoins the City or DPW from complying with all or part of its provisions and the Board accordingly determines that the Agreement will not be required as part of an award to a C/S/E, the Unions will no longer be bound by the provisions of Article IV to the extent that such C/S/E is no longer bound. The Unions and their members shall remain bound to Article IV with respect to all other C/S/Es who remain bound to this Agreement, and no action taken by the Unions or their members shall disrupt the work of such C/S/Es.

17.4 The provisions of this Agreement shall not be applicable where prohibited by Presidential Executive Order, Federal or State law, or where the application would be inconsistent with terms and conditions of a grant or a contract with the agency of the United States, State of California, or the instruction of an authorized representative of any of these agencies with respect to any grant or contract.

ARTICLE XVIII

STEWARD

18.1 Each Union shall have the right to designate a working craft employee as steward for each C/S/E employing such craft on the Project. Such designated steward shall be a qualified workman assigned to a crew and shall perform the work of the craft. The steward shall not perform supervisory duties. Under no circumstances shall there be nonworking stewards. Stewards shall be permitted a reasonable amount of time during working hours to perform applicable Union duties related to the work being performed by the craft employees of his/her C/S/E and not to the work being performed by other C/S/Es or their employees.

18.2 Authorized representatives of the Union(s) shall have access to the Covered Project, provided that such representatives fully comply with posted visitor, security, and safety rules and the environmental compliance requirements of the Covered Project, provided that they do not unnecessarily interfere with the employees or cause them to neglect their work. The Contractor recognizes the right of access set forth in this Section and such access will not be unreasonably withheld from an authorized representative of the Union.

ARTICLE XIX

TERM

19.1 This Agreement shall commence upon execution by all Parties (the City of Los Angeles Department of Public Works and the Los Angeles/Orange Counties Building and Construction Trades Council and the Craft Unions signatory to this Agreement) and shall continue in full force and effect from the date of execution by all Parties for a period of ten years. During the term of this Agreement, upon request by either Party or by mutual consent, the Parties will meet to discuss the application of, and their experience with, this Agreement. As a result of any such meeting, the Parties may, but shall not be obligated to, mutually agree to amendments or modification of this Agreement.

19.2 The Agreement shall continue in full force and effect for each covered Project until project acceptance by the Board. Either party desiring to renew, extend or to negotiate changes to this Agreement upon expiration, shall make such intention known to the other party by written notice thereof not less than six (6) months prior to the expiration of this Agreement.

19.3 Any covered Project awarded during the term of this Agreement shall continue to be covered hereunder, until completion of the Project, notwithstanding the expiration date of this Agreement.

IN WITNESS WHEREOF, the Parties hereto have executed this Agreement on the day and year written below. THE UNION OFFICIALS signing this Agreement warrant and represent that they are authorized to collectively bargain on behalf of the organizations whom they represent and the members of such organizations.

APPROVED AS TO FORM:

Michael N. Feuer, City Attorney

By: _____ Date: 08/25/21

Edward M. Jordan
Assistant City Attorney

THE CITY OF LOS ANGELES DEPARTMENT OF PUBLIC WORKS

By: _____ Date: 8/18/21

Greg Good
President, Board of Public Works

LOS ANGELES/ORANGE COUNTY BUILDING AND CONSTRUCTION TRADES COUNCIL

By: _____ Date: 8-18-2021

Chris Hannan
Executive Secretary
Los Angeles/Orange County Building
And Construction Trades Council

DocuSign Envelope ID: 605F8A59-AB86-4A83-A0F3-FB4D3420C3FB

Union Signatory Page

Asbestos Heat & Frost Insulators (Local 5)	DocuSigned by: Mike Patterson 1A199ACC98CF44A...
Boilermakers (Local 92)	DocuSigned by: Luis Miramontes 83A563BEFB6E48F...
Bricklayers & Allied Craftworkers (Local 4)	DocuSigned by: Lupe Aldaco EA7AF8519EAE486...
Cement Masons (Local 500)	DocuSigned by: Jack Alvarado 5C861A00E44B47F...
Cement Masons (Local 600)	DocuSigned by: Fitzgerald Jacobs 11D37668D2404C2...
Electricians (Local 11)	DocuSigned by: Joel Barton 0B2719AFC830491...
Elevator Constructors (Local 18)	DocuSigned by: Tony Gazzaniga 859D63C5C38B417...
Gunite Workers (Local 345)	DocuSigned by: Ed Learn (Gunite#345) AE8FEA548C1F413...
Iron Workers (Reinforced – Local 416)	DocuSigned by: 8D6889688F6042C...
Iron Workers (Structural – Local 433)	DocuSigned by: K A R CE4172C82FEB4CC...
Laborers (Local 300)	DocuSigned by: SERGIO RASCON 6D9520D1C3F9449...
Laborers (Local 1309)	DocuSigned by: Mario Scales LiUNA Local 1309 D7E1A203FEB4485...
Laborers (Local 1184)	DocuSigned by: B589A3D2C62940C...
Operating Engineers (Local 12)	DocuSigned by: Ron Sikorski 5D003BB73A404FA...
Operating Engineers (Local 12)	DocuSigned by: Larry Davison 5D003BB73A404FA...
Operating Engineers (Local 12)	DocuSigned by: David Sikorski 5D003BB73A404FA...
Painters & Allied Trades DC 36	DocuSigned by: Mark Bartlett 4C5DDB45A248484...
Pipe Trades (Plumbers Local 78)	DocuSigned by: Jeremy Diaz 8C908D2564A148A...
Pipe Trades (Pipe Fitters Local 250)	DocuSigned by: Glenn Santa Cruz EE234144314245D...
Pipe Trades (Local 345)	DocuSigned by: Ricardo Perez 8C144FFD6F5F464...
Pipe Trades (Plumbers/Fitters Local 761)	DocuSigned by: Greg Lewis 5496394F0F9C40F...
Pipe Trades (Sprinkler Fitters Local 709)	DocuSigned by: Todd Golden 6D95CFF26138497...
Plasterers (Local 200)	DocuSigned by: Tom Castleman CAB4C75A182544C...
Plaster Tenders (Local 1414)	DocuSigned by: Jim Preciado F2AB8D6BA0D54E8...
Roofers & Waterproofers (Local 36)	DocuSigned by: Cliff Smith E6074B80D99147F...
Sheet Metal Workers (Local 105)	DocuSigned by: Luther Medina 0265ZCEE45734FE...
Teamsters (Local 986)	DocuSigned by: Caesar Borgas (Teamsters#986) B9F79ED2514D410...
Southwest Regional Council of Carpenters	DocuSigned by: Stephen Aranda 866C6F622624439...
District Council of Laborers	DocuSigned by: Jon Preciado 9D151D075BAB44A...
Department of Public Works	

ATTACHMENT "A"

COMPANY LETTERHEAD

Date: _____

Mr. John L. Reamer, Jr., Inspector of Public Works
City of Los Angeles
Bureau of Contract Administration
1149 S. Broadway, Suite 300
Los Angeles, CA 90015

PROJECT NAME: _____

Dear Mr. Reamer:

This is to certify that the undersigned Contractor/Subcontractor/Employer (C/S/E) has read and understood the Project Labor Agreement (PLA) entered into by and between the City of Los Angeles Department of Public Works (DPW) and the Los Angeles/Orange Counties Building and Construction Trades Councils and Unions dated _____ and the DPW Public Works Infrastructure Stabilization Policy (Policy). The undersigned C/S/E hereby agrees to comply with all of the terms and conditions of the aforementioned duly signed PLA and DPW Policy.

The undersigned C/S/E acknowledges that compliance with the provisions relating to Local Hire and Transitional Workers (Articles 7.3, 7.6, 7.7 & 7.10), Workforce Referral and Development (Articles 7.1, 7.4, 7.5, 7.8 & 7.10), and Apprenticeship Participation (Article 7.7 & 7.11) is of particular importance.

It is understood that the signing of the Letter of Assent shall be as binding on the undersigned C/S/E as though the C/S/E had signed the DPW PLA and shall require all its subcontractors, of whatever tier, to become similarly bound for all work within the scope of this PLA and the DPW Policy.

This further certifies (per Articles 3, 11.2 & the Policy) that the undersigned C/S/E understands that submission of this Letter of Assent and employment hiring plan will be required prior to the commencement of any work in relation to this contract. Non-submittal of this letter and all required hiring plan documentation may preclude the C/S/E from being approved to work on this project.

This Letter of Assent shall become effective and binding upon the undersigned C/S/E the _____ day of _____, _____, and shall remain in full force and effect until the completion of the above stated project.

Sincerely,
(Name of Construction Company)

By: _____
(Name and Title of Authorized Executive)

_____
(Contractor's State License No.)

ATTACHMENT "B"

LOS ANGELES/ORANGE COUNTIES

BUILDING AND CONSTRUCTION TRADES COUNCIL

APPROVED

DRUG AND ALCOHOL TESTING POLICY

(rev. December 2019)

The Parties recognize the problems which drug and alcohol abuse have created in the construction industry and the need to develop drug and alcohol abuse prevention programs. Accordingly, the Parties agree that in order to enhance the safety of the workplace and to maintain a drug and alcohol-free work environment, individual Employers may require applicants or employees to undergo drug and alcohol testing.

1. It is understood that the use, possession, transfer or sale of illegal drugs, narcotics, or other unlawful substances, as well as being under the influence of alcohol and the possession or consuming alcohol is absolutely prohibited while employees are on the Employer's job premises or while working on any jobsite in connection with work performed under the Project Labor Agreement ("PLA").

2. No Employer may implement a drug testing program which does not conform in all respects to the provisions of this Policy.

3. No Employer may implement drug testing at any jobsite unless written notice is given to the Union setting forth the location of the jobsite, a description of the project under construction, and the name and telephone number of the Project Supervisor. Said notice shall be addressed to the office of each Union signing the CWA. Said notice shall be sent by email or by registered mail before the implementation of drug testing. Failure to give such notice shall make any drug testing engaged in by the Employer a violation of the CWA, and the Employer may not implement any form of drug testing at such jobsite for the following six months.

4. An Employer who elects to implement drug testing pursuant to this Agreement shall require all employees on the Project to be tested. With respect to individuals who become employed on the Project subsequent to the proper implementation of a valid drug testing program, such test shall be administered upon the commencement of employment on the project, whether by referral from a Union Dispatch Office, transfer from another project, or another method. Individuals who were employed on the project prior to the proper implementation of a valid drug testing program may only be subjected to testing for the reasons set forth in paragraphs 5(g)(l) through 5(g)(3) and paragraphs 6(a) through 6(e) of this Policy. Refusal to undergo such testing shall be considered sufficient grounds to deny employment on the project.

5. The following procedure shall apply to all drug testing:

a. The Employer may request urine samples only. The applicant or employee shall not be observed when the urine specimen is given. An applicant or employee, at his or her sole option, shall, upon request, receive a blood test in lieu of a urine test. No employee of the Employer shall draw blood from a bargaining unit employee, touch or handle urine specimens, or in any way become involved in the chain of custody of urine or blood specimens. A Union Business Representative, subject to the approval of the individual applicant or employee, shall be permitted to accompany the applicant or employee to the collection facility to observe the collection, bottling, and sealing of the specimen.

b. An employer may request an applicant to perform an alcohol breathalyzer test, at a certified laboratory only and cutoff levels shall be those mandated by applicable state or federal law.

c. The testing shall be done by a laboratory approved by the Substance Abuse & Mental Health Services Administration (SAMHSA), which is chosen by the Employer and the Union.

d. An initial test shall be performed using the Enzyme Multiplied Immunoassay Technique (EMIT). In the event a question or positive result arises from the initial test, a confirmation test must be utilized before action can be taken against the applicant or employee. The confirmation test will be by Gas Chromatography/Mass Spectrometry (GC/MS). Cutoff levels for both the initial test and confirmation test will be those established by SAMHSA. Should these SAMHSA levels be changed during the course of this Agreement or new testing procedures are approved, then these new regulations will be deemed as part of this existing Agreement. Confirmed positive samples will be retained by the testing laboratory in secured long-term frozen storage for a minimum of one year. Handling and transportation of each sample must be documented through strict chain of custody procedures.

e. In the event of a confirmed positive test result the applicant or employee may request, within forty-eight (48) hours, a sample of his/her specimen from the testing laboratory for purposes of a second test to be performed at a second laboratory, designated by the Union and approved by SAMHSA. The retest must be performed within ten (10) days of the request. Chain of custody for this sample shall be maintained by the Employer between the original testing laboratory and the Union's designated laboratory. Retesting shall be performed at the applicant's or employee's expense. In the event of conflicting test results the Employer may require a third test.

f. If, as a result of the above testing procedure, it is determined that an applicant or employee has tested positive, this shall be considered sufficient grounds to

deny the applicant or employee his/her employment on the project.

g. No individual who tests negative for drugs pursuant to the above procedure and becomes employed on the project shall again be subjected to drug testing with the following exceptions:

1. Employees who are involved in industrial accidents resulting in damage to plant, property or equipment or injury to him/her or others may be tested for drug or alcohol pursuant to the procedures stated hereinabove.

2. The Employer may test employees following thirty (30) days advance written notice to the employee(s) to be tested and to the applicable Union. Notice to the applicable Union shall be as set forth in paragraph 3 above and such testing shall be pursuant to the procedures stated hereinabove.

3. The Employer may test an employee where the Employer has reasonable cause to believe that the employee is impaired from performing his/her job. Reasonable cause shall be defined as being aberrant or unusual behavior, the type of which is a recognized and accepted symptom of impairment (i.e., slurred speech, unusual lack of muscular coordination, etc.). Such behavior must be actually observed by at least two persons, one of whom shall be a supervisor who has been trained to recognize the symptoms of drug abuse or impairment and the other of whom shall be the Job Steward. If the Job Steward is unavailable or there is no Job Steward on the project the other person shall be a member of the applicable Union's bargaining unit. Testing shall be pursuant to the procedures stated hereinabove. Employees who are tested pursuant to the exceptions set forth in this paragraph and who test positive will be removed from the Employer's payroll.

h. Applicants or employees who do not test positive shall be paid for all time lost while undergoing drug testing. Payment shall be at the applicable wage and benefit rates set forth in the applicable Union's Master Labor Agreement. Applicants who have been dispatched from the Union and who are not put to work pending the results of a test will be paid waiting time until such time as they are put to work. It is understood that an applicant must pass the test as a condition of employment. Applicants who are put to work pending the results of a test will be considered probationary employees.

6. The Employers will be allowed to conduct periodic jobsite drug testing on the Project under the following conditions:

a. The entire jobsite must be tested, including any employee or subcontractor's employee who worked on that project three (3) working days before or after the date of the test;

b. Jobsite testing cannot commence sooner than fifteen (15) days after start of the work on the project;

c. Prior to start of periodic testing, a Business Representative will be allowed to conduct an educational period on company time to explain periodic jobsite testing program to affected employees;

d. Testing shall be conducted by a SAMHSA certified laboratory, pursuant to the provisions set forth in paragraph 5 hereinabove.

e. Only two (2) periodic tests may be performed in a twelve (12) month period.

7. It is understood that the unsafe use of prescribed medication, or where the use of prescribed medication impairs the employee's ability to perform work, is a basis for the Employer to remove the employee from the jobsite.

8. Any grievance or dispute which may arise out of the application of this Agreement shall be subject to the grievance and arbitration procedures set forth in the CWA.

9. The establishment or operation of this Policy shall not curtail any right of any employee found in any law, rule or regulation. Should any part of this Agreement be found unlawful by a court of competent jurisdiction or a public agency having jurisdiction over the parties, the remaining portions of the Agreement shall be unaffected, and the parties shall enter negotiations to replace the affected provision.

10. Present employees, if tested positive, shall have the prerogative for rehabilitation program at the employee's expense. When such program has been successfully completed the Employer shall not discriminate in any way against the employee. If work for which the employee is qualified exists, he/she shall be reinstated.

11. The Employer agrees that results of urine and blood tests performed hereunder will be considered medical records held confidential to the extent permitted or required by law. Such records shall not be released to any persons or entities other than designated Employer representatives and the applicable Union. Such release to the applicable Union shall only be allowed upon the signing of a written release and the information contained therein shall not be used to discourage the employment of the individual applicant or employee on any subsequent occasion.

12. The Employer shall indemnify and hold the Union harmless against any and all claims, demands, suits, or liabilities that may arise out of the application of this Agreement and/or any program permitted hereunder.

13. Employees who seek voluntary assistance for substance abuse may not be disciplined for seeking such assistance. Requests from employees for such assistance shall remain confidential and shall not be revealed to other employees or management personnel without the employee's consent. Employees enrolled in substance abuse programs will be subject to all Employer rules, regulations and job performance standards with the understanding that an employee enrolled in such a program is receiving

treatment for an illness.

14. The parties agree to develop and implement a drug abuse prevention and testing program for all apprentices entering the industry.

15. This Memorandum of Understanding shall constitute the only Agreement in effect between the parties concerning drug and alcohol abuse, prevention and testing. Any modifications thereto must be accomplished pursuant to collective bargaining negotiations between the parties.

APPENDIX A: SPECIMEN REPORTING CRITERIA

Initial Test Analyte	Initial Test Cutoff [1]	Confirmatory Test Analyte	Confirmatory Test Cutoff Concentration
Marijuana metabolites (THCA)[2]	50 ng/ml [3]	THCA	15 ng/ml
Cocaine metabolite (Benzoylecgonine)	150 ng/ml [3]	Benzoylecgonine	100 ng/ml
Codeine/ Morphine	2000 ng/ml	Codeine Morphine	2000 ng/ml 2000 ng/ml
Hydrocodone/ Hydromorphone	300 ng/ml	Hydrocodone Hydromorphone	100 ng/ml 100 ng/ml
Alcohol	0.02%	Ethanol	0.02%
Oxycodone/ Oxymorphone	100 ng/ml	Oxycodone Oxymorphone	100 ng/ml 100 ng/ml
6-Acetylmorphine	10 ng/ml	6-Acetylmorphine	10 ng/ml
Phencyclidine	25 ng/ml	Phencyclidine	25 ng/ml
Amphetamine/ Methamphetamine	500 ng/ml	Amphetamine Methamphetamine	250 ng/ml 250 ng/ml

[1] For grouped analytes (i.e., two or more analytes that are in the same drug class and have the same initial test cutoff):

Immunoassay: The test must be calibrated with one analyte from the group identified as the target analyte. The cross-reactivity of the immunoassay to the other analyte(s) within the group must be 80 percent or greater; if not, separate immunoassays must be used for the analytes within the group.

Alternate technology: Either one analyte or all analytes from the group must be used for calibration, depending on the technology. At least one analyte within the group must have a concentration equal to or greater than the initial test cutoff or, alternatively, the sum of the analytes present (i.e., equal to or greater than the laboratory's validated limit of quantification) must be equal to or greater than the initial test cutoff.

[2] An immunoassay must be calibrated with the target analyte, 9-tetrahydrocannabinoJ-9- carboxylic acid (THCA).

[3] **Alternate technology (THCA and benzoylecgonine):** The confirmatory test cutoff must be used for an alternate technology initial test that is specific for the target analyte (i.e., 15 ng/ml for THCA, 100 ng/ ml for benzoylecgonine).

MDMA[4]/MDA[5]	500 ng/ml	MDMA MDA	250 ng/ml 250 ng/ml
Initial Test Analyte	Initial Test Cutoff	Confirmatory Test Analyte	Confirmatory Test Cutoff Concentration
Barbiturates	300 ng/ml	Barbiturates	200 ng/ml
Benzodiazepines	300 ng/ml	Benzodiazepines	300 ng/ml
Methadone	300 ng/ml	Methadone	100 ng/ml
Methaqualone	300 ng/ml	Methaqualone	300 ng/ml
Propoxyphene	300 ng/ml	Propoxyphene	100 ng/ml

[4] Methylenedioxymethamphetamine (MDMA)
[5] Methylenedioxyamphetamine (MDA)

SIDE LETTER OF AGREEMENT
TESTING POLICY FOR DRUG ABUSE

It is hereby agreed between the parties hereto that an Employer who has otherwise properly implemented drug testing, as set forth in the Testing Policy for Drug Abuse, shall have the right to offer an applicant or employee a "quick" drug screening test. This “quick” screen test shall consist either of the “ICUP” urine screen or similar test or an oral screen test. The applicant or employee shall have the absolute right to select either of the two “quick” screen tests, or to reject both and request a full drug test.

An applicant or employee who selects one of the "quick" screen tests, and who passes the test, shall be put to work immediately. An applicant or employee who fails the "quick" screen test, or who rejects the "quick" screen tests, shall be tested pursuant to the procedures set forth in the Testing Policy for Drug Abuse. The sample used for the "quick" screen test shall be discarded immediately upon conclusion of the test. An applicant or employee shall not be deprived of any rights granted to them by the Testing Policy for Drug Abuse as a result of any occurrence related to the “quick” screen test.

ATTACHMENT "C"

CITY OF LOS ANGELES DEPARTMENT OF PUBLIC WORKS
BUREAU OF CONTRACT ADMINISTRATION
REQUEST/VERIFICATION FOR CRAFT EMPLOYEES
(*Project:* _____)

INSTRUCTIONS

To the Contractor:

Please complete and fax this form to the applicable union to request craft workers that fulfill all hiring requirements for the City of Los Angeles project. After faxing your request, call the Local to verify receipt and substantiate their capacity to furnish local, transitional or general dispatch as requested. Contact information for Locals is listed on back of form. Please print your Fax Transmission Verification Report and keep a copy of this request for your records.

To the Union:

Please complete the "Union Use Only" section and fax form back to the requesting contractor. Retain form for your records.

To:	Local	Fax# ( )	Date:
From – Company Name			
Person Sending:		Contact Phone: ( )	

Please provide me with union craft workers per the City of Los Angeles Department of Public Works PLA that fulfills the requirements for this project as defined below:

30% Local Requirement (Union craft employees, including apprentices, who reside in the local metropolitan area zip codes listed below. If unavailable, can be dispatched from any one of the zip codes listed in Attachment).

SEE ATTACHED TIER 1 AND TIER 2 ZIP CODES

10% "Transitional Worker" Requirement (Union craft employees, including apprentices, who live in one of the zip codes listed in Attachment, and are certified to fulfill the "Transitional worker" hiring requirement).

General Dispatch (Union craft employees dispatched per normal dispatch procedures, not including the 30% Local or 10% Transitional Worker requirements)

Employee Name	Address	Zip Code

Craft Employees Requested						
Job/Craft Description	Journeyman / Apprenticeship Level	Number(s) Requested			Report Date	Report Time
		30% Local	10% Transitional	General Dispatch		

Total Workers Requested_____

Please have worker(s) report to the following address indicated below:

Site Address: _____ **Report to (On-Site Contact):** _____

On-Site Tel.#: ( ) **Fax: ( )** _____

Comments or special requirements:

Union Use Only

(Fax the Completed Form Back to Contractor)

Reception Date:	Dispatch Date:	Received By:
Requested Dispatch	**Available for Dispatch**	**Unavailable for Dispatch**
30% Local	☐	☐
10% Transitional	☐	☐
General Dispatch	☐	☐

Comments:

ATTACHMENT "D"

Los Angeles Department of Public Works
PLA Construction Trade Unions Contact Numbers

Asbestos Heat & Frost Insulators Local 5
3833 Ebony St.
Ontario, CA 91761
Telephone: (909) 390-3401
Fax: (909) 390-3405

Boilermakers Local 92
2260 S. Riverside Avenue
Bloomington, CA 92316
Telephone: (909) 877-9382
Fax: (909) 877-8318

Bricklayers & Allied Craftworkers Local 4
2679 Sierra Way
LA Verne, CA 91750
Telephone: (626) 739-5600
Fax: (626) 739-5610

Drywall Finishers Local 1136
1155 Corporate Center Drive
Monterey Park, CA 91754
Telephone: (626) 296-8003
Fax: (626) 296-8076

Electricians Local 11
297 N. Marengo Avenue
Pasadena, CA 91101
Telephone: (626) 243-9700
Fax: (626) 793-9750

Elevator Constructors Local 18
2011 E Financial Way
Glendora, CA 91741
Telephone: (800) 428-5226
Fax: None

Operating Engineers Local 12
150 E. Corson
Pasadena, CA 91103
Telephone: (626) 792-8900
Fax: (626) 792-9039

Glaziers Local 636
1155 Corporate Center Dr.
Monterey Park, CA 91754
Telephone: (626) 448-1565
Fax: (626) 797-5998

Gunite Workers Local 345
P.O. Box 3339
Burbank, CA 91508
Telephone: (818) 846-1303
Fax: (818) 846-1226

Iron Workers (Reinforced) Local 416
13830 San Antonio Dr.
Norwalk, CA 90650
Telephone: (562) 868-1251
Fax: (562) 868-1429

Iron Workers (Structural) Local 433
17495 Hurley St. East
City of Industry, CA 91744
Telephone: (626) 964-2500
Fax: (626) 964-1754

Laborers Local 300
2005 W. Pico Blvd.
Los Angeles, CA 90006
Telephone: (213) 385-3550
Fax: (213) 385-6985

Laborers Local 1184
1128 La Cadena Dr.
Riverside, CA 92507
Telephone: (951) 684-1484
Fax: (951) 779-1445

Laborers Local 1309
3971 Pixie Ave.
Lakewood, CA 90712
Telephone: (562) 421-9346
Fax: (562) 421-5964

Painters & Allied Trades DC 36
1155 Corporate Center Drive
Monterey Park, CA 91754
Telephone: (626) 584-9925
Fax: (626) 584-1949

Plaster Tenders Local 1414
1055 W. Second Street
Pomona, CA
Telephone: (909) 622-8500
Fax: (909) 623-5244

Pipe Trades Local 250
Steamfitters/Air Conditioning/ Refrigeration / Industrial Pipefitters
18355 S. Figueroa St.
Gardena, CA 90248
Steamfitters: Tel: (310) 660-0035
AC/Refrig. Tel: (310) 660-0045
FAX: (310) 329-2465

Pipe Trades Local 345
Landscape, Irrigation, Underground & Specialty Piping
1430 Huntington Dr.
Duarte, CA 91010
Telephone: (626) 357-9345
Fax: (626) 359-0359

Pipe Trades Local 709
Sprinkler Fitters
12140 Rivera Road
Whittier, CA 90606
Telephone: (562) 698-9909
Fax: (562) 698-7255

Plumbers Local 78
1111 W. James Wood Blvd.
Los Angeles, CA 90015
Telephone: (213) 688-9090
Fax: (213) 627-4624

Plumbers Local 761
1305 N. Niagara St.
Burbank, CA 91505
Telephone: (818) 843-8670
Fax: (818) 843-5209

Plasterers Local 200
1610 W. Holt Ave
Pomona, CA 91768
Telephone: (909) 865-2240
Fax: (909) 865-9392

Cement Masons Local 500
331 Corporate Terrace Circle
Corona, CA 92879
Telephone: (714) 554-0730
Fax: (714) 265-0780

Cement Masons Local 600
5811 E. Florence Ave.
Bell Gardens, CA 90201
Telephone: (323) 771-0991
Fax: (323) 771-2631

Resilient Floor & Decorative Covering Local 1247
1155 Corporate Center Dr.
Monterey Park, CA 91754
Telephone: (626) 296-8048
Fax: (626) 296-8058

Roofers & Waterproofers Local 36
5380 Poplar Blvd.
Los Angeles, CA 90032
Telephone: (323) 222-0251
Fax: (323) 222-3585

Sheet Metal Workers Local 105
2120 Auto Centre Dr., Suite 105
Glendora, CA 91740
Telephone: (909) 305-2800
Fax: (909) 305-2822

Teamsters Local 986
1430 E. Holt Avenue
Covina, CA 91724
Telephone: (626) 350-9860
Fax: (626) 448-0986

Tradeshow and Sign Crafts
1155 Corporate Center Drive
Monterey Park, CA 91754
Telephone: (626) 296-8086
Fax: (626) 296-8087

Southwest Regional Council of Carpenters
533 S. Freemont Avenue, 10th Floor
Los Angeles, CA 90071
Telephone: (213) 385-1457
Fax: (213) 385-3759

ATTACHMENT "E"

Public Infrastructure Project Series (PIPS)
Department of Public Works
Public Infrastructure Stabilization Program Project List

	Project Title	Program Name	Est. Start
1	Vision Zero - Phase 2E Traffic Signal Improvements	Street Improvement	9/1/2021
2	LA Streetcar Project	Street Improvement	4/1/2025
3	Clean Water Campus (CWC)	TBD	4/2/2022
4	Hollywood Walk of Fame Renovation	Municipal Facilities Architect	7/24/2022
5	East West Valley Interceptor Sewer	Wastewater - CSP	7/31/2022
6	San Fernando Relief Sewer - Doran St to Division St	Wastewater - CSP	7/31/2023
7	North Hollywood Park Stormwater Capture	Stormwater	3/31/2022
8	HWRP- Solids Handling & Truck Load Facility	Wastewater - TPP	TBD
9	LAGWRP - Primary Effluent Equalization Storage	Wastewater - TPP	10/31/2021
10	NOS Rehab Unit 10 - 101 Fwy to Cardinal St.	Wastewater - CSP	2/2/2022
11	LA River Way - SF Valley Completion (Vanalden to Balboa)	Municipal Facilities Rec & Parks	6/30/2022
12	DCTWRP- Maintenance and Warehouse Facility Replacement	Wastewater - TPP	10/1/2021
13	LACERS' Building Buildout Analysis	Municipal Facilities Architect	2/1/2022
14	LAGWRP- Personnel Building	Wastewater - TPP	10/31/2021
15	First and Broadway Civic Center Park	Recreational & Cultural Facilities	8/1/2022
16	Channel 35 Studio Phase 1	Municipal Facilities Architect	TBD
17	NOS Rehab Unit 16 - Rigali Ave & Finch St	Wastewater - CSP	3/31/2026
18	NOS Rehab Unit 11 - Humboldt St to Cardinal St	Wastewater - CSP	7/31/2023
19	Valley Plaza Park North Stormwater Capture	Stormwater	3/31/2022
20	NOS Rehab Unit 15 - Petite Ct to Marsh St	Wastewater - CSP	2/28/2022
21	Paseo Del Mar (White Point) Permanent Restoration	Street Improvement	2/13/2022
22	HWRP- Co-Digestion Implementation Improvements	Wastewater - TPP	12/30/2021
23	DCTWRP- Multi-Purpose and Office Building	Wastewater - TPP	3/31/2023
24	DCTWRP- Primary Treatment Upgrades	Wastewater - TPP	3/31/2024
25	Warner Grand Theatre	Recreational & Cultural Facilities	4/1/2022
26	NOS Rehab Unit 33 - Magnolia Blvd to Woodman Ave	Wastewater - CSP	7/31/2023
27	Boyle Heights Sports Center - Gymnasium	Prop K	TBD
28	Venice Auxiliary Pumping Plant	Wastewater - TPP	7/17/2022
29	HTP- FOG Receiving Station North	Wastewater - TPP	7/2/2022
30	NOS Rehab Unit 20 & 21 - Zoo Dr. R/W to Doran St.	Wastewater - CSP	3/31/2023
31	CBD Sewer Rehab Unit 12 - Alameda to 14th Pl	Wastewater - CSP	7/31/2024
32	Venice High School Pool & Bathhouse Replacement	Municipal Facilities Rec & Parks	12/30/2022
33	David M. Gonzales Recreation Center Stormwater Capture	Stormwater	3/31/2022
34	Reseda Blvd, Reconstruction, Between Parthenia St. & Victory Blvd.	Street Improvement	TBD
35	Ballona Creek Water Quality Improvement	Wastewater - TPP	3/20/2022
36	CBD Sewer Rehab Unit 5 - Wisconsin St to Denker Ave	Wastewater - CSP	12/31/2023
37	Alameda St. Widening from Harry Bridges to Anaheim	Street Improvement	1/29/2022
38	ATP 4: Liechty Middle and Neighborhood ES	Street Improvement	6/7/2023
39	Hollywood Recreation Center - Modern Gym.	Prop K	3/1/2022

	Project Title (cont.)	Program Name	Est. Start
40	Reseda Skate Facility Development	Prop K	7/1/2022
41	Channel 35 Studio Phase 2	Municipal Facilities Architect	7/4/2022
42	CBD Sewer Rehab Unit 6 - Denker Ave to Van Ness Ave	Wastewater - CSP	12/31/2023
43	Highland Park Old Bank Building	Municipal Facilities Architect	3/1/2023
44	NOS Rehab Unit 35 - Noble to Cedros	Wastewater - CSP	10/2/2022
45	Highland Park Jr. Arts Center (Renovate Bldg)	Prop K	TBD
46	Asilomar Bl Landslide Mitigation (tie-back wall and grading)	Gas Tax	7/22/2022
47	Alameda St. Widening from Anaheim to PCH	Street Improvement	8/30/2022
48	CBD Sewer Rehab Unit 11 - 6th to Bay	Wastewater - CSP	8/31/2023
49	TIWRP- Digester Insulation Replacement	Wastewater - TPP	1/2/2022
50	Pershing Square Modernization - Phase 1B	Municipal Facilities Rec & Parks	3/1/2022
51	TIWRP- Phase I AWPF MF System Replacement	Wastewater - TPP	1/1/2024
52	HWRP- Digester Battery E Improvements	Wastewater - TPP	8/1/2021
53	Strathern Park North Stormwater Capture	Stormwater	3/31/2022
54	TIWRP- Service Maintenance & Warehouse Facility	Wastewater - TPP	12/3/2023
55	NOS Rehab Unit 29 - Beck Ave to Colfax Ave R/W	Wastewater - CSP	9/30/2021
56	Hollywood Sanitation Yard	Municipal Facilities Architect	1/3/2023
57	Highland Ave Street Improvements, Complete Streets	Street Improvement	1/1/2023
58	Avalon Blvd., Reconstruction, Between San Pedro St. and 120th St.	Street Improvement	6/15/2022
59	East Wilmington Sewer Project - Area A	Wastewater - CSP	7/31/2022
60	Aliso Creek - Limekiln Creek Restoration Project	Proposition O	7/13/2022
61	Studio City Recreation Center - Gymnasium	Prop K	7/2/2022
62	NOS Rehab Unit 27 - Vineland Ave to Forman Ave	Wastewater - CSP	12/31/2025
63	NOS Rehab Unit 30 - Colfax to Whitsett	Wastewater - CSP	1/2/2023
64	Fernangeles Park Stormwater Capture	Stormwater	3/31/2022
65	Exposition - West Bikeway - Northvale Segment	Street Improvement	6/2/2022
66	74th Street Sewer Rehab Unit 3 - Vermont Ave to 67th St	Wastewater - CSP	3/31/2022
67	HWRP- TSF Mechanical Equipment Upgrades	Wastewater - TPP	9/30/2021
68	CBD Sewer Rehab Unit 13 - 14th Pl to Main (CBD Unit 14)	Wastewater - CSP	8/31/2024
69	Whitsett Fields Park North Stormwater Capture	Stormwater	3/31/2022
70	TIWRP- Final Tanks Skimmer System Upgrade	Wastewater - TPP	7/2/2021
71	La Brea Ave Street Improvements, Complete Streets	Street Improvement	3/31/2023
72	Pio Pico Library Pocket Park and Underground Parking Structure	Municipal Facilities Rec & Parks	9/1/2021
73	South LA Wetlands - Building Demolition Assessment	Municipal Facilities Rec & Parks	2/28/2022
74	TIWRP- Primary Treatment Tanks Improvements	Wastewater - TPP	7/1/2024
75	NOS Rehab Unit 26 - Forman Ave & Olive Ave	Wastewater - CSP	12/31/2025
76	ATP Cycle 3- Arts District Pedestrian and Cyclist Safety Project	Street Improvement	6/1/2022
77	Victory Blvd (Phase 2) - De Soto to Canoga Ave	Street Improvement	7/2/2022
78	LAGWRP- Blower Air Cleanup System	Wastewater - TPP	10/4/2024
79	TIWRP- AWPF Emergency Generators	Wastewater - TPP	7/1/2021
80	LAGWRP- Headworks Improvements	Wastewater - TPP	1/2/2024
81	Burbank Blvd - Lankershim Blvd to Cleon Ave	Street Improvement	2/2/2022
82	Vermont Avenue East Primary Sewer Rehabilitation-Florence to 83rd	Wastewater - CSP	1/31/2023
83	Alexandria Park Stormwater Capture	Stormwater	3/31/2022

	Project Title (cont.)	Program Name	Est. Start
84	TIWRP- TIRE Facility Enhancement	Wastewater - TPP	7/31/2022
85	AHSC Round 4 - Weingart	Street Improvement	12/21/2022
86	HWRP- Equipment Storage Facility	Wastewater - TPP	10/3/2022
87	Figueroa Primary Sewer Rehabilitation-87th to 108th	Wastewater - CSP	1/31/2023
88	TIWRP- Headworks Biotrickling Filter Facility	Wastewater - TPP	8/1/2021
89	Potrero Canyon Pedestrian Bridge over Pacific Coast Highway	Municipal Facilities Architect	TBD
90	PP- 669 Harris Place Pumping Plant Rehab	Wastewater - TPP	11/30/2022
91	Rory Shaw/Strathern Wetlands Park (LA County)	Proposition O	TBD
92	Naomi Ave Sewer Upsizing	Wastewater - CSP	11/2/2022
93	Old Washington Irving Library Building Renovation	Recreational & Cultural Facilities	3/30/2023
94	CBD Sewer Rehab Unit 16 - Broadway 4th to 7th	Wastewater - CSP	8/31/2023
95	SSRP D CON 01 (P02)	Wastewater - CSP	11/2/2021
96	74th Street Sewer Rehab Unit 2 - 67th St to Western Ave	Wastewater - CSP	7/17/2025
97	DAR 08 Westchester and Wilshire	Wastewater - CSP	9/30/2022
98	Asphalt Plant No. 1 - Phase 2	Municipal Facilities Architect	1/1/2022
99	HWRP- Dilute Polymer System Improvements	Wastewater - TPP	3/1/2022
100	CIP-Branford St at Arleta Ave SD	Stormwater	10/6/2022
101	Topanga CPS Solar PV System	Municipal Facilities Architect	TBD
102	Pershing Square Implementation - Phase 1	Municipal Facilities Rec & Parks	8/1/2021
103	Culver Blvd Improvements, Complete Streets	Street Improvement	9/1/2022
104	Silver Lake Reservoir Stormwater Capture	Stormwater	3/3/2022
105	SSRP D CON 05 (H10 & N10)	Wastewater - CSP	2/28/2023
106	Zelzah Ave Street Improvements	Street Improvement	6/1/2023
107	Valley Plaza Park South Stormwater Capture	Stormwater	3/31/2022
108	CBD Sewer Rehab Unit 15 - James M. Wood Blvd to 11th St	Wastewater - CSP	8/31/2023
109	Sepulveda Channel Low Flow Treatment Facility (LFTF #2)	Wastewater - TPP	3/20/2022
110	Granada Hills Pool & Bathhouse Replacement	Municipal Facilities Rec & Parks	TBD
111	Magnolia Blvd (North) - Cahuenga Blvd to Vineland Ave	Street Improvement	3/17/2022
112	Madrid Theatre Renovations	Municipal Facilities Architect	1/3/2022
113	BSS Yard Relocation	Municipal Facilities Architect	3/28/2022
114	TIWRP- AWPF AOP Effluent Recirculation	Wastewater - TPP	1/29/2023
115	PP 648 Thompson Pumping Plant Rehab	Wastewater - TPP	11/30/2022
116	SSRP D CON 07 (H17A-E)	Wastewater - CSP	2/28/2022
117	7th Street Body Shop Replacement	Municipal Facilities Architect	2/1/2022
118	AHSC Round 3 - Elden Elms STI & TRA Improvements	Street Improvement	3/21/2022
119	HWRP- DSF Improvements	Wastewater - TPP	9/30/2022
120	ATP Cycle 3: Jefferson Blvd Complete Streets	Street Improvement	4/2/2022
121	HWRP- Ferric Chloride Facility Replacement	Wastewater - TPP	7/2/2021
122	North Central Yard Locker Improvement	Municipal Facilities Architect	TBD
123	DAR 07A North Hollywood / Sunland / Hollywood	Wastewater - CSP	TBD
124	WLAIS Rehab - Unit 1 - National & Barrington to Clover & Barry	Wastewater - CSP	7/31/2022
125	Valley Village Park Stormwater Capture	Stormwater	3/31/2022
126	CBD Sewer Rehab Unit 14 - Main to Grand (CBD Unit 13)	Wastewater - CSP	8/31/2024
127	SSRP D CON 02 (E20)	Wastewater - CSP	2/28/2022

	Project Title (cont.)	Program Name	Est. Start
128	Mission CPS Solar PV System	Municipal Facilities Architect	TBD
129	Anaheim Street Widening from Farragut Ave. to Dominguez Channel	Street Improvement	1/31/2022
130	PP 616 Cahuenga Pumping Plant Rehab	Wastewater - TPP	11/30/2022
131	Alameda St. Widening from Anaheim St. to 300 S/O PCH - East side Improvements	Street Improvement	2/21/2022
132	SSRP P02 Cesar Chavez Ave & Soto St	Wastewater - CSP	11/2/2021
133	ATP 4: 112th St. and Flournoy ES Safety IMPR Project	Street Improvement	6/7/2023
134	Concord Street Relief Sewer	Wastewater - CSP	5/31/2022
135	Cesar Chavez Ave/Lorena St/Indiana St - Roundabout	Street Improvement	3/1/2022
136	Boyle Heights/Cesar Chavez Great Streets -Brittania St. to Evergreen Ave. (DOT Proj)	Street Improvement	12/29/2021
137	SSRP H17D Adams Blvd & Budlong Ave	Wastewater - CSP	7/31/2022
138	HWRP- One Mile Chamber Pump Station	Wastewater - TPP	3/28/2022
139	LAGWRP- Sodium Hypochlorite Facility Relocation	Wastewater - TPP	10/3/2024
140	Culinary Arts Building Improvements	Municipal Facilities Architect	TBD
141	Rosecrans Recreation Child Care Center	Prop K	TBD
142	Taylor Yard Paseo del Rio Project	Municipal Facilities Architect	8/31/2022
143	GREEK THEATRE TERRACE DECK REPLACEMENT	TBD	TBD
144	SSRP H17C Arlington Av & 10 Freeway	Wastewater - CSP	3/2/2022
145	NCOS Jefferson/Holdrege Condensate Vault Rehab.	Wastewater - CSP	7/31/2022
146	AHSC Round 4 - Manchester Urban	Street Improvement	12/21/2022
147	Southern Pacific Trails	Prop K	TBD
148	AHSC Round 4 - Vermont and Manchester	Street Improvement	12/21/2022
149	SSRP H17B Pico Blvd and Vermont Ave	Wastewater - CSP	3/2/2022
150	DAR 07C North Hollywood / Sunland / Hollywood	Wastewater - CSP	4/30/2022
151	Devonshire PS Solar PV System	Municipal Facilities Architect	TBD
152	ATP Cycle 2- Boyle Heights Pedestrian Linkage	Street Improvement	8/1/2021
153	San Pedro City Hall Little Italy Plaza	Municipal Facilities Architect	2/1/2022
154	Sepulveda Basin HJELTE Field	Prop K	9/1/2023
155	DCTWRP- Ancillary Warehouse Facility Installation	Wastewater - TPP	9/30/2021
156	TIWRP- Polymer System Replacement	Wastewater - TPP	3/30/2022
157	HWRP- Abrasive Blast & Steam Cleaning Facility	Wastewater - TPP	9/30/2025
158	ATP 4: Alexandria Avenue ES Neighborhood Safety IMPR Project	Street Improvement	6/7/2023
159	HWRP- Headworks Fire Sprinkler System Replacement	Wastewater - TPP	TBD
160	SSRP H17A Gramercy Pl & Venice Blvd	Wastewater - CSP	3/2/2022
161	DAR 07D North Hollywood / Sunland / Hollywood	Wastewater - CSP	TBD
162	AHSC Round 3 - PATH Villas Hollywood STI and TRA Improvements	Street Improvement	5/1/2022
163	SSRP H17E Denker Av & Jefferson Bl	Wastewater - CSP	3/2/2022
164	Sheldon Arleta Phase III C - Baseball Field & Picnic Area	Prop K	2/1/2022
165	CIP - Hawwiian-Opp Storm Drain	Stormwater	9/30/2022
166	Sheldon Arleta Park - Arleta Ave. Street Improvement	Prop K	2/1/2022
167	TIWRP- Flaring System Replacement	Wastewater - TPP	12/1/2023
168	Sheldon Arleta Park - Sharp Ave	Prop K	2/1/2022
169	Las Palmas Senior Citizen Center - Renovation	Recreational & Cultural Facilities	9/1/2023
170	LA Street Civic Building	Municipal Facilities Architect	TBD

City of Los Angeles

Department of Public Works

Public Works Infrastructure Stabilization Policy

Project Labor Agreement

2020 - 2030

Department of Public Works

RESOLUTION NO. _____

RESOLUTION ADOPTING A POLICY REGARDING PUBLIC WORKS INFRASTRUCTURE STABLIZATION

WHEREAS, the Department of Public Works continues to lead the way to advance, achieve and maintain the City's vital infrastructure facilities, resources and services through its Capital Improvement Program (CIP) that serve over four million residents covering a geographic area of 465 square miles; and

WHEREAS, the Department of Public Works is responsible for the engineering, design and construction of municipal facilities affecting the public right of way and public properties as well as the maintenance and repair of the City's streets, street lighting systems, medians, embankments, roadways and bridges that provide safety for pedestrians, vehicles and the safe flow of goods and services throughout the City; and

WHEREAS, the Department of Public Works is responsible for the collection, treatment, disposal and recycling of sewage, urban runoff, refuse and household hazardous waste; and

WHEREAS, the Department of Public Works protects the City and public interest by ensuring that all public works projects are constructed and administered in accordance with the plans, specifications, contract provisions, and necessary safety provisions in the project sites; and

WHEREAS, the successful completion of covered projects is also of utmost importance to the Department of Public Works and the general public in the City and as such the Project Labor Agreement will facilitate the prompt, safe and on-time delivery of projects within the Department of Public Works' CIP; and

WHEREAS, the work to be done will require maximum cooperation from the many parties who will be involved to mitigate the negative impact to the public right of way, minimize the disruptions to City residents that affect quality of life and ensure timely completion of public work projects; and

WHEREAS, it is recognized that projects of a certain magnitude with multiple contractors and bargaining units on the job site at the same time over an extended period of time create the potential for work disruption without an overriding commitment to maintain continuity of work; and

WHEREAS, the interests of the general public, the City, the unions, contractors, subcontractors, employers and workers will be best served when construction work proceeds in an orderly manner free of disruption caused by strikes, sympathy strikes, work stoppages, picketing, lockouts, slowdowns or other interferences; and

WHEREAS, the PLA will provide a pool of skilled craft workers to help ensure the delivery of quality and safe projects; and

WHEREAS, the Department of Public Works (DPW) has adopted a departmental Project Labor Agreement (PLA) which will provide construction employment and training opportunities in ways calculated to mitigate the harms caused by geographically concentrated poverty, unemployment and underemployment in concentrated poverty neighborhoods; and

WHEREAS, employment of City residents in high unemployment and/or Concentrated Poverty Neighborhood areas affects the City as a whole and positively impacts the social wellbeing of residents and to that end, the City has taken action to promote City residents receiving employment opportunities at City public work projects; and

WHEREAS, increasing access to employment opportunities with prevailing wages is one way for the City to directly combat poverty and stimulate economic reinvestment; and

WHEREAS, the DPW-PLA is not intended to have an adverse impact on the policy of the City to maximize business opportunities for minority, women and other business enterprises in City contracts; and

WHEREAS, the DPW-PLA reflects a commitment by all parties to the diversity in the workforce hiring that reflect levels of minority, women and other worker utilization at levels which are representative of the relevant workforce of these groups in the Greater Los Angeles Area as determined by the U.S. Census Bureau; and

WHEREAS, the DPW-PLA is in accordance with City policies to ensure discrimination-free, diverse and equitable workforce hiring practices; and

WHEREAS, the DPW-PLA will help advance the skills of the local labor pool, especially the youth, by maximizing opportunities to be indentured into federal- and/or state-certified joint labor/management apprenticeship programs; and

WHEREAS, the Department of Public Works through the PLA, seeks to create career opportunities through apprenticeship participation, retention, and graduation; and

WHEREAS, the Board of Public Works wishes to adopt a policy to promote the above objectives and protect the proprietary interests described above.

NOW, THEREFORE, BE IT RESOLVED BY THE BOARD OF PUBLIC WORKS OF THE CITY OF LOS ANGELES, CALIFORNIA,

AS FOLLOWS:

The Department of Public Works (DPW) adopts the following Public Works Infrastructure Stabilization Policy:

SECTION I. DEFINITIONS

1. "Apprentice" means any worker who is indentured in a bona fide Labor/Management construction apprenticeship program, registered and approved by the State of California Department of Industrial Relations, Division of Apprenticeship Standards (DAS) or in the case of Projects with federal funding, indentured in a bona fide Labor/Management apprenticeship program approved by the US Department of Labor (DOL) and California DAS.

2. "Apprenticeship Program" means any Labor/Management construction apprenticeship program certified and approved by the California DAS or in the case of Projects with federal funding, approved by the US Department of Labor (DOL) and California DAS.

3. "Awarding Authority" means any board or commission of the City, or any employee or officer of the City that is authorized to award or enter into any contract on behalf of the City.

4. "Board" means the City of Los Angeles Board of Public Works.

5. "Bureau of Contract Administration (BCA)" means the designated bureau within the City's DPW responsible for administering this Agreement.

6. "City" means the City of Los Angeles, a municipal corporation, and all City Awarding Authorities.

7. "Construction Contract" means a City contract which has been certified by the City Controller, awarded by the Board, and is necessary to complete the DPW Project.

8. "Contractor/Subcontractor/Employer (C/S/E)" means any individual firm, partnership, owner operator, or corporation, or combination thereof, including joint ventures, which is an independent business enterprise and which has entered into a contract with the DPW or any of its contractors or subcontractors/owner operators of any tier, with respect to the construction of any part of a Covered Project.

9. "Core Worker" means a verifiable member of a C/S/E's core workforce for the purpose of the DPW-PLA and this Policy if the worker's name appears on the C/S/E's active payroll for 60 of 100 working days immediately prior to award of the construction contract and meets all standards required by applicable local, state or federal law or regulation.

10. "Covered Project(s) or Project" means a project or projects which have been included within the Public Infrastructure Program Series (PIPS) and covered by the DPW-PLA or so designated by the Board of Public Works. The Board may identify additional projects that are appropriate for coverage by the DPW-PLA and the Policy by Board resolution.

11. "Craft Request Form" means the document through which a C/S/E shall request workers from the Union and/or Jobs Coordinator, in the form set forth in the DPW-PLA and/or Policy.

12. "Transitional Worker" means an individual whose primary place of residence is within the City of Los Angeles and who prior to commencing work on a Project has been certified as

satisfying at least one of the following criteria: (1) having Veteran status; having a documented history of involvement with the criminal justice system; or being homeless. If the Jobs Coordinator or Employer is not able to identify anyone using criteria (1), criteria (2) may be used. Criteria (2) is an individual that is either a graduate of an LA/OCBTC approved MC3 pre-apprenticeship program or facing two of the following barriers to employment: having a household income less than 50% of the Los Angeles County's median annual household income, receiving public assistance, lacking a GED or high school diploma, being a custodial single parent, suffering from long-term unemployment, being emancipated from the foster care system, or being an apprentice with less than 15% of the apprenticeship hours required to graduate to journey level in a program.

13. "DPW-PLA" means the Project Labor Agreement entered into between the Department of Public Works and Unions, applicable to Covered Projects.

14. "Employment Hiring Plan" (EHP) means a C/S/E's detailed hiring plan in achieving the targeted hiring percentages as described in Article 7 of the DPW-PLA and Policy.

15. "Engineer" means the City Engineer or his/her authorized representative.

16. "FHWA Project" means a DPW Project that is funded in whole or in part by the Federal Highway Administration (FHWA).

17. "Public Infrastructure Program Series List (PIPS) means all projects contained in the adopted PIPS (Attachment E of the DPW-PLA), along with any other projects, as approved by the Board of Public Works, that will operate under the DPW-PLA.

18. "Jobs Coordinator" means the Prime Contractor's designated person, agent or agency that will facilitate the local hire referral process with the C/S/E, Unions and other referral organizations.

19. "LA/OCBTC" (Trades Council) means the Los Angeles /Orange Counties Building and Construction Trades Council.

20. "Letter of Assent" means the document that each C/S/E (of any tier) must sign and submit to the City's Inspector of Public Works, which formally binds them to adherence to all the forms, requirements and conditions of the DPW-PLA and Policy.

21. "Liquidated Damages" means disputed funds withheld from the Prime Contractor until they are found to be in compliance, the contract is terminated, or the Covered Project is completed.

22. "Local Resident" means an individual whose primary residence is within Tier 1 or 2 zip code areas. The following are acceptable forms of proof of residency: (i) Copy of a current residential lease with the eligible household member's name listed on it; or (ii) Valid driver's license or State ID card with a City of Los Angeles address; or (iii) Medical card with current address; or (iv) Utility bill with eligible household member's name on it; or (v) Voter's registration card; or (vi) Other proof of residence address deemed acceptable by BCA.

23. “Long-Term Unemployment” as defined by the Bureau of Labor Statistics means being jobless for 27 weeks or more, or as defined.

24. “Policy” means the DPW Public Works Infrastructure Stabilization Policy.

25. “Project Work” means construction work performed as part of a Covered Project.

26. “Prime Contractor” means any individual firm, partnership, owner-operator, or corporation, or combination thereof, including joint-ventures, that is an independent business enterprise and that has entered into a Construction Contract.

27. “Reporting Period” means the BCA’s indicated reporting period for measuring the targeted hiring efforts of the C/S/E(s). These reporting periods shall be at the BCA’s determination of 10%, 30%, 50%, 70% and 90% construction completion phases.

28. “Tier 1” means the zip codes within the City, identified in Article 7.4 of the DPW-PLA, having at least 2 census tracts (or portion thereof) in which the median household income is less than 50% of the County of Los Angeles’ median annual household income, and/or where the unemployment rate exceeds 200% of the County of Los Angeles’ unemployment rate as reported by the most recent available U.S. Census Bureau data.

29. “Tier 2” means zip codes within the City, identified in Article 7.5 of the DPW-PLA, having at least 2 census tracts (or portion thereof) in which the median household income is less than the County of Los Angeles’ median annual household income, and/or where the unemployment rate exceeds 100% of the County of Los Angeles’ unemployment rate as reported by the most recent U.S. Census Bureau data.

30. “Underemployment” means a situation in which a worker (i) is employed only part-time when one needs and desires full-time employment, and/or (ii) is inadequately employed at a low-paying job that requires less skill or training than one possesses.

31. “Unemployment” means, in accordance with the Bureau of Labor Statistics definition, a situation in which a person does not have a job, has actively looked for work in the prior 4 weeks, and is currently available for work and chronic Unemployment means unemployment lasting 27 weeks or longer.

32. “Union(s)” or “Signatory Unions” means the Los Angeles/Orange Counties Building and Construction Trades Council affiliated with the Building & Construction Trades Department (AFL/CIO) Craft International Unions or any other craft labor organization signatory to the DPW-PLA, acting in their own behalf and on behalf of their respective affiliates and member organizations whose names are subscribed in the DPW-PLA and who have through their officers executed the DPW-PLA.

SECTION II. COVERAGE OF PROJECTS

1. Covered Projects: Except as provided otherwise herein, this Policy applies to all projects contained in the Public Infrastructure Programs Series List, awarded by the Board, and covered by the DPW-PLA. The Board may designate additional projects for coverage under the Policy and DPW-PLA based on specific findings that coverage will advance the City's legitimate proprietary and policy interests and promote the public interest in assuring completion of the project in question in a safe and cost-effective manner while minimizing or negating any adverse impact to the public welfare.

2. FHWA Projects: In the event that DPW determines that a project to which this Policy applies is an FHWA project, DPW shall modify or not enforce any aspect of the Policy or DPW-PLA in accordance with a valid and binding instruction from the U.S. Department of Transportation.

SECTION III. IMPLEMENTATION

Prior to bid, DPW staff shall review each Covered Project's bid specifications to ensure the following provisions are incorporated:

1. That the Request for Bid Package Authorization from the Board specifies that the Covered Project contains the DPW-PLA and Policy;

2. That the Bid specifications require all contractors submitting bids or proposals agree to the terms of the DPW-PLA and Policy;

3. That a provision exists in the prime contract obligating the Prime Contractor and all its C/S/Es (of any tier) to comply with the terms of the DPW-PLA and Policy and/or require compliance with the DPW-PLA and Policy terms through a Letter of Assent or any other form or legally enforceable obligation to the City.

4. That the Construction Contract shall include provisions establishing liquidated damages amounts as described in Section VIII of this Policy.

SECTION IV. EXCLUSIONS AND/OR MODIFICATIONS

1. Funding Source: this Policy shall not apply to DPW construction contracts or projects, if the funding source has established provisions or rules that forbid the inclusion of a PLA and/or Local Hire provision. If the project is listed as part of the PIPS, DPW staff must present the reason(s) to the Board prior to final determination to exclude the Covered Project.

2. This Policy shall not apply to work performed by a C/S/E's executives, managerial employees, engineering employees, supervisors (except those covered by State or Federal Prevailing Wage rates and/or Schedule A collective bargaining agreements), office and clerical employees, or any other employee not performing construction craftwork.

3. Out-of-State Workers: hours worked by residents of states other than California shall not be included in calculation of total hours of project work for purposes of determining compliance with the Section 5 below.

SECTION V. TARGETED HIRING

1. Requirements for Covered Projects:

   The Prime Contractor shall ensure that the following targeted hiring requirements are met for each Covered Project:

   a) At least 30% of total hours worked on each project shall be performed by Local Residents. For any hour of Project Work for which a C/S/E seeks to meet this 30% requirement, the C/S/E, Unions and the Jobs Coordinator must first refer individuals whose primary place of residence is within a Tier 1 zip code. After Unions, C/S/Es and the Jobs Coordinator have exhausted the available pool of Local Residents whose primary place of residence is within a Tier 1 zip code, they may refer Local Residents whose primary place of residence is within a Tier 2 zip code.

   b) Apprentices must be employed on each project in accordance with the requirements mandated by Section 1777.5 of the California Labor Code. The hours performed by apprentices in each individual craft shall not exceed the ratio to journeyperson established by the applicable craft union's State DAS approved apprenticeship standards. A minimum of 50% of all apprentice hours shall be performed by Local Residents.

   c) At least 10% of total hours worked on each project shall be performed by Transitional Workers residing within Tier 1 or Tier 2 zip code areas described in Articles 7.4 and 7.5 of the DPW-PLA respectively and the remaining zip codes within the City of Los Angeles. Hours of project work performed by Transitional Workers may be applied towards the 30% requirement of the DPW-PLA and/or this Policy. Additionally, apprentice work hours performed by Transitional Workers may be applied towards the 50% local apprentice requirement of the DPW-PLA.

SECTION VI. RESPONSIBILITIES OF BCA, C/S/Es, UNIONS, and JOBS COORDINATOR

1. BCA Responsibilities:

   a) Monitor and enforce the targeted hiring measures of the DPW-PLA and Policy and issue Notices of Non-Compliance where appropriate.

   b) Review, approve or disapprove submitted Employment Hiring Plans prior to a C/S/E(s)' estimated start of work. Approval of a C/S/E to work on a Covered Project is contingent on the C/S/E(s)' submittal of an approved EHP plan.

c) Ensure, prior to a C/S/E's approval to work on a Covered Project, its submittal of a duly signed Letter of Assent.

d) Ensure targeted hiring dashboards for Covered Projects on the BCA website (http://bca.lacity.org/pla_documents) are accurate and reflective of the most recent data received from C/S/E(s) and Jobs Coordinators.

e) Conduct timely Reporting Period Meetings for Covered Projects with C/S/E(s) and Jobs Coordinators.

f) Report to the Board on a quarterly basis the status of all Covered Projects, or as otherwise directed by the Board.

g) Determine the withhold amount from payment(s) as disputed funds and make recommendation(s) for assessment of Liquidated Damages.

2. Prime Contractor and C/S/Es:

a) Employment Hiring Plan (EHP): Prime Contractor shall ensure that its C/S/Es (of any tier), at least 20 business days prior to starting their work on the Covered Project, shall submit their plan(s) to the BCA for approval by the BCA Director or his/her designee. Each C/S/E shall also complete an EHP Acknowledgement that describes how it will meet the targeted hiring requirements set forth in the DPW-PLA and Policy. No C/S/E (of any tier) shall be approved to work on a Covered Project without an approved EHP.

b) PLA and Policy: Prime Contractor shall ensure that its C/S/Es (of any tier), prior to start of work, (i) read and understand the requirements of the DPW-PLA and Policy; (ii) submit their Employment Hiring Plans at least 20 business days prior to their subcontractors' start of work and (iii) sign and submit their Letters of Assent prior to start of work. No C/S/E (of any tier) shall be approved to work on a Covered Project without having submitted a signed Letter of Assent.

c) Prior to start of work on the project, the Prime Contractor shall:

- Recommend a Jobs Coordinator for approval by the BCA.
- Upon BCA's approval of its Jobs Coordinator, notify its subcontractors (of any tier) who the Jobs Coordinator is.
- Provide within 10-calendar days upon request by the BCA or its designated representative, documentation of their Jobs Coordinator's qualifications.

d) The Prime Contractor and its C/S/Es (of any tier) shall coordinate with the Jobs Coordinator for services to support their efforts in meeting the targeted hiring percentages as described in Article 7 of the DPW-PLA and the Policy.

e) Pre-Job Conference: The Prime Contractor and its C/S/Es (of any tier), prior to start of work, shall hold a pre-job conference. The purpose of the pre-job conference is to determine craft personnel needs, schedule of work for the contract and all other matters as described in the DPW-PLA and the Policy. All work assignments shall be disclosed by the Prime Contractor and/or C/S/Es (of any tier) at the pre-job

conference. Any formal jurisdictional dispute(s) raised under Article 14 of the DPW-PLA must be raised at the pre-job conference upon disclosure of the work assignments. If the Prime Contractor and/or C/S/Es intend to change the work assignment after the pre-job conference or to make an assignment of work not previously known, the Prime Contractor and/or C/S/Es must notify the appropriate affected craft union(s) prior to the commencement of work.

f) Craft Request Form: The Prime Contractor and its C/S/Es (of any tier) shall only use the Craft Request Form (Attachment "C" of the DPW-PLA) and the procedures written therein to request workers from the affected Union(s). All C/S/Es must transmit a concurrent Craft Request transmittal of such request to the Jobs Coordinator.

g) The Prime Contractor and its C/S/Es (of any tier) must satisfactorily document their contact with the Jobs Coordinator when the Unions have not been able to refer a Local Resident and/or Transitional Worker within the 48-hour window of referral.

h) The Prime Contractor and its C/S/Es (of any tier) shall maintain proof of transmittal of the Craft Request forms to the Union hiring halls and Jobs Coordinator. Upon request by the BCA or its designated representative, copies shall be provided within 10-calendar days of request.

i) The Prime Contractor and its C/S/Es (of any tier) shall make available to the BCA or its designated representatives records and information that are deemed relevant to monitoring and enforcement of the provisions of the DPW-PLA and the Policy.

j) The Prime Contractor and its C/S/Es (of any tier) shall cooperate fully and promptly with any inquiry or investigation the BCA or its designated representatives deem necessary in order to monitor compliance with the provisions of the DPW-PLA and the Policy.

k) The Prime Contractor and its C/S/Es (of any tier), within 60 calendar days after concluding work on the Covered Project, shall submit to the BCA a verified statement of the number of journeypersons and apprentices who worked on the project, their classifications and the hours worked. (Per California Labor Code 1777.5(e).)

Upon request of the BCA or its designated representatives, the Prime Contractor and its C/S/Es (of any tier) must provide documentation of their Local Resident, Apprentice and Transitional Workers targeted hiring participation level efforts within 10-calendar days of the request for documentation.

3. Union Responsibilities:

a) Ensure that its dispatchers properly adhere to the use of the Craft Request Form and the procedures written therein.

b) Refer Local Residents and/or Transitional Workers requested through the Craft Request Form, regardless of their place on the hiring hall list and normal referral procedures.

c) Exert their best efforts to recruit and identify Local Residents residing in Tier 1, and then Tier 2 zip code areas, as well as those referred by the Jobs Coordinator for entrance, indentureship into a union apprenticeship program, and assisting such individuals in graduating into eligible journeypersons.

d) Upon receiving a request from a C/S/E for a Local Resident, exhaust the available list of individuals residing the Tier 1 zip codes before referring an individual residing in the Tier 2 zip codes.

e) Track retention of Local Residents and/or Transitional Worker apprentices participating in joint Labor/Management apprenticeship programs and provide BCA with the necessary information as requested.

4. Jobs Coordinator:

a) Criteria for Selecting a Jobs Coordinator: The Jobs Coordinator plays an integral part in the success of its partners in obtaining the targeted hiring percentages. It is the responsibility of the Prime Contractor to designate a Jobs Coordinator possessing, but not limited to, the following demonstrable experience and qualifications:

i. Developing, creating, designing and marketing specific programs targeting Local Residents and/or Transitional Workers for construction opportunities at the Covered Project (e.g. handouts and fliers for "walk-ins" demonstrating program entrance procedures).

ii. Coordinating services for contractors to assist in their local worker, transitional worker and apprentice utilization.

iii. Educating and assisting contractors on incentives provided by State or federal programs for On-the-Job Training and employer tax credits.

iv. Conducting orientations, job fairs and community outreach meetings to the local community.

v. Providing supportive services such as skills training, child care, transportation, education remediation, assistance with union fees and tools.

vi. Screening and certifying the transitional (formerly known as disadvantaged) status of workers.

vii. Establishing a referral and retention tracking mechanism for placed local and/or transitional workers and apprentices.

viii. Networking with the various Work Source Centers, community and faith based organizations and other non-profit entities that provide qualified local workers and/or transitional workers.

ix. Liaising with the various building trades crafts for referral and placement of local hire and/or transitional workers.

b) Jobs Coordinator Affirmation. While not mandatory, it is strongly suggested that each covered project employ a Jobs Coordinator.

i. The BCA will affirm the Jobs Coordinator on an individual project basis, utilizing its existing Jobs Coordinator review process.

ii. The review process consists of BCA reviewing the Jobs Coordinator's requisite experience and qualifications to assist the DPW-PLA's covered project to meet, if not exceed the targeted hiring requirements.

c) Jobs Coordinator Responsibilities. On each covered project in which they are employed, the Jobs Coordinator shall:

i. Coordinate the covered project's local hire referral process with the C/S/Es, Unions, City Work Source Centers, Faith and Community Based Organizations, and other organizations that can provide qualified local hire referrals.

ii. Coordinate the covered project's overall hiring process with all C/S/Es to help ensure that no PLA hiring and referral violations occur and the targeted hiring requirement percentages remain in compliance.

iii. Certify any Transitional Worker's status and maintain written proof of that certification for the duration of the covered project.

iv. Maintain a database of pre-qualified local residents for referral to work on a Covered Project and/or indentureship into a bona fide Labor/Management apprenticeship program.

v. Facilitate relationships among approved MC3 pre-apprenticeship and apprenticeship programs and the C/S/Es' to enable prompt referral.

vi. Be the point of contact to provide information about available job opportunities.

vii. Educate and provide financial incentives information to the C/S/Es' who hire eligible workers under Work Opportunity Tax Credit (WOTC) and On-the-Job Training (OJT) and other benefits for which a C/S/E may be eligible based on their implementation of the Local Hire requirements.

viii. Coordinate the C/S/Es' local hire effort documentations and other reports as it relates to their Local Resident and/or Transitional Worker targeted hiring requirements.

ix. Work closely with BCA staff, the building trades and C/S/Es in achieving the targeted hiring.

x. Attend all mandatory DPW-PLA related meetings, including, but not limited to Pre-Bid Conferences, Quarterly Jobs Coordinator meetings and Reporting Period Meetings. Jobs Coordinators will be individually notified when any scheduled meeting has been designated as mandatory.

Parties with responsibilities under the DPW-PLA and/or Policy, shall maintain those responsibilities regardless of the performance of the Jobs Coordinator at the tasks described in the DPW-PLA and the Policy.

SECTION VII. COMPLIANCE

The BCA or its authorized representatives shall determine whether a Prime Contractor and its C/S/Es have complied with the requirements of the DPW-PLA and the Policy. The Prime Contractor is ultimately responsible for it and its C/S/Es (of any tier) compliance with the DPW-PLA and Policy requirements.

1. If, after taking into account all hours of project work performed up to that point in time of the Reporting Period, the targeted hiring requirements of the DPW-PLA and Policy have been satisfied for a Covered Project, then the Prime Contractor and its subcontractors (of any tier) working on that Covered Project shall be deemed to be in compliance.

2. If the targeted hiring requirements of the DPW-PLA and the Policy have not been satisfied for a Covered Project, the Prime Contractor nonetheless may be deemed to be in compliance if it demonstrates both (a) that it and each of its C/S/Es (of any tier) have complied with all other requirements of the DPW-PLA and the Policy, and (b) that it and each C/S/E (of any tier) have either (i) satisfied the targeted hiring requirements of the DPW-PLA and this Policy with regard to the project work that it has performed or (ii) satisfactorily demonstrated the following:

    a) Adherence to procedures contained in its Employment Hiring Plan as approved by the BCA.

    b) Requests to Unions, through Craft Request Forms, of sufficient numbers of Local Residents and Transitional Workers.

    c) Documented contact with the Jobs Coordinator in each instance when the relevant Union did not refer qualified Local Residents or Transitional Workers within the 48 hours following the C/S/E's request and the C/S/E's fair consideration of any Local Resident or Transitional Worker subsequently referred by the Jobs Coordinator.

    d) Accurate records documenting the C/S/E's compliance efforts that include (but not limited to):
        i. A listing by name and address of all local recruitment sources contacted by the C/S/E;

        ii. The date of the local recruitment contact and the identity of the person contacted, the trade and classification and number of hire referrals requested;

iii. The number of Local Residents and/or Transitional Workers hires made as a result of the contact;

iv. The identity and address of the worker(s) hired pursuant to the contact;

v. Documentation when a referral was not hired (reason for non-hire) and/or premature termination.

3. Any Covered Project that fully satisfies the terms and conditions of this section will be deemed to have complied with the PLA's Targeted Hiring Requirements and will not be subject to Liquidated Damages. Furthermore, the employed Jobs Coordinator's Affirmation status will not be affected.

SECTION VIII. ENFORCEMENT

The Prime Contractor for every Covered Project agrees:

1. To be liable to the City for Liquidated Damages as provided in this section;

2. That the Prime Contractor and its C/S/Es (of any tier) commitment to comply with the targeted hiring requirements of DPW-PLA and Policy is a material element of the Covered Project;

3. That the failure of the Prime Contractor and its C/S/Es (of any tier) to comply with the targeted hiring requirements will cause harm to the City and the public which is significant and substantial but extremely difficult to quantify. The harm to the City includes the difficult-to-quantify harm that the community and its families suffer as a result of high unemployment and concentrated poverty;

4. Liquidated Damages: Due to the difficulty of estimation of damages for violation(s) of requirements of this Policy, Construction Contracts shall have provisions establishing liquidated damage to be assessed as follows:

   a) The Prime Contractor shall pay liquidated damages equal to the average journeyperson project wage for each hour the Covered Project fell short of the targeted hiring, or $500 per day, whichever is greater.

   b) If the Covered Project's targeted hiring requirements are out of compliance during any Reporting Period, the Prime Contractor shall meet with the BCA to develop a plan for compliance. The Prime Contractor has until the next Reporting Period to effectuate compliance or Liquidated Damages shall be withheld.

   c) Before Liquidated Damages are sought, the Prime Contractor shall be notified of the proposed Liquidated Damages and served with a summary of the information upon which the Liquidated Damages are based.

   d) Liquidated Damages shall be withheld from all subsequent monthly progress payment request(s) as disputed funds until such time as Prime Contractor is found

to be in compliance, the Covered Project contract is terminated, or the Covered Project is completed.

e) Should the Covered Project be terminated or completed before the Prime Contractor is found to be in compliance, recommendation shall be made to the Board to assess Liquidated Damages and the amount of the Liquidated Damages shall be returned to the fund from whence they came.

5. Liquidated Damages Appeal:

   a) The Prime Contractor may appeal the assessment of Liquidated Damages before the Board. Prior to the Board hearing to address assessment of Liquidated Damages, the Prime Contractor shall be provided a summary of the information upon which the recommendation assessment is based.

   b) The Prime Contractor must request an appeal in writing within 10-calendar days of receipt of the Liquidated Damages assessment summary. At the Board hearing to determine assessment of Liquidated Damages, the Prime Contractor will be allowed to provide evidence that it has made all of the showings required under Section VII of the Policy. Failure to submit a written request for an appeal within the time frame stipulated in this Section will be deemed a waiver of the right to appeal and the recommendation for assessment of Liquidated Damages will be implemented.

6. Termination of Contract(s): Consistent, substantial violations of the DPW-PLA and/or Policy by any Prime Contractor and/or C/S/E may result in a recommendation to the Board that the contract of the offending Prime Contractor and/or C/S/E be terminated per Section 00405 of the Master General Conditions.

SECTION IX. APPLICABLE LAW AND SEVERABILITY

The provisions of this Policy shall not be applicable where prohibited by federal or state law, or where the application would violate or be inconsistent with the terms and conditions of a grant or a contract with an agency of the United States or the State of California, or the valid instructions of an authorized representative of any of these agencies with respect to any grant or contract. If enforcement of any provision of this Policy is enjoined by a court of competent jurisdiction, the remaining provisions shall remain in full force and effect.